Apollo Lunar Surface Experiments Package

ALSEP Familiarization Course
Handout

For Training Purposes Only

1 May 1969
Contract NAS9-5829

BSR 2264-B

Prepared for
MANNED SPACECRAFT CENTER
HOUSTON, TEXAS

by

Bendix Aerospace Systems Division

TABLE OF CONTENTS

LESSON

1. BACKGROUND & OBJECTIVES
   - SYSTEM OBJECTIVES 1.1
   - EXPERIMENT OBJECTIVES 1.7
2. SYSTEM REQUIREMENTS & CONSTRAINTS
   - INSTALLATION & PRELAUNCH 2.1
   - LAUNCH, FLIGHT & LANDING 2.10
   - LUNAR SURFACE 2.11
   - DATA TRANSMISSION & RECEPTION 2.17
   - GENERAL DESIGN CRITERIA 2.24
3. SYSTEM LEVEL DESCRIPTION
   - SYSTEM OVERVIEW 3.1
   - SUPPORTING SUBSYSTEMS 3.6
   - EXPERIMENT SUBSYSTEMS 3.26
   - WEIGHT, POWER, & DATA SUMMARY 3.48
4. ALSEP OPERATIONS
   - PRELAUNCH 4.1
   - LUNAR SURFACE 4.7
   - LUNAR MISSION PHASE 4.27
   - FORTY-FIVE DAY PHASE 4.33
   - ONE-YEAR PHASE 4.34
5. STRUCTURE/THERMAL SUBSYSTEM
   - COMPONENTS & FUNCTION 5.1
   - DEPLOYMENT 5.12
   - COMMANDS & DATA 5.15
6. ELECTRICAL POWER SUBSYSTEM
   - RTG 6.1
   - CREW ACTIVITIES 6.7
   - PCU 6.9
   - COMMANDS & TM DATA 6.17
7. DATA SUBSYSTEM
   - GENERAL 7.1
   - UPLINK COMPONENTS 7.9
   - DOWNLINK COMPONENTS 7.45
   - MISCELLANEOUS 7.94
8. PASSIVE SEISMIC EXPERIMENT SUBSYSTEM
   - COMPONENTS & FUNCTION 8.1
   - DEPLOYMENT 8.11
   - COMMANDS & DATA 8.14
9. ACTIVE SEISMIC EXPERIMENT SUBSYSTEM
   - COMPONENTS & FUNCTION 9.1
   - DEPLOYMENT 9.18
   - COMMANDS & DATA 9.21
10. LUNAR SURFACE MAGNETOMETER SUBSYSTEM
    - COMPONENTS & FUNCTION 10.1
    - COMMANDS & DATA 10.33
    - DEPLOYMENT 10.35
11. SOLAR WIND SPECTROMETER SUBSYSTEM
    - COMPONENTS & FUNCTION 11.1
    - DEPLOYMENT 11.12
    - COMMANDS & DATA 11.16
12. SUPRATHERMAL ION DETECTOR EXPERIMENT SUBSYSTEM
    - COMPONENTS & FUNCTION 12.1
    - DEPLOYMENT 12.20
    - COMMANDS & DATA 12.23
13. HEAT FLOW EXPERIMENT SUBSYSTEM
    - COMPONENTS & FUNCTION 13.1
    - COMMANDS & DATA 13.6
    - DEPLOYMENT 13.19
    - ALSD 13.25
14. CHARGED - PARTICLE LUNAR ENVIRONMENT EXPERIMENT SUBSYSTEM
    - COMPONENTS & FUNCTION 14.1
    - DEPLOYMENT 14.10
    - COMMANDS & DATA 14.13
15. COLD CATHODE GAUGE EXPERIMENT
    - COMPONENTS & FUNCTION 15.1
    - DEPLOYMENT 15.10
    - COMMANDS & DATA 15.11
16. MSFN/MCC OPERATIONS
    - CMD & TM PROCESSING 16.1
    - SOFTWARE & DISPLAYS 16.4
    - SPECIAL REQUIREMENTS 16.7
    - DETAILED MONITORING 16.9

ABBREVIATIONS A

APOLLO LUNAR SURFACE EXPERIMENTS PACKAGE

- SYSTEM OBJECTIVES
  - BACKGROUND
    - EXPERIMENT SELECTION
      - ORGANIZATION

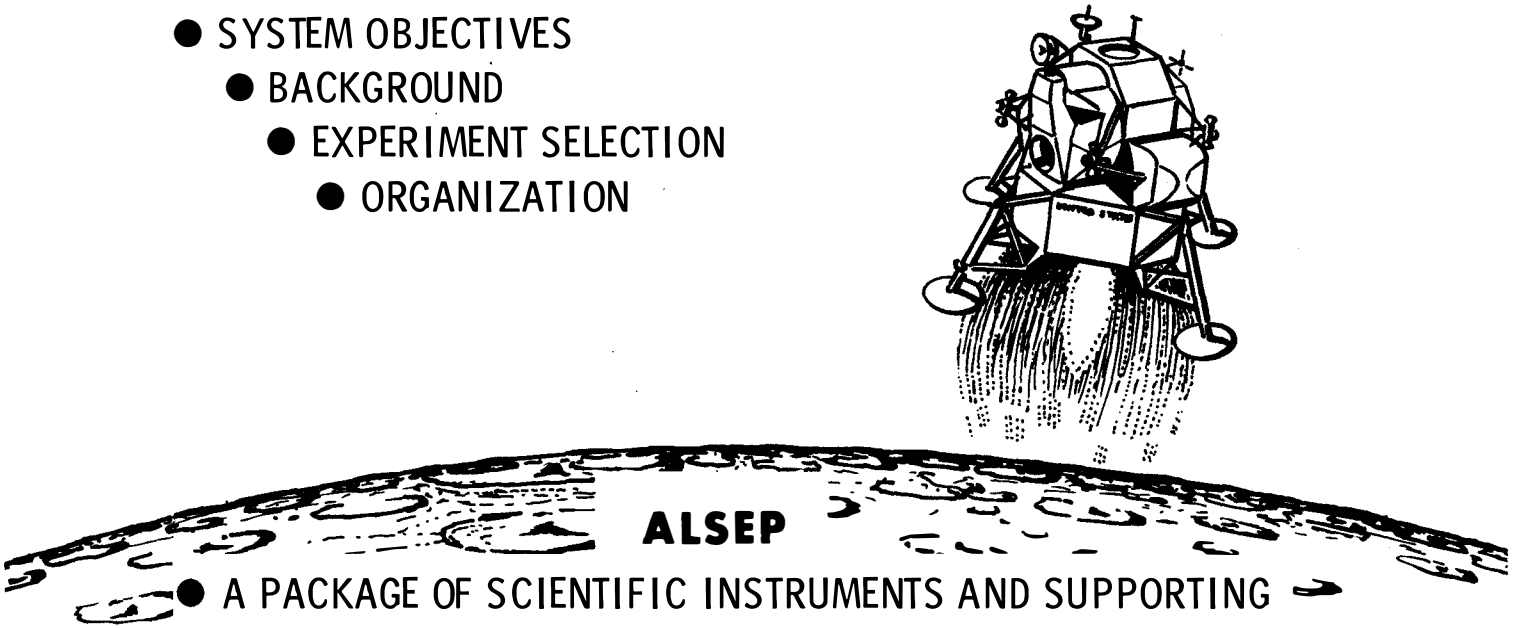

- A PACKAGE OF SCIENTIFIC INSTRUMENTS AND SUPPORTING SUBSYSTEMS FOR USE ON THE LUNAR SURFACE
- CARRIED ON APOLLO, DEPLOYED BY ASTRONAUT
- ONE YEAR CONTINUOUS OPERATION (2 YEAR MAXIMUM)

OCT 67 5178.1.1

ALSEP SYSTEM OBJECTIVES

DETERMINE LUNAR CHARACTERISTICS

- INTERNAL STRUCTURE & COMPOSITION
- STATE OF INTERIOR
- COMPOSITION OF ATMOSPHERE
- GENESIS OF SURFACE FEATURES

THIS LUNAR INFORMATION WILL PROVIDE NEW INSIGHTS INTO THE GEOLOGY & GEOPHYSICS OF THE EARTH.

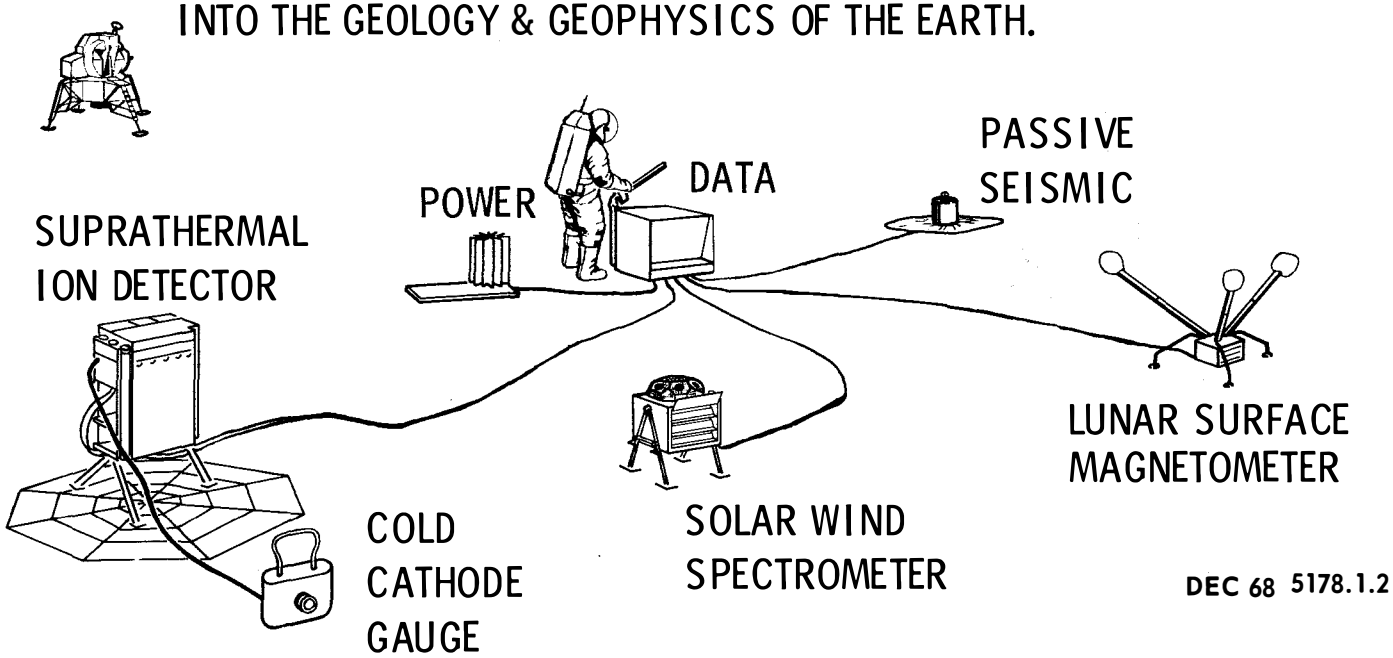

DEC 68 5178.1.2

ALSEP EXPERIMENTS

NASA NO.	EXPERIMENT	PRINCIPAL INVESTIGATOR
S031	PASSIVE SEISMIC	DR. G.V. LATHAM, COLUMBIA
S033	ACTIVE SEISMIC	DR. R.L. KOVACH, STANFORD
S034	MAGNETOMETER	DR. C.P. SONNETT, ARC
S035	SOLAR WIND	DR. C.W. SNYDER, JPL
S036	SUPRATHERMAL ION	DR. J.W. FREEMAN, RICE
S037	HEAT FLOW	DR. M.G. LANGSETH, COLUMBIA
S038	CHARGED - PARTICLE	DR. B.J. O'BRIEN, RICE
S058	COLD CATHODE GAUGE*	DR. F.S. JOHNSON, SCAS
S059	LUNAR FIELD GEOLOGY**	DR. E.M. SHOEMAKER, USGS

* INCLUDED IN SUPRATHERMAL ION ON CERTAIN FLIGHTS

** EQUIP PARTIALLY CARRIED BY ALSEP

MAY 69 5178.1.3

ALSEP HARDWARE DEFINITIONS

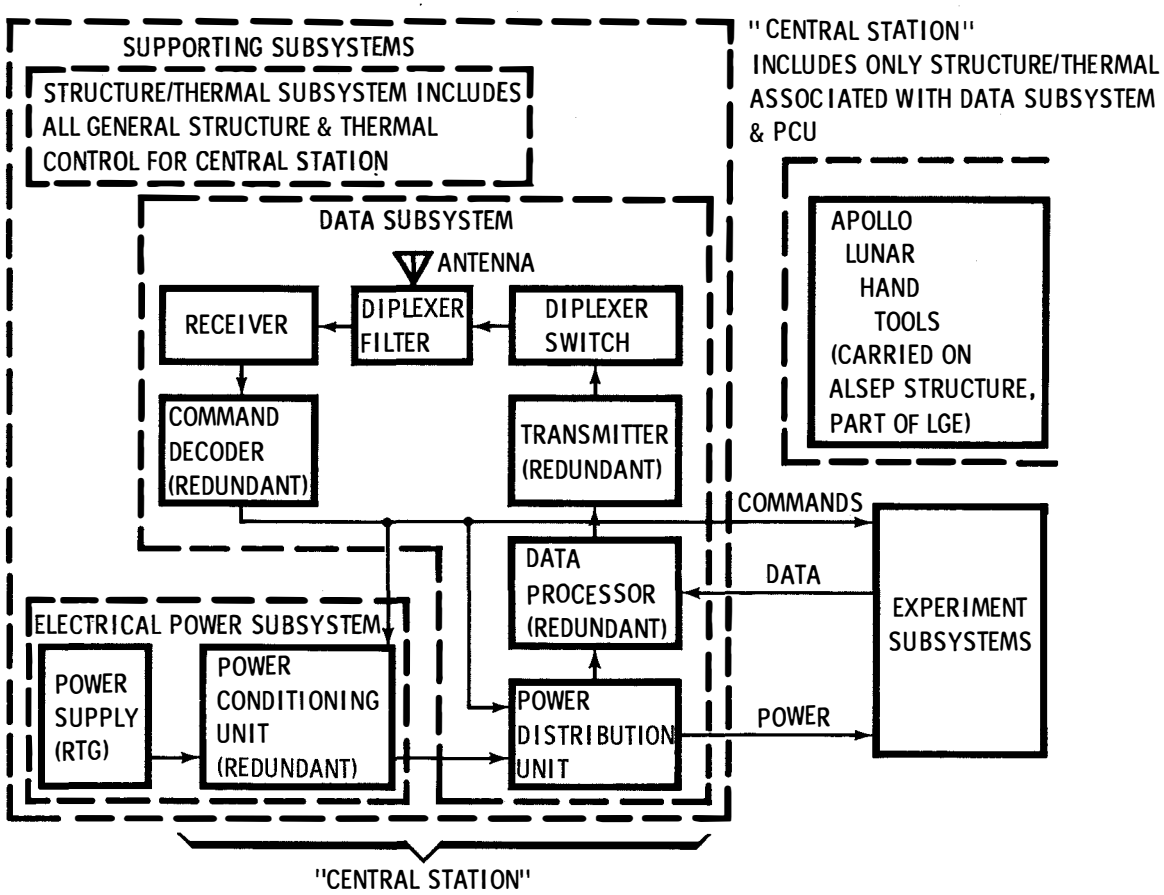

MAY 69 5178.1.4

ALSEP FLIGHT ASSIGNMENTS

- TO BE CARRIED ON EARLY APOLLO FLIGHTS
- THREE FLIGHT ARTICLES
- ALL 7 EXPERIMENTS CANNOT BE CARRIED SIMULTANEOUSLY

EXPERIMENT	ABBR	ALSEP NUMBER		
		1	3	4
PASSIVE SEISMIC	PSE	X	X	X
ACTIVE SEISMIC	ASE			X
MAGNETOMETER	LSM	X		
SOLAR WIND	SWS	X		
SUPRATHERMAL ION	SIDE	X		X
HEAT FLOW	HFE		X	
CHARGED-PARTICLE	CPLEE		X	X
COLD CATHODE GAUGE*	CCIG		X	

* INCLUDED IN SUPRATHERMAL ION ON OTHER FLIGHTS

ALL CONFIGURATIONS HAVE SIMILAR POWER AND DATA SUBSYSTEMS

APR 69 5178.1.5

ALSEP ORGANIZATION

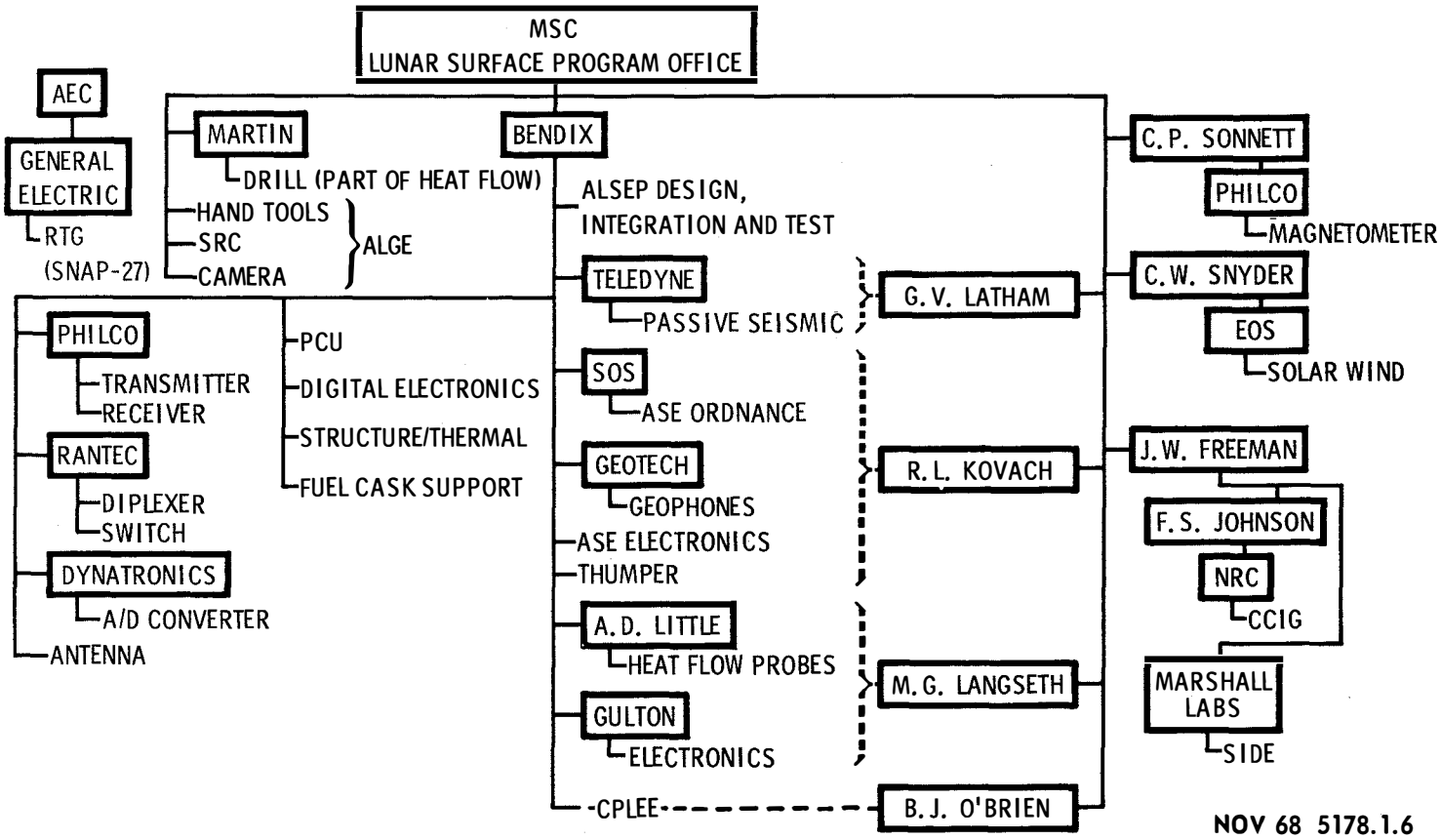

LUNAR FIELD GEOLOGY
NASA No. SO59

OBJECTIVE: PHYSICAL PROPERTIES; e.g., DENSITY, CHEMICAL COMPOSITION, DIELECTRIC CONSTANT, ELECTRICAL CONDUCTIVITY, MAGNETIC SUSCEPTIBILITY, ALBEDO, COSMIC RAY HISTORY.

MEASUREMENT: IN SITU EXAMINATION, RETURN SAMPLES

EQUIPMENT: ASCENT STAGE - SAMPLE RETURN CONTAINERS, CAMERA
DESCENT STAGE - APOLLO LUNAR HAND TOOLS (ALHT)
CARRIED ON ALSEP BUT NOT A PART OF THE ALSEP MISSION

ALHT

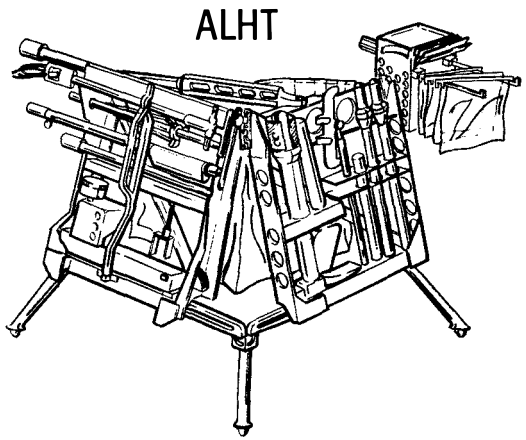

TOOL CARRIER
SAMPLING HAMMER
BRUSH
SCOOP
WEIGHING SCALE
SAMPLE COLLECTION BAGS
ETC.

APR 69 5178.1.7

ALSEP EXPERIMENT OBJECTIVES

EXPERIMENTS	OBJECTIVES: INTERNAL STRUCTURE & COMPOSITION	STATE OF INTERIOR	COMPOSITION OF ATMOSPHERE	GENESIS OF SURFACE FEATURES
PASSIVE SEISMIC	X	X		X
ACTIVE SEISMIC	X			X
MAGNETOMETER	X	X		X
SOLAR WIND	X		X	X
SUPRATHERMAL ION		X	X	X
HEAT FLOW	X	X		X
CHARGED - PARTICLE			X	
COLD CATHODE ION GAUGE			X	

APR 69 5178.1.8

PASSIVE SEISMIC
NASA No. SO31

OBJECTIVE: INTERNAL SEISMIC ENERGY & STRAIN REGIME, OVERALL PHYSICAL PROPERTIES (CORE/MANTLE, etc.), DISTANCE & DIRECTION TO EPICENTERS FOR CORRELATION WITH SURFACE FEATURES.

MEASUREMENT: NATURAL SEISMIC WAVE VELOCITY, FREQUENCY, AMPLITUDE & ATTENUATION; FREE OSCILLATIONS & TIDAL DEFORMATIONS

EQUIPMENT: ONE VERTICAL SHORT - PERIOD ELEMENT, THREE ORTHOGONAL LONG-PERIOD ELEMENTS

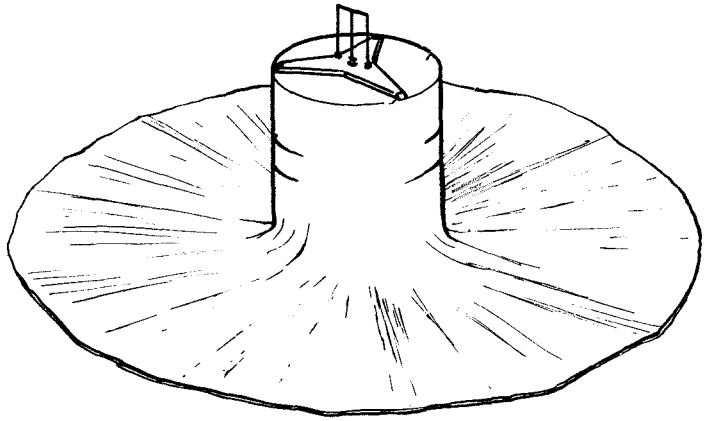

APR 69 5178.1.9

ACTIVE SEISMIC
NASA No. SO33

OBJECTIVE: PHYSICAL PROPERTIES TO SHALLOW DEPTHS, FORMATION PROCESSES

MEASUREMENT: ARTIFICIAL SEISMIC WAVE VELOCITY, FREQUENCY, & ATTENUATION

EQUIPMENT: ENERGY SOURCES (THUMPER & GRENADES), DETECTION EQUIPMENT (GEOPHONES & AMPLIFIERS)

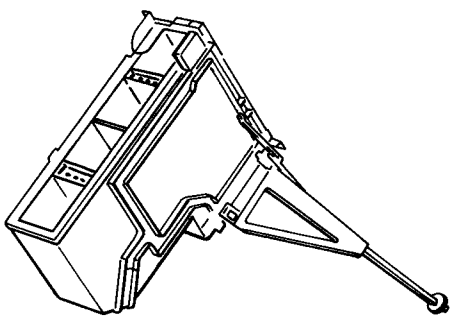

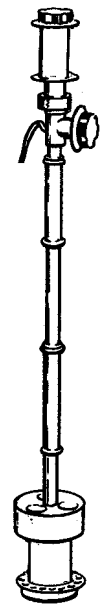

APR 69 5178.1.10

LUNAR SURFACE MAGNETOMETER

NASA No. SO34

OBJECTIVE: MOON'S FIELD - SOLAR WIND, GROSS ELECTRICAL DIFFUSIVITY, EXISTENCE OF MOLTEN CORE, EARTH'S TURBULENT WAKE, LOCAL MAGNETIC ANOMALIES

MEASUREMENT: MAGNETIC FIELD VECTOR & ITS VARIATION WITH TIME; FIELD GRADIENT

EQUIPMENT: THREE
FLUX-GATE SENSORS
ON ORTHOGONAL
3 - FT BOOMS

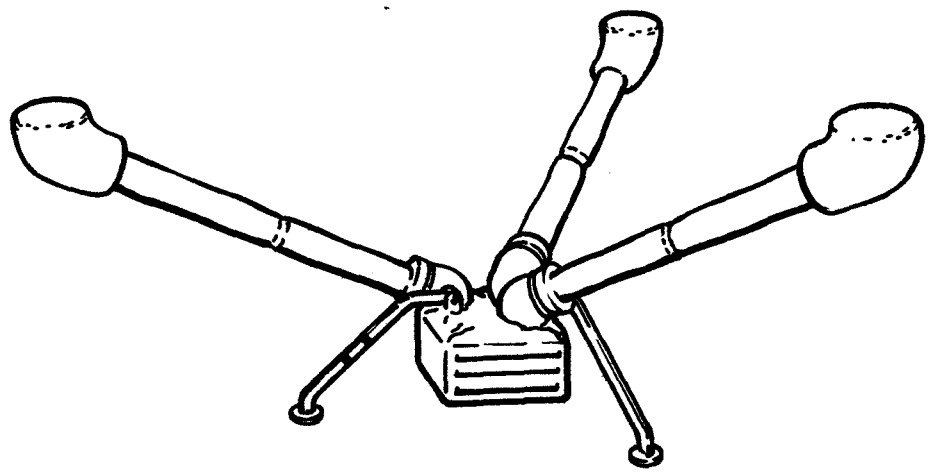

DEC 68 5178.1.11

SOLAR WIND SPECTROMETER
NASA No. SO35

OBJECTIVE: SOLAR WIND - MOON, RADIATION EFFECTS ON SURFACE THROUGH SPUTTERING & CHARGING, PRESENCE OF ATMOSPHERE, GROSS ELECTRICAL CONDUCTIVITY, EARTH'S TURBULENT WAKE

MEASUREMENT: POSITIVE ION & ELECTRON FLUX VARIATIONS WITH ENERGY, TIME, & DIRECTION

EQUIPMENT: SEVEN SENSORS COVERING 2π STERADIANS

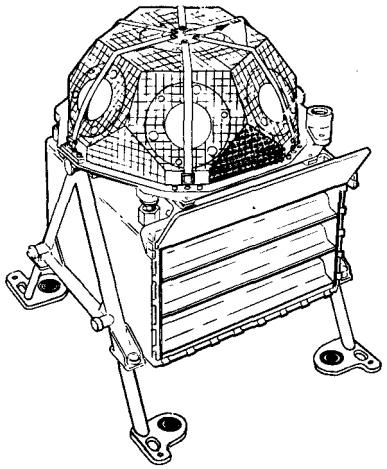

DEC 68 5178.1.12

SUPRATHERMAL ION DETECTOR
NASA No. SO36

OBJECTIVE: IONOSPHERE/ATMOSPHERE CHARACTERISTICS, POSSIBILITY OF VOLCANIC PROCESSES, AMBIENT ELECTRIC FIELD EFFECTS

MEASUREMENT: FLUX, COMPOSITION, ENERGY, & VELOCITY OF LOW-ENERGY POSITIVE IONS; HIGH-ENERGY SOLAR WIND FLUX; TOTAL PRESSURE

EQUIPMENT: TWO CURVED - PLATE ANALYZERS (ONE WITH VELOCITY FILTER), GROUND PLANE, COLD CATHODE ION GAUGE

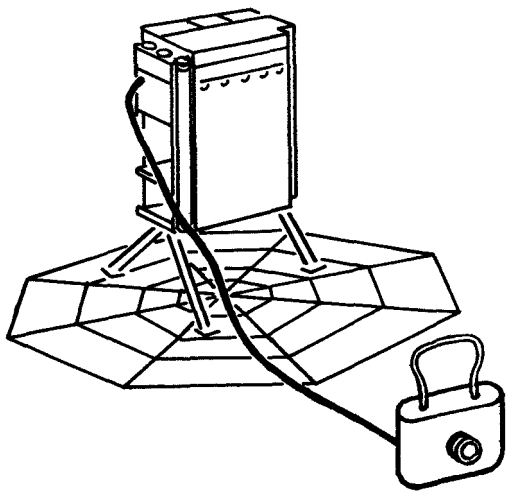

DEC 68 5178.1.13

HEAT FLOW

NASA No. SO37

OBJECTIVE: INTERNAL TEMPERATURE & COMPOSITION OF THE MOON. FROM THIS, INFERENCES CAN BE MADE ON LUNAR EVOLUTION, BULK COMPOSITION, CHEMICAL SORTING, INTERNAL ENERGY (INCLUDING RADIOACTIVITY), & NEAR-SURFACE MATERIAL PROPERTIES

MEASUREMENT: TEMPERATURE GRADIENT & THERMAL CONDUCTIVITY TO DETERMINE AVERAGE OUTWARD HEAT FLUX AT THE SURFACE

EQUIPMENT: APOLLO LUNAR SURFACE DRILL; TWO PROBES, 1-IN. DIAM X 43 IN. LONG, WITH HEATING ELEMENTS & TEMPERATURE SENSORS; PROBES PLACED AT BOTTOM OF 10 - FT HOLES

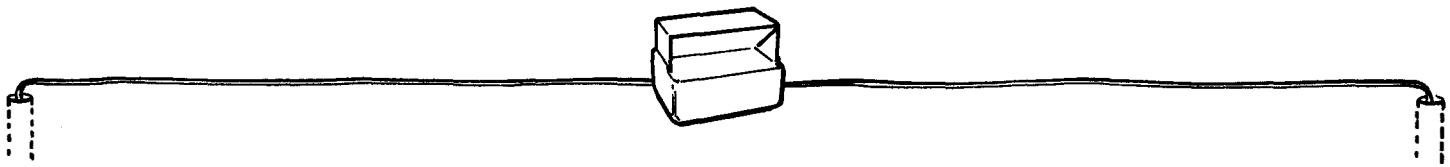

DEC 68 5178.1.14

CHARGED-PARTICLE LUNAR ENVIRONMENT

NASA No. SO38

OBJECTIVE: ENERGY SPECTRUM OF LUNAR ATMOSPHERE, LOW-ENERGY COSMIC RAY PARTICLES, SOLAR WIND & MAGNETOSPHERE EFFECTS

MEASUREMENT: ENERGY DISTRIBUTION & VARIATION WITH TIME OF ELECTRON & PROTON FLUX

EQUIPMENT: TWO DETECTOR PACKAGES, EACH WITH SIX DETECTORS

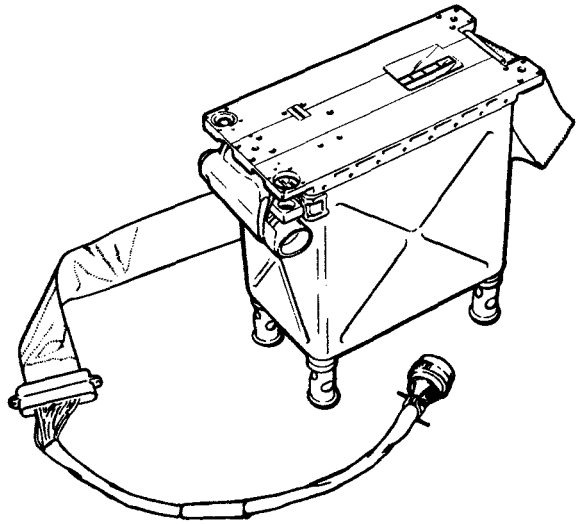

APR 69 5178.1.15

ALSEP AND THE FUTURE

ALSEP IS A FORERUNNER IN EQUIPMENT FOR LUNAR & SPACE EXPLORATION
CONSTRAINED BY EARLY AVAILABILITY, WEIGHT, AND SIZE

POSSIBLE FUTURE GOALS

NEW EXPERIMENTS

UNDER PRELIM DEVELOPMENT
- METEOROID SPECTROMETER
- GRAVIMETER
- LUNAR ELECTRIC FIELD
- NEUTRAL MASS SPECTROMETER

- OPTICAL & RADAR OBSERVATORIES

MULTIPLE LOCATIONS
- LATERAL VARIATIONS OF GRAVITY, ETC.
- SEISMIC PHASE VELOCITY & DIRECTION
- MEASUREMENT REDUNDANCY

VEHICLE - BORNE EXPERIMENTS
- GEOCHEMISTRY & GEOPHYSICAL TRAVERSE
- DEEP DRILLING

OCT 67 5178.1.16

SYSTEM REQUIREMENTS AND CONSTRAINTS

- LM INSTALLATION
- MASS PROPERTIES
- PRELAUNCH OPERATIONS
- LAUNCH, FLIGHT AND LANDING
- REMOVAL FROM LM
- ASTRONAUT INTERFACE
- LUNAR ENVIRONMENT
- DATA TRANSMISSION AND RECEPTION
- GENERAL DESIGN CRITERIA

OCT 67 5178.2.1

INSTALLATION IN LUNAR MODULE

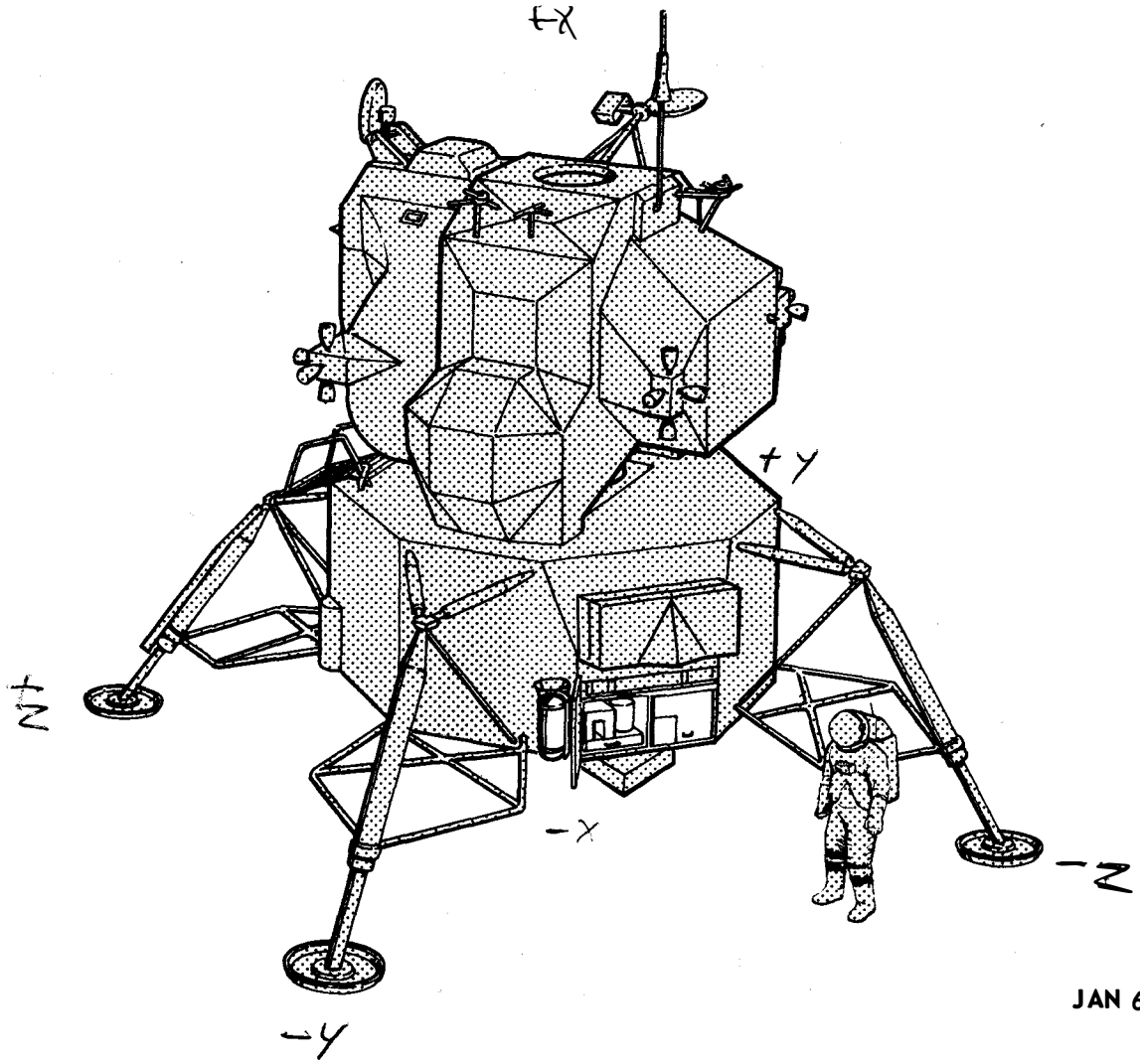

JAN 69 5178.2.2

PRELAUNCH INSTALLATION

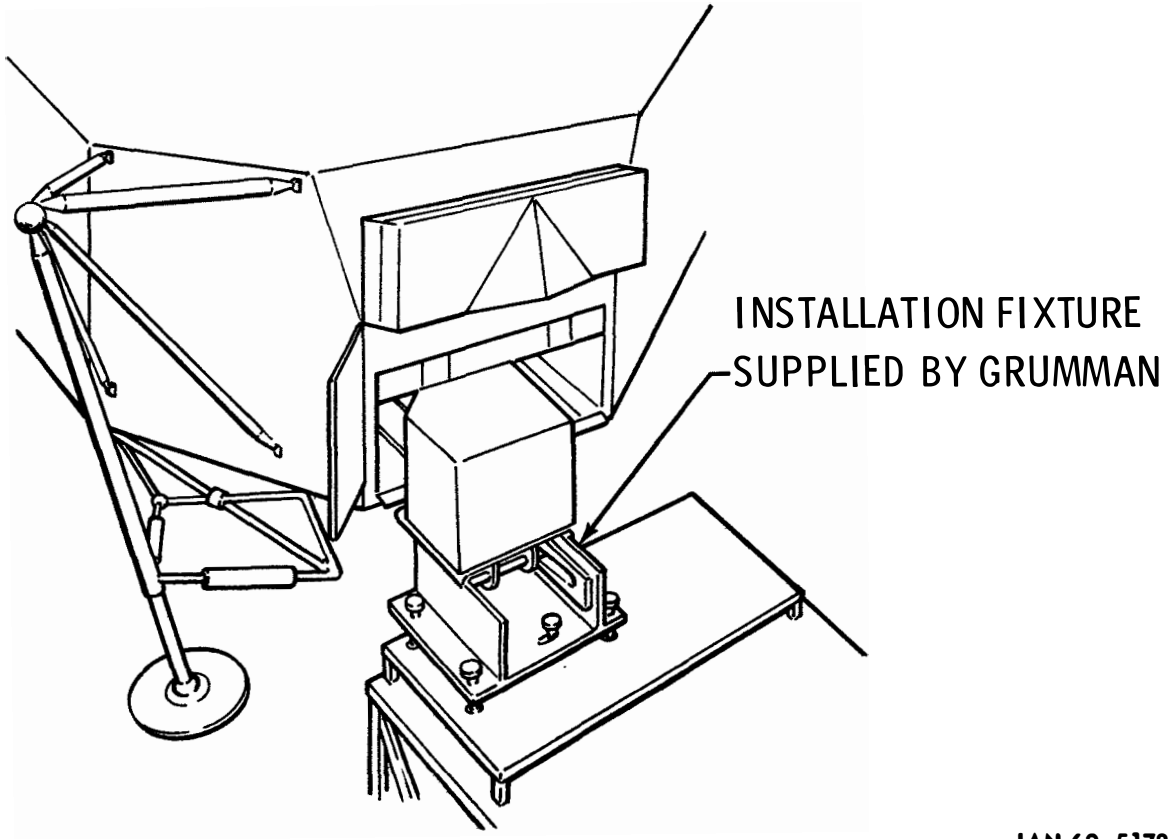

JAN 69 5178.2.3

ALSEP/LM GEOMETRY

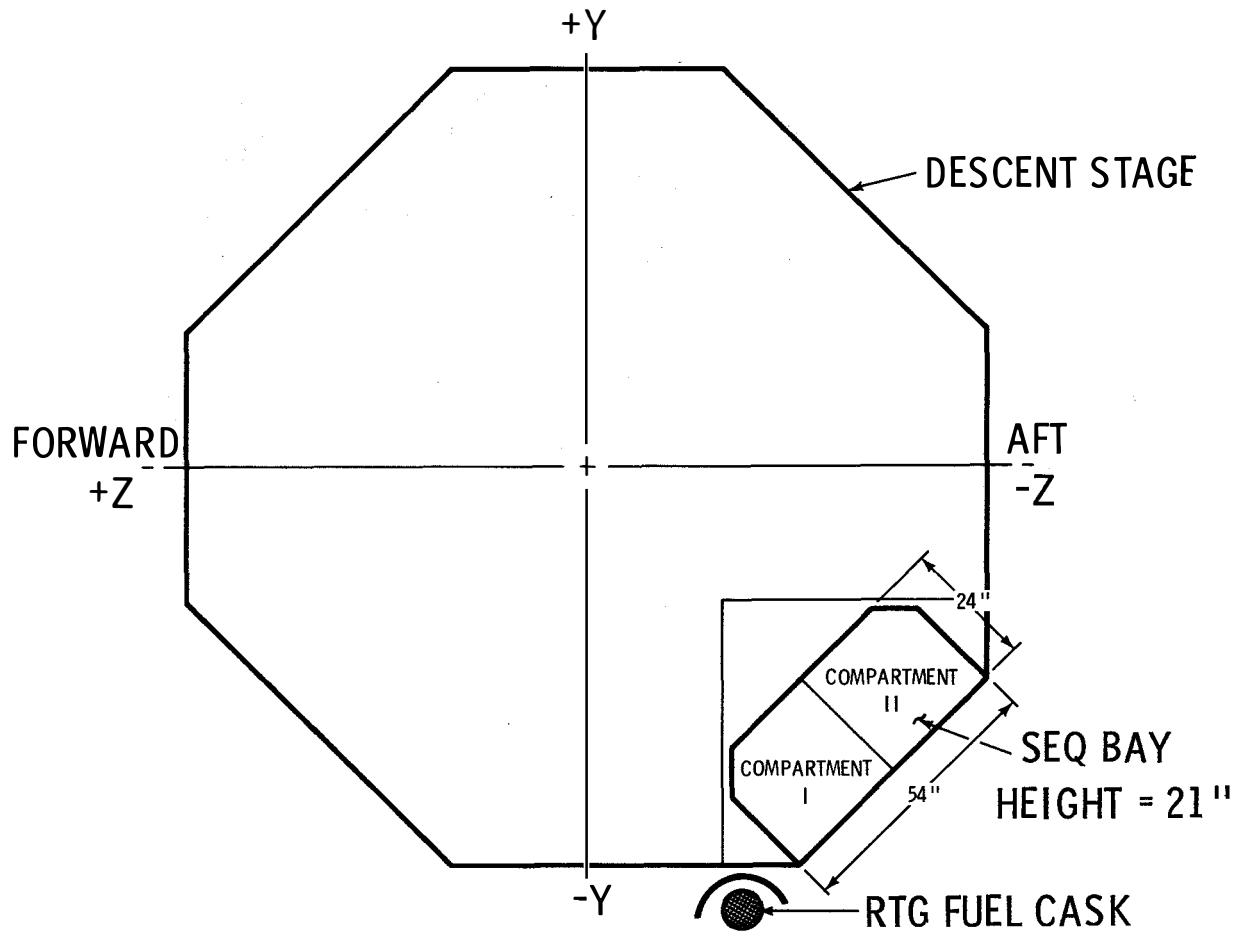

OCT 67 5178.2.4

STOWED CONFIGURATION

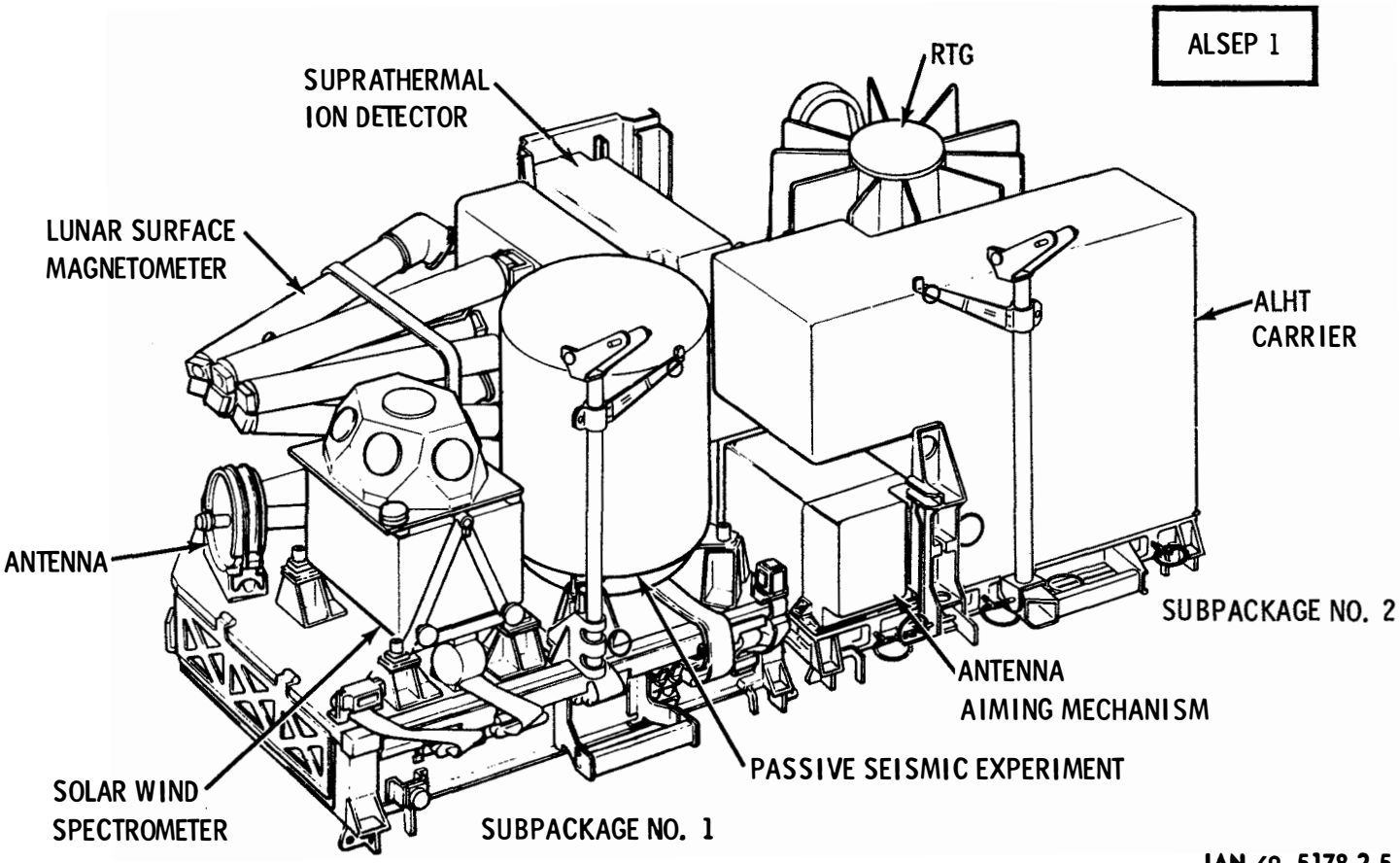

JAN 69 5178.2.5

LM HARD POINTS

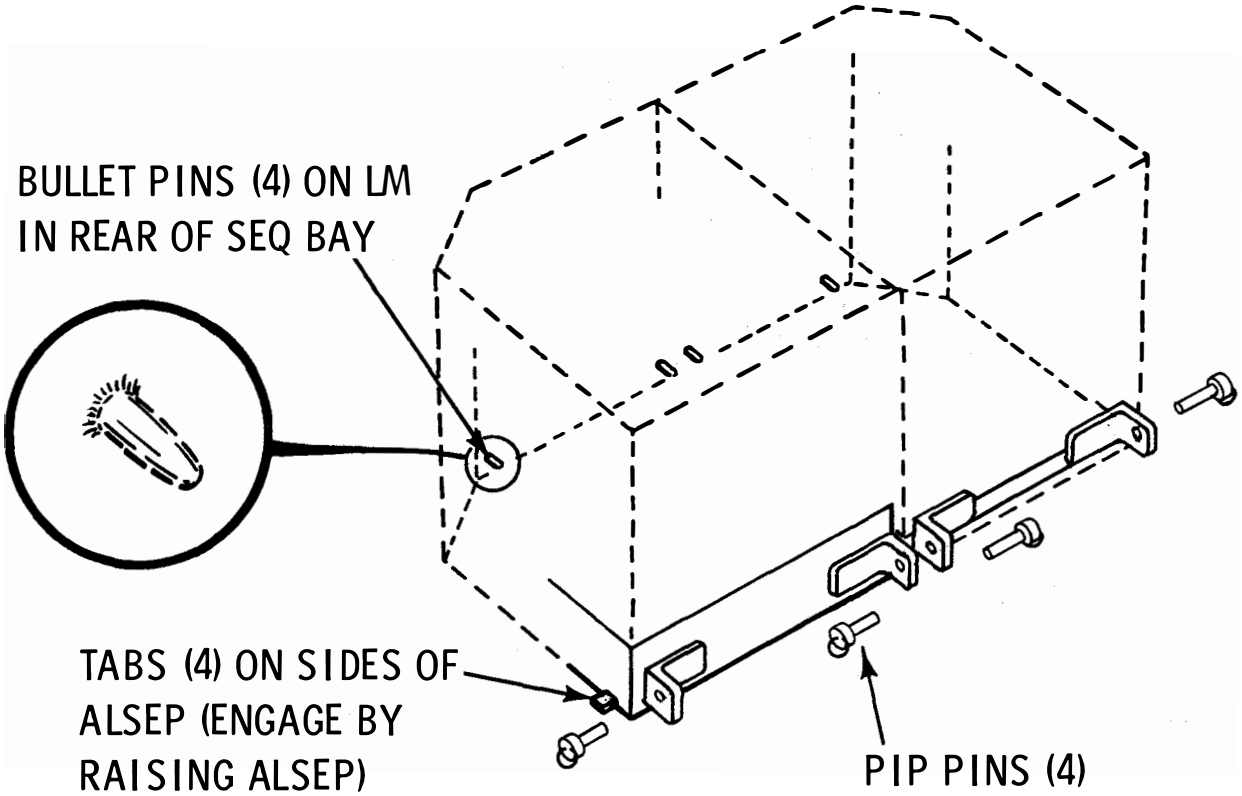

JAN 69 5178.2.6

MASS PROPERTIES

RESTRICTIONS

MAX WT IN DESCENT STAGE = 210 LB

LOADING IN BOTH COMPARTMENTS:

MINIMUM WT = 50 LB

MAXIMUM WT = 215 LB

(EXTERNAL CASK NOT INC)

EXPERIMENTS	50.7 LB
POWER (GFE ONLY)	68.2
LM ALLOWANCE	5.0
ALHT	18.0
ALL OTHER (CFE)	140.8
TOTAL	282.7 LB

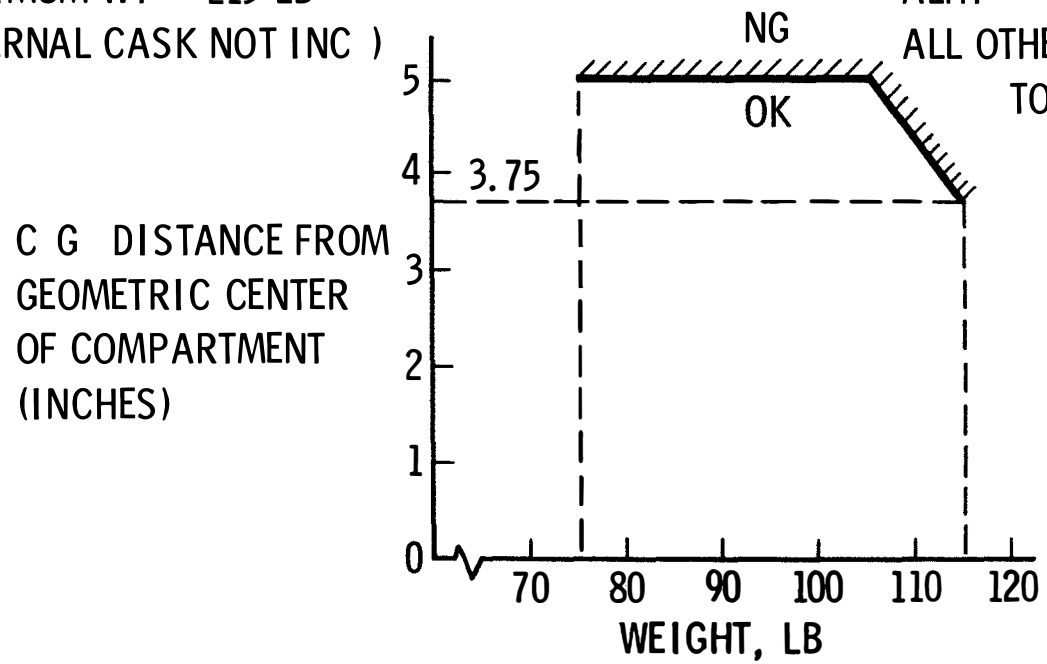

JAN 69 5178.2.7

PRELAUNCH OPERATIONS

- STORAGE UP TO 2 YRS IN CONTROLLED ENVIRONMENT
- CHECKOUT PRIOR TO LM INSTALLATION (INC MSFN TESTS)
- LM INSTALLATION IN LANDING GEAR CHECK FIXTURE
  (BEFORE ≈ F-60 DAYS)
- OPERATIONS AFTER S/C STACKING
  - FUEL CASK INSTALLATION ON LM
  - BATTERY INSTALLATION FOR ALSD, IF CARRIED
  - FUEL CAPSULE INSTALLATION IN CASK
- HEAT REMOVAL FROM CASK VIA CONDITIONED AIR
  (1500 WATTS, NOMINAL)

GROUND SUPPORT EQUIPMENT

SYSTEM TEST SET

PROVIDES COMPLETE UPLINK, DOWNLINK & CHECKOUT FUNCTIONS FOR FACTORY, KSC & DURING MSFN TEST

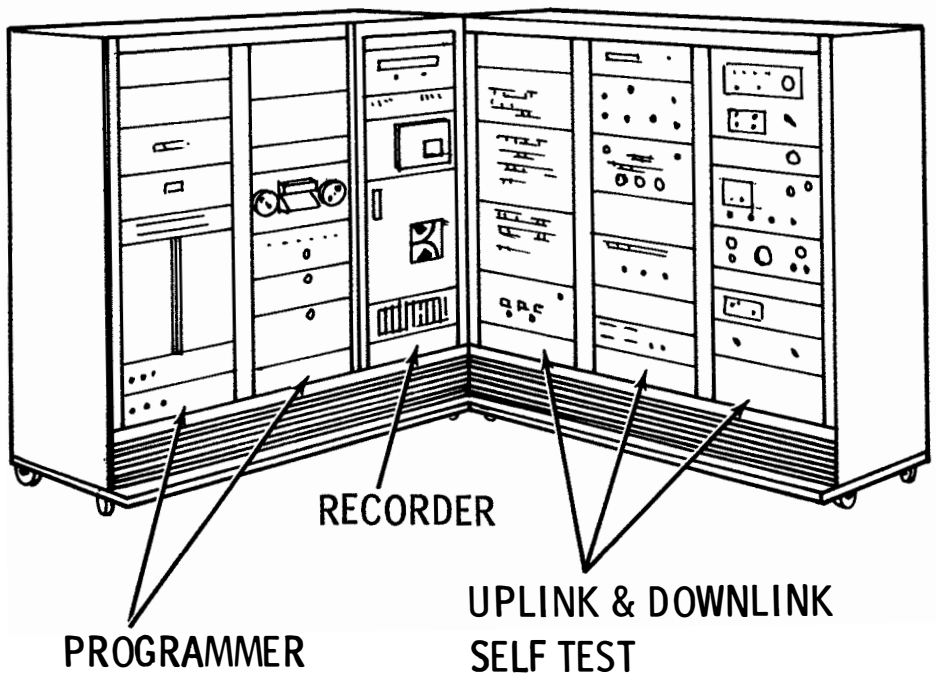

EXPERIMENT AUXILIARIES

MOST SENSORS CANNOT BE OPERATED IN EARTH ENVIRONMENT. THEREFORE, FLUX TANKS & VACUUM CHAMBERS ARE PROVIDED FOR LIMITED END-TO-END TESTS

MECH HANDLING EQUIP

LM INSTALLATION FIXTURE
SPECIAL EQUIPMENT
FOR RTG FUEL CAPSULE

APR 69 5178.2.9

LAUNCH, FLIGHT AND LANDING (STOWED IN SEQ BAY)

- ALSEP INACTIVE (NO ELECTRICAL INTERFACE)
- LAUNCH SHOCK & VIBRATION (TYPICAL SPACECRAFT ENVIRONMENTS)
- SEA LEVEL PRESSURE TO SPACE VACUUM
- TEMPERATURE CONTROLLED BY LM: 0°F TO 160°F (MAXIMUM VALUE OCCURS POST - TOUCHDOWN)
- HEAT LOADS FROM CASK TO LM $<$100 BTU/HR TENTATIVE
- TOUCHDOWN DYNAMIC LOADS: 8g FOR 10 - 20 MS (ANY AXIS) PLUS 14 RAD/SEC^2 ROTATION ACCEL (AROUND LATERAL AXIS)

REMOVAL FROM LUNAR MODULE

- BOTTOM OF SEQ BAY 18 IN. TO 60 IN. FROM SURFACE & ± 15° TILT (ANY DIRECTION)
- CLOSE LM DOOR FOR THERMAL INTEGRITY
- LANDING LOCATION WITHIN ± 5° FROM EQUATOR & ± 45° E - W
- LM PROBABLY LANDS FACING NW OR SW
- SUN ANGLE 7° TO 20° (POSSIBLE 45°) ABOVE HORIZON AND RISING
- ALHT REMOVAL SEPARATELY OR ATTACHED TO ALSEP

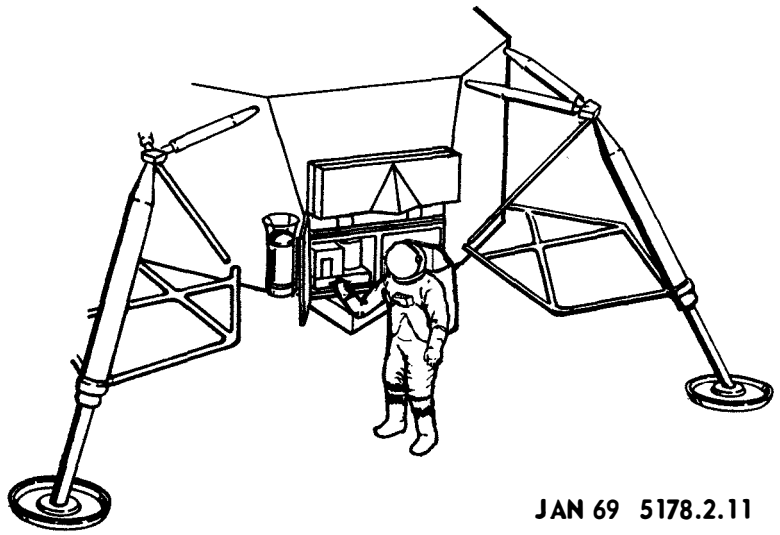

JAN 69 5178.2.11

ASTRONAUT INTERFACE

SAFETY

BIOMED: WITHIN EXERTION AND LIFE SUPPORT LIMITATIONS

TEMPERATURES: NO CONTACT WITH EXTREMELY HOT SURFACES

PUNCTURES: NO SHARP EDGES, ETC.; NO HAZARDOUS PYROTECHNICS

CAPABILITY

MOBILITY: LIMITATIONS ON REACH (UP & DOWN), KNEELING, TWISTING, ETC.

DEXTERITY: KNOBS & HANDLES SIZED TO FIT GLOVES, MINIMUM USE OF FINE ADJUSTMENTS, FEW ELECTRICAL CONNECTORS MATED ON MOON

VISUAL: INDICATORS (LEVELING & ALIGNMENT) PROVIDE HIGH CONTRAST; STRIPES ON PACKAGE EDGES WHERE THERMAL DESIGN PERMITS

BARBELL CARRY

- ALLOWS ALL EQUIPMENT TO BE CARRIED BY ONE MAN IN ONE TRAVERSE
- SUITCASE HANDLES FOR TWO-MAN OR BACKUP CARRY MODE
- GIVES GOOD BALANCE & VIEW OF FEET
- EQUIVALENT EARTH WEIGHT ≈ 35 LB

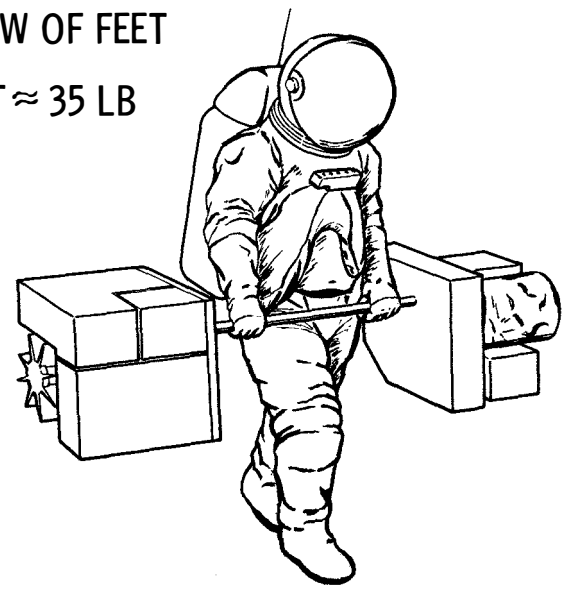

- MAY BE SET DOWN TO REST
- CARRY BAR LATER USED AS ANTENNA MAST

APR 69 5178.2.13

ASTRONAUT PLSS CONSTRAINTS

2500 FT COMM LIMIT

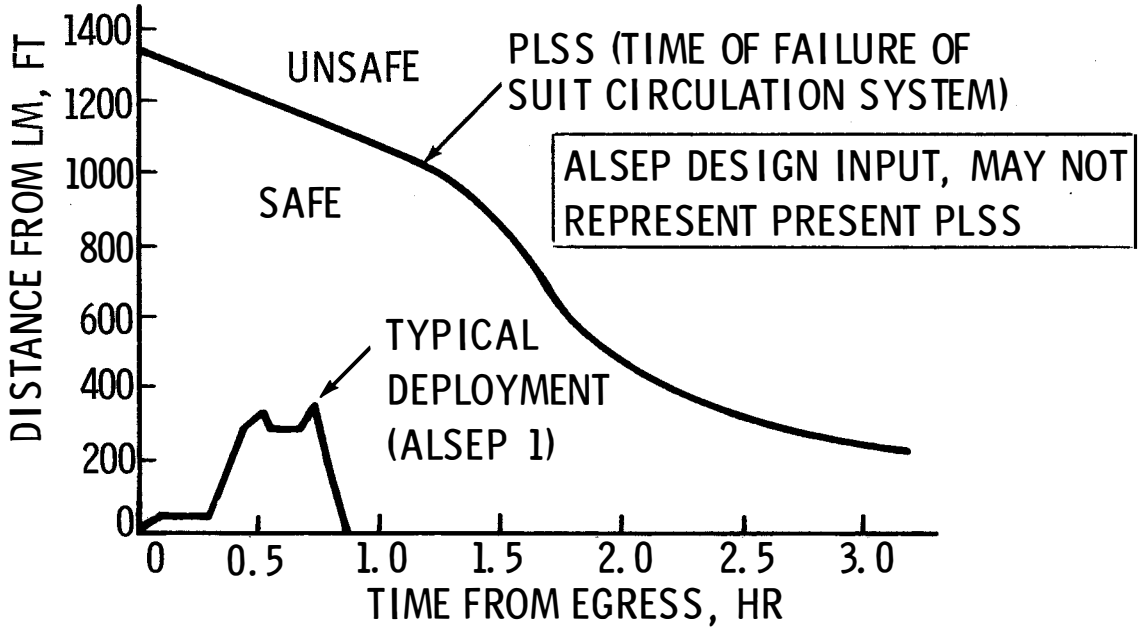

JAN 69 5178.2.14

DEPLOYMENT FOR ALSEP 1

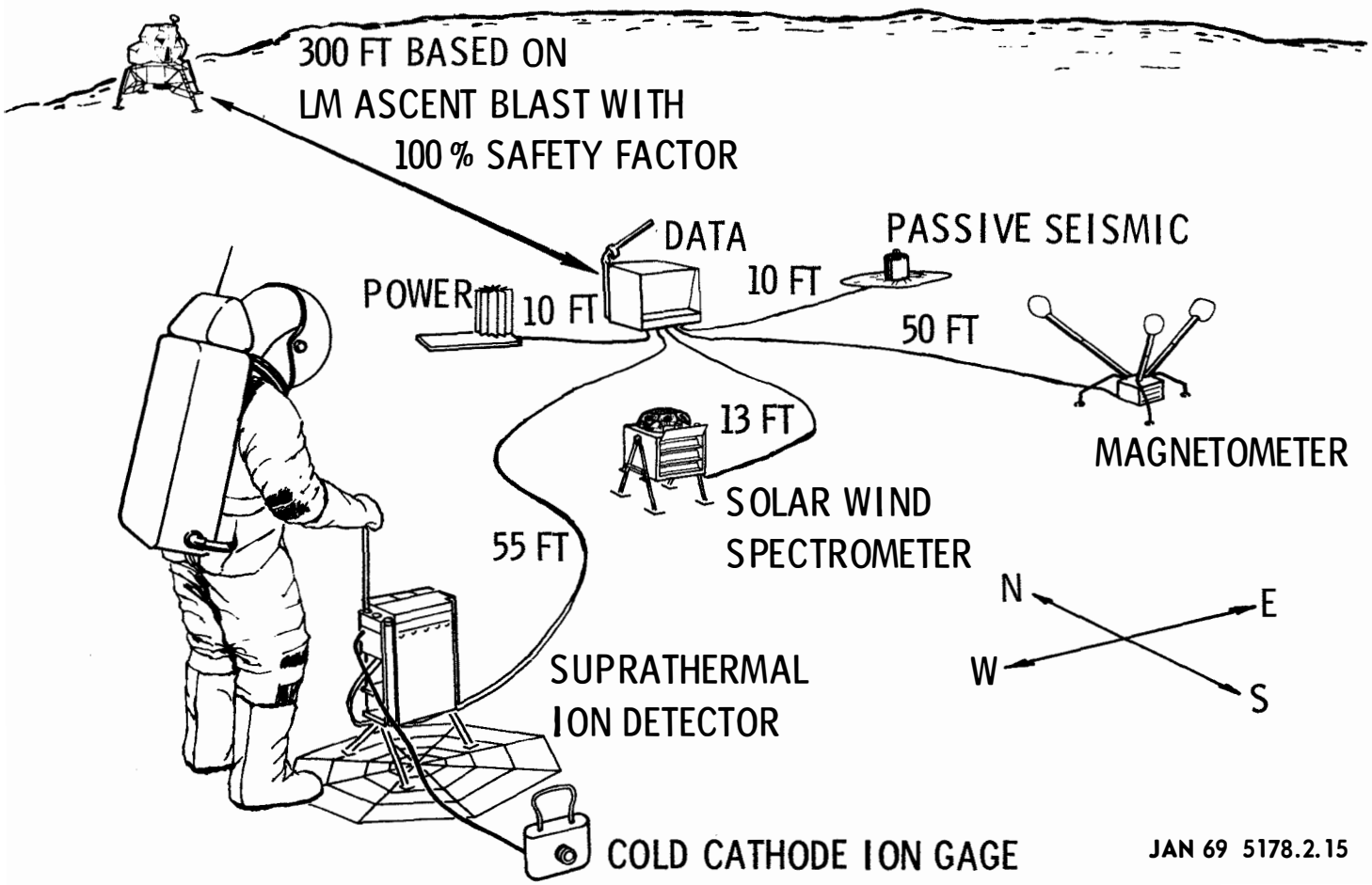

LUNAR ENVIRONMENT

(SPECIFICATION LED 520 - ID)

SURFACE TEMPERATURE: - 300° F TO +250° F

SURFACE SLOPES: LESS THAN 12° "EFFECTIVE" SLOPE OVER SPACING OF LM LANDING GEAR (SELECTED SITES). SELECTABLE LOCATIONS FOR ALSEP LESS THAN 5° SLOPES

BEARING STRENGTH: COMBINATION OF SOFT (1 PSI PENETRATES 4 IN.) & HARD (INFINITELY RIGID ROCK)

FRICTION COEFFICIENT: 0.4 to 1.0

OPTICAL PROPERTIES: LUNAR NORMAL ALBEDO (0.047 OVER SOLAR SPECTRUM, 0.098 OVER VISIBLE SPECTRUM) PLUS UNIQUE DIRECTIONAL REFLECTIVITY

PRESSURE: LESS THAN 10^{-12} TORR

MICROMETEORS: MSC DOCUMENT DS-21 APPLIES

RADIATION: NEGLIGIBLE EFFECT ON SYSTEM ELECTRONICS FOR ONE-YEAR OPERATION

DATA TRANSMISSION AND RECEPTION

MAXIMUM COMPATIBILITY WITH APOLLO
PROCEDURES & HARDWARE AT MSFN

NON-INTERFERENCE WITH
APOLLO COMMUNICATIONS

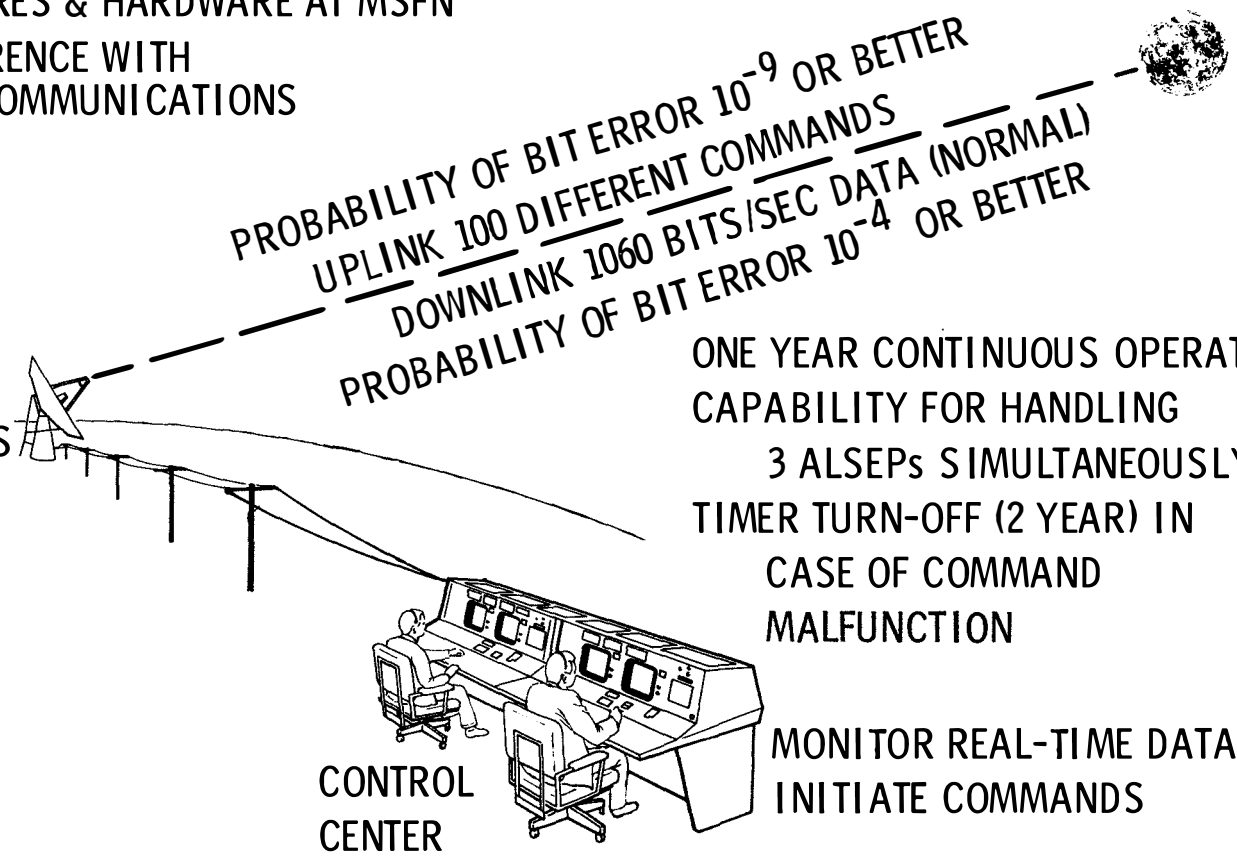

ONE YEAR CONTINUOUS OPERATION
CAPABILITY FOR HANDLING
3 ALSEPs SIMULTANEOUSLY
TIMER TURN-OFF (2 YEAR) IN
CASE OF COMMAND
MALFUNCTION

MONITOR REAL-TIME DATA
INITIATE COMMANDS

OCT 67 5178.2.17

ANTENNA POINTING REQUIREMENTS

LUNAR LIBRATION: AN APPARENT WOBBLING MOTION AS VIEWED FROM THE EARTH; CAUSES EQUIVALENT EARTH MOTION IN LUNAR COORDINATES

PRINCIPAL EFFECTS:

- ± 7.5° LUNAR LONGITUDE DUE TO:
  - CONSTANT ANGULAR RATE OF MOON ABOUT ITS AXIS
  - VARIABLE ANGULAR RATE IN ELLIPTICAL ORBIT AROUND EARTH
- ± 6.5° LUNAR LATTITUDE DUE TO:
  - INCLINATION OF MOON'S ROTATION AXIS TO ITS ORBITAL PLANE

SECONDARY EFFECTS:

- NON-SPHERICAL EARTH & MOON
- SOLAR PETURBATIONS
- GYROSCOPE & PENDULUM COUPLING

COMBINED EFFECTS: PATTERN CHANGES MONTHLY & YEARLY

ALSEP ANTENNA: 22° BEAM WIDTH DOWN 4.2 db AIMED AT MEAN CENTER OF PATTERN

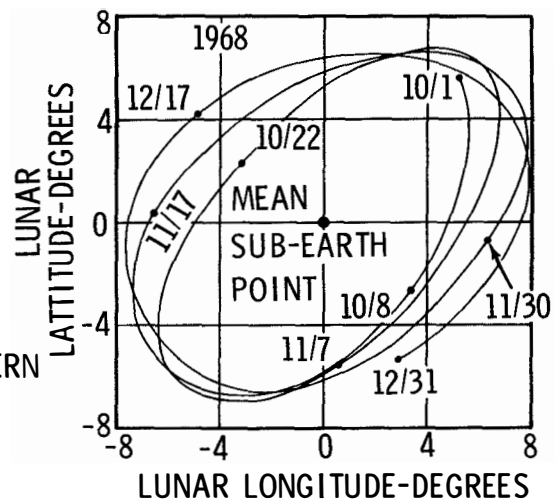

JAN 69 5178.2.18

ALSEP/MSFN INTERFACE

REQUIREMENT	RESOLUTION	
APOLLO COMPATIBILITY	S-BAND EQUIPMENT, ESSENTIALLY SAME AS APOLLO; SCHEDULE SEPARATE MSFN SITES FOR APOLLO & ALSEP	
3 ALSEPS SIMULTANEOUSLY	UPLINK ONE FREQ (2119 MHz) BUT UNIQUE COMMAND ADDRESSES FOR UP TO 4 ALSEPS	DOWNLINK USE DUAL SITES; THREE XMTR FREQUENCIES (2276.5, 2278.5 & 2275.5 MHz)
BIT ERROR RATE	10^{-9}: 10 KW XMTR POWER & 15 db ALSEP ANTENNA MSFN: 30 - ft, 85 - ft S/N MARGIN: +28 db, +35 db NOTE: XMTR TUNING FOR MAX POWER IS NOT CRITICAL (ASSUMED 30-MIN TURN-AROUND APOLLO TO ALSEP)	10^{-4}: 1 WATT MIN XMTR POWER & 15 db ALSEP ANTENNA NORMAL BIT RATE = 1.06 KBPS LOW BIT RATE = 0.53 KBPS (CONTINGENCY) HIGH BIT RATE = 10.6 KBPS (ACTIVE SEISMIC, ON REQUEST) S/N MARGIN:
		MSFN: 30-ft, 85-ft 1.06 KBPS: +7.2 db, HI 10.6 KBPS: LO, +6.5 db
2 - YEAR TIMER		BULOVA ACCUTRON 720 ± 30 DAYS

NOV 67 5178.2.19

SPECIAL COMMUNICATIONS FEATURES

UPLINK

- ALTHOUGH ALSEP WAS AUTOMATED IN ORIGINAL CONCEPT, IT NOW DEPENDS ON ACTIVE USE OF MANY COMMANDS
- 100 POSSIBLE COMMANDS BUT EACH ALSEP USES 65 to 75
- NO COMMANDS REQUIRING PRECISE TIMING ($\pm$ 10 SEC IN PSE FORCED LEVELING)
- COMMAND CAPABILITY WITHIN 15 MIN HIGHLY DESIRED FOR $\approx$15 ON/OFF SWITCHES
- ALSEP RECEPTION & IDENTIFICATION OF COMMANDS IS VERIFIED VIA TM
- UPLINK 1000 BPS, 61 BITS PER COMMAND
- COMMAND RATE NO MORE THAN 1/SEC

DOWNLINK

- NO DATA STORAGE IN ALSEP; HENCE, ALL DATA TRANSMITTED IN NEAR REAL TIME & 100% COVERAGE IS DESIRED
- NORMAL MODE (1.06 KBPS) HAS 64 10- BIT WORDS/FRAME $\approx$0.604 SEC/FRAME
- LOW BIT RATE HAS SAME FORMAT $\approx$1.208 SEC/FRAME
- HIGH BIT RATE IS SPECIAL FORMAT FOR ASE
- EXCEPT FOR ASE, NO WORDS CAN BE INTERCHANGED BETWEEN EXPERIMENTS, ALL EXPERIMENTS OPERATE FULL-TIME & DATA IS INTERLACED IN FORMAT
- APPROX DISTRIBUTION OF DATA: 5% SYNC, 10% HOUSEKEEPING, 85% SCIENCE

- START-UP WHILE ASTRONAUT IS ON SURFACE & BEGIN INITIAL INTERROGATION
- DUST COVERS ON PARTICLE EXPERIMENTS REMOVED AFTER LM ASCENT

MSFN/MCC SUPPORT REQUIREMENTS

- ALL RECEIVED DATA MUST BE RECORDED BY MSFN (UP TO 3 ALSEPS)
- EACH ALSEP MUST BE MONITORED REAL-TIME FOR FIRST 45 DAYS (i.e., THROUGH SECOND SUNSET) FOR CRITICAL THERMAL TRANSIENTS PLUS SCIENCE
- AFTER 45 DAYS, REAL-TIME MONITORING FOR 2 CONTINUOUS HR PER 24 REQ'D (2 HR PER 8 HR DESIRED) FOR REMAINDER OF YEAR
- ADDITIONAL CONTINUOUS COVERAGE REQUIRED FOR 60 HOURS EACH TERMINATOR CROSSING (26 TIMES PER YEAR PER ALSEP)
- FOR MULTIPLE ALSEPS, USE TIME-SHARING OF INTERMITTENT MONITORING (NO MORE THAN TWO SIMULTANEOUSLY IN REAL TIME)
- HIGH BIT RATE FOR ASE (10.6 KBPS) TO BE COMPRESSED TO LESS THAN 2.4 KBPS FOR TRANSMISSION FROM REMOTED SITES TO MCC. NO OTHER ALSEP MONITORED REAL-TIME DURING ASE OPERATIONS
- PROFILE OF ALSEP OPERATIONS DAY/NIGHT TO BE DETERMINED

OCT 68 5178.2.21

STATION SELECTION FOR ALSEP

(MOON DECLINATION MAXIMUM NORTH)

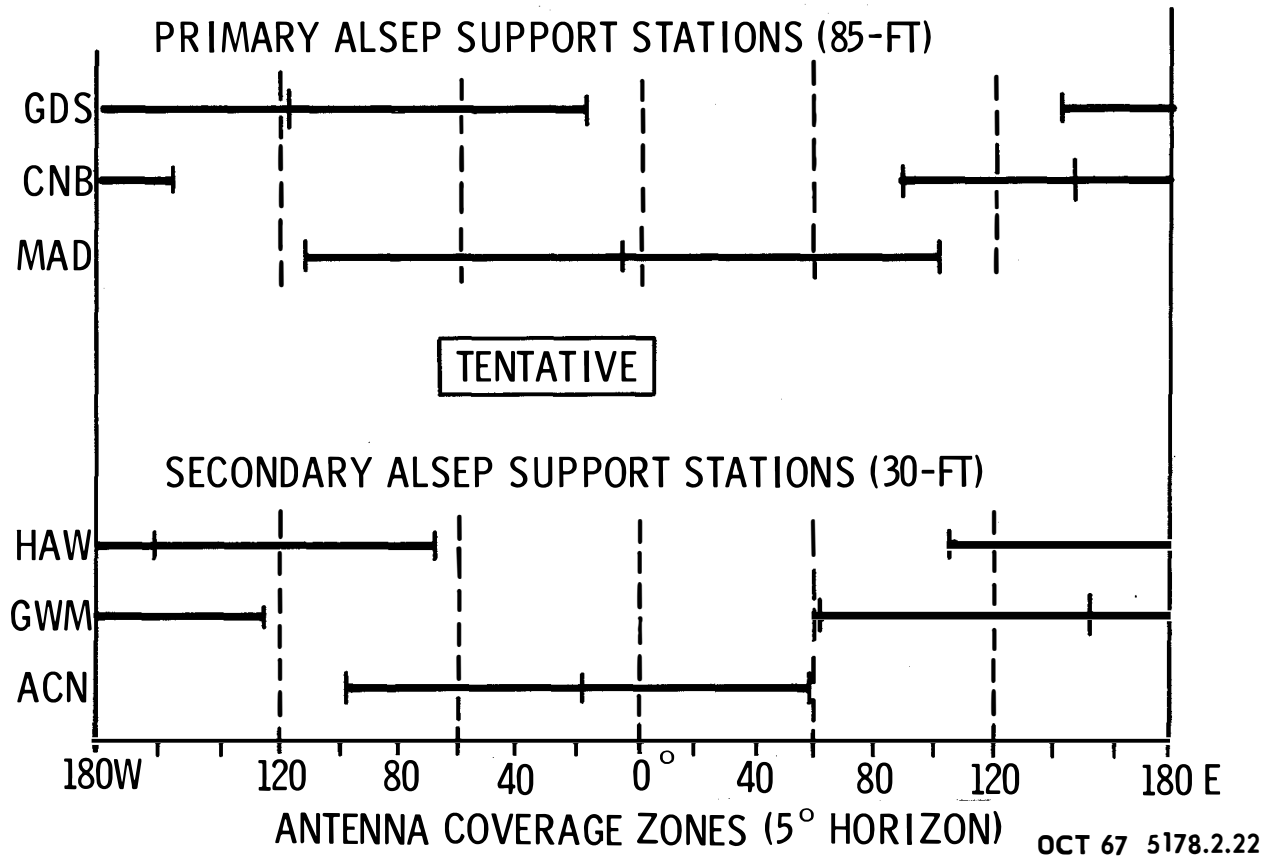

OCT 67 5178.2.22

STATION SELECTION FOR ALSEP

(MOON DECLINATION MAXIMUM SOUTH)

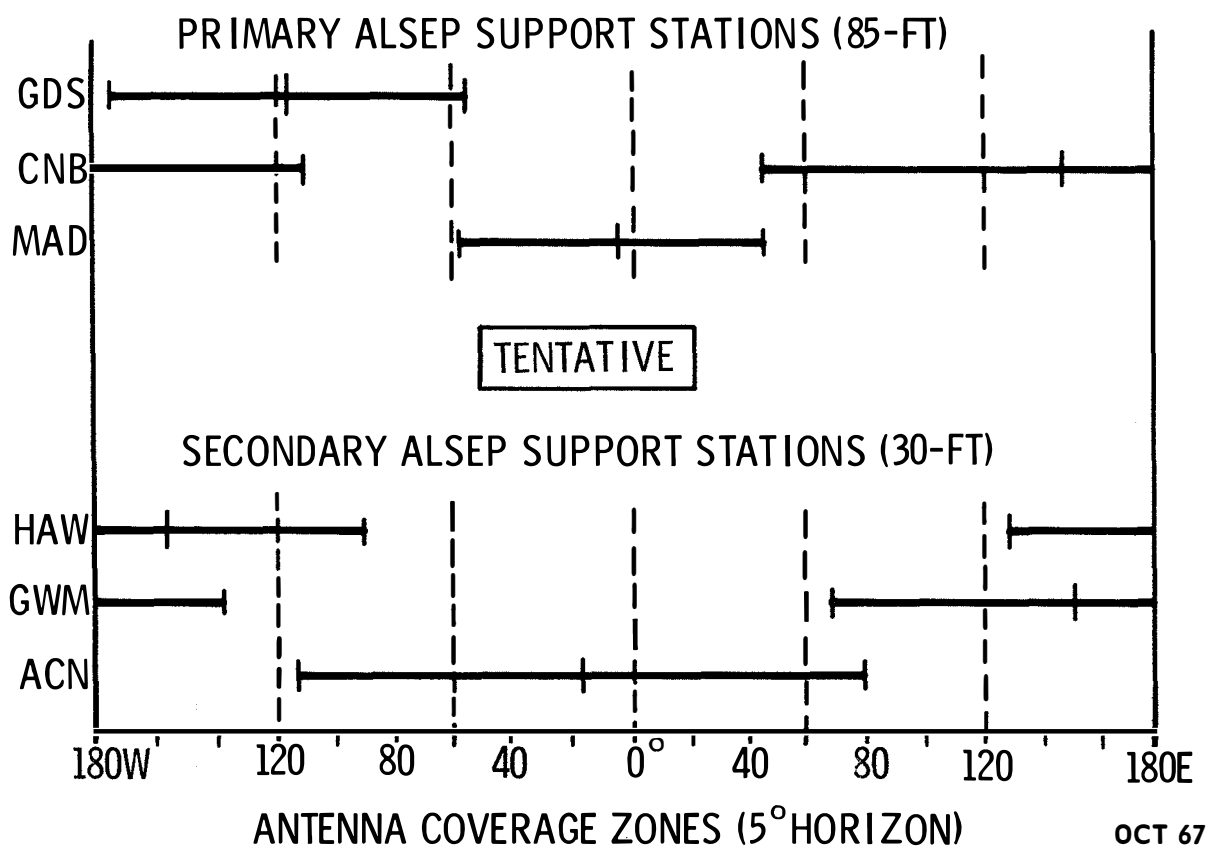

OCT 67 5178.2.23

GENERAL DESIGN CRITERIA

CREW SAFETY: NO SHARP EDGES, CONTACT WITH HOT SURFACES, EXPOSED HIGH VOLTAGE POINTS, OR HAZARDOUS PYROTECHNICS (USE ONLY ASI)

THERMAL DEGRADATION: SYSTEM MUST PERFORM WHEN SURFACES ARE FULLY DEGRADED BY DUST OR UV

FAIL SAFE: MALFUNCTIONS MUST NOT PROPAGATE SEQUENTIALLY

PARTIAL OPERATIONS: SYSTEM MUST PERFORM WHEN ONE OR MORE EXPERIMENTS ARE NOT DEPLOYED OR HAVE FAILED

MATERIALS: WITHOUT NASA APPROVAL, NO FLAMMABLE, TOXIC, OR UNSTABLE MATERIALS & NO PLASTICS EXCEPT EPOXY RESIN-BASED COMPOUNDS, TEFLON, OR MYLAR

EMI: ALSEP COMPONENTS SHALL NEITHER BE A SOURCE OF EM DISTURBANCES NOR BE SUSCEPTABLE TO EXTERNAL SOURCES

GROUNDING: SEPARATE POWER & SIGNAL RETURNS; ONE COMMON GROUND POINT IN THE DATA SUBSYSTEM; SHIELDS CONNECTED TO CHASSIS GROUNDS AT BOTH ENDS

NOV 67 5178.2.24

SYSTEM LEVEL DESCRIPTION

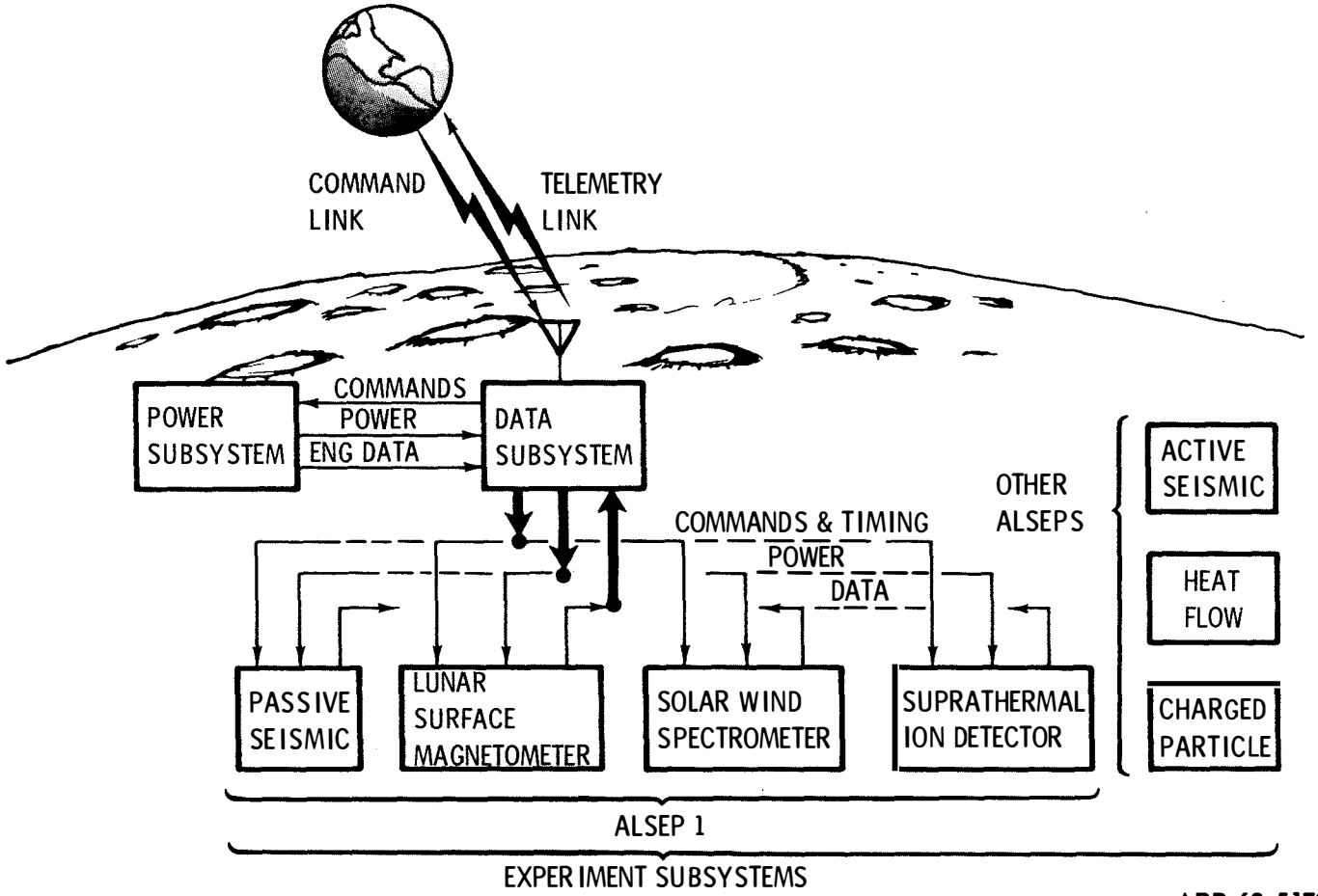

APR 69 5178.3.1

SYSTEM FUNCTIONAL DIAGRAM

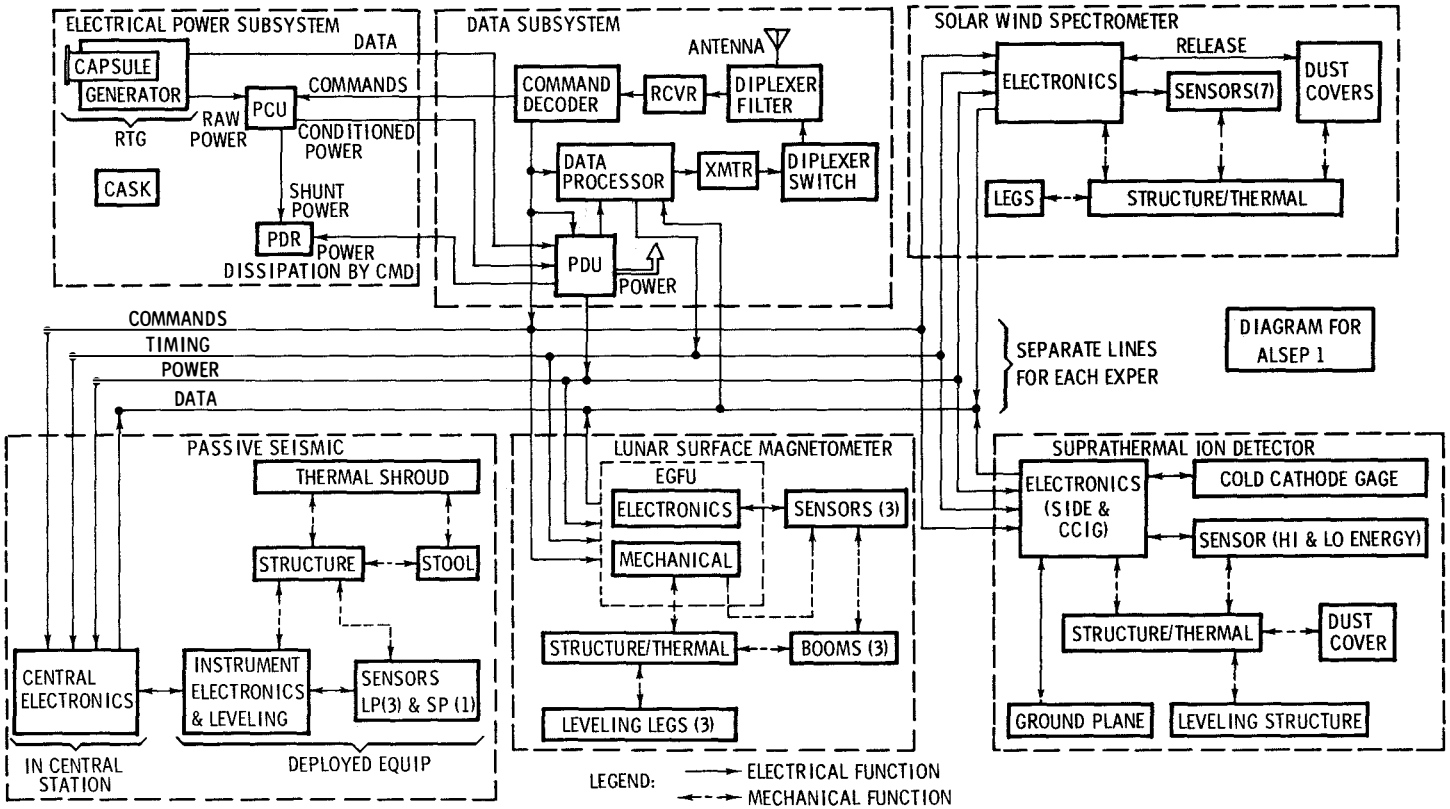

DEC 67 5178.3.2

SYSTEM HARDWARE LIST

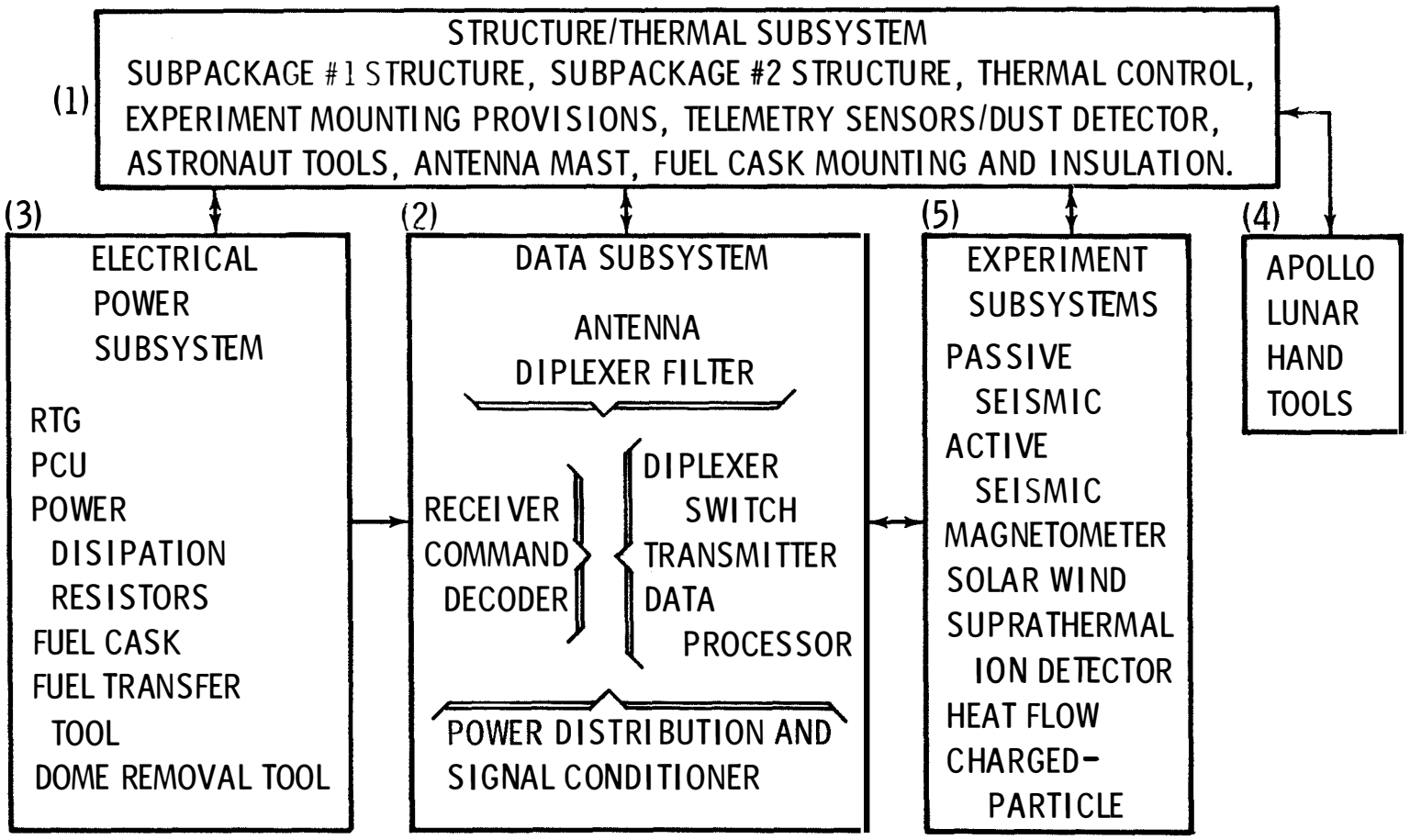

NOV 67 5178.3.3

FIG. 1-1

ALSEP 1 SYSTEM GEOMETRY

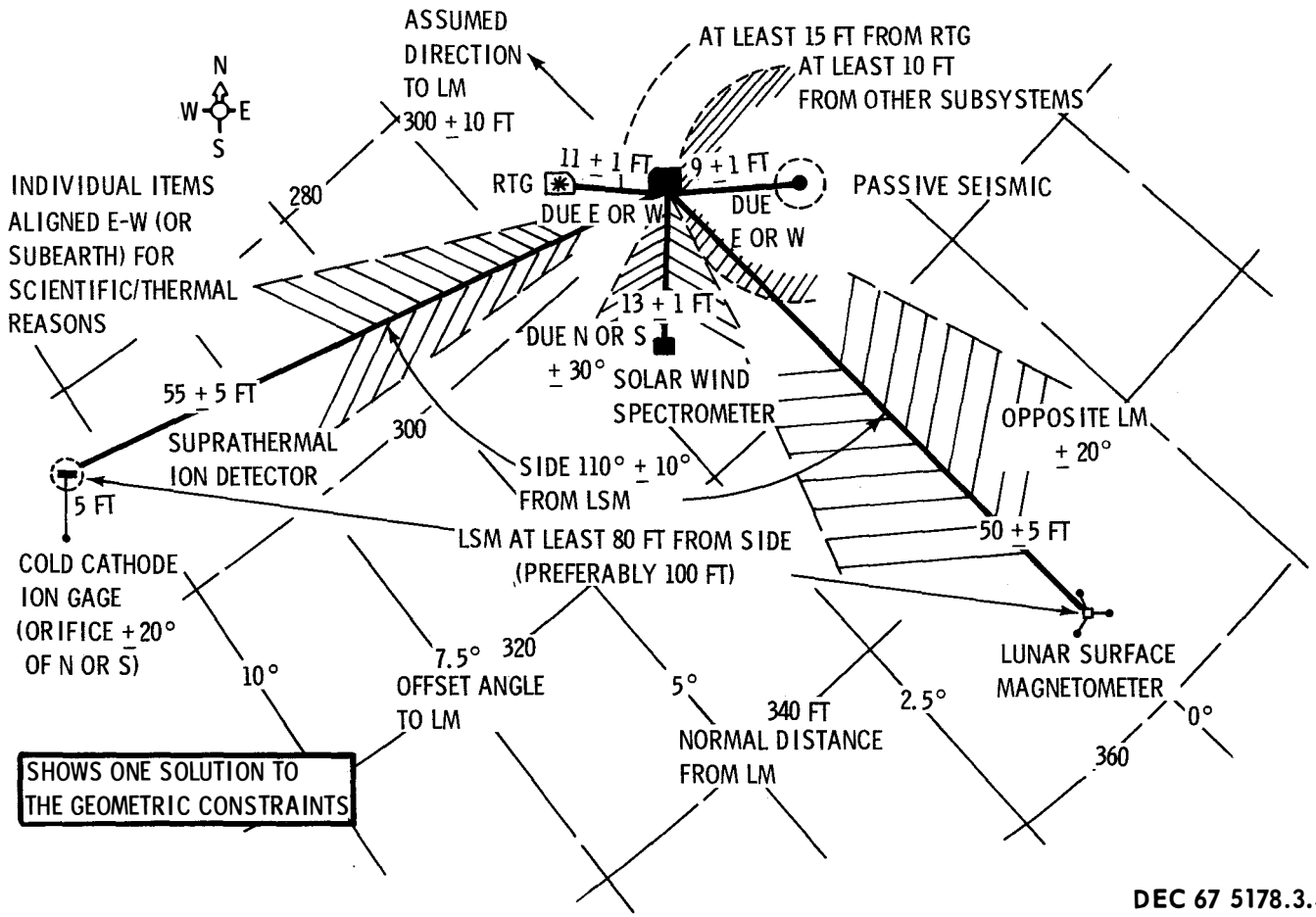

DEC 67 5178.3.4

ALSEP 1 SYSTEM DATA FLOW

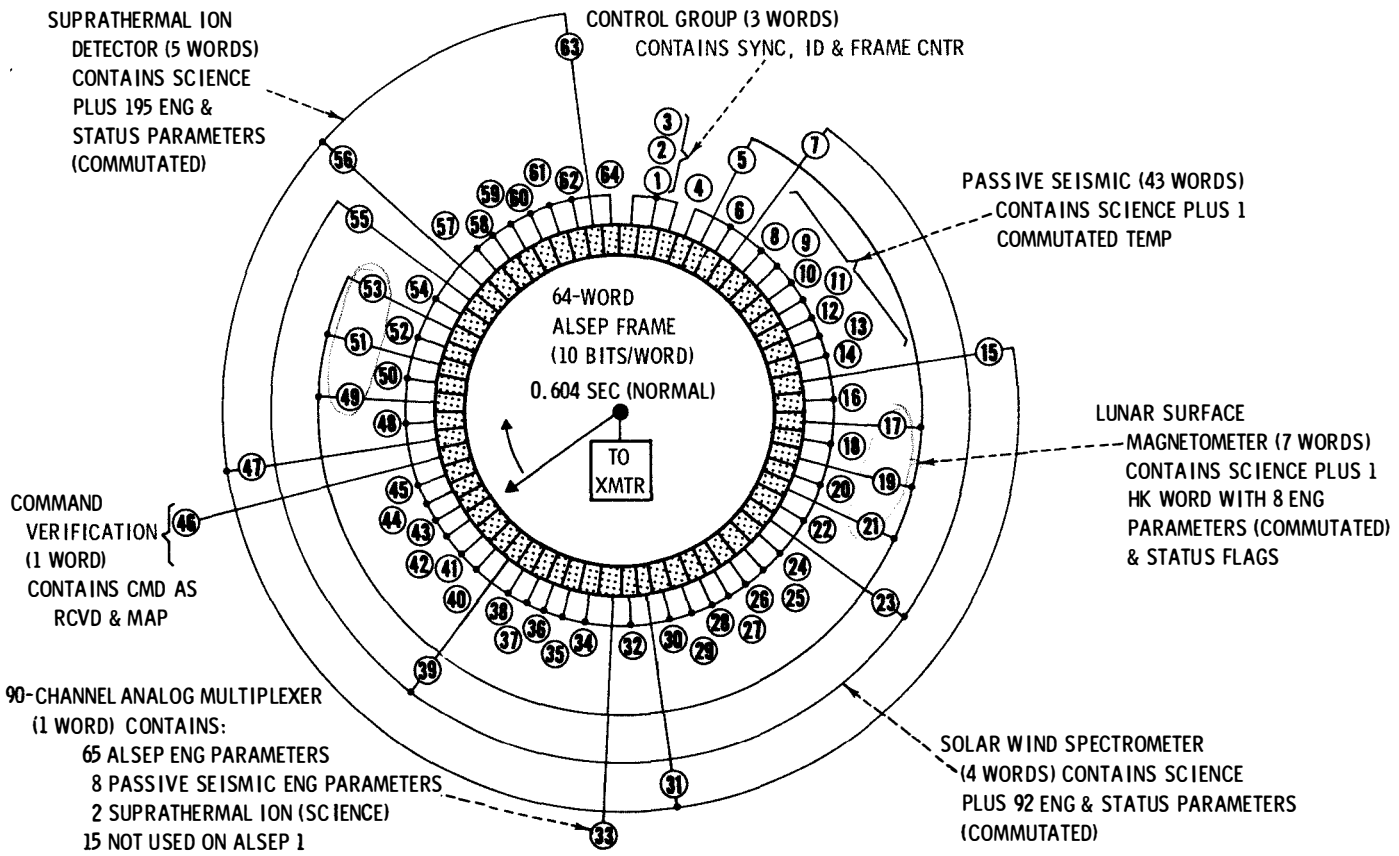

OCT 68 5178.3.5

STRUCTURE/THERMAL SUBSYSTEM CHARACTERISTICS

PHYSICAL PARAMETERS

SIZE, IN.: VARIOUS

EARTH WT, LB: 70.02 TOTAL

SUBPACKAGE #1	SUBPACKAGE #2	EXTERNAL
21.91	24.45*	14.6

* INC 0.66 DUST DETECTOR

POWER, W: DUST DETECTOR 0.54 ON, 0.07 OFF

OPERATIONS

DEPLOYMENT: LOCATE 300 FT FROM LM, ORIENT ± 5° WRT SHADOW, REMOVE EXPERIMENTS & ERECT SUNSHIELD, CONNECT MAST APPROX TIME, NOT INC TRAVERSE, 8 MIN

POST DEPLOYMENT: TURN DUST DETECTOR ON PRE-ASCENT

COMPONENTS

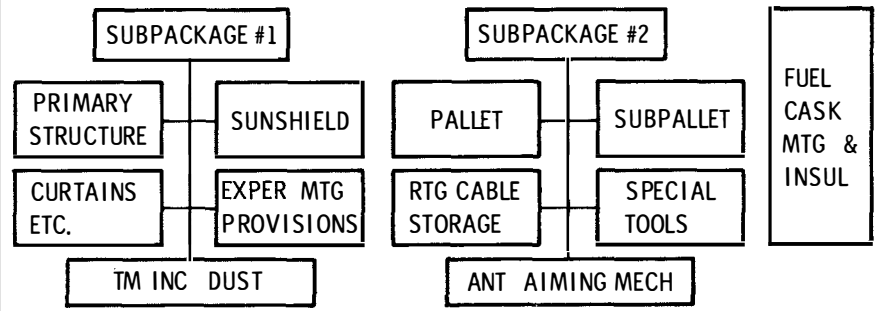

COMMUNICATIONS

COMMANDS: 2 FOR DUST CELLS ON/OFF
5 FOR HEATERS

DATA: 19 ANALOG ENGINEERING PARAMETERS (INC 6 FOR DUST) SAMPLED ONCE EACH PER 54 SEC ALSEP SEQUENCE

KEY FEATURES

LM WEIGHT INCLUDES 5.00 LBs FOR CASK MOUNTING PROVISIONS (NOT PART OF ALSEP BUDGET) TO COVER NECESSARY REINFORCING & TIE-POINT FITTINGS. ORIGINALLY SPECIFIED AT 3.00 LBs.

APR 69 5178.3.6

STRUCTURAL COMPONENTS

SUBPACKAGE #1 (21.91 LB)

SUBPACKAGE #2 (24.43 LB)

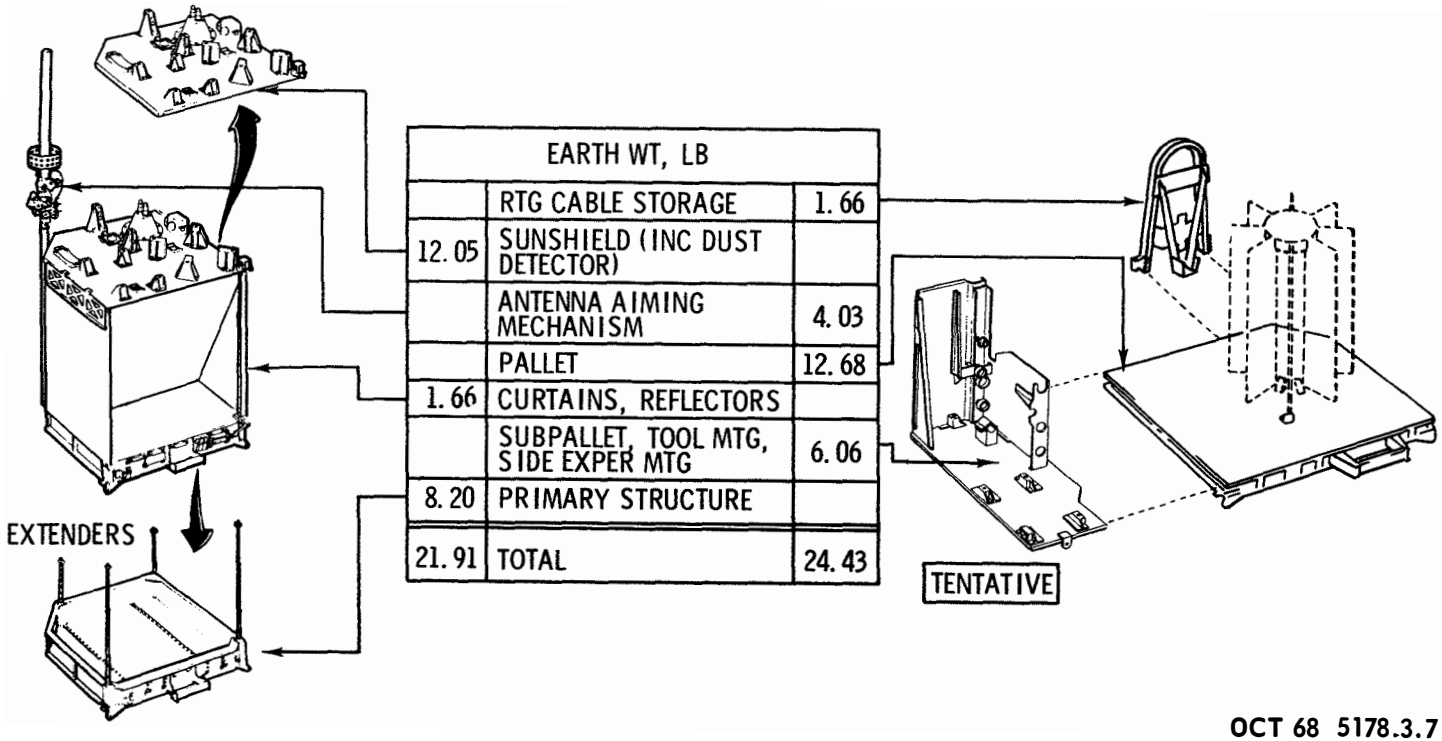

EARTH WT, LB		
	RTG CABLE STORAGE	1.66
12.05	SUNSHIELD (INC DUST DETECTOR)	
	ANTENNA AIMING MECHANISM	4.03
	PALLET	12.68
1.66	CURTAINS, REFLECTORS	
	SUBPALLET, TOOL MTG, SIDE EXPER MTG	6.06
8.20	PRIMARY STRUCTURE	
21.91	TOTAL	24.43

OCT 68 5178.3.7

THERMAL CONTROL

PHILOSOPHY: EACH SEPARATE UNIT CONTROLLED INDEPENDENTLY EXCEPT FOR ELECTRICAL HEATER POWER REQUIREMENTS

	PASSIVE RADIATION	MULTI-LAYER INSULATION	SUNSHIELD	CURTAINS	SPECULAR REFLECTOR	THERMOSTATICALLY CONTROLLED HEATER
RTG	R					
CENTRAL ELECTRONICS	C	I	C	B	C	J
PASSIVE SEISMIC		P	P	P		K
MAGNETOMETER	S/T	I			S	J
SUPRATHERMAL ION	T					L
SOLAR WIND	S	I	E		S	L
CHARGED-PARTICLE	T	I				K
ACTIVE SEISMIC	C/A	I	C/A	A		L
HEAT FLOW	C/H	I	C/H	B	C	L

J = COMMAND OVERRIDE OFF
K = COMMAND OVERRIDE ON/OFF
L = NO COMMAND OVERRIDE

LEGEND

R = TOP & ALL SIDES
C = COMBINED TOP & SUNSHIELD
S/T = S FOR ELECTRONICS, T FOR SENSORS
C/A = C FOR MORTAR PACKAGE ONLY
C/H = C FOR PROBE ELECTRONICS ONLY
T = TOP ONLY
S = SIDES ONLY (NORTH & SOUTH FOR MAGNETOMETER, SOUTH ONLY FOR SOLAR WIND)
I = INSULATED FROM LUNAR SURFACE
P = COUPLED TO LOCAL LUNAR SURFACE
E = EXTENDS OVER RADIATOR ON SIDE
B = BIDIRECTIONAL, EAST & WEST
A = ALL SIDES ON MORTAR PACKAGE

NOV 67 5178.3.8

SUBPACKAGE #1 THERMAL COMPONENTS

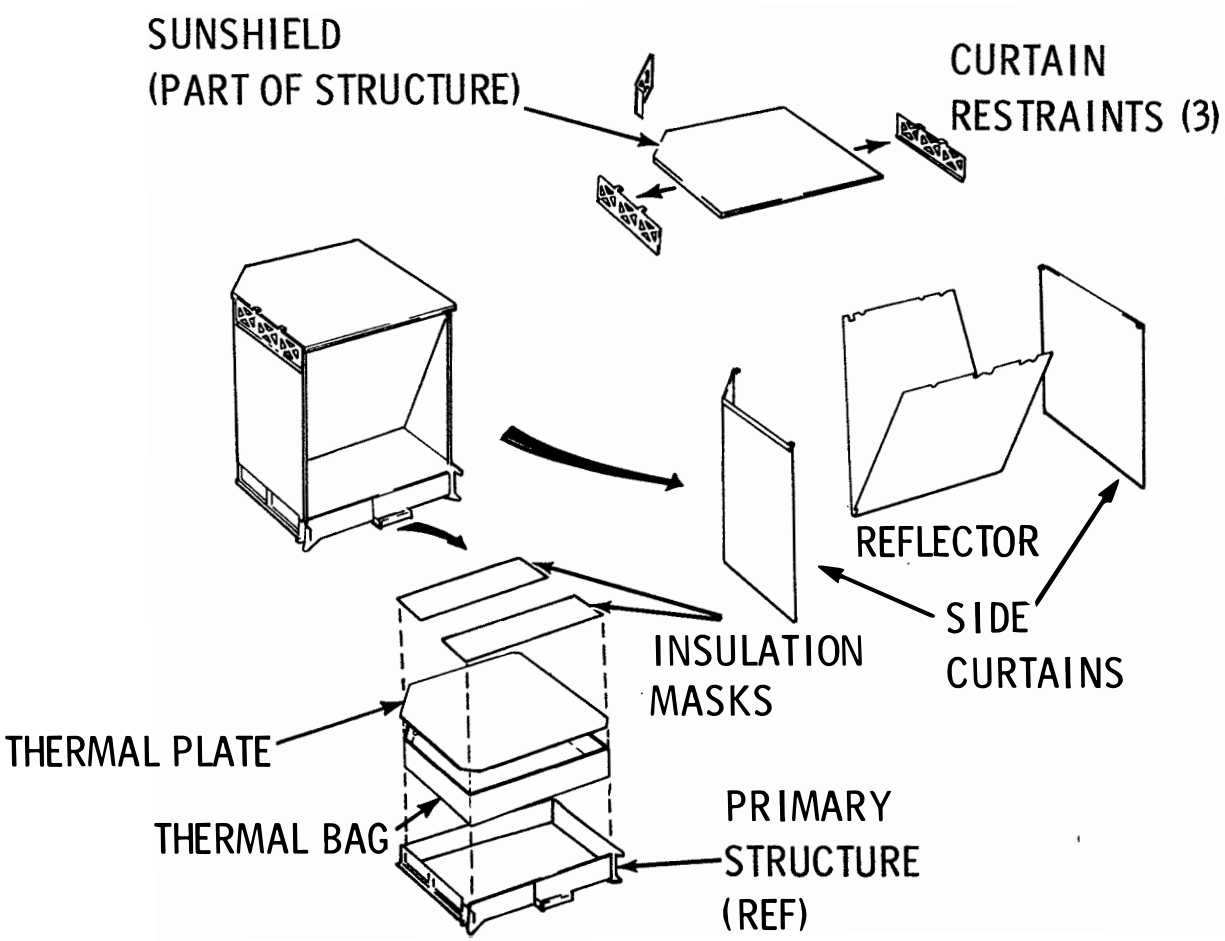

OCT 68 5178.3.9

EXPERIMENT MOUNTING PROVISIONS

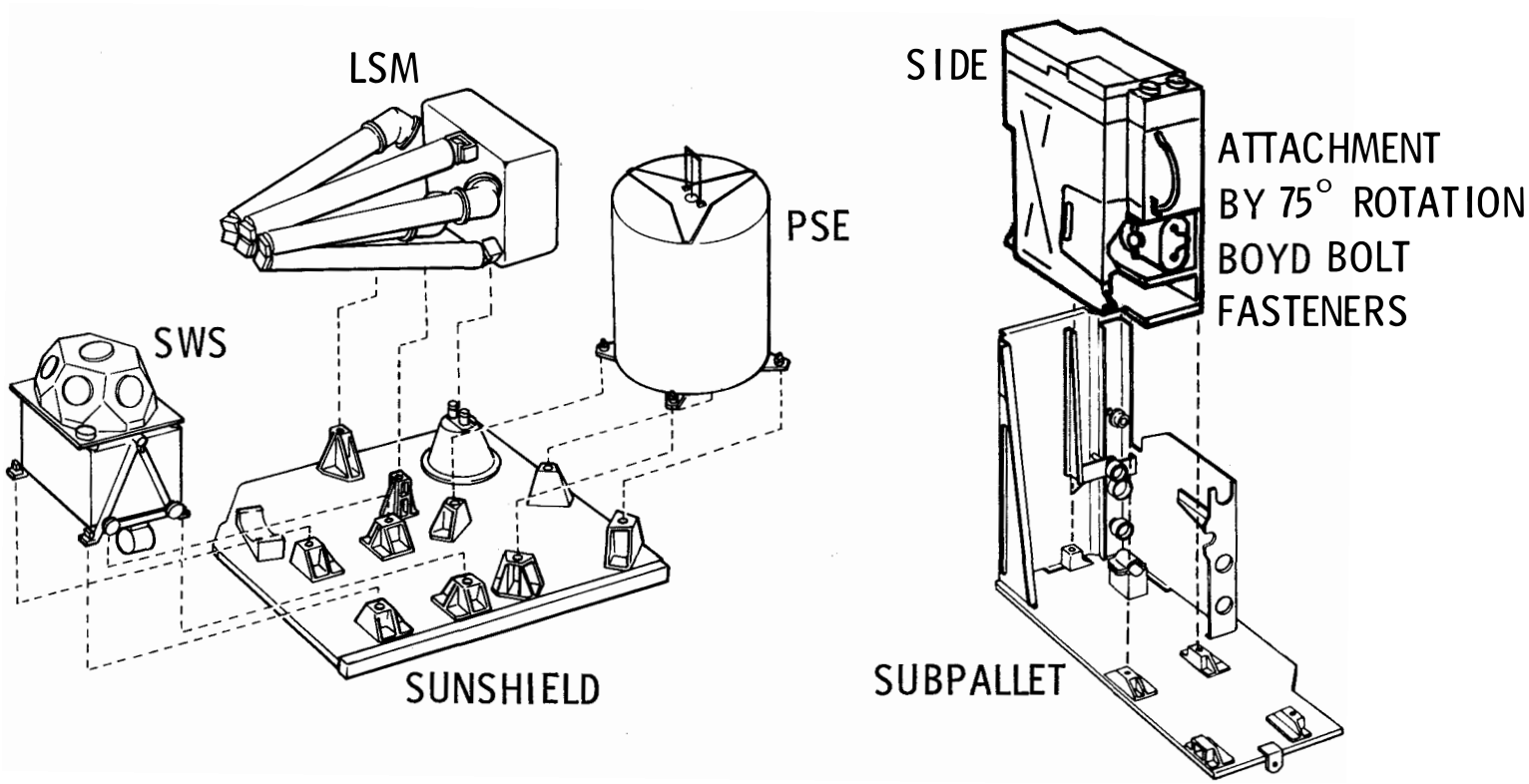

APR 69 5178.3.10

SPECIAL TOOLS

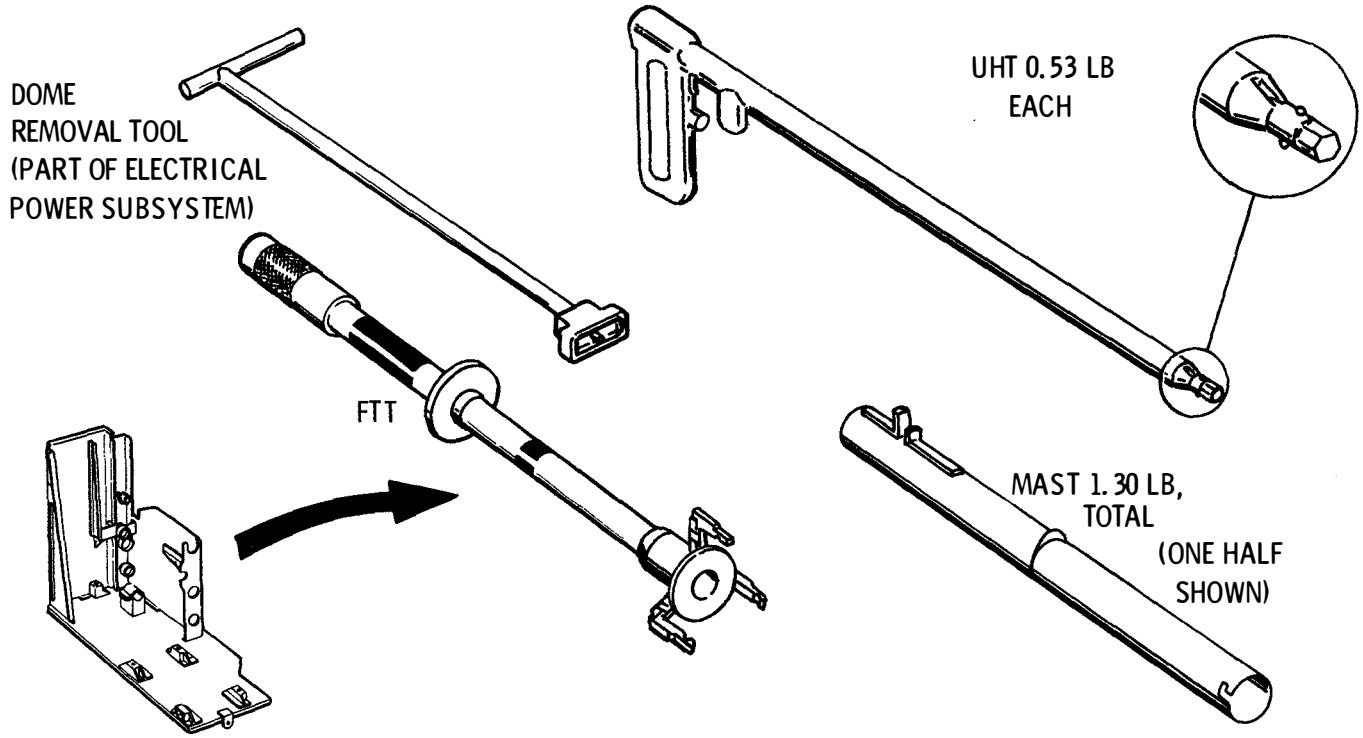

ALL WEIGHTS ARE EARTH LB

14.6 LB FUEL CASK MOUNT & INSULATION, PART OF STRUCTURE/THERMAL SUBSYSTEM, COVERED UNDER ELECTRICAL POWER SUBSYSTEM

APR 69 5178.3.11

STRUCTURE/THERMAL TELEMETRY

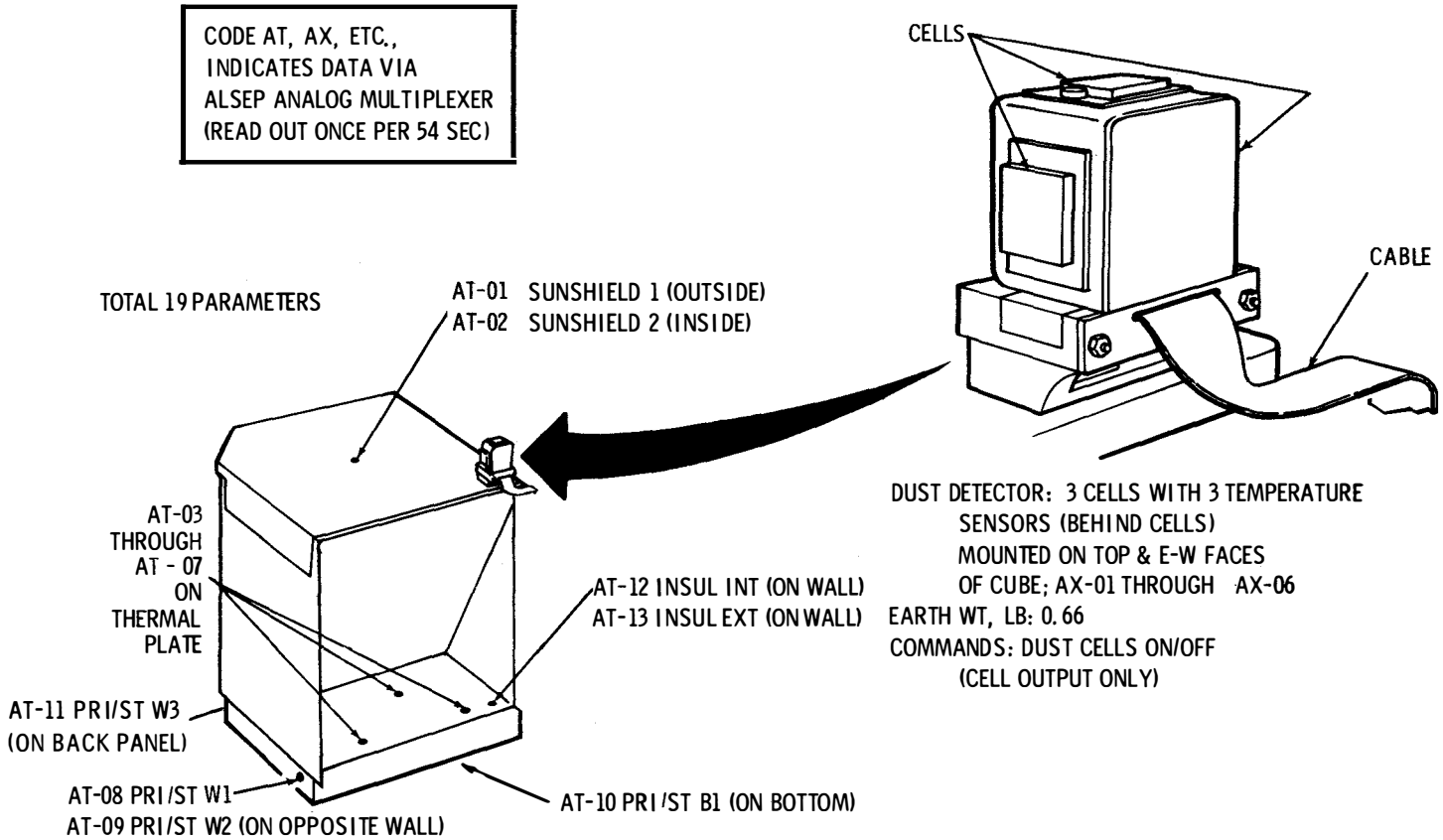

OCT 68 5178.3.12

ELECTRONICS COMPARTMENT

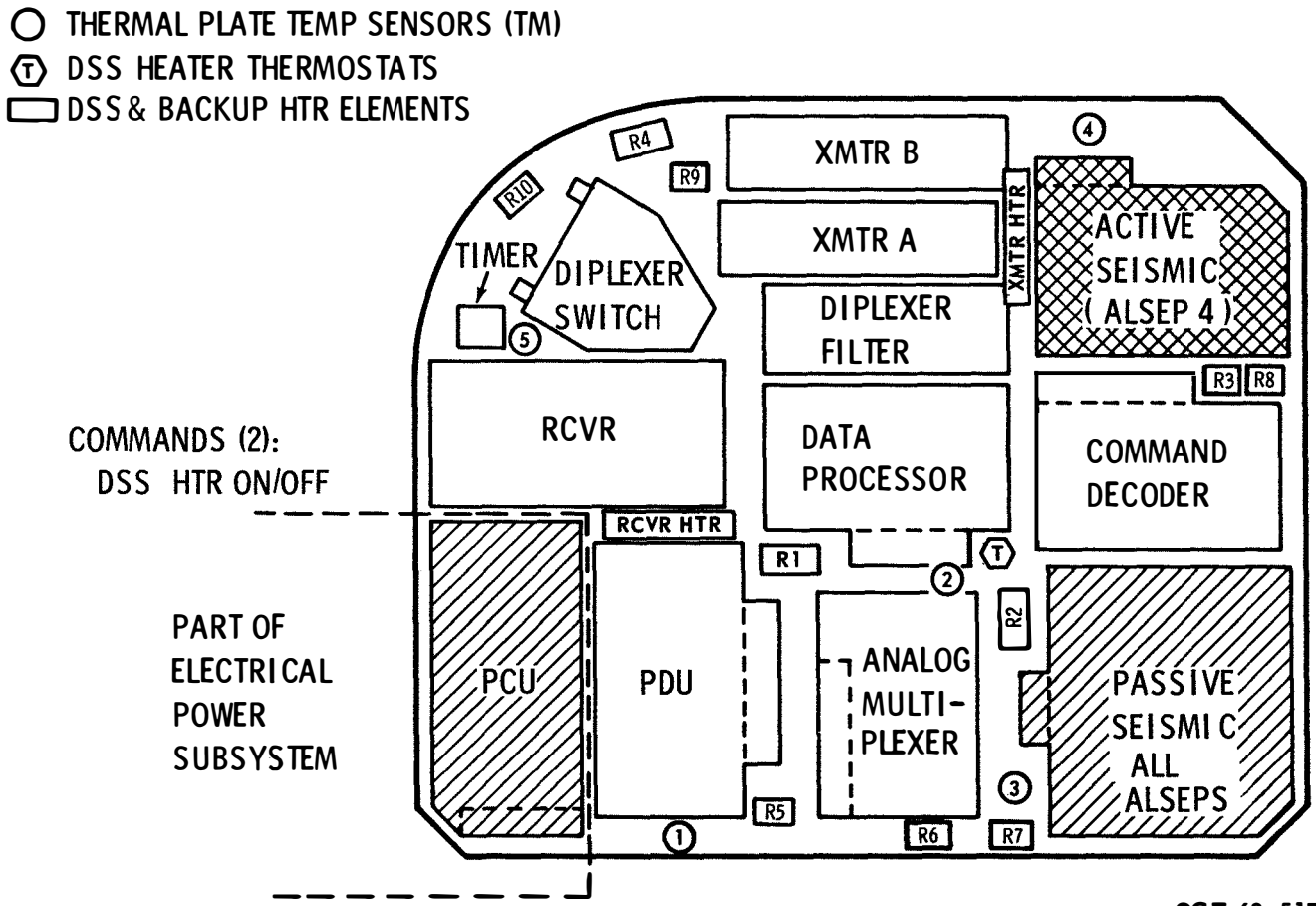

OCT 68 5178.3.13

ANTENNA AND AIMING MECHANISM

PHYSICAL PARAMETERS

MODIFIED AXIAL HELIX
- 23 IN. LONG x 1.5 IN. DIAM, 15° PITCH
- 5 IN. GROUND PLANE WITH 2 IN. CYLINDRICAL SKIRT
- EARTH WT, LB: 1.28 INC CABLE

PERFORMANCE

RIGHT HAND CIRC. POLARIZED

	XMTR	RCV
GAIN ON BORESIGHT, db	15.2	14.7
GAIN AT ± 27°, db	11.5	11.0

ANTENNA

AIMING MECHANISM

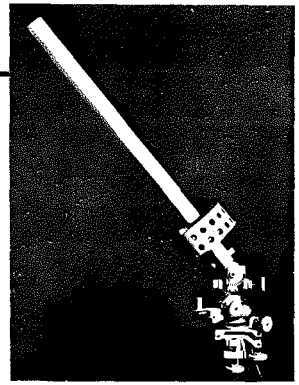

PHYSICAL PARAMETERS

SIZE, IN: 10.8 x 6.0 x 4.7

EARTH WT, LB: 2.00

(INC IN STRUCTURE/THERMAL)

DEPLOYMENT OPERATIONS

SET COARSE & FINE ELEV } TABLE PLUS
SET COARSE & FINE AZ } VOICE BACKUP

LEVEL, ALIGN SHADOW, RECHECK LEVEL

APPROX TIME, 9 MIN

KEY FEATURES

RANGE OF ADJUSTMENT: AZIMUTH ± 90°, ELEVATION ± 50° WRT VERTICAL, LEVEL ± 6°, SUN ± 15° WRT MAST

MAX. ERRORS : 0.99°, DUE TO MFG, MOUNTING, THERMAL DISTORTION, & BACKLASH

DATA SUBSYSTEM CHARACTERISTICS

COMPONENTS

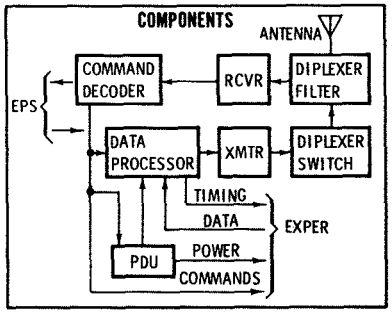

PHYSICAL PARAMETERS

	SIZE, IN.	EARTH WT, LB	POWER, W
DIPLEXER FILTER	6.88 x 2.5 x 2.5	0.90	–
RECEIVER	8 x 4 x 1.75 *	1.84	1.32 MAX
DECODER	6.25 x 3.94 x 2.8 *	2.70	1.40 MAX
DIPLEXER SWITCH	4.5 x 4 x 1.3	1.28	0.15 **
TRANSMITTERS (2)	7.5 x 2.0 x 1.5 (ea)	1.13 (ea)	9.50 MAX (ea)
DATA PROCESSOR (A)	5.9 x 4.2 x 2.62	2.20	1.44
DATA PROCESSOR (0)	6.25 x 3.94 x 2.8 *	3.03	0.50
PDU	7.25 x 4.0 x 2.8	2.36	1.75
	TOTAL	16.57	15.91

* NOT INC CONNECTOR
** FOR XMTR "Y"

(NOT INC ANTENNA)

COMMUNICATIONS

COMMANDS:
- 12 FOR EXPER PWR OPER/STBY/OFF
- 13 SPECIAL CMDs FOR:
  - BIT RATE (3)
  - DSS PROC SEL (2)
  - XMTR SEL (2)
  - XMTR ON/OFF (2)
  - TIMER OUT ACCPT/INHIB (2)

DATA:
- 24 ANALOG ENG PARAMETERS
- 2 ANALOG SIGNALS FOR PDU SWITCHES (EXPER STBY)
- SAMPLED ONCE EVERY 54-SEC ALSEP SEQUENCE
- ADDITIONAL WORD IN DATA FORMAT PROVIDED FOR "CMD AS RCVD" & "CMD MAP"

DISPLAY: ANALOG CHARTS OR TABULAR PRINT/TV PLUS EVENT LIGHTS

KEY FEATURES

MODULATION: UPLINK, 1 & 2 KHz BI-PHASE
DOWNLINK, PCM SPLIT-PHASE

REDUNDANCY:

RCVR	AT CIRCUIT LEVEL	
CMD DECODERS	ESSENTIALLY DUAL ("A" & "B") WITH INDIVIDUAL ADDRESSES	
DATA PROCESSORS	ESSENTIALLY DUAL ("X" & "Y")	SELECTED BY CMD*
XMTR	COMPLETE DUAL ("A" & "B") WITH ONE IN STBY	SELECTED BY CMD*

* EITHER PROCESSOR CAN BE USED WITH EITHER XMTR

- THERMAL INTEGRITY: IF XMTR OR RCVR SWITCH OFF, EQUIVALENT HEATERS AUTOMATICALLY SWITCH ON
- TIMER: 2-YR TIMER ALSO SUPPLIES DELAYED (PROGRAMMED) COMMANDS TO ALLOW LIMITED OPERATIONAL CAPABILITY IN CASE OF UPLINK (RCVR, ETC.) MALFUNCTION
- ASTRONAUT SWITCHES PROVIDE BACKUP CAPABILITY TO TURN ALSEP ON IN CASE OF UPLINK MALFUNCTION

PERFORMANCE

XMTR: 1 W MIN, DIFFERENT FREQUENCIES FOR EACH ALSEP
STABILITY, LONG-TERM: $\pm 0.0025\%$/YEAR
SHORT-TERM: 2×10^{-10} PARTS/SEC

RCVR: 2119 MHz $\pm 0.001\%$

CMD DECODER: 100 DIFFERENT CMDs, UNIQUE ADDRESSES FOR EACH ALSEP

DATA PROCESSOR: NORMAL BIT RATE (NBR), 1.06 KBPS
LBR, 0.53 KBPS
HBR (ACTIVE SEISMIC), 10.6 KBPS FORMATTED BY ASE
NORMAL & LOW FRAME, 64 TEN-BIT WORDS (MSB FIRST)
ADC, 8 BITS PARALLEL OUT (0 TO 5V IN.), $\pm 0.3\%$ ACCURACY

PDU: INCLUDES ANALOG SIGNAL CONDITIONERS

ELECTRICAL POWER SUBSYSTEM

- RADIOISOTOPE THERMOELECTRIC GENERATOR (RTG)
- POWER MANAGEMENT REQUIREMENTS
- POWER CONDITIONING UNIT (PCU)
- POWER DISSIPATION RESISTORS (PDR)
- CIRCUIT & SYSTEM PROTECTION
- FUEL CASK & MOUNTING
- RTG/ASTRONAUT INTERFACE

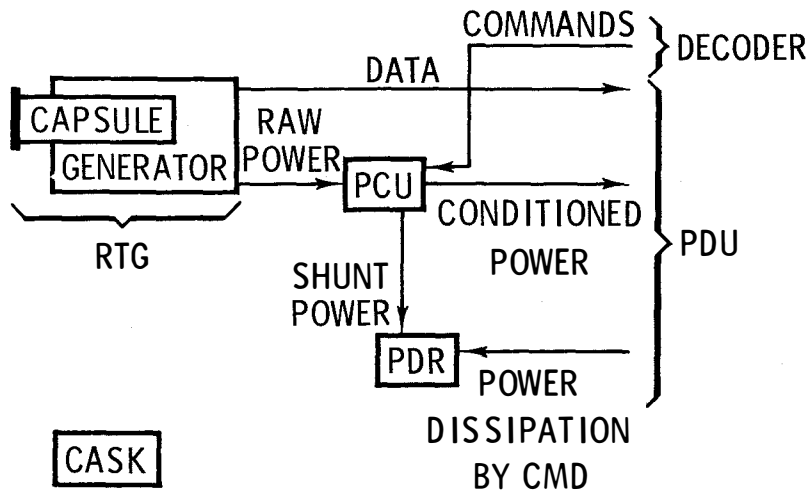

NOV 67 5178.3.16

RTG CUTAWAY

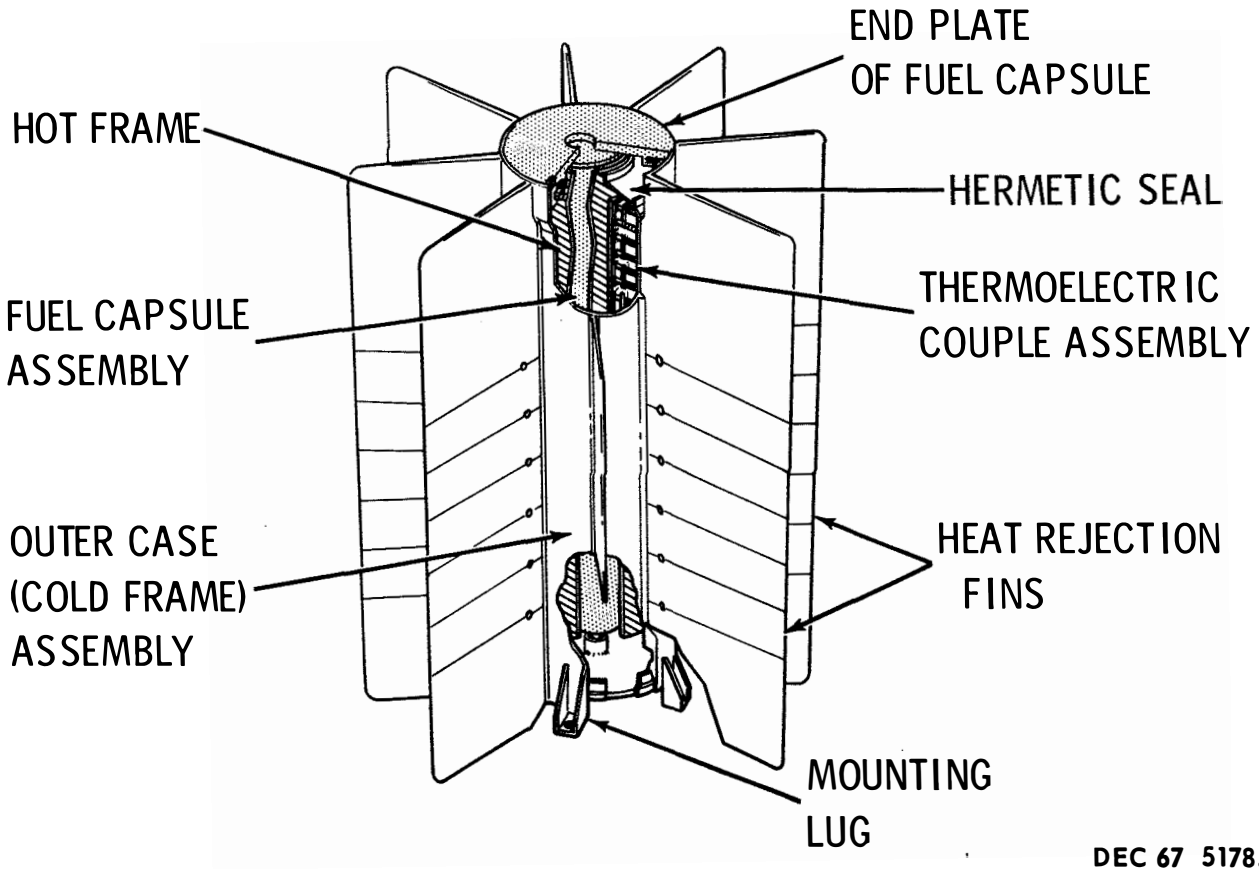

DEC 67 5178.3.17

RADIOISOTOPE THERMOELECTRIC GENERATOR

KEY FEATURES

FUEL: PU 238, 90- YR HALF LIFE, GENERATOR OUTPUT MAY DECREASE WITH TIME DUE TO DECREASED THERMOELECTRIC PERF

THERMOELECTRIC: LEAD TELLURIDE, PREVIOUSLY USED AT 900°- 950° F HOT JUNCTION, TESTED TO 1250° F, MELTS AT 1600° F

ATMOSPHERE: ≈25 PSIA ARGON AT OPER TEMP (< 15 PSIA AT ROOM TEMP); LEAD TELLURIDE OXIDIZES IN AIR & SUBLIMES IN HARD VACUUM

RE-ENTRY CRITERION: INTACT; FACTOR IN CASK DESIGN

PHYSICAL PARAMETERS

	SIZE, IN.	EARTH WT, LB
GENERATOR	16 DIAM x 18 HIGH	28.00
CAPSULE	2.6 DIAM* x 17 HIGH	14.75

* NOT INC END PLATE

PERFORMANCE

OUTPUT POWER: 56.2W (ONE YR) & UP TO 74 W

OUTPUT VOLTAGE: 16 VDC (NOMINAL)

CURRENT: 4 AMP (APPROX)

OVERALL EFFICIENCY: 4% (APPROX)

HOT JUNCTION TEMP: 1100° F MAX *

COLD JUNCTION TEMP: 600° F MAX *

FUEL CAPSULE THERMAL OUTPUT: 1430 TO 1520 W

FUEL CLAD TEMP : 1390° F MAX

* LUNAR DAY (NIGHT PERF NEARLY SAME)

COMPONENTS

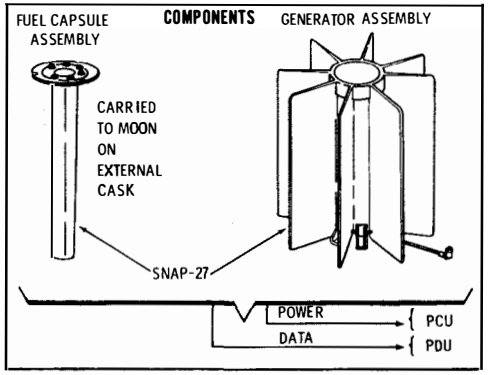

COMMUNICATIONS

COMMANDS: NO RTG CMDs

DATA:
6 ANALOG PARAMETERS (TEMPS)
EACH SAMPLED ONCE EVERY
54-SEC ALSEP SEQUENCE

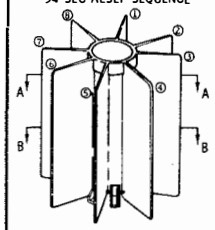

NOTE: AR-05 IS ACTUALLY ON FIN, NEAR COLD FRAME

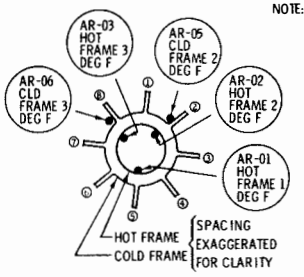

SECTION A-A
(≈13 IN. FROM BOTTOM)

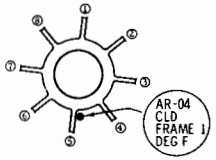

SECTION B-B
(≈6 IN. FROM BOTTOM)

DISPLAY: ANALOG CHARTS, METERS, PRINTER, OR TV

OCT 68 5178.3.18

RTG WARM-UP CYCLE

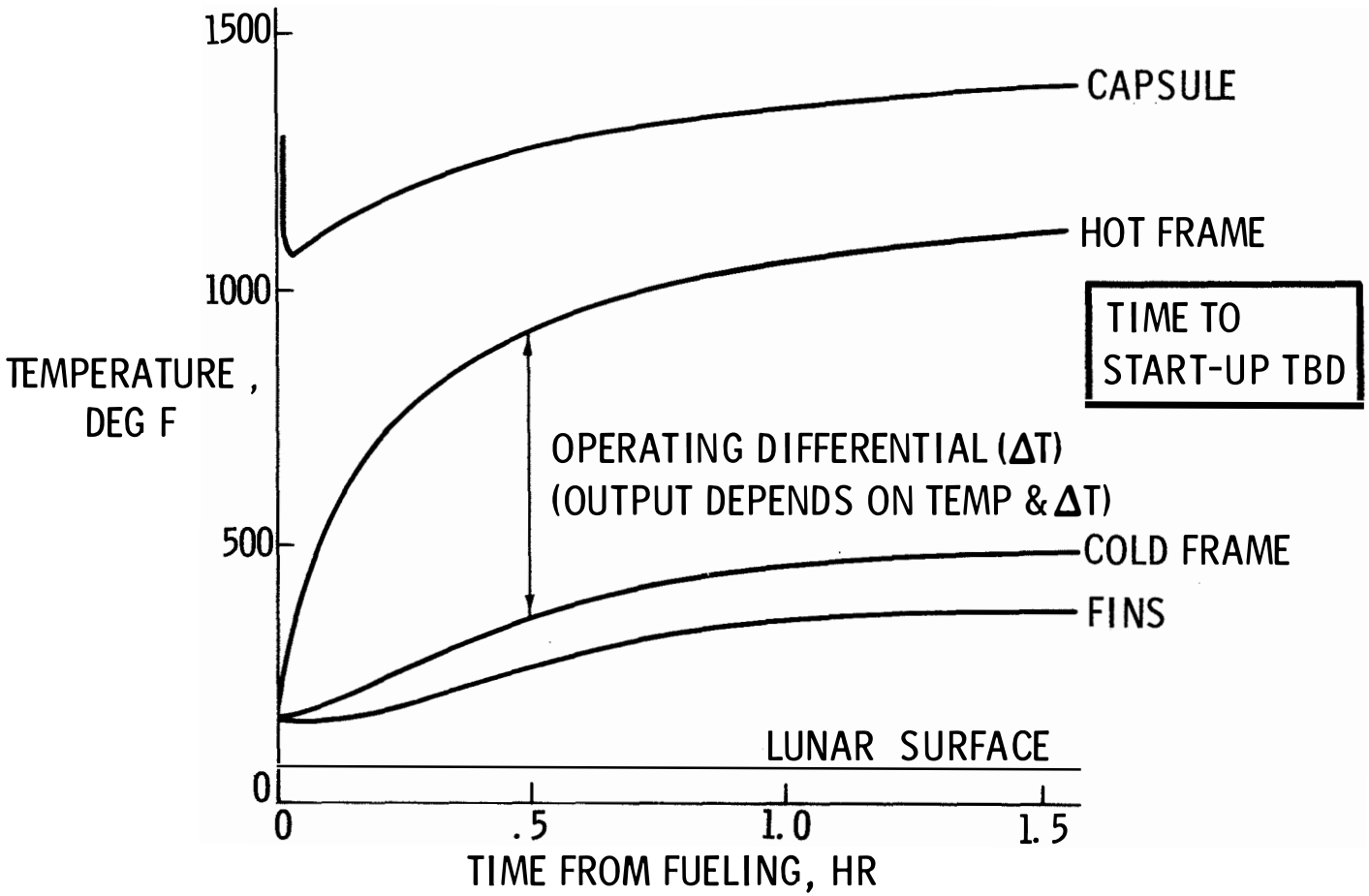

NOV 67 5178.3.19

POWER MANAGEMENT REQUIREMENTS

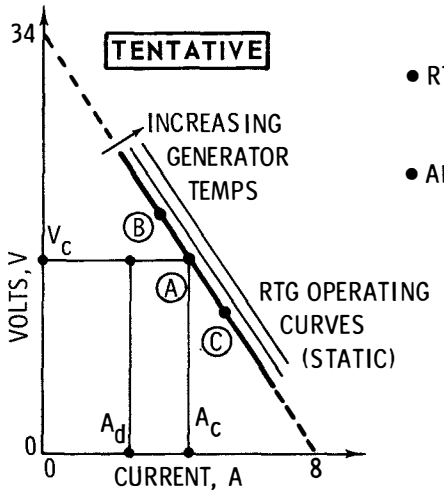

- RTG NOT LIKE SOLAR CELL/FUEL CELL/BATTERY SYSTEMS
  - STEEP CURVE OF V VS. A
  - NO SOURCE OR SINK (ALL POWER USED WHEN GENERATED)
- ALSEP USES LOAD ADJUSTMENT PCU TO MINIMIZE EMI
  - MONITORS PCU INPUT VOLTAGE, PROPORTIONAL TO RTG OUTPUT VOLTAGE Ⓐ, Ⓑ, Ⓒ
  - ADDS VARIABLE LOAD TO DEMAND LOAD, A_d, BRINGING CURRENT UP TO "CONTROL" VALUE, A_c, THUS MAINTAINING "CONTROL" VOLTAGE, V_c

CONDITION	REQUIREMENT	RESOLUTION
NON-OPERATING	SHORT-CIRCUIT, TO KEEP THERMOELECTRIC COOL	RTG CABLE HAS SHORTING PLUG (WITH AMMETER) & SWITCH FOR TURN-ON AFTER CONNECTION
INITIALIZATION	DIGITAL ELECTRONICS NEED FAST RISE TO A STABLE CONDITION	PCU SENSES WHEN OUTPUT REACHES ACCEPTABLE LEVEL WITH RESISTIVE LOAD Ⓑ & THEN STARTS OSCILLATOR TO SUPPLY ALL USERS Ⓐ
OPERATIONAL CONTINGENCIES	SYSTEM MUST PRECLUDE OVERLOADS AND UNDERLOADS AT RTG INTERFACE	PCU PROVIDES WIDE RANGE (≈40 W) OF SHUNT REGULATION; CIRCUIT BREAKERS, RIPPLE-OFF, & GROUND COMMAND POWER MANAGEMENT PROCEDURES (SWITCHABLE LOADS)

APR 69 5178.3.20

POWER CONDITIONING UNIT

COMPONENTS

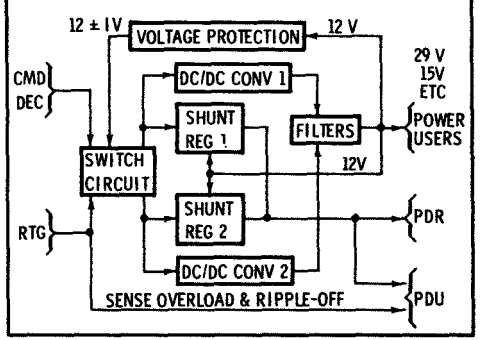

PHYSICAL PARAMETERS

SIZE, IN.: 8.4 x 4.2 x 2.8

EARTH WT, LB: 4.6

POWER: DISSIPATION INSIDE PCU IS A FUNCTION OF OVERALL DISSIPATION TO MAINTAIN RTG OUTPUT VOLTAGE. AVERAGE 25% INSIDE & 75% IN PDR

COMMUNICATIONS

COMMANDS:
- 2 BASIC (PCU 1 SEL & PCU 2 SEL)
- 4 OTHERS (APPLY OR REMOVE 2 EXTERNAL LOADS IN PDR)

DATA:
- 8 ANALOG ENG PARAMETERS:
  - PCU INPUT (RTG OUTPUT) VOLTS & AMPS (2)
  - SHUNT REGULATOR CURRENTS (2)
  - PCU TEMPS (4)
- 6 OUTPUT VOLTAGES IN PDU
- SAMPLED ONCE PER 54-SEC ALSEP SEQUENCE

DISPLAY: ANALOG CHART, METERS OR PRINTER/TV

PERFORMANCE

OUTPUT VOLTS	NOMINAL LOAD, AMP	REGULATION:
+29	1.19	± 1% ON ALL
+15	0.08	OUTPUTS
+12	0.30	(REGULATOR OPERATES
+5	0.90	FROM + 12V OUTPUT)
-6	0.05	
-12	0.15	

KEY FEATURES

PCU IS "FIXED-RATIO" CONVERTER; THUS, REGULATION OF 12V LINE REGULATES ALL LINES & MAINTAINS RTG OUTPUT FIXED

PCU PROTECTS RTG (EXAMPLE, AGAINST OPEN CIRCUITS)

PCU REGULATES BY LOAD ADJUSTMENT OVER 40W SWING BUT ADDITIONAL EXTERNAL LOADS (PDR) CAN BE SWITCHED ON/OFF BY COMMAND ; MAY BE DICTATED BY CENTRAL STATION THERMAL BALANCE

PARTIAL REDUNDANCY WITH COMMAND SELECTION (PCU 1 OR PCU 2) PLUS AUTOMATIC SWITCHOVER FROM 1 TO 2 VIA OUT-OF-TOLERANCE SENSOR (VOLTAGE PROTECTION). NO SWITCHBACK, NORMALLY OPERATE WITH PCU 1

CAPACITANCES MAINTAIN VOLTAGES DURING SWITCHOVER

NOV 67 5178.3.21

POWER DISSIPATION RESISTORS

- PART OF POWER MANAGEMENT PROVISIONS
- MOUNTED EXTERNAL TO CENTRAL ELECTRONICS
- TOGETHER WITH EXPERIMENT STANDBY RESISTORS, PROVIDE INITIAL RTG LOADS DURING LUNAR START - UP
- CHARACTERISTICS:

ID	NUMBER OF RESISTORS	RATING, OHMS	FUNCTION
(1, 2, 3)	3 IN PARALLEL	20 (EACH)	PCU 1 SHUNT
(4, 5, 6)	3 IN PARALLEL	20 (EACH)	PCU 2 SHUNT
(8)	1	121	DISSIP R1
(7)	1	64.9	DISSIP R2
	8 TOTAL		

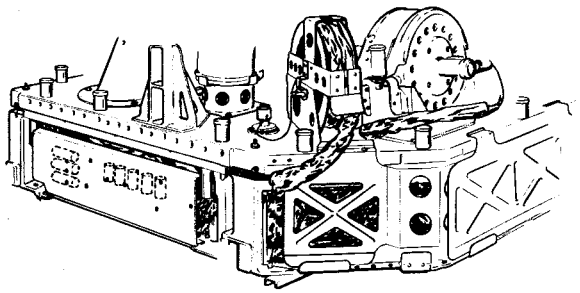

APR 69 5178.3.22

CIRCUIT AND SYSTEM PROTECTION

PHILOSOPHY: PROTECT ALSEP SYSTEM AT THE EXPENSE OF INDIVIDUAL EXPERIMENTS, IF NECESSARY.

ACCOMPLISHED MAINLY BY PDU

MINOR OVERLOADS

- ACCEPTED UNTIL TOTAL EXCEEDS AVAILABLE POWER AS SENSED IN PCU SHUNT AMPS
- MARGINAL SIGNAL CAUSES AUTOMATIC RIPPLE-OFF (SEQUENTIAL) OF EXPER 4, 3 & 1 (SIDE, SWS & PSE IN ALSEP 1). STOPS WHEN MARGIN IS OK
- RIPPLE - OFF SWITCHES FROM OPER TO STBY

MAJOR OVERLOADS

- CIRCUIT BREAKERS 0.50 ± 0.05 AMP IN EXPER OPER (29V) LINES SWITCH TO STBY
- CIRCUIT BREAKERS 0.70 ± 0.14 AMP IN 29V LINE OF XMTR & 0.110 to 0.225 AMP IN 12V LINES OF XMTR & RCVR
- WHEN XMTR OR RCVR GO OFF, EQUIVALENT HEATERS ARE SWITCHED ON
- FUSES 0.50 AMP IN EXPER STBY (HEATER) 29V LINES & 0.25 AMP IN DUST DETECTOR +12V & -12V LINES

RESET: TIMER AUTOMATICALLY ATTEMPTS RESET OF RCVR & EXPER 4 EVERY 12 HRS (EXPER 4 IS CONTINGENCY PROVISION FOR NG UPLINK)
OTHER EXPER & XMTR RESET BY COMMAND ONLY

DEMAND ANALYSIS: OPERATIONAL POWER MANAGEMENT INCLUDES MONITORING POWER RESERVE (PCU SHUNT AMPS) VIA TM & SWITCHING PDR ON/OFF

UNDERLOAD: IF PCU 1 CANNOT ADD ENOUGH LOAD, SWITCHOVER TO PCU 2 OCCURS

FUEL CASK AND MOUNTING

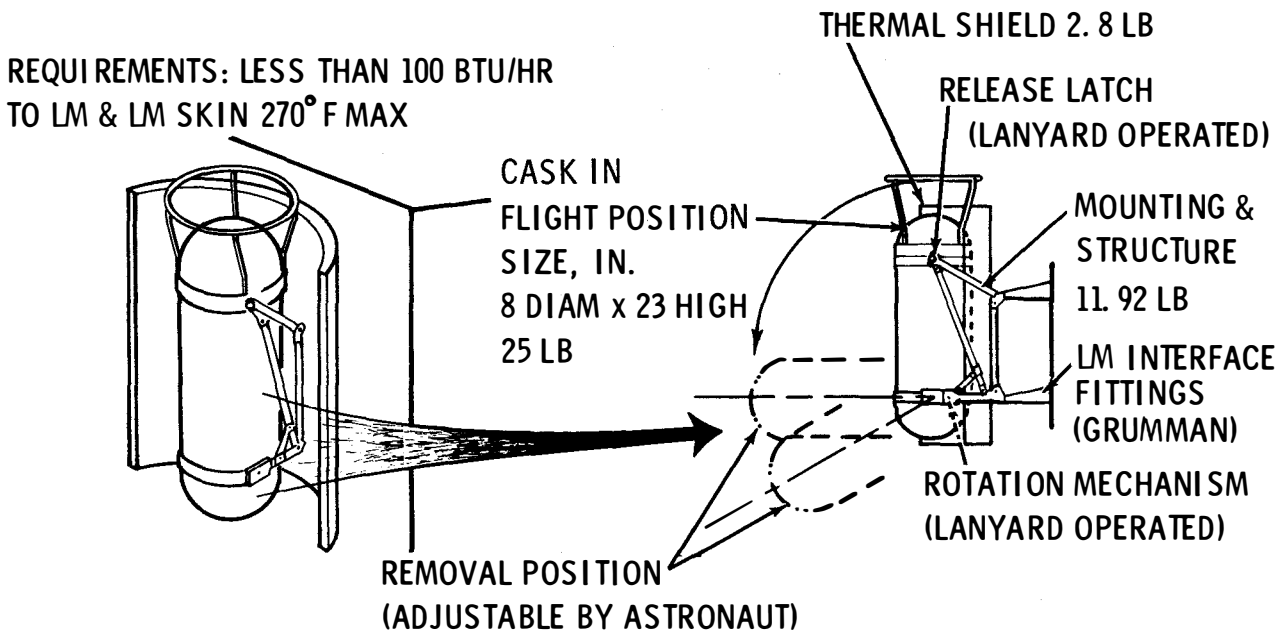

SUMMARY OF EARTH WT

POWER SUBSYSTEM	
CASK	25.0 LB
NOT INC 15.0 LB FUEL CAPSULE	

STRUCTURE/THERMAL SUBSYSTEM	
THERMAL SHIELD	2.80 LB
MTG & STRUCTURE	11.92
MISC (ASTRO PROTECT)	5.28
TOTAL	20.0 LB

OPERATIONS

RELEASE LATCHES AND DOME LOCK, ROTATE CASK, UNSCREW CASK DOME (DOME REMOVAL TOOL), TRANSFER FUEL CAPSULE (FUEL TRANSFER TOOL) APPROX TIME 3 MIN, INC IN PRE-TRAVERSE TOTAL

APR 69 5178.3.24

RTG/ASTRONAUT INTERFACE

CONSTRAINT	RESOLUTION
THERMAL: • NO SUIT CONTACT WITH SURFACES MORE THAN 250°F • MINIMIZE HEAT LOAD ON SUIT COOLING EQUIP	• THERMAL BARRIER (SMALL DOOR) PROTECTION WHILE AT SEQ BAY • LANYARDS FOR CASK ROTATION & DOME LOCK • TOOL FOR DOME REMOVAL • TOOL FOR FUEL TRANSFER, CASK TO GENERATOR • SUBPACKAGE 2 CARRY PLACES RTG AWAY FROM SUIT
NUCLEAR: • NO HAZARDOUS DOSE	• PU 238 IS α EMITTER • α PARTICLES ARE ENTIRELY ABSORBED IN HEAT GENERATION • ONLY SECONDARY TYPES (γ & NEUTRONS) GET OUT • LOW EXTERNAL FIELD, VERY LOW DOSE LEVEL
ELECTRICAL: • NO EXPOSED CHARGED CONTACTS	• RTG CABLE HAS SHORTING SWITCH IN CONNECTOR • ASTRONAUT READS AMMETER, REMOVES DUST COVERS, ENGAGES CONNECTOR, & ACTIVATES SWITCH

OPERATIONS

PREPARE CASK FOR TRANSFER, 2 MIN; TRANSFER FUEL CAPSULE CASK TO GENERATOR, 1 MIN; DEPLOY SUBPACKAGE 2, UNREEL CABLE & MAKE CONNECTION, 2 MIN (ALL TIMES ARE APPROX)

APR 69 5178.3.25

APOLLO LUNAR HAND TOOLS

GEOLOGIC SAMPLING TOOLS

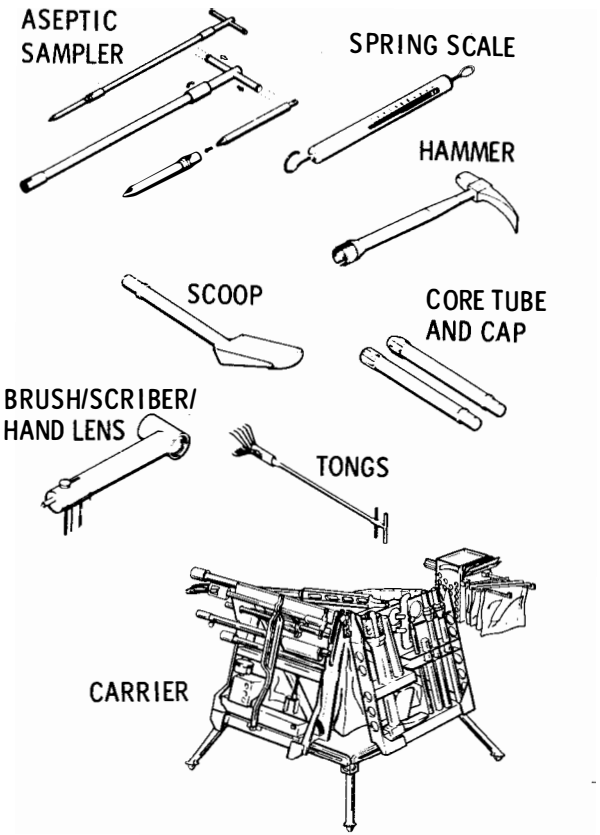

SURVEYING & PHOTOGRAPHIC INSTRUMENTS

TENTATIVE

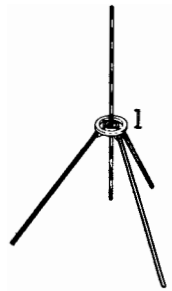

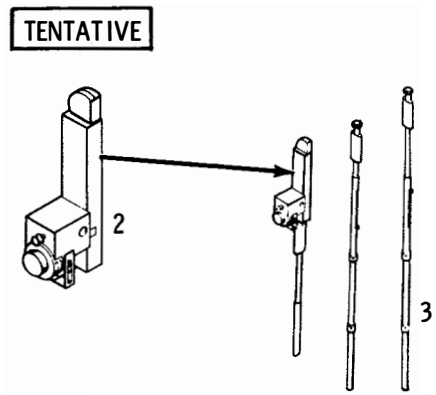

EARTH WT, 17.5 LB

GEOLOGICAL TASKS WILL BE INDEPENDENT OF ALSEP DEPLOYMENT TASKS (NOT INC IN ALSEP TIME-LINE)

1 GNOMON
2 SURVEYING INSTRUMENT
3 INSTRUMENT STAFF

APR 69 5178.3.26

PASSIVE SEISMIC CHARACTERISTICS

COMPONENTS

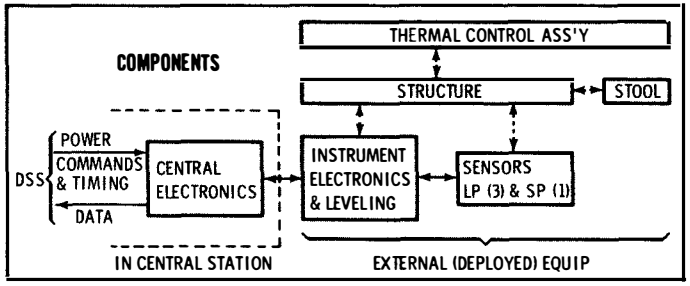

OPERATIONS

DEPLOYMENT

- LOCATE 10 FT FROM CENTRAL STATION
- PLACE STOOL
- SET INSTRUMENT
- ROUGH LEVEL $\pm 5^\circ$
- ORIENT $\pm 20^\circ$ WRT SHADOW (SCIENTIFIC)
- UNFOLD SHROUD
- REPORT ALIGN $\pm 5^\circ$ WRT SHADOW

APPROX TIME, 3 MIN

POST DEPLOYMENT

- TURN ON (OPER) PRE-ASCENT
- UNCAGE (MAY BE PRE-ASCENT)
- FINE LEVEL
- CALIBRATE
- CHANGE GAINS
- RELEVEL AS NECESSARY
- CONTINGENCY CORRECTIVE ACTIONS

COMMUNICATIONS

COMMANDS:

- POWER OPER/STBY/OFF
- 15 SPECIAL CMDs FOR:
  - UNCAGE (1)
  - AUTO & FORCED LEVEL (6)
  - CALIBRATE (2)
  - GAIN CHANGE (3)
  - AUTO & FORCED THERMAL CONTROL (1)
  - COARSE LEVELING SENSOR (1)
  - FILTER BYPASS (1)
- BACKUP FROM TIMER TO UNCAGE & TO CALIBRATE SP

DATA:

- 43 DIGITAL WORDS PER ALSEP FRAME
  712 BPS (AVERAGE)
  98% SCIENCE, 2% HK
  1.2 SEC NORMAL REP RATE
- 8 ANALOG ENG PARAMETERS SAMPLED ONCE PER 54-SEC ALSEP SEQUENCE

DISPLAY:

- SPECIAL SEISMIC ANALOG CHART
- 8-CHANNEL ANALOG (INC 1 TEMP)
- EVENT LIGHTS OR PRINTER/TV

PHYSICAL PARAMETERS

SIZE, IN. { INTERNAL 7.2 x 6.5 x 2.8
EXTERNAL 11.8 DIAM x 15.2 HIGH

EARTH WT, LB: 25 TOTAL

POWER, W: 7.5 (APPROX, MAX)

KEY FEATURES

EARTH CALIBRATION REQUIRES REMOVAL OF 5/6 OF LUNAR MASS

SENSORS CAGED BY PNEUMATIC RESTRAINT, RELEASED BY COMMAND (ARM/FIRE)

SENSORS MOUNTED ON GIMBAL & CAPABLE OF CORRECTING INITIAL $\pm 5^\circ$ ERROR BY LVL COMMANDS

INDIVIDUAL HEATERS FOR CENTRAL ELECTRONICS & INSTRUMENT, "THERMOSTATICALLY" CONTROLLED

APR 69 5178.3.27

PASSIVE SEISMIC SENSORS

LONG PERIOD:

TRIAXIAL SET OF PENDULUMS WITH NATURAL FREQUENCY OF 1/15 CPS
SENSITIVITY 10 mμ (1 mμ GOAL) WITH 80 db DYNAMIC RANGE
CAPACITANCE - TYPE DISPLACEMENT TRANSDUCERS
COIL - MAGNET DAMPING

SHORT PERIOD:

SINGLE VERTICAL SEISMOMETER WITH FREE RESONANCE 1 TO 2 CPS
SENSITIVITY 10 mμ (1 mμ GOAL) WITH 80 db DYNAMIC RANGE
COIL-MAGNET TRANSDUCER

TIDAL OUTPUT:

FEEDBACK FILTER ON LONG-PERIOD DATA
SENSITIVITY: 320μ GAL VERTICAL (8μ GAL GOAL)
0.4 ARC SEC TILT (0.01 ARC SEC GOAL)

MODES OF OPERATION:

INDEPENDENT GAIN CHANGE BY COMMAND ON LP HORIZ,
LP VERTICAL, & SP (0, -10, -20, - 30 db)

BASIC DATA WORD:

10 - BIT WORD FOR EACH SENSOR READING

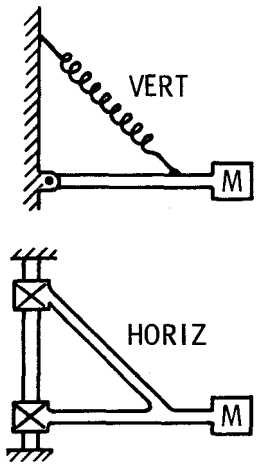

NOV 67 5178.3.28

ACTIVE SEISMIC CHARACTERISTICS

COMPONENTS

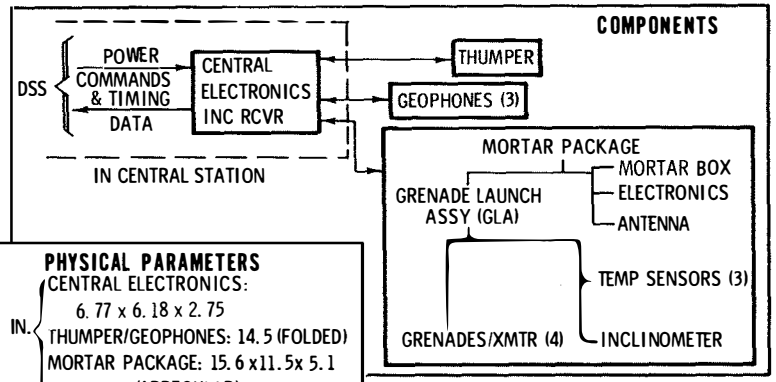

PHYSICAL PARAMETERS

SIZE, IN.
- CENTRAL ELECTRONICS: 6.77 x 6.18 x 2.75
- THUMPER/GEOPHONES: 14.5 (FOLDED)
- MORTAR PACKAGE: 15.6 x 11.5 x 5.1 (IRREGULAR)

EARTH WT, LB: 25.00 TOTAL

POWER, W: 8 (APPROX, OPERATING)

KEY FEATURES

HIGH BIT RATE (10.6 KBPS) OF ASE REQUIRES 85-FT MSFN ANTENNA (ON REQUEST)

EXPLOSIVES HAVE SAFE/ARM PROTECTION FEATURES

GRENADES LAUNCHED TO 500, 1000, 2000 & 5000 FT RANGE FROM GEOPHONES

CHARGE EQUIVALENT TO 150 MILLIGRAM TNT IN THUMPER AND UP TO 1.0 LB TNT IN GRENADE

IMPACT POINT OF GRENADES DETERMINED BY LAUNCH ANGLE, INITIAL LAUNCH VELOCITY, & IMPACT TIME

INDIVIDUAL HEATER FOR MORTAR BOX, "THERMOSTATICALLY" CONTROLLED ELECTRONICALLY

OPERATIONS

DEPLOYMENT & THUMPER

- EMPLACE MORTAR PACKAGE
- PLACE GEOPHONES AT 10, 160 & 310 FT FROM CENTRAL STATION
- ACTIVATE THUMPER EVERY 15 FT
- REMOVE SAFETY RELEASE ASSEMBLY AND ACTUATE SAFE/ARM SWITCHES ON MORTAR BOX

APPROX TIME, 20 MIN

POST DEPLOYMENT

- NOTE GROUND OPERATIONS DURING DEPLOYMENT/THUMPER REQUIRING TURN-ON, GEOPHONE CALIBRATE, & TURN-OFF
- LATER, MONITOR 15 MIN PER WEEK
- NEAR YEAR-END, TURN ON & CALIBRATE GEOPHONES, ARM & FIRE GRENADES
- OTHER COMMANDS AS NECESSARY

COMMUNICATIONS

COMMANDS:

- POWER OPER/STBY/OFF
- ASE HBR ON/OFF
- 7 SPECIAL COMMANDS FOR:
  - GEOPHONE CALIBRATE (1)
  - ARM GRENADES (1)
  - FIRE GRENADES
    - REGULAR (4)
    - SEQUENTIAL (1)

DATA:

- SPECIAL FORMAT (10.6 KBPS) PROVIDES 32 20-BIT WORDS (EACH HAS FOUR 5-BIT SUBWORDS)
- TOTAL 21 PARAMETERS
- 75% SCIENCE 25% HK (INC 5 KEY ALSEP PARAMETERS
- IN NORMAL ALSEP FORMAT, 4 ANALOG ASE PARAMETERS SAMPLED ONCE PER 54-SEC ALSEP SEQUENCE

DISPLAY: DATA COMPRESSED TO 2.4 KBPS LINE LIMIT & DISPLAYED ON ANALOG CHART

ASE DETECTION SYSTEM

GEOPHONE (SENSORS)

- TYPE: ELECTROMAGNETIC
- NATURAL FREQUENCY: 7.5 CPS
- SENSITIVITY: 250 VOLT/METER/SEC
- WEIGHT: 6 OZ EACH SENSOR

AMPLIFIER

- 3 CHANNELS EACH WITH PREAMP, FILTER AND LOG COMPRESSOR
- 80 DB DYNAMIC RANGE LOG COMPRESSED TO 40 DB
- LOG COMPRESSOR TEMPERATURE CONTROLLED

GEOPHONE & AMPLIFIER

- SENSITIVITY: 5 mμ PEAK DISPLACEMENT AT 10 Hz (1 mμ GOAL) AT A SIGNAL TO NOISE RATIO OF 18 db
- BANDWIDTH: 3 TO 250 Hz WITH RESPECT TO VELOCITY

BASIC DATA WORD

- 5-BIT WORD FOR EACH SENSOR READING AT 500 SAMPLES/SEC (EACH CHANNEL)

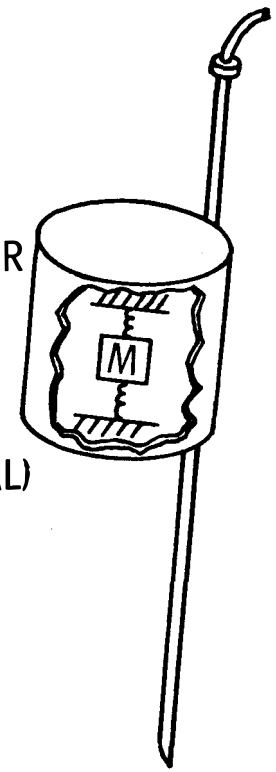

APR 69 5178.3.30

THUMPER CHARACTERISTICS

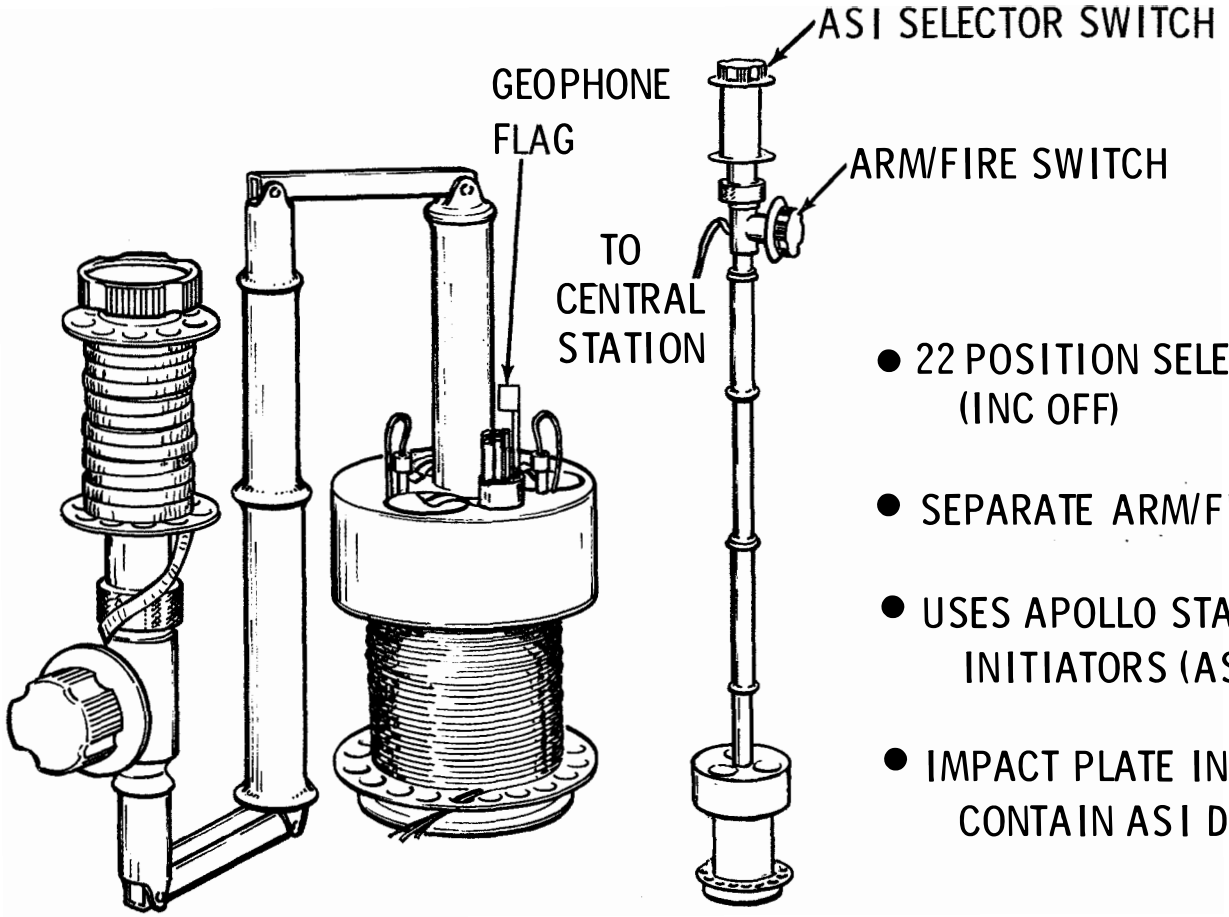

- 22 POSITION SELECTOR SWITCH (INC OFF)
- SEPARATE ARM/FIRE SWITCH
- USES APOLLO STANDARD INITIATORS (ASIs)
- IMPACT PLATE IN LOWER END TO CONTAIN ASI DEBRIS

APR 69 5178.3..31

MAGNETOMETER CHARACTERISTICS

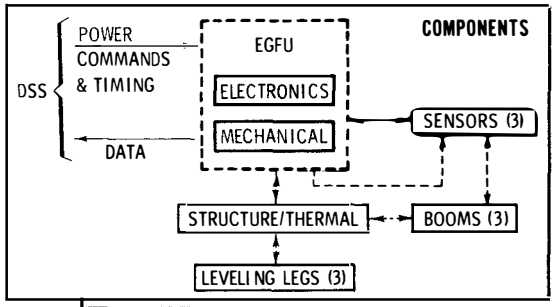

PHYSICAL PARAMETERS

SIZE, IN. (STOWED): 25 x 12 x 11 (IRREGULAR)

EARTH WT, LB: 19.4 W/O CABLE

POWER, W: 5.8 (DAY) / 10.9 (NIGHT) } APPROX

COMMUNICATIONS

COMMANDS:

- POWER OPER/OFF (NO STBY)
- 8 SPECIAL CMDS FOR:
  - SITE SURVEY (1)
  - FLIP/CAL (2)
  - RANGE CHANGE (1)
  - PERCENTAGE OFFSET (2)
  - SELECT THERMAL CONTROL SENSOR (1)
  - FILTER BYPASS (1)

DATA:

- 7 DIGITAL WORDS PER ALSEP FRAME
  116 BPS (AVERAGE)
  86% SCIENCE, 14% HK
  9.6 SEC REP RATE
- NO ANALOG OUTPUTS

DISPLAY: ANALOG CHARTS FOR SCIENCE
EVENT LIGHTS & PRINTER/TV FOR HK

OPERATIONS

DEPLOYMENT

- LOCATE 50 FT FROM CENTRAL STATION (AWAY FROM LM)
- SET AND ADJUST LEVELING LEGS $\pm 3^\circ$
- UNFOLD BOOMS
- ORIENT $+3^\circ$ WRT SHADOW (SCIENTIFIC AND THERMAL)
- REPORT ALIGN $\pm 1^\circ$

APPROX TIME, 8 MIN

POST DEPLOYMENT

- TURN ON (OPER) PRE-ASCENT
- FLIP/CAL
- SITE SURVEY AFTER ASCENT
- CHANGE RANGE
- ADJUST OFFSET
- CONTINGENCY CORRECTIVE ACTIONS

KEY FEATURES

SENSOR CALIBRATION ON EARTH REQUIRES SPECIAL FLUX TANKS TO AVOID SENSOR SATURATION

FLIP/CAL CYCLE MUST BE PERFORMED EVERY 12 HR & EVERY 3° C TEMP CHANGE TO REMOVE DRIFTS (TEMP, ETC.) & AVOID PERMANENT OFFSET OF SENSOR

SITE SURVEY MODE ACTIVATED ONLY ONCE NEAR START OF MISSION (BETWEEN 4TH & 5TH FLIP/CAL ONLY)

CONTAMINATION LIMIT LESS THAN 0.25 GAMMA FROM ALL OTHER ALSEP EQUIP & LM DESCENT STAGE

DURING PRELAUNCH & FLIGHT, LESS THAN 1 GAUSS MAGNETIC EXPOSURE

"THERMOSTATICALLY" CONTROLLED HEATERS IN SENSOR HEADS.

ELECTRONICS MUST OPERATE ESSENTIALLY CONTINUOUSLY

APR 69 5178.3.32

MAGNETOMETER SENSORS

SENSOR TYPE: FLUX GATE

FULL SCALE RANGE: ± 100, ± 200, ± 400 GAMMA (SELECTED BY COMMAND); EARTH'S EQUATORIAL FIELD ≈ 35,000 GAMMA (1 GAUSS = 10^5 GAMMA)

RESOLUTION: 0.2 % FULL SCALE

ACCURACY: 0.5 % FULL SCALE

FREQUENCY RESPONSE: APPROX 1.5 CPS

MODES OF OPERATION: MANY COMBINATIONS OF RANGE & OFFSET

- NORMAL ORIENTATION: ORTHOGONAL
- SITE SURVEY: SPECIAL MODE IN WHICH SENSORS ARE GIMBALLED 90° AND ROTATED SO THAT ALL THREE POINT SEQUENTIALLY ALONG X, Y, & Z AXIS

BASIC DATA WORD: 10-BIT WORD FOR EACH SENSOR READING, INCLUDING 9-BIT VALUE PLUS POLARITY (SIGN) BIT

SOLAR WIND SPECTROMETER CHARACTERISTICS

COMPONENTS

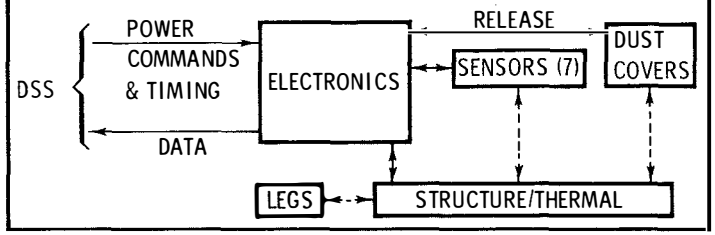

PHYSICAL PARAMETERS

SIZE, IN.: 11 X 9 X 14.75

EARTH WT, LB: 12.25

POWER, W: 6.5 (APPROX)

OPERATIONS

DEPLOYMENT

- LOCATE 13 FT FROM CENTRAL STATION (PREFERABLY N-S)
- EXTEND LEVELING LEGS
- LEVEL ±5°
- ORIENT ±5° WRT SHADOW (SCIENTIFIC & THERMAL)

APPROX TIME, 1 MIN

POST DEPLOYMENT

- TURN ON (OPER) MAY BE PRE-ASCENT
- READ BASE LINE DATA
- AFTER ASCENT, REMOVE DUST COVERS
- HIGH GAIN MODE
  NO OTHER COMMAND FUNCTIONS

COMMUNICATIONS

COMMANDS:

- POWER OPER/STBY/OFF
- 1 SPECIAL CMD FOR DUST COVER REMOVAL (ALSO USED TO OBTAIN HIGH GAIN MODE)

DISPLAY: PRINTER

DATA:

- 4 DIGITAL WORDS PER ALSEP FRAME
  66 BPS (AVERAGE)
  72% SCIENCE, 18% HK
  449 SEC NORMAL REP RATE
- NO ANALOG OUTPUTS

KEY FEATURES

REQUIRES CLEAR HEMISPHERE OF SPACE, OBSTRUCTIONS SUCH AS CENTRAL STATION SHOULD BE LOCATED IN ZONE OF REDUCED SENSOR SENSITIVITY

"THERMOSTATICALLY" CONTROLLED HEATER

JAN 69 5178.3.34

SWS SENSORS

MODES OF OPERATION: INTERNAL
PROGRAM STEPS SENSORS
THROUGH 21 LEVELS
(14 POS & 7 NEG)

BASIC DATA WORD: 8-BIT
WORD FOR EACH SENSOR
READING WITH TWO FLAG
BITS FOR ID

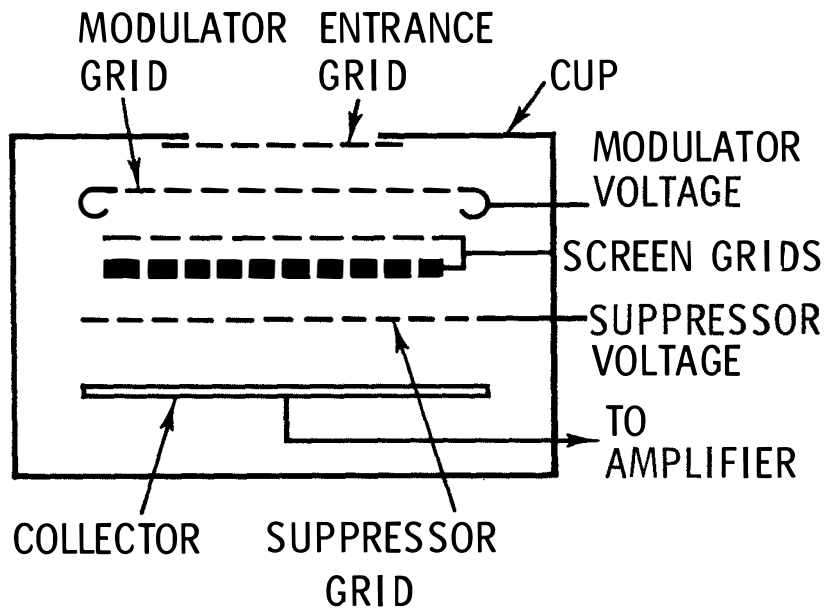

SENSOR TYPE: FARADAY CUPS (7)
FIELD OF VIEW: APPROX 57° EACH
RANGE: ELECTRONS 6 TO 1330 ev, POSITIVE IONS 18 TO 9980 ev
READ OUT AS CURRENTS FROM 10^{-12} TO 10^{-8} amps (LOGARITHMIC)
DIRECTIONALITY: BY
ANALYSIS OF DIFFERENT SENSORS
CAN DETERMINE FLUX DIRECTION ±15°

JAN 69 5178.3.35

SUPRATHERMAL ION DETECTOR CHARACTERISTICS

COMPONENTS

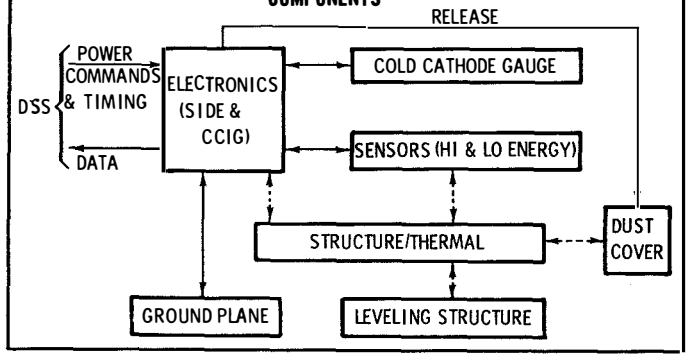

OPERATIONS

DEPLOYMENT

- LOCATE 55 FT FROM CENTRAL STATION (AWAY FROM LSM)
- SET GROUND PLANE
- REMOVE & PLACE (ORIENT) CCIG
- LEVEL SIDE ±5°
- ORIENT ±5° WRT SHADOW (SCIENTIFIC & THERMAL)

APPROX TIME, 4 MIN

POST DEPLOYMENT

- TURN ON (OPER) SIDE POST-ASCENT
- READ BASE LINE DATA
- REMOVE DUST COVER, BREAK CCIG SEAL, READ DATA
- CONTINGENCY CORRECTIVE ACTIONS (CHANGE SIDE MODES)

KEY FEATURES

- HIGH & LOW ENERGY SENSORS CANNOT OPERATE IN ATMOSPHERE (CALIBRATE IN VACUUM)
- CCIG SEALED PRELAUNCH, SQUIB-ACTUATED RELEASE MECHANISM (SEAL BREAK COMMAND)
- CCIG MAGNET SHIELDED TO AVOID INTERFERENCE WITH OTHER INSTRUMENTS
- CONTAMINATION AT SIDE LOCATION MUST BE LESS THAN 0.01 GAUSS & 1 V/M (DC TO 10 Hz)
- DETECTOR ORIENTATION AWAY FROM SUB-EARTH POINT, CCIG ORIFICE AWAY FROM ALSEP, LM & EARTH
- "THERMOSTATICALLY" CONTROLLED HEATER IN DETECTOR PACKAGE

COMMUNICATIONS

COMMANDS:

- POWER OPER/STBY/OFF
- 5 SPECIAL CMDS MULTIPLEXED (4 LOADS & 1 EXECUTE)
- CMDs PERFORM:
  - 2 ONE-TIME FUNCTIONS
    - REMOVE DUST COVER
    - BREAK SEAL
  - 15 REPETITIVE FUNCTIONS
    - CALIBRATE (1)
    - CHANGE MODES (9)
    - TURN EQUIP ON/OFF (5)
- BACKUP FROM TIMER FOR DUST COVER & SEAL BREAK AND PWR TURN ON EVERY 12 HRS (FLT NO. 1)

DATA:

- 5 DIGITAL WORDS PER ALSEP FRAME
  83 BPS (AVERAGE)
  40% SCIENCE, 60% HK
  155 SEC BASIC REP RATE } NORMAL
  3711 SEC FULL CYCLE } NORMAL
- 2 ANALOG CHANNELS OF SCIENCE DATA SAMPLED ONCE PER 54-SEC ALSEP SEQUENCE

DISPLAY: PRIMARILY PRINTER

PHYSICAL PARAMETERS

SIZE, IN.: 15.3 X 13.0 X 4.5

EARTH WT, LB: 19.6

POWER, W: 6.0 (APPROX)

JAN 69 5178.3.36

SIDE SENSORS

	ION DETECTOR		COLD CATHODE GAUGE
SENSOR TYPE	CURVED PLATE ANALYZER*		REDHEAD
FIELD OF VIEW	30° X 6°		NA
RANGE	POSITIVE IONS 10 TO 3500 ev	POSITIVE IONS 0.2 TO 48.6 ev**	10^{-6} TO 10^{-12} TORR (10^{-13} GOAL)
DIRECTIONALITY	DETECTOR AXES 15° OFF VERTICAL REFERENCE (PARALLEL)		ORIFICE HORIZONTAL, PREFERABLY SOUTH
MODES OF OPERATION	PROGRAMMED STEPS, VARIABLE BY COMMAND. ALSO X10 INTEGRATION FOR LOW FLUX LEVELS		THREE OVERLAPPING RANGES AUTOMATICALLY SELECTED BY INTERNAL LOGIC
BASIC SENSOR DATA WORD	2 10-BIT WORDS, EACH LIMITED TO 999 DECIMAL, HENCE MAX PARTICLE COUNT 999,999		8-BIT WORD FOR EACH SENSOR READING, MULTIPLEXED WITH SIDE HK

*VELOCITY SELECTOR (CROSSED ELECTRIC/MAGNETIC FIELDS) ON LOW ENERGY DETECTOR

**1 TO 130 AMU PER UNIT CHARGE

GROUND PLANE STEPS THROUGH 24 VOLTAGE LEVELS (11 POS, 11 NEG, & 2 ZEROS)
± 27.6V, MAX

APR 69 5178.3.37

HEAT FLOW CHARACTERISTICS

COMPONENTS

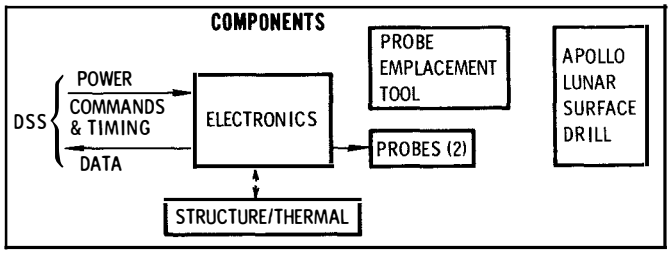

KEY FEATURES

SENSOR CALIBRATION ON EARTH REQUIRES SPECIAL FACILITY
AVOID DISTURBING LUNAR SURFACE REFLECTIVE PROPERTIES AROUND PROBES
REQUIRES RADIATIVE THERMAL COUPLING BETWEEN PROBE & HOLE PLUS
NO THERMAL SHORT-CIRCUIT TO SURFACE
"THERMOSTATICALLY" CONTROLLED HEATER IN ELECTRONICS PACKAGE

PHYSICAL PARAMETERS

(NOT INC DRILL)

SIZE, IN: ELECTRONICS 13 x 9 x 8
PROBES 25.5 x 4.5 x 3.5
(IN PACKAGE)

EARTH WT, LB: 9.7 LB (TOTAL)

POWER, W: 3.9 TO 10.6

OPERATIONS

DEPLOYMENT

- LOCATE ELECTRONICS 30 FT FROM CENTRAL STATION
- LEVEL $\pm 12°$
- ALIGN $\pm 5°$ WRT SHADOW (THERMAL)
- DRILL HOLES (2) 3 METERS DEEP & PLACE PROBES IN BOTTOM OF HOLES USING TOOL
- HOLES 30 FT APART & 16 FT FROM ELECTRONICS

APPROX TIME, 9 MIN, PLUS 30 MIN FOR DRILLING

POST DEPLOYMENT

- TURN ON (OPER) PRE-ASCENT
- READ GRADIENT DATA CONTINUOUSLY EXCEPT DURING CONDUCTIVITY TESTS
- MAKE CONDUCTIVITY TESTS – TIMES FOR UP TO 48 HRS EACH TIME

COMMUNICATIONS

COMMANDS:

- POWER OPER/STBY/OFF
- 10 SPECIAL CMDS FOR:
  - SELECT GRADIENT, HI CONDUCTIVITY, OR LO CONDUCTIVITY MODES (3)
  - SELECT MEASUREMENT SEQUENCE (6)
  - SELECT & ACTIVATE CONDUCTIVITY HTRS (1)

DATA:

- 1 DIGITAL WORD PER ALSEP FRAME (FOR 16 OUT OF EVERY 90 FRAMES)
  3.0 BPS (APPROX)
  65% SCIENCE, 35% HK
  435 SEC REP RATE (FULL SEQUENCE)
- 6 ANALOG ENG PARAMETERS SAMPLED ONCE PER 54 SEC ALSEP SEQUENCE

DISPLAY: X-Y PLOTTER OR PRINT (REQUIRES DATA ANALYSIS)

APR 69 5178.3.38

HEAT FLOW SENSORS

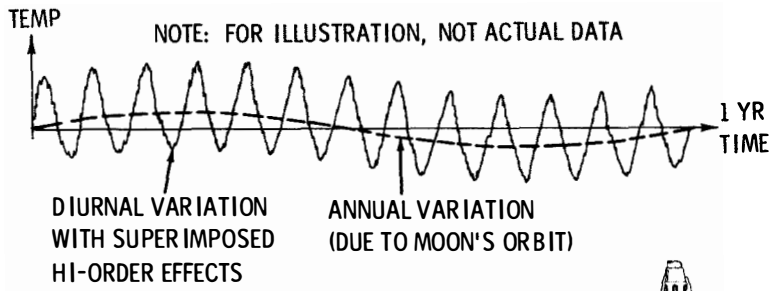

- PROBLEM: TO FIND THE SMALL DC COMPONENT IN A POSSIBLY LARGE AC WAVE

MODES OF OPERATION: MODE/G, MODE/LK, & MODE/HK PLUS MANY MEASUREMENT SEQUENCES

BASIC DATA WORD: 13-BIT OUTPUT OF ADC IN 2 ALSEP WORDS (PLUS ID)

TYPICAL BRIDGE READING (8 ALSEP WORDS)
- (1) + EXCITATION
- (2) + OUTPUT
- (3) - EXCITATION
- (4) - OUTPUT

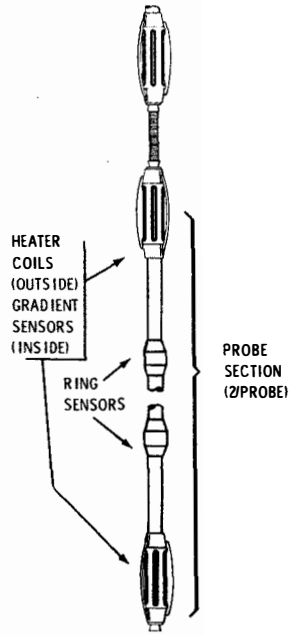

SENSOR TYPE: PLATINUM RESISTOR

SENSOR CIRCUITS:
- SETS OF FOUR SENSORS
- TWO COMBINATIONS (DIFFERENCE & AMBIENT) SELECTED BY INTERNAL LOGIC

DYNAMIC RANGE:
- TEMP DIFFERENCE (BRIDGE)
  - HI SENSITIVITY ± 2° K (200° K TO 250° K)
  - LO SENSITIVITY ± 20° K (200° K TO 250° K)
- AMBIENT TEMP (RESISTANCE)
  - 200°K TO 250°K
- CABLE THERMOCOUPLES (ALONG PROBE CABLES)
  - 90°K TO 350°K (ACCURACY 0.3°C)
- THERMOCOUPLE REF JUNCTION (IN ELECTRONICS)
  - -20° C TO +60° C (ACCURACY 0.1°C)
- CONDUCTIVITY RANGE: 5×10^{-6} TO 1×10^{-3} CAL/CM-SEC-°C

APR 69 5178.3.39

APOLLO LUNAR SURFACE DRILL

TENTATIVE

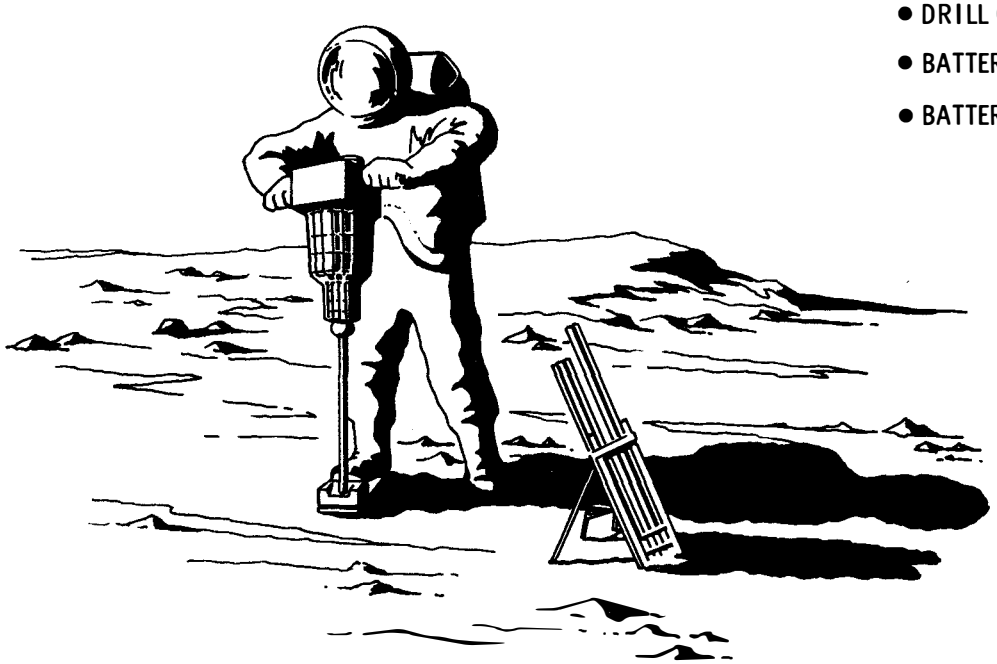

- EARTH WEIGHT, LB: 29.54 (TOTAL)
- STOWED SIZE, IN.: 22.7 X 9.6 X 7 (NOT INC DRILL STRING & CAPS)
- DRILL OPERATED BY SELF-CONTAINED BATTERY
- BATTERY INSTALLED 5 DAYS PRELAUNCH
- BATTERY SHELF LIFE { DRY: 2 YR / ACTIVATED: 30 DAYS
- DRILLING PRINCIPLE: ROTARY – PERCUSSION
- TORQUE REACTION SYSTEM: NONE (MINIMAL VERTICAL & ROTARY REACTION, EVEN IN ROCK)
- DRILLING TIME: 5 TO 15 MIN/HOLE (DEPENDING ON MATERIAL)
- APPROX 40 MIN FOR PREPARATION, DRILL WITHDRAWAL, & ENCASEMENT
- INSTALLATION/REMOVAL OF SHEATH (CASING) IN UNCONSOLIDATED MATERIAL TBD

JAN 69 5178.3.40

CHARGED-PARTICLE EXPERIMENT CHARACTERISTICS

PHYSICAL PARAMETERS

SIZE, IN: 11.3 x 8.5 x 4.5
EARTH WT, LB: 5.8
POWER, W: (APPROX) { 3.0 DAY / 6.1 NIGHT MAX

COMPONENTS

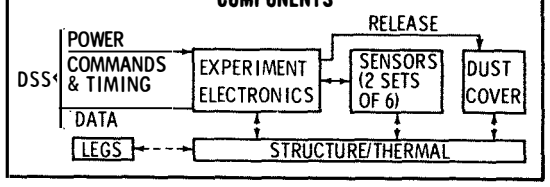

KEY FEATURES

SENSORS CANNOT OPERATE AT ATMOSPHERIC PRESSURE (CALIBRATE IN VACUUM)
THERMOSTATICALLY CONTROLLED HEATER

COMMUNICATIONS

COMMANDS:

- POWER OPER/STBY/OFF
- 8 SPECIAL CMDs FOR:
  - DUST COVER REMOVAL (1)
  - AUTO/CMD THERMAL CONTROL (2)
  - AUTO/CMD VOLTAGE PROGRAM TO SENSOR (3)
  - CHANGE SENSOR GAIN (2)
- BACKUP FROM TIMER TO REMOVE DUST COVER

DATA:

- 6 DIGITAL WORDS PER ALSEP FRAME
  - 99 BPS (APPROX)
  - 97% SCIENCE, 3% HK
  - 19.3 SEC NORMAL REP RATE
- 6 ANALOG ENG PARAMETERS
  - SAMPLED ONCE PER 54-SEC ALSEP SEQUENCE

DISPLAY: PRINTER/TV

OPERATIONS

DEPLOYMENT

- LOCATE 10 FT FROM CENTRAL STATION
- LEVEL ± 2.5
- ALIGN $\pm 2^{\circ}$ WRT SHADOW (SCIENTIFIC & THERMAL)

APPROX TIME, 2 MIN

POST DEPLOYMENT

- TURN ON (OPER) PRE-ASCENT
- READ BASELINE DATA (COVER ON)
- AFTER ASCENT REMOVE DUST COVER
- CONTINGENCY CORRECTIVE ACTIONS

APR 69 5178.3.41

CHARGED-PARTICLE EXPERIMENT SENSOR

SENSOR TYPE: CHANNELTRON® ELECTRON MULTIPLIER
PHYSICAL ANALYZERS
- FIELD OF VIEW: $4^\circ \times 20^\circ$
- ENERGY RANGE: 40 ev TO 70 kev
- FLUX LEVEL: 10^5 TO 10^{10} PARTICLES/CM^2/SEC/STERADIAN

MODES OF OPERATION: INTERNAL PROGRAM STEPS
- DEFLECTION VOLTAGE THROUGH 8 LEVELS
- (±35, ±350, ±3500, BACKGROUND & CAL)

BASIC DATA WORD: 19-BIT COUNTERS FOR EACH
- OF 4 C-TYPE & 20-BIT COUNTERS FOR 1 C-TYPE
- & HELIX

EACH READING COVERED BY 2 ALSEP WORDS
- WITH FLAG (ID) IN 20TH BIT WHEN AVAILABLE

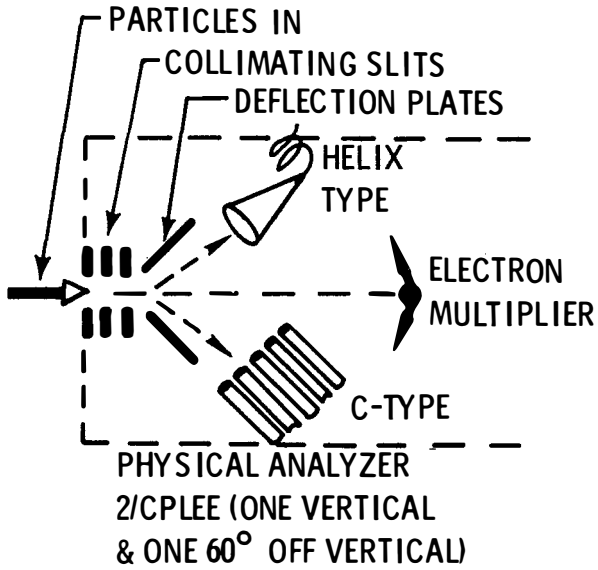

OCT 68 5178.3.42

SEISMIC EXPERIMENT SUMMARY

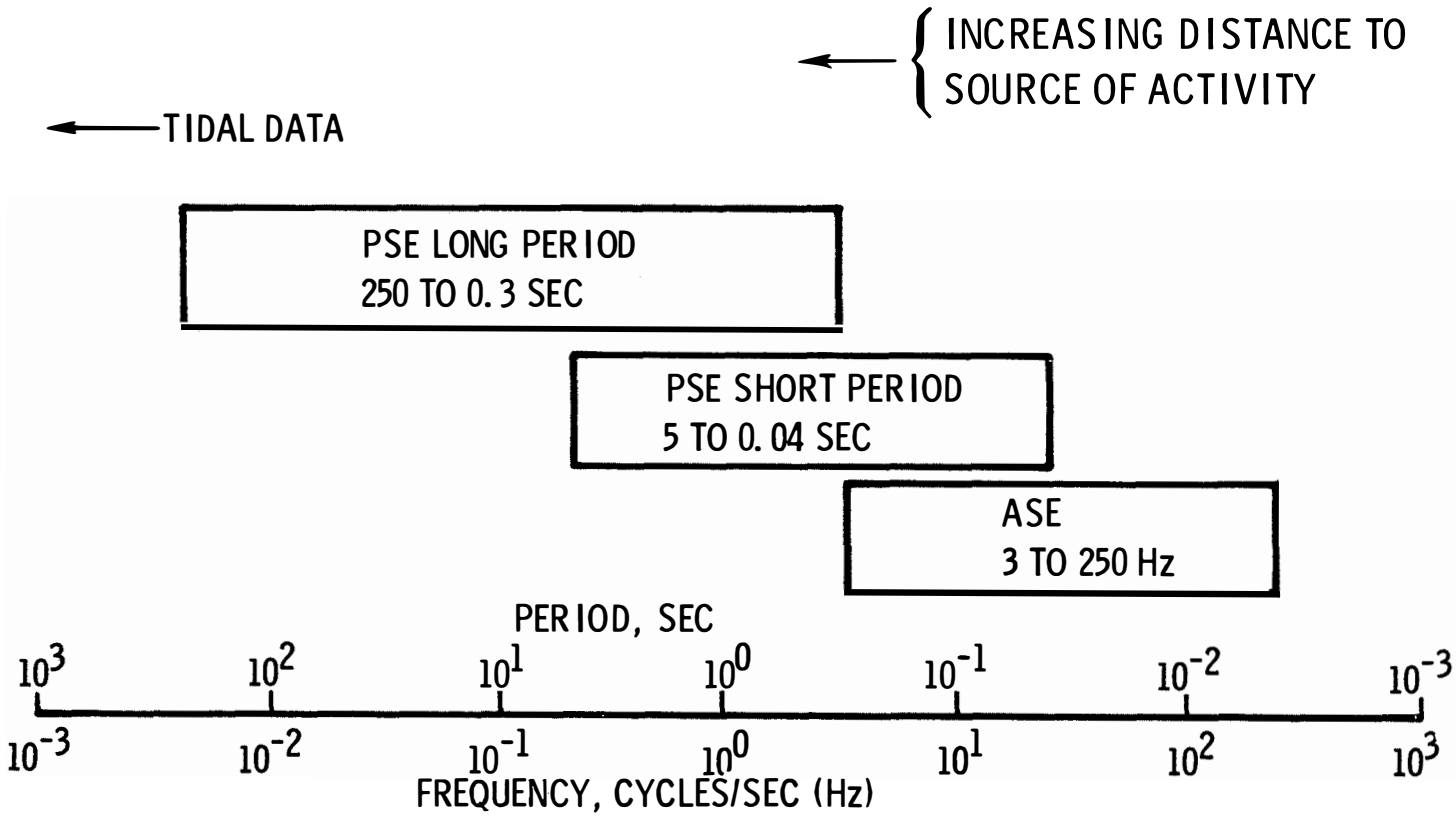

DEC 67 5178.3.43

PARTICLE EXPERIMENTS SUMMARY

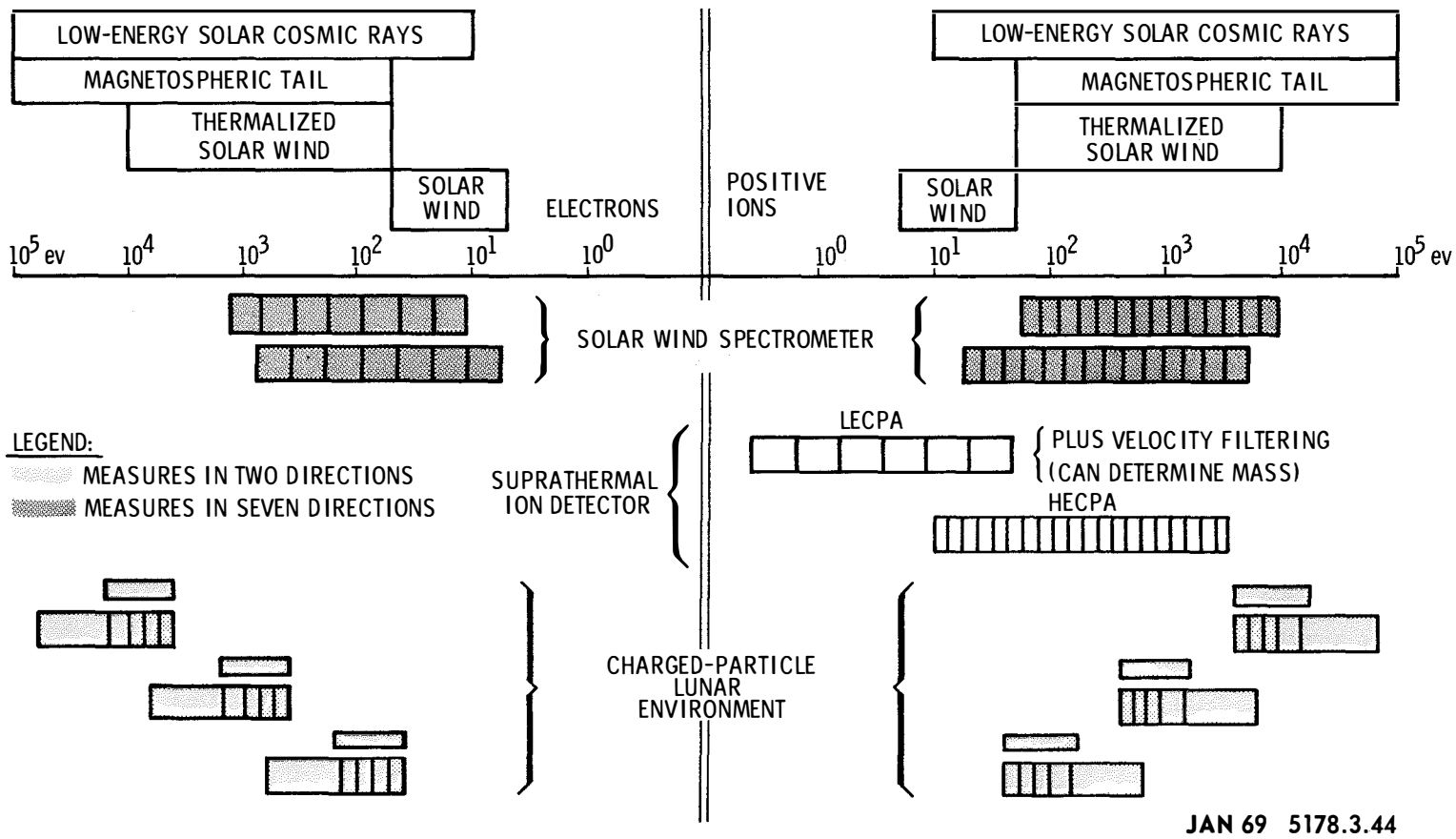

JAN 69 5178.3.44

LEVEL AND ALIGN INDICATORS

BUBBLE

RING ON FACE INDICATES REQUIRED SETTING

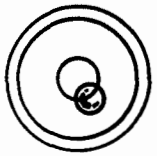

USED ON:

- ANTENNA
- LSM
- SIDE
- CPLEE

PSE HAS BALL

COMPASS

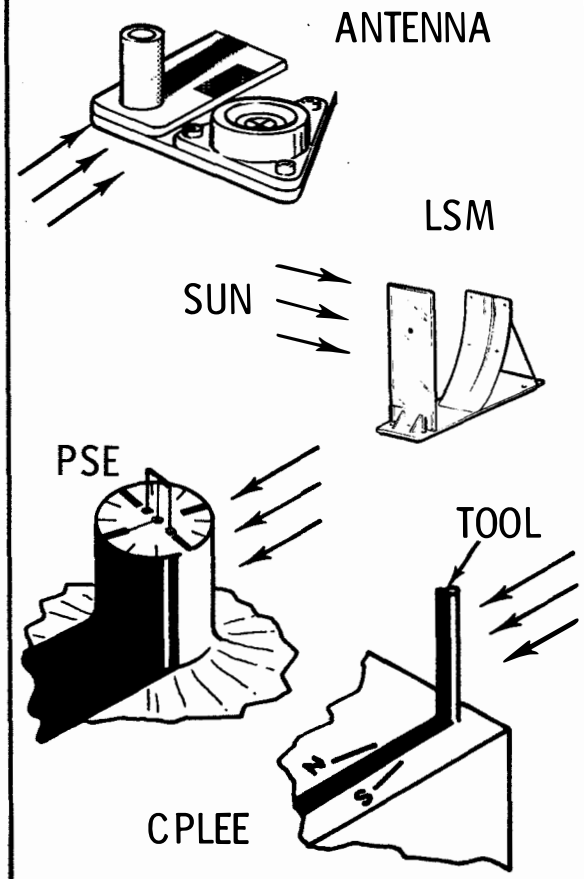

PAINT

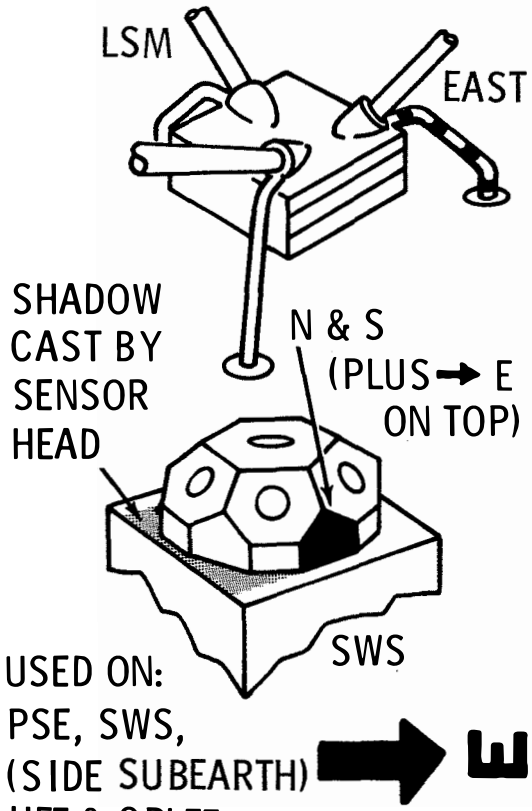

APR 69 5178.3.45

CABLES, REELS AND CONNECTORS

CONDUCTORS (COPPER)
- WIDTH 0.025 IN. } EQUIV #32 AWG
- THICKNESS 0.002 IN. }
- SPACING 0.050 IN. CENTER TO CENTER
- RESISTANCE:

TEMP, °C	OHMS/1000 FT
-175	4.4
20	18.8
125	26.5

- MUTUAL CAPACITANCE: 5 PF/FT

INSULATION ("KAPTON" H-FILM, FEP TEFLON SANDWICH)
- KAPTON: 0.002 IN. THICKNESS (OUTER)
- FEP TEFLON: 0.002 IN. THICKNESS (INNER)
- RESISTANCE: 3×10^6 MEG OHMS/FT

CABLE
- WEIGHT ≈ 0.5 LB/1000 FT/ CONDUCTOR
- ALSEP USES OVER 4000 CONDUCTOR-FT
  (SAVES 10 LB COMPARED TO ROUND CABLE)
- USES MULTIPLE CONDUCTORS IN PARALLEL
  FOR HEAVY CURRENTS
- CONNECT EVERY OTHER LEAD FOR SHIELDING

UNREELS IN BOTH
DIRECTIONS
SIMULTANEOUSLY

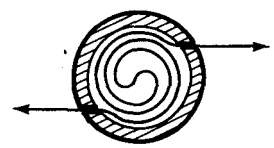

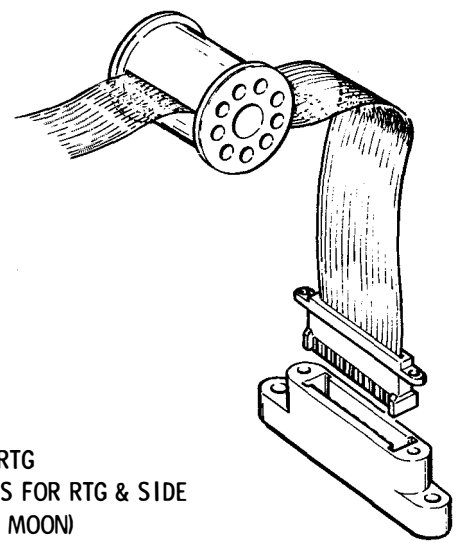

SPECIAL CABLE FOR RTG
SPECIAL CONNECTORS FOR RTG & SIDE
(TO BE MATED ON THE MOON)

JAN 69 5178.3.46

ASTRONAUT PROVISIONS

LEGEND
P = PRIMARY CONSIDERATION
S = SECONDARY CONSIDERATION

ACTIVITY	CONSTRAINTS: SAFETY: BIOMED	TEMP	PUNCTURE	CAPABILITY: MOBILITY	DEXTERITY	VISUAL	COMMENTS
UNLOADING FROM LM	S	P	P	P			THERMAL SHIELD FOR CASK
RTG FUEL TRANSFER		P		P		S	SPECIAL TOOLS
300-FT TRAVERSE	P	P	P	P		P	BARBELL CARRY (SUITCASE BACKUP)
ELECT CONNECTIONS			P		P	P	2(RTG & SIDE)
EQUIP DISASSEMBLY		P	P		P	P	SPECIAL TOOL; BOYD BOLT FASTENER
EXPER CARRY	P		P		S		SPECIAL TOOL
LEVEL & ALIGN				P	P	P	BUBBLE, SUN COMPASS, PAINT
ANTENNA ALIGN	P		P				SPECIAL KNOBS & DIALS;ON MAST
BACKUP SWITCHES				P	P	P	MAINLY BACKUP; TOOL OPERATED

APR 69 5178.3.47

WEIGHT SUMMARY

FOR ALSEP 1

EQUIPMENT	SUBPACKAGE 1	SUBPACKAGE 2	EXTERNAL	TOTAL
STRUCTURE/THERMAL	25.49	21.73		47.22
POWER	5.07	28.62	60.0	93.69
DATA	33.47	2.06		35.53
EXPER CABLES	2.06	1.68		3.74
PSE	23.94	0.17		24.11
LSM	17.55			17.55
SWS	11.68			11.68
SIDE		19.41		19.41
SPECIAL TOOLS		20.00		20.00
TOTAL	119.26	93.67	60.0	272.93

WEIGHT LEFT ON LM= 45 LB

DEC 67 5178.3.48

ALSEP 1 DAY TIME POWER

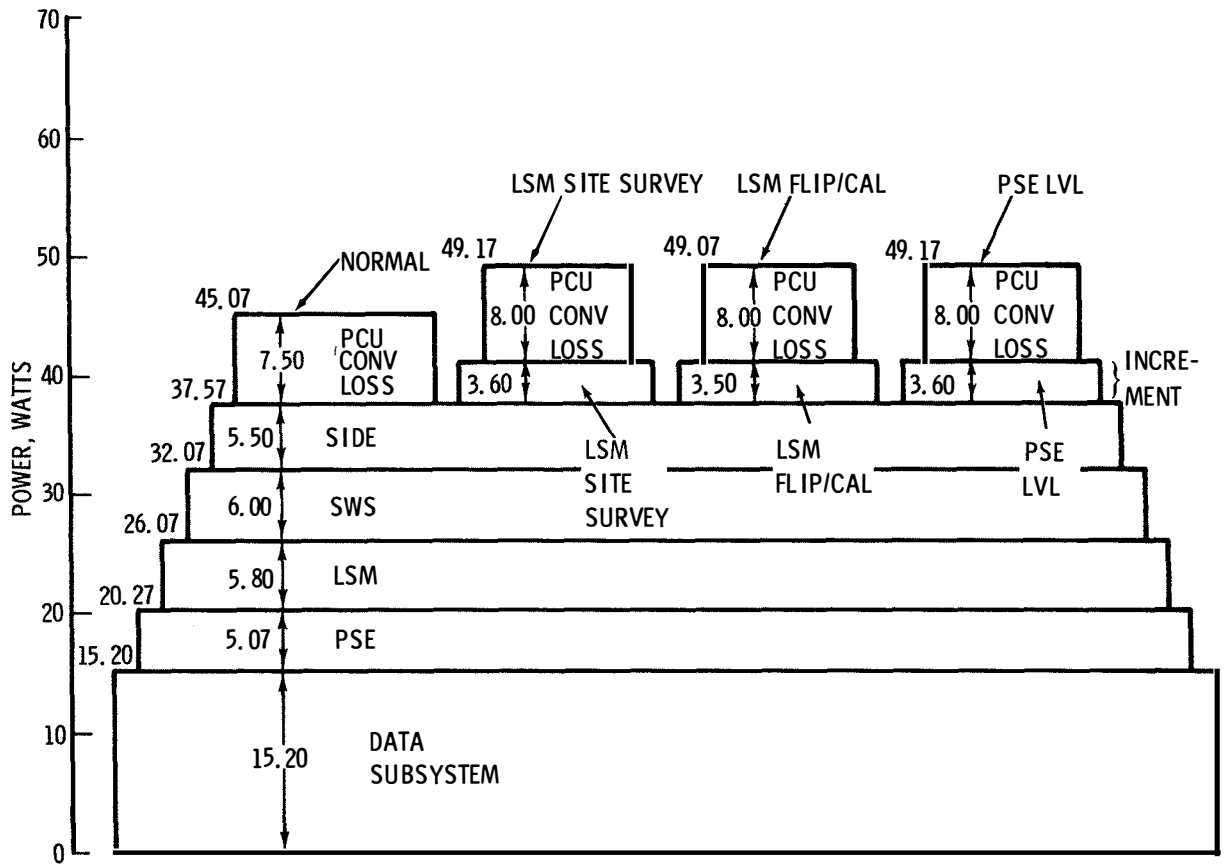

DEC 67 5178.3.49

ALSEP 1 NIGHT POWER

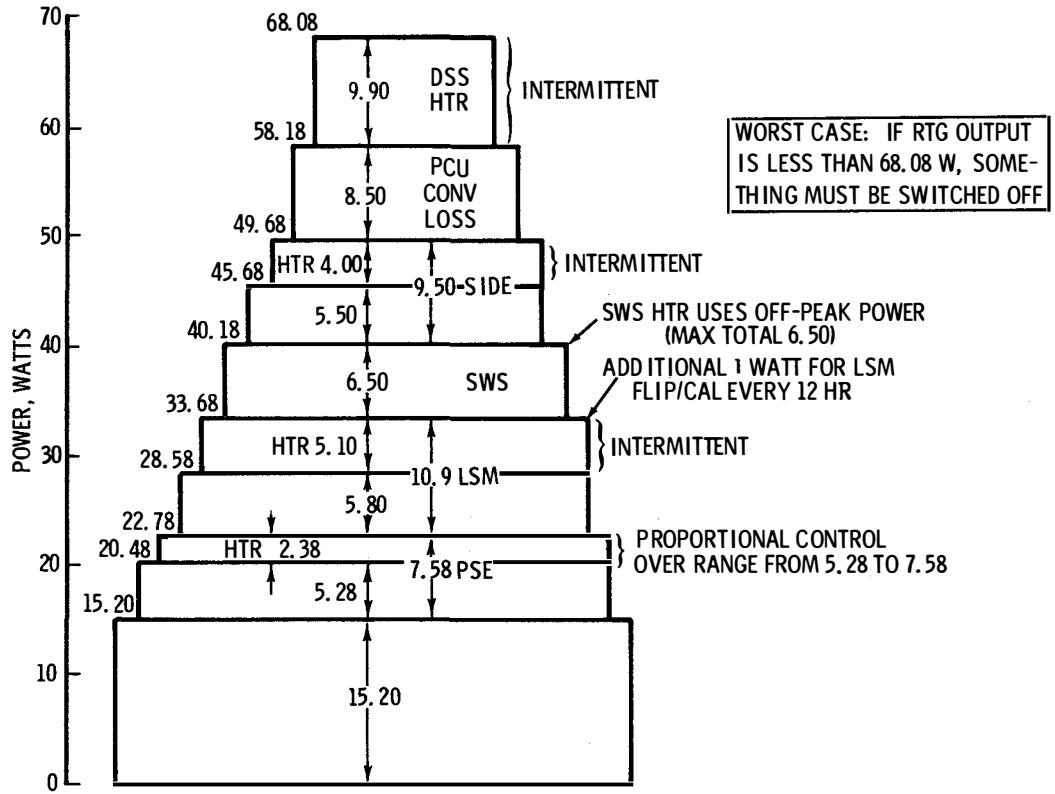

OCT 68 5178.3.50

ALSEP 1 DATA SUMMARY

NORMAL BIT RATE (1.06 KBPS)		S/T	POWER	DSS	PSE	LSM	SWS	SIDE	NOT USED	COMMENTS
CMD	POWER CONTROL	2	4	4	3	3	3	3	3(a)	TOTAL 100
	OTHER OPERATIONS	—	2	9	15	8	1	5	35	
NUMBER OF WORDS	PER ALSEP FRAME	—	—	5(b)	43	7	4	5	—	TOTAL 64(b)
	PER EXPER FRAME	—	—	—	86	7	186	10	—	
REP RATE (SEC)	BASIC FRAME	—	—	0.6	1.2	0.6	28.1	1.2	—	
	COMPLETE CYCLE	—	—	54	1.2	9.6	449	3710	—	
NUMBER OF PARAM-ETERS	SCIENCE	—	—	—	7	3	8	5	—	VARIOUS SETTINGS
	HK, IN EXPER FORMAT	—	—	6(c)	1	25	92	195	—	INC CAL SIGNALS
	HK, IN ALSEP ADC	19	22	24	8(d)	—	—	—	15	TOTAL 90
	SCIENCE, IN ALSEP ADC	—	—	—	—	—	—	2		

(a) MAY BE USED FOR TEST; (b) 5 DSS WORDS = ADC OUTPUT PLUS 6 PARAMETERS;

(c) SYNC, FRAME CNTR, BIT RT ID, ALSEP ID, CMD AS RCVD, CMD MAP;

(d) 8 PSE WORDS = 11 PARAMETERS

DEC 67 5178.3.51

ALSEP OPERATIONS

- PRELAUNCH PHASE: FROM START OF PRELAUNCH ACCEPTANCE TESTS TO COMPLETION OF INSTALLATION IN LAUNCH VEHICLE
- LUNAR SURFACE PHASE: CREW ACTIVITIES WHILE DEPLOYING ALSEP ON LUNAR SURFACE
- LUNAR MISSION PHASE: INITIAL START-UP ACTIVITIES AT MCC FROM FIRST COMMAND (XMTR ON) TO COMPLETION OF EXPERIMENT PREPARATION FOR NORMAL OPERATION (OVERLAPS APOLLO LUNAR MISSION)
- FORTY-FIVE DAY CONTINUOUS DATA PHASE: FROM COMPLETION OF EXPERIMENT PREPARATION FOR NORMAL OPERATION TO END OF 45TH DAY AFTER DEPLOYMENT
- ONE-YEAR ALSEP MISSION PHASE: FROM COMPLETION OF 45TH DAY AFTER DEPLOYMENT TO TERMINATION OF OPERATIONS (POSSIBLY TWO YEARS AFTER DEPLOYMENT)

OCT 68 5178.4.1

PRELAUNCH PHASE

KSC ALSEP INTEGRATION

INSTALLATION IN LUNAR MODULE

RTG CASK LOADING

ALSD INSTALLATION

KSC ALSEP INTEGRATION

- CHECK OUT DATA SUBSYSTEM
- CHECK OUT AND INTEGRATE EACH EXPERIMENT
- INTEGRATED SYSTEM TEST

NETWORK TESTS CONDUCTED SEPARATELY

TESTS COMPLETED BEFORE F-60 DAYS

INSTALLATION IN LUNAR MODULE

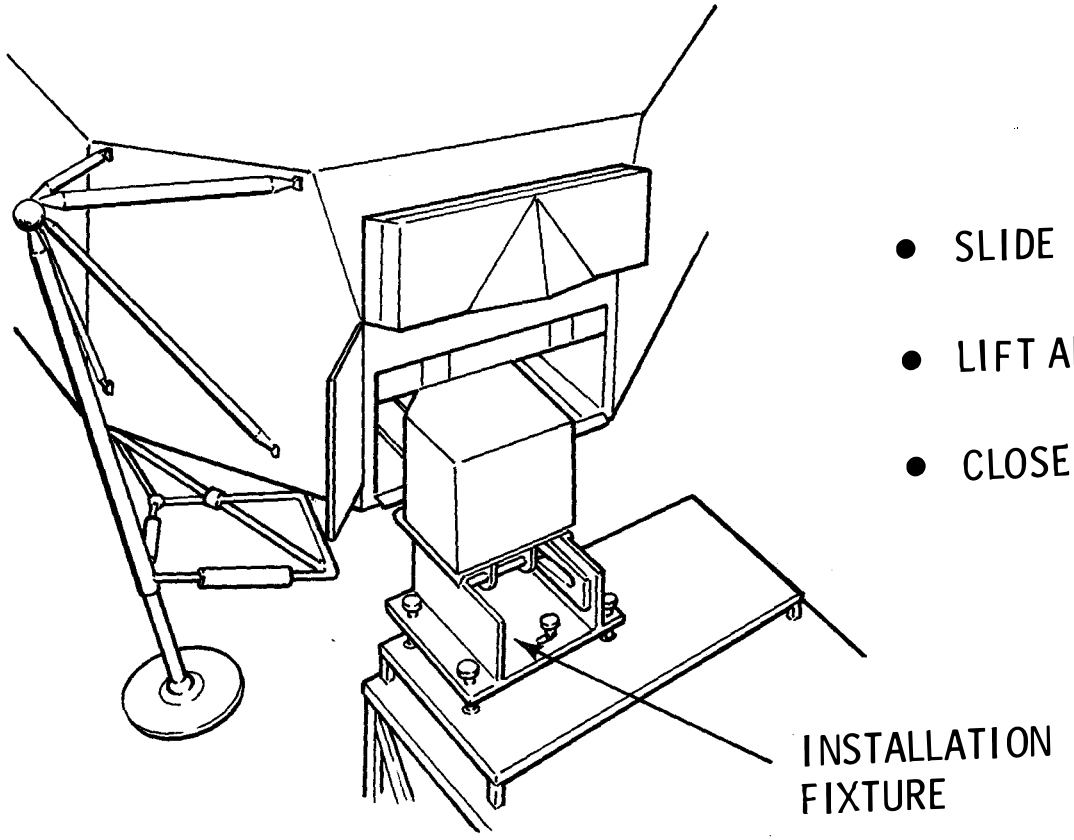

- SLIDE IN
- LIFT AND INSERT PIP PINS
- CLOSE THERMAL DOOR

OCT 68 5178.4.4

RTG CASK LOADING

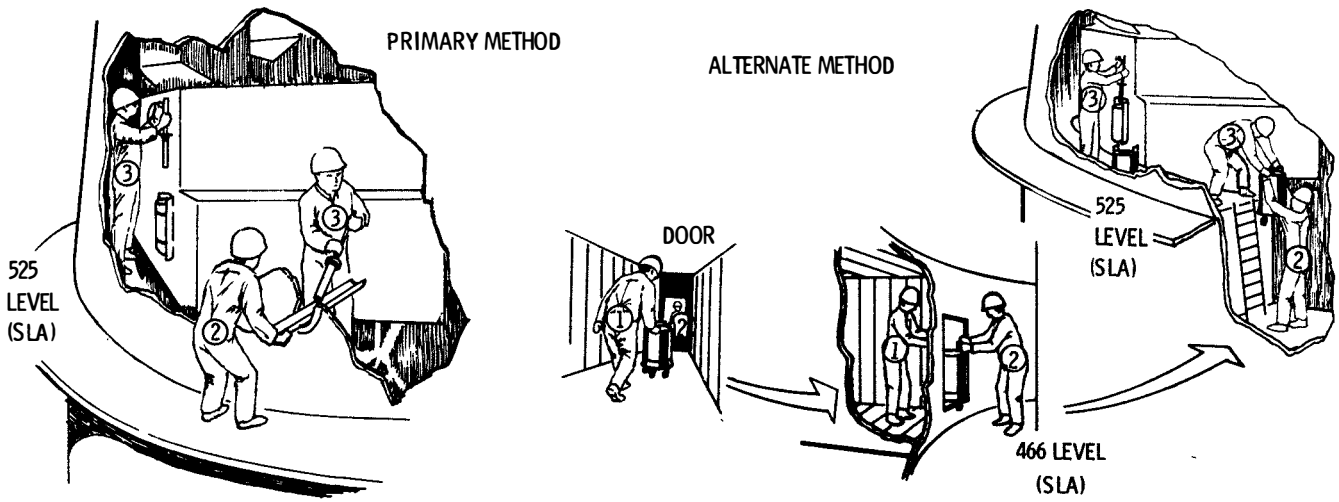

DEC 67 5178.4.5

ALSD INSTALLATION

- ALSD BATTERY MUST BE FRESH OR RECHARGED NEAR LAUNCH TIME
- ACCOMPLISHED BY INSTALLING CHARGED ALSD AT F-12 HR (APPROX)
  (ALSD HAS BEEN FIT-CHECKED PRIOR TO ALSEP INSTALLATION)
- ALSD HAND-CARRIED TO SEQ BAY
- OPEN SEQ BAY DOOR
- INSERT ALSD
- INSTALL PIP-PIN
- CLOSE SEQ BAY DOOR

LUNAR SURFACE PHASE

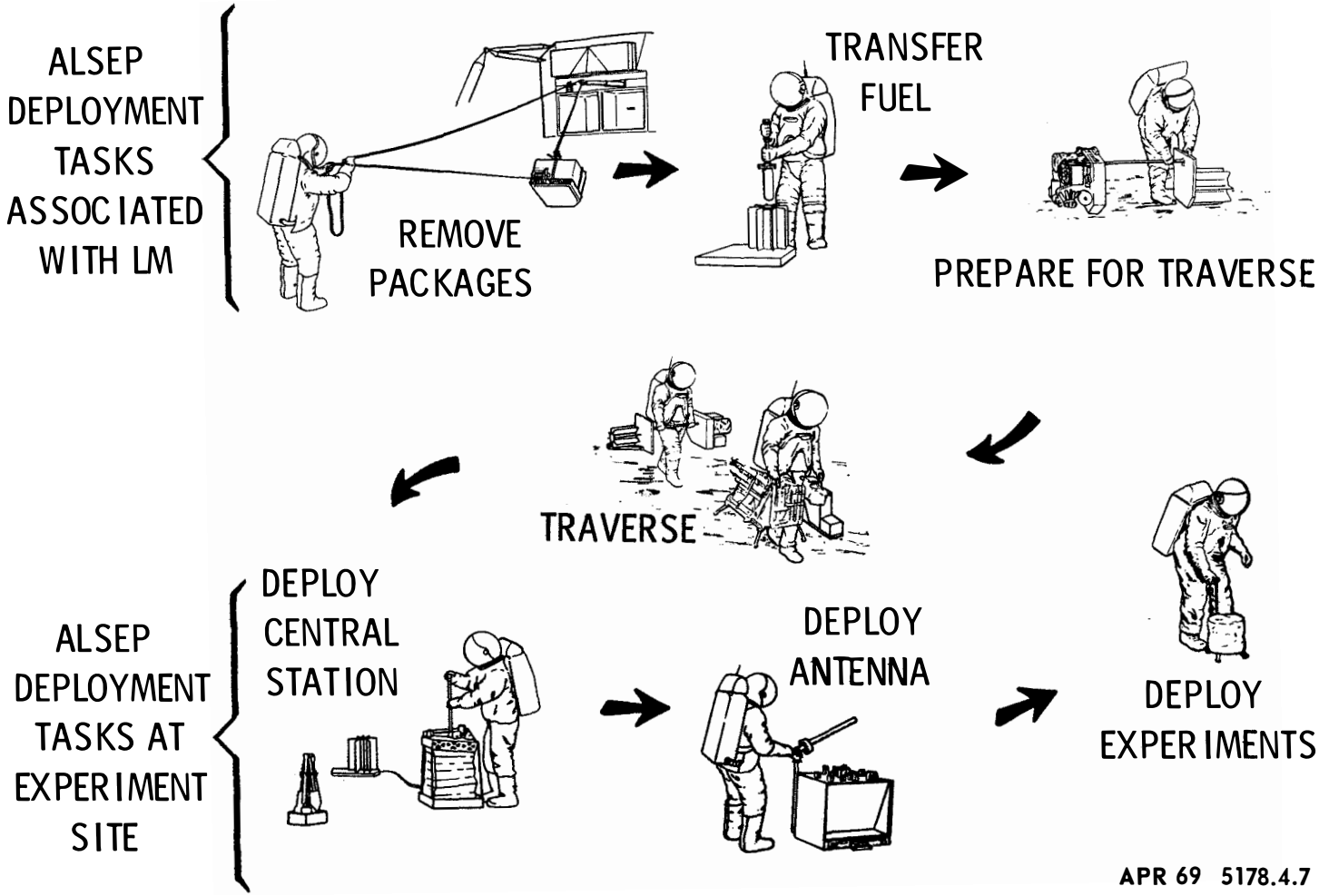

APR 69 5178.4.7

ALSEP DEPLOYMENT TIMELINE

- **KEY TO MISSION PLANNING**
- THIS TIMELINE IS FOR REFERENCE ONLY – THE FINAL TIMELINE WILL CONFORM TO THE FLIGHT PLAN
- ALSEP 1 TIMELINE, 2-MAN EVA

LEGEND:

———— EVENT LINE

TEAM ACTIVITY. BOTH EVA CREWMEN REQUIRED TO ACCOMPLISH A GIVEN TASK

COUPLED ACTIVITY. BOTH CREW MEMBERS ARE WORKING ON RELATED TASKS AND ARE IN VOICE COMM WITH EACH OTHER. VISUAL CONTACT BETWEEN CREWMEN IS HIGHLY DESIRABLE BUT NOT MANDATORY

UNCOUPLED ACTIVITY. CREW MEMBERS WORKING ON UNRELATED TASKS AND PROCEEDING INDEPENDENTLY

OCT 68 5178.4.8

ACTIVITY TIMELINE

CREW PREPARATION ACTIVITIES NOT INCLUDED IN ALSEP TIMELINE:

- DESCENT TO SURFACE
- PLSS STATUS CHECKS
- EVA COMM CHECK
- OPEN SEQ BAY DOOR

ALSEP DEPLOYMENT ACTIVITIES START WITH CREW MEN ON SURFACE AND SEQ BAY DOOR OPEN

ACTIVITY TIMELINE (CONT.)

MIN : SEC	COMMANDER ACTIVITY	LM PILOT ACTIVITY	MCC & REMARKS
00:00	REMOVE PKG #1 (54 SEC)	MONITOR FOR SAFETY	
00:54		REPORT: PKG #1 OUT	ACK & LOG
00:55	RELOCATE PKG #1 (15 SEC)		(REMOVE PACKAGES)
	MONITOR FOR SAFETY	REMOVE PKG #2 (53 SEC)	
02:02	REPORT: PKG #2 OUT		ACK & LOG
02:03	MONITOR FOR SAFETY	RELOCATE PKG #2 (11 SEC)	
	RESTOW BOOMS (30 SEC)	REMOVE ALHT (42 SEC)	
TENTATIVE	CLOSE SEQ BAY DOOR (01 MIN)		
		REMOVE & DEPLOY ALSEP TOOLS (01 MIN 30 SEC)	
	OBTAIN & STOW GEOLOGICAL TOOLS (42 SEC)		
04:26	REPORT: READY FOR FUEL TRANSFER		ACK & LOG

APR 69 5178.4.10

REMOVE PACKAGES

- REMOVE PKG #1
  - RETRIEVE BOOM LANYARD, PULL PKG OUT & LOWER WITH BOOM. RELEASE PKG & PLACE IN TEMPORARY LOCATION
- REPEAT FOR PKG #2

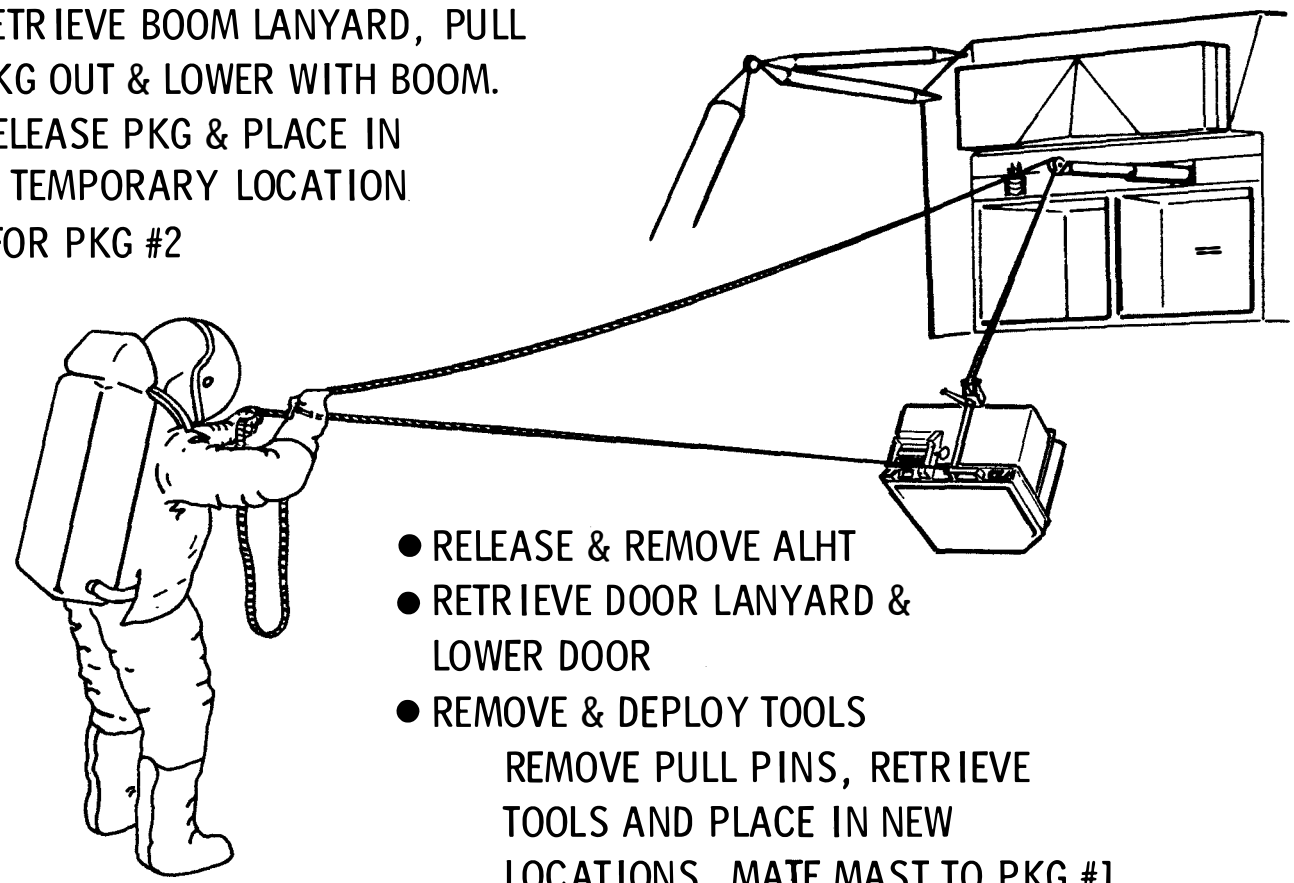

- RELEASE & REMOVE ALHT
- RETRIEVE DOOR LANYARD & LOWER DOOR
- REMOVE & DEPLOY TOOLS
  - REMOVE PULL PINS, RETRIEVE TOOLS AND PLACE IN NEW LOCATIONS, MATE MAST TO PKG #1

APR 69 5178.4.11

ACTIVITY TIMELINE (CONT.)

MIN : SEC	COMMANDER ACTIVITY	LM PILOT ACTIVITY	MCC & REMARKS
04:27	CONTINUE STOWING GEOLOGICAL TOOLS		
		ROTATE PKG #2 UPRIGHT & REMOVE SUBPALLET (40 SEC)	
	MONITOR FOR SAFETY & SUPPLY TOOLS	ROTATE FUEL CASK (43 SEC)	(TRANSFER FUEL)
TENTATIVE		REMOVE CASK DOME (26 SEC)	
		TRANSFER FUEL CAPSULE (01 MIN 08 SEC)	ACK & LOG
07:24	REPORT: RTG FUELED		
07:25		ASSEMBLE BARBELL CONFIGURATION (27 SEC)	(PREPARE FOR TRAVERSE)
	RETRIEVE SUBPALLET (16 SEC)		ACK & LOG
07:52	REPORT: START OF TRAVERSE		
07:53	CARRY SUBPALLET & ALHT LEAD TRAVERSE PICK ROUTE REST AS NECESSARY (5 MIN 52 SEC)	CARRY BARBELL REST AS NECESSARY (5 MIN 52 SEC)	(TRAVERSE)
13:45	REPORT: TRAVERSE COMPLETE		ACK & LOG

OCT 68 5178.4.12

TRANSFER FUEL

- ROTATE PKG #2 & REMOVE SUBPALLET
  - USE UHT TO ROTATE PKG #2 UPRIGHT
  - RELEASE BOYD BOLTS, REMOVE SUBPALLET FROM PKG #2
- ROTATE FUEL CASK FOR FUEL TRANSFER
  - RETRIEVE CASK LANYARD
  - ROTATE LEVERS
  - PULL SPLINE
  - ROTATE CASK TO DESIRED ANGLE
- REMOVE CASK DOME USING DRT
- TRANSFER FUEL CAPSULE
  - ENGAGE FTT WITH CAPSULE
  - LOCK TOOL TO CAPSULE TO RELEASE FROM CASK
  - WITHDRAW CAPSULE
  - LOWER INTO RTG
  - RELEASE TOOL FROM CAPSULE TO LOCK IN RTG

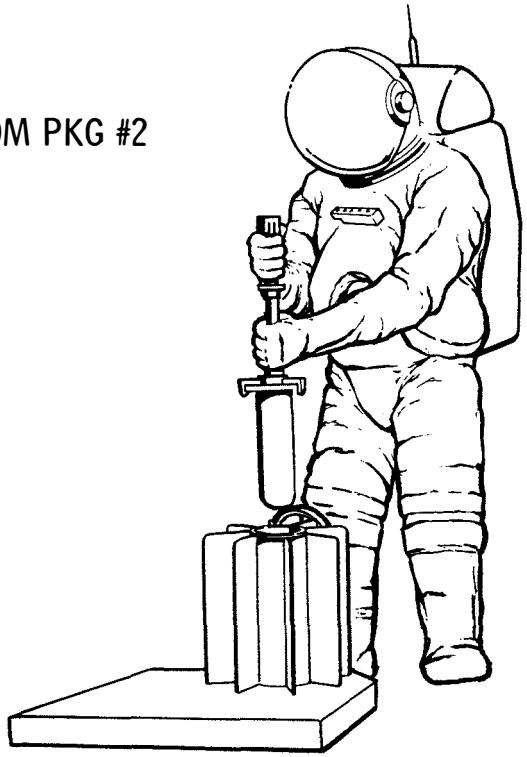

APR 69 5178.4.13

PREPARE FOR TRAVERSE

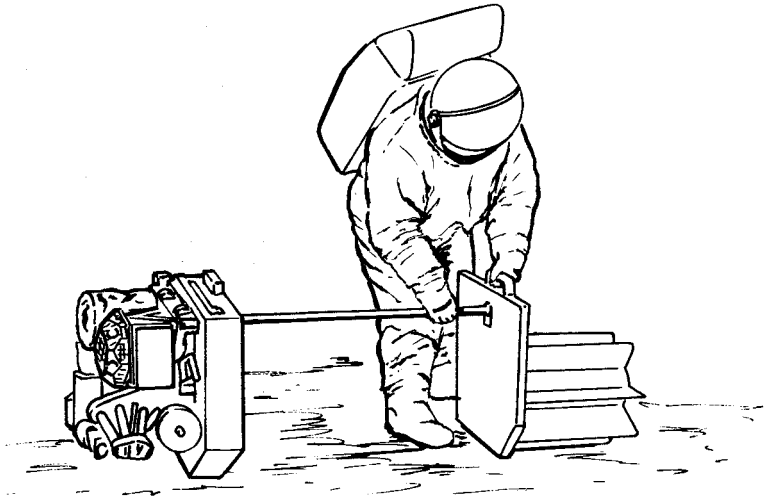

- ROTATE & RE-ORIENT PKG #2
- JOIN MAST TO PKG #2
  (ALREADY MATED TO PKG #1)

APR 69 5178.4.14

TRAVERSE

- COMMANDER
  - CARRIES SUBPALLET & ALHT
  - LEADS & PICKS ROUTE
- LM PILOT
  - CARRIES ALSEP BARBELL
- REST, AS NECESSARY
- COMMANDER PICKS DEPLOYMENT SITE

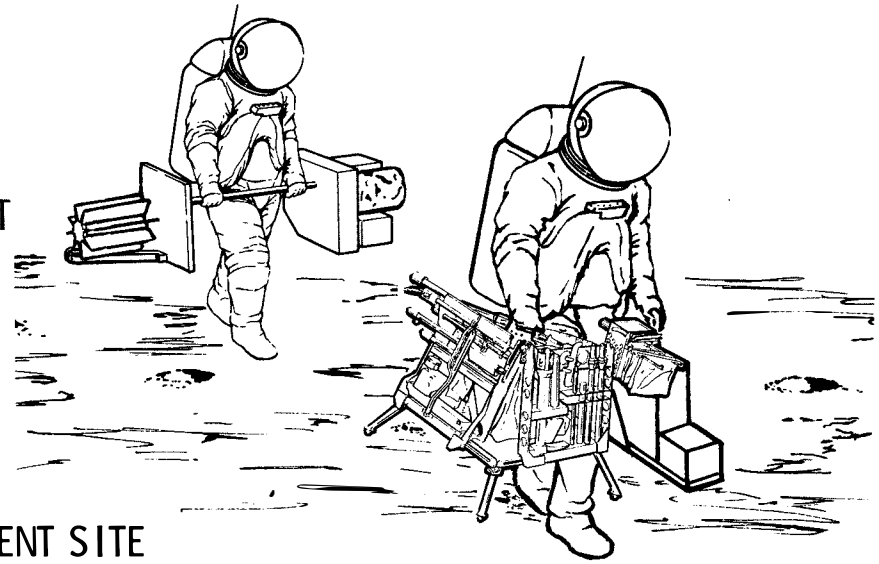

APR 69 5178.4.15

ACTIVITY TIMELINE (CONT.)

MIN : SEC	COMMANDER ACTIVITY	LM PILOT ACTIVITY	MCC & REMARKS
13:46			
TENTATIVE	TEMPORARILY EMPLACE SUBPALLET & ALHT (14 SEC) ROTATE PKG #2 (9 SEC) DEPLOY PKG #2 (01 MIN 3 SEC)	DEPLOY MAST/PKG #1 (22 SEC) MONITOR FOR SAFETY	(DEPLOY CENTRAL STATION)
15:12	REPORT: AMMETER READING		ACK & LOG PET-ZERO
15:13	CONNECT RTG TO CENT STA (02 SEC) DISCONNECT & STOW MAST (58 SEC)	REMOVE SIDE/CCIG & CONNECT CABLE (41 SEC) ACTIVATE RTG SW (2 SEC)	
16:13		REPORT: RTG SW ON	ACK & LOG
16:14	ROTATE PKG #1 (14 SEC)	DEPLOY PSE STOOL (18 SEC)	
16:28			

APR 69 5178.4.16

ACTIVITY TIMELINE (CONT.)

MIN : SEC	COMMANDER ACTIVITY	LM PILOT ACTIVITY	MCC & REMARKS
16:29	RELEASE SWS (32 SEC)		
	RELEASE PSE (32 SEC)	DEPLOY SWS (01 MIN 22 SEC)	
	REMOVE LSM (54 SEC)	REPORT: ALIGNMENT COMPLETE	ACK
		DEPLOY PSE (01 MIN 05 SEC)	(DEPLOY CENTRAL STATION)
TENTATIVE	RELEASE SUNSHIELD (03 MIN)	REPORT: ALIGNMENT VALUES	ACK
		DEPLOY LSM (02 MIN 34 SEC)	(DEPLOY EXPER)
	DEPLOY SUNSHIELD (53 SEC)	REPORT: ALIGNMENT VALUES	ACK (DEPLOY ANTENNA)
	ASSEMBLE ANTENNA (02 MIN 06 SEC)	DEPLOY SIDE/CCIG (03 MIN 42 SEC)	
	CONFIRM: AZ/EL SETTING (02 MIN 07 SEC)		GIVE: AZ/EL SETTING
	ACTUATE SW-1	OBTAIN METRIC PHOTOGRAPHS OF DEPLOYED ALSEP	
	REQUEST: XMTR ON IF ALSEP DOES NOT RESPOND ACTUATE SW-2 AND SW-3		COMMAND: XMTR ON REPORT: TM STATUS
28:00	REPORT: SW POSITIONS		ACK & LOG
TBD	RETURN TO LM	RETURN TO LM	

APR 69 5178.4.17

DEPLOY CENTRAL STATION

- DEPLOY MAST/PKG #1
  - DISCONNECT MAST FROM PKG #2
  - CARRY MAST/PKG #1 10 FT
- DEPLOY PKG #2
  - ROTATE PKG #2 UPRIGHT & ALIGN E-W
  - READ AMMETER
- CONNECT RTG TO CENTRAL STATION
  - RELEASE BOYD BOLTS & REMOVE CABLE
  - PLUG IN CABLE
  - ACTIVATE RTG SWITCH

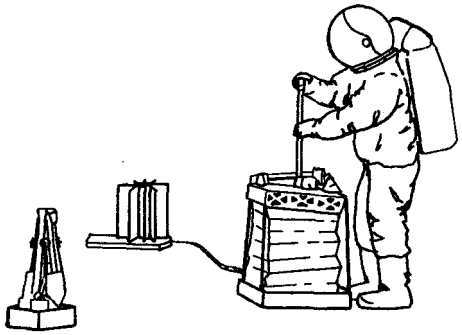

- REMOVE SIDE AND CONNECT CABLE
  - RELEASE/REMOVE SIDE FROM SUBPALLET TEMPORARILY PLACE ON SURFACE
  - PLUG IN CABLE
  - DISCONNECT MAST FROM PKG #1 & STOW TEMPORARILY
  - ROTATE PKG #1 UPRIGHT AND ALIGN E-W
- REMOVE EXPER AND DEPLOY SUNSHIELD
  - REMOVE PSE STOOL FROM SUBPALLET & DEPLOY
  - REMOVE & DEPLOY SWS
  - REMOVE & DEPLOY PSE SENSOR
  - REMOVE LSM & PLACE TEMPORARILY ON SURFACE
  - RELEASE SUNSHIELD & ANTENNA BOYD BOLTS
  - USE TOOL TO CONTROL UPWARD (SPRING) MOTION OF SUNSHIELD
  - REMOVE & DISCARD CURTAIN COVERS

DEPLOY ANTENNA

- ASSEMBLE ANTENNA
  - INSTALL MAST ON CENTRAL STATION
  - INSTALL AIMING MECHANISM ON MAST
  - INSTALL ANTENNA ON AIMING MECHANISM
- ORIENT ANTENNA
  - ENTER COARSE & FINE ADJUSTMENTS IN AZIMUTH
  - ENTER COARSE & FINE ADJUSTMENTS IN ELEVATION
  - LEVEL AIMING MECHANISM BASE
  - ALIGN E-W WRT SHADOW
  - RECHECK LEVEL

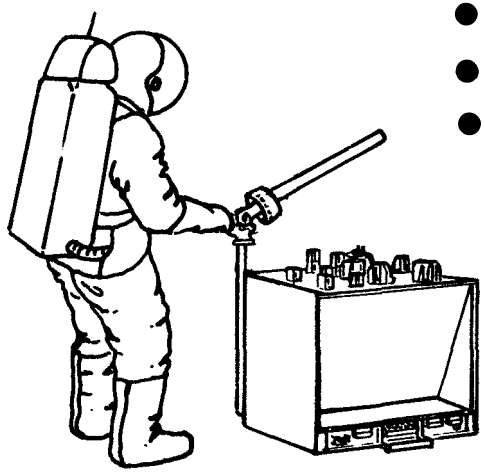

APR 69 5178.4.19

DEPLOY EXPERIMENTS

SWS	PSE	LSM	SIDE
CARRY 13 FT	CARRY 10 FT	CARRY 50 FT	CARRY 55 FT
EXTEND LEVELING LEGS	REMOVE GIRDLE	DEPLOY SUPPORT LEGS	PLACE ON SURFACE
PLACE ON SURFACE (PARTIALLY SELF-LEVELING)	PLACE ON STOOL	PLACE ON SURFACE	DEPLOY GROUND SCREEN
ALIGN BY SHADOWS	UNFOLD SHROUD	UNFOLD SENSOR ARMS	RELEASE CCIG
	LEVEL BY BALL INDICATOR	REMOVE PRA COVERS	EMPLACE SIDE ON GROUND SCREEN
	READ ALIGNMENT BY GNOMON SHADOW	LEVEL BY BUBBLE	EMPLACE CCIG
		ALIGN BY SHADOWGRAPH	LEVEL BY BUBBLE
		READ SHADOWGRAPH ALIGNMENT	ALIGN BY SHADOWS

APR 69 5178.4.20

MSFN/MCC OPERATIONS

- OPERATIONAL CONCEPT
- SCHEDULE OF MONITORING
- MCC MONITORING & CONTROL REQMTS
- OPERATIONAL PHASES

OPERATIONAL CONCEPT

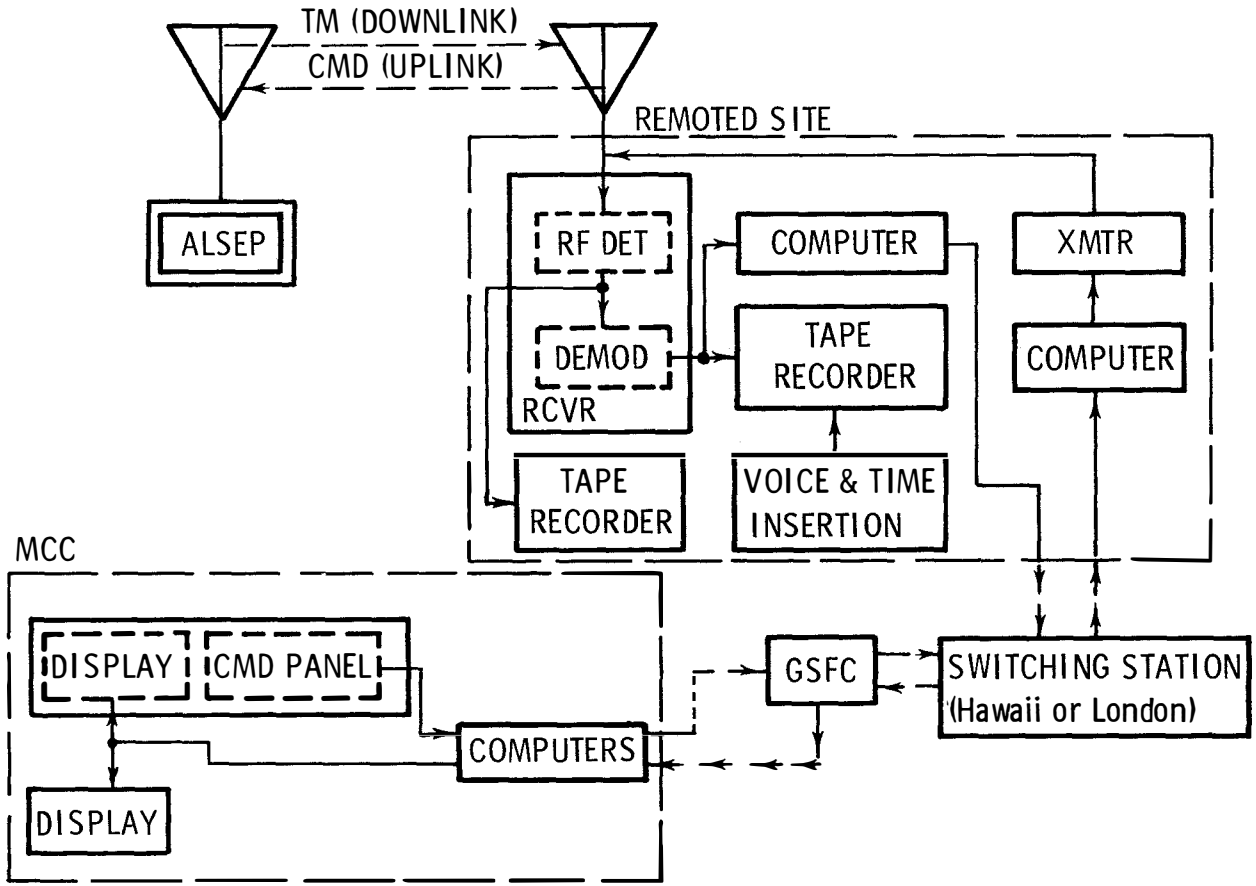

OCT 68 5178.4.22

SINGLE-ALSEP SCHEDULING

TIME PERIOD	≈F-70 DAYS	0-45 DAYS	45-365 DAYS	365-720 DAYS
ACTIVITIES AT MSFN SITES	NETWORK COMPATIBILITY TESTS (SEVERAL HOURS)	RECORD CONTINUOUSLY ALL ALSEP DATA		IF CONDITIONS WARRANT, ALSEP CAN BE LEFT ON UP TO 2 YR, TERMINATED BY ACCUTRON TIMER
MCC-H ACTIVITIES		MONITOR & CONTROL CONTINUOUSLY	MONITOR & CONTROL 2 HR PER DAY*	

*ALSO LONGER PERIODS, UP TO 60 HR, DURING LUNAR SUNRISE & SUNSET; PLUS EXTENSION WHEN CONTINGENCIES OCCUR

DEC 67 5178.4.23

CMD AND TM SUMMARY

BUILDING 4 ALSEPS FOR EARLY APOLLO LUNAR LANDINGS	
UPLINK (CMD)	DOWNLINK (TM)
• ONE FREQUENCY, 2119 MHz • 8 DECODER ADDRESSES (2/ALSEP) • 100 ALSEP COMMANDS, 65-75 USED ON ANY SINGLE ALSEP (7-BIT CMD ALLOWS 128, BUT 28 ARE NOT VALID) • ALL COMMANDS ARE RTC'S, NO "LOAD" CAPABILITY IS REQUIRED; (SIDE USES 5 CMDs MULTIPLEXED, 4-CALLED LOADS-TO SET REGISTER & 1 TO EXECUTE) • NO TIME-CRITICAL CMDs EXCEPT PSE FORCED LEVELING (BACKUP TO AUTO MODE) WHERE CMD IS SENT TWICE WITH TIME INTERVAL ± 10 SEC • MAX 1 CMD/SEC LIMITED BY DECODER	• 4 DIFFERENT S-BAND FREQUENCIES ALLOCATED • DATA RATES: 1.06 KBPS NORMAL, 0.53 KBPS CONTINGENCY (ALSEP 4 HAS ADDITIONAL 10.6 KBPS HBR SELECTED BY CMD; USED ONLY PERIODICALLY TO SUPPORT ASE; ASE REQMT ONCE/WK 15-30 MIN PLUS ≃ 1 HR WHEN CREW IS ON SURFACE & ≃ 1 HR SEVERAL MONTHS LATER) • 30-FT MSFN ANTENNA ADEQUATE FOR NORM BIT RT; 85-FT REQD FOR HBR • ALSEP FRAME = 64 10-BIT WORDS (0.60377 SEC @ NORM BIT RT) • CMD VERIFICATION WORD (INC MAP) APPEARS ONLY ONCE IN TM STREAM

APR 69 5178 4.24

MULTIPLE-ALSEP SCHEDULING

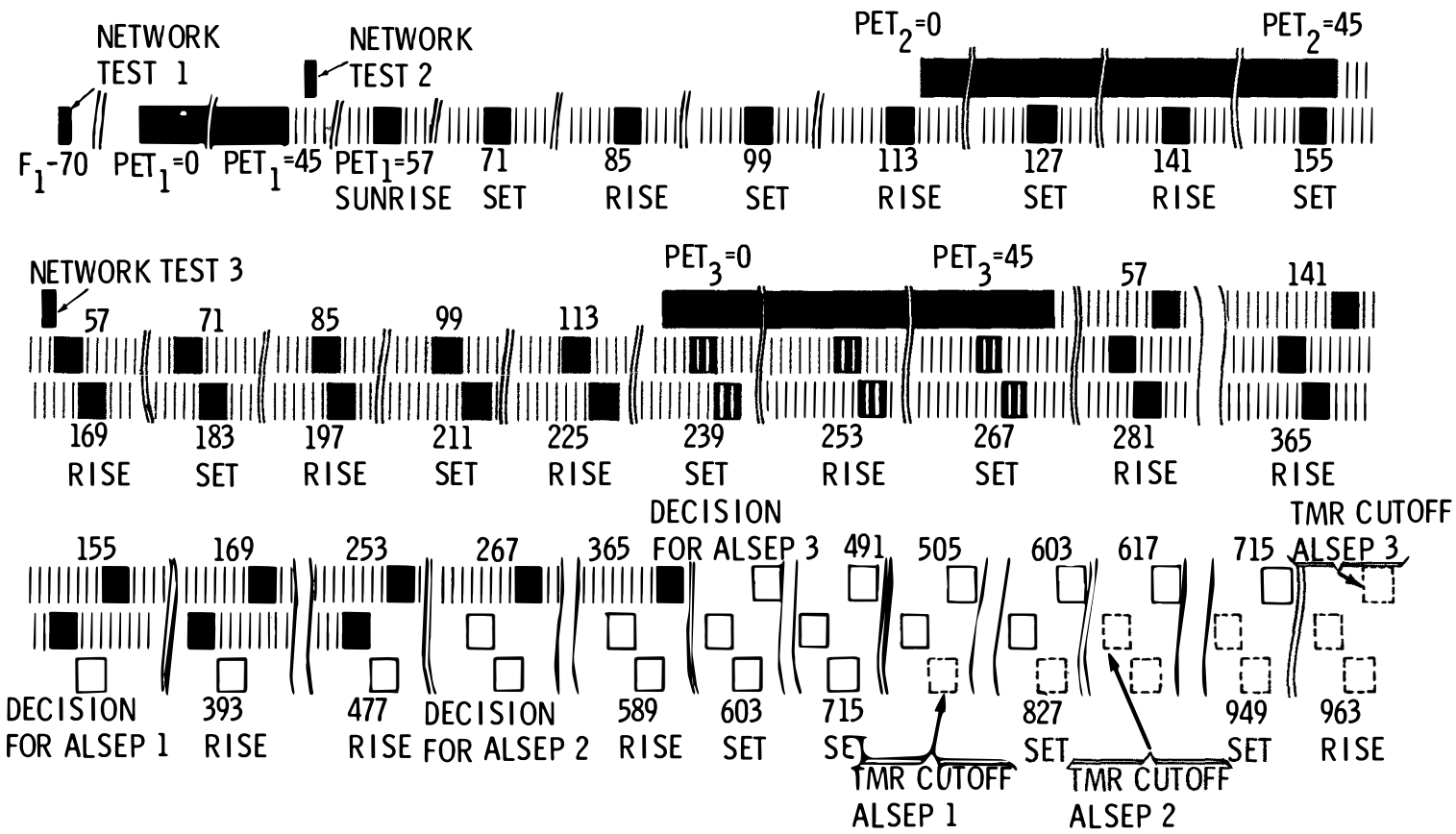

DEC 67 5178.4.25

MCC MONITORING AND CONTROL REQUIREMENTS

MONITORING & CONTROL	PHASE: INITIAL START-UP	PHASE: 0 TO 45 DAYS	PHASE: 45 TO 365 DAYS
PWR/THERMAL	H	H	H
OTHER ENG STATUS	H	M	C
SCIENCE	P	P+R	R
CMD FUNCTION STATUS	H	M	L
SEND COMMANDS	I+C	E+C	E+C

LEGEND

H = HIGH PRIORITY

M = MEDIUM PRIORITY

L = LOW PRIORITY

C = CONTINGENCY-ORIENTED

P = PRINCIPAL INVESTIGATOR

R = ROUTINES, PREPLANNED

I = INITIAL TUNE-UP

E = ENVIRONMENTAL CHANGES (SUCH AS SOLAR FLARES)

OCT 68 5178.4.26

LUNAR MISSION PHASE

- SYSTEM START-UP
- EXPERIMENT START-UP
- ACTIVITIES PHASED TO LM ASCENT
- PRE-SPLASHDOWN CONSTRAINTS

DEC 67 5178.4.27

SYSTEM START-UP

ACTIVITY	COMMENT
CREW: REQUESTS XMTR ON MCC: CMD XMTR ON MCC: VERIFY XMTR ON MCC: ADVISE CREW "XMTR ON"	NOTE: START-UP DEPENDS UPON RTG WARM-UP CYCLE.

- THIS ACTIVITY MARKS BEGINNING OF LUNAR MISSION PHASE
- THIS IS THE ONLY CREW/MCC COUPLED ACTIVITY (THERE IS NO CREW TUNE-UP, CALIBRATION, ETC.)

EXPERIMENT START-UP TIMELINE

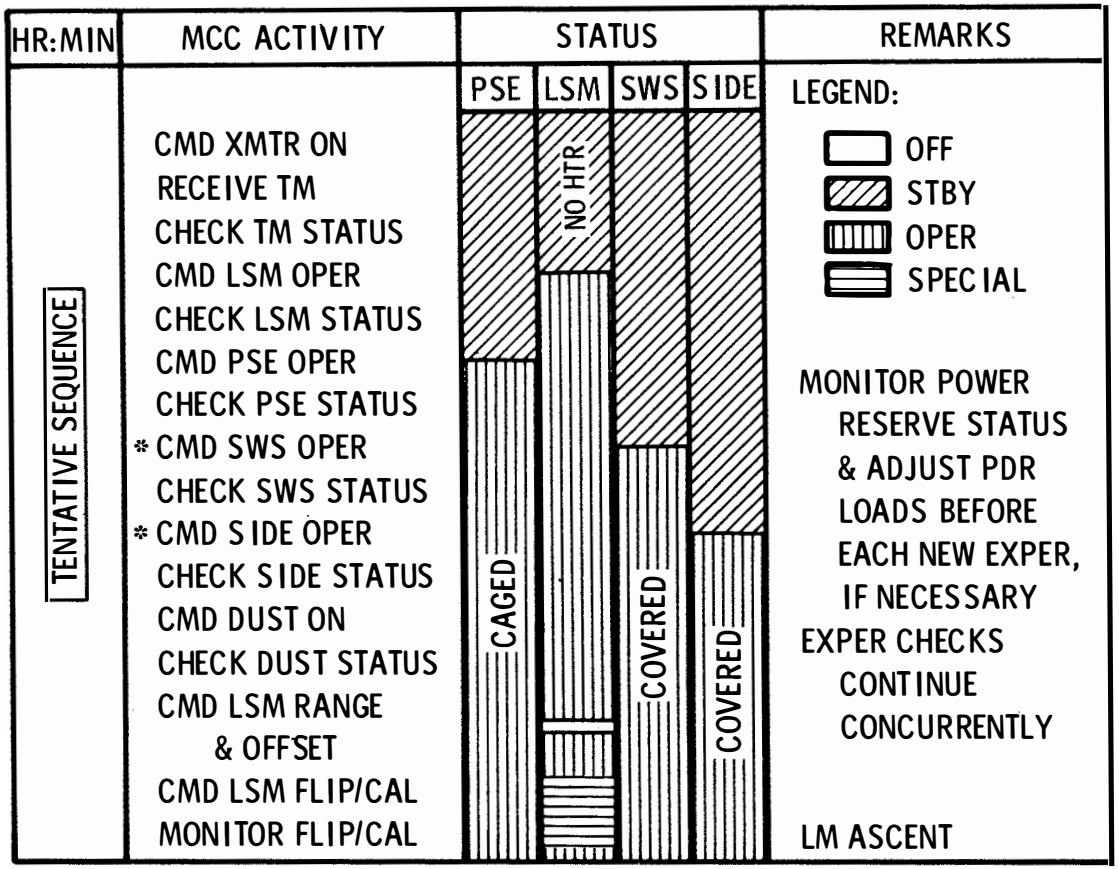

*MAY REQUEST SEVERAL DAYS VACUUM SOAK

OCT 68 5178.4.29

START-UP TIMELINE (CONT.)

HR:MIN	MCC ACTIVITY	STATUS				REMARKS
		PSE	LSM	SWS	SIDE	
TENTATIVE SEQUENCE	CMD PSE UNCAGE	UNCAGED				MAY BE PRE-ASCENT
	CHECK PSE					
	CMD SIDE STBY					AS NECESSARY FOR POWER MANAGEMENT DURING PSE LEVELING
	CMD SWS STBY					
	CMD PSE LEVEL					
	CMD PSE GAIN					
	CMD PSE CAL					
	CMD SWS OPER			COVERED		
	CMD SIDE OPER					
	CMD LSM FLIP/CAL					REPEAT AS NECESSARY; SITE SURVEY MUST OCCUR BETWEEN 4TH & 5TH FLIP/CAL
	MONITOR FLIP/CAL					
	CMD SWS COVER GO					
	CMD SIDE COVER GO			UNCOVERED		
	CMD CCIG SEAL BREAK					
	CMD LSM SITE SURVEY				UNCOVERED	
	MONITOR SURVEY					
	FULL OPERATION					

OCT 68 5178.4.30

ACTIVITIES PHASED TO LM ASCENT

- LSM FLIP/CAL REQD APPROX 1 HR BEFORE ASCENT
- PSE UNCAGE MAY BE SCHEDULED BEFORE ASCENT
- MONITOR ALL SCIENTIFIC & ENGINEERING DATA BEFORE, DURING, & AFTER ASCENT TO DETERMINE EFFECTS OF LAUNCH (DUST DETECTOR IS A KEY MEASUREMENT)
- REMOVE DUST COVERS & BREAK COLD CATHODE GAUGE SEAL SHORTLY AFTER ASCENT

OCT 68 5178.4.31

PRE-SPLASHDOWN CONSTRAINTS

IF NECESSARY DURING CRITICAL APOLLO MANEUVERS, ALSEP XMTR MAY BE TURNED OFF. OTHER APOLLO PRIORITIES MAY TAKE PRECEDENCE OVER ALSEP PRIORITIES.

DEC 67 5178.4.32

45-DAY CONTINUOUS DATA PHASE

- MONITOR ENGINEERING & SCIENCE DATA AGAINST LIMITS
- ESTABLISH ENGINEERING DATA TRENDS FOR USE DURING LATER INTERMITTENT OPERATIONS
- ADJUST EXPERIMENTS FOR OPTIMUM SCIENTIFIC DATA COLLECTION & CHANGING ENVIRONMENTAL CONDITIONS AS REQUESTED BY THE PRINCIPAL INVESTIGATOR
- APPLY CORRECTIVE COMMANDS FOR CONTINGENCIES, AS NECESSARY

ONE-YEAR ALSEP MISSION PHASE

- MONITOR ENGINEERING & SCIENCE DATA AGAINST LIMITS & TRENDS ESTABLISHED DURING PREVIOUS CONTINUOUS OPERATIONS
- ADJUST EXPERIMENTS IN ACCORDANCE WITH ROUTINES PRESCRIBED BY THE PRINCIPAL INVESTIGATORS
- APPLY CORRECTIVE COMMANDS FOR CONTINGENCIES, AS NECESSARY
- AT YEAR END, TURN OFF XMTR OR CONTINUE OPERATIONS AS DIRECTED

STRUCTURE/THERMAL SUBSYSTEM

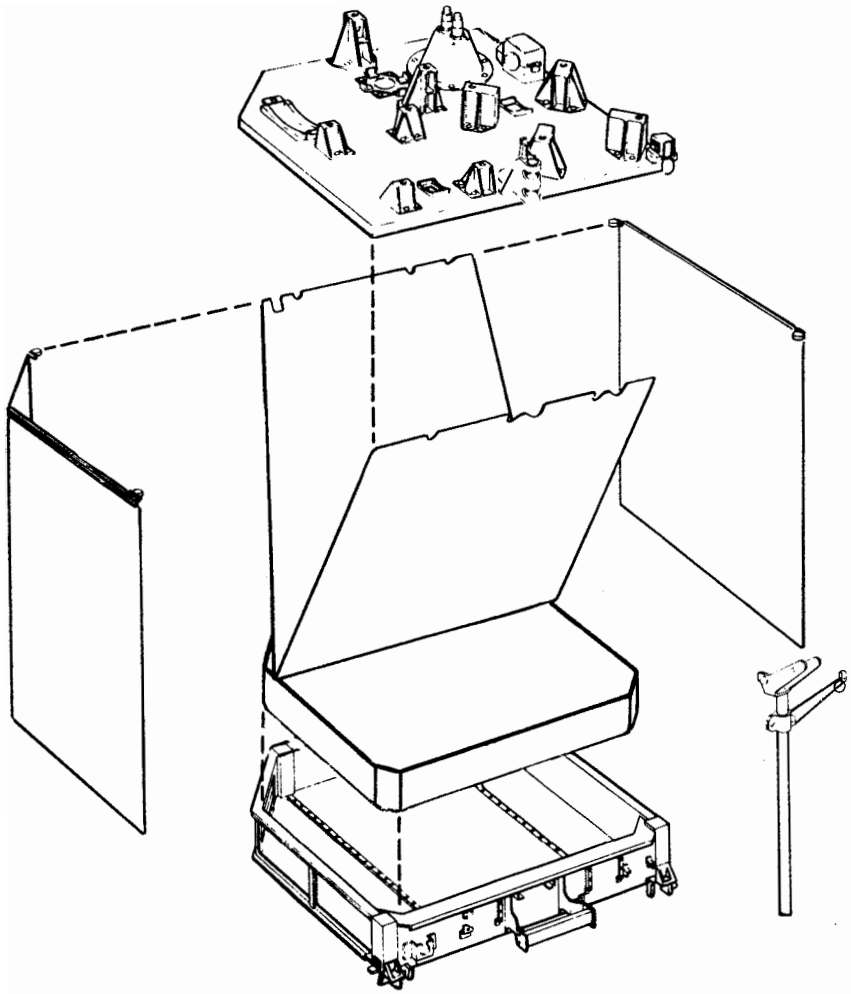

- COMPONENTS & FUNCTION
- DEPLOYMENT
- COMMANDS & DATA

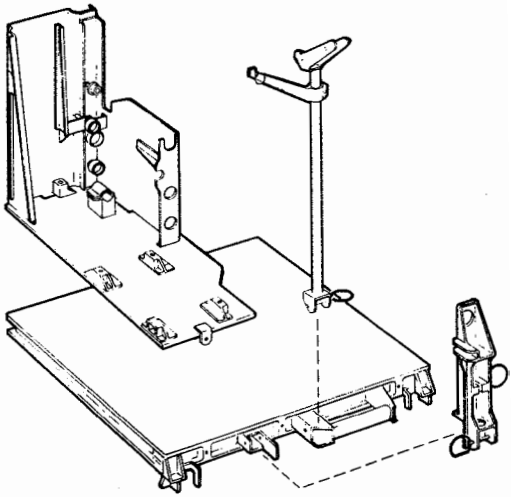

APR 69 5178.5.1

MECHANICAL CRITERIA

STRUCTURAL ELEMENTS

- WITHSTAND LOADS OF LAUNCH, FLIGHT, & LUNAR LANDING
- WITHSTAND LOADS ASSOCIATED WITH DEPLOYMENT
- SUPPORT THE EQUIPMENT ON THE LUNAR SURFACE

JOINTS, FITTINGS & FASTENERS

- HOLD SECURELY IN LOCKED POSITIONS
- RELEASE & FUNCTION DURING DEPLOYMENT

SPECIAL JIGS & SHIPPING CONTAINERS PROVIDE PROTECTION FOR PRELAUNCH HANDLING, TRANSPORTATION, & STORAGE

DEC 67 5178.5.2

CENTRAL STATION THERMAL CONTROL

MECHANICAL

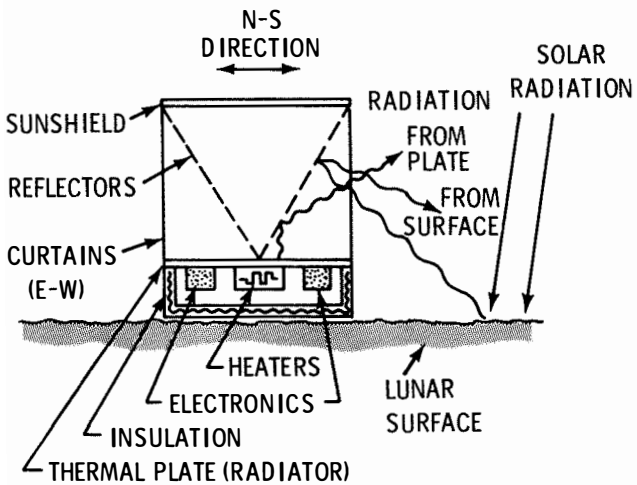

ELECTRICAL

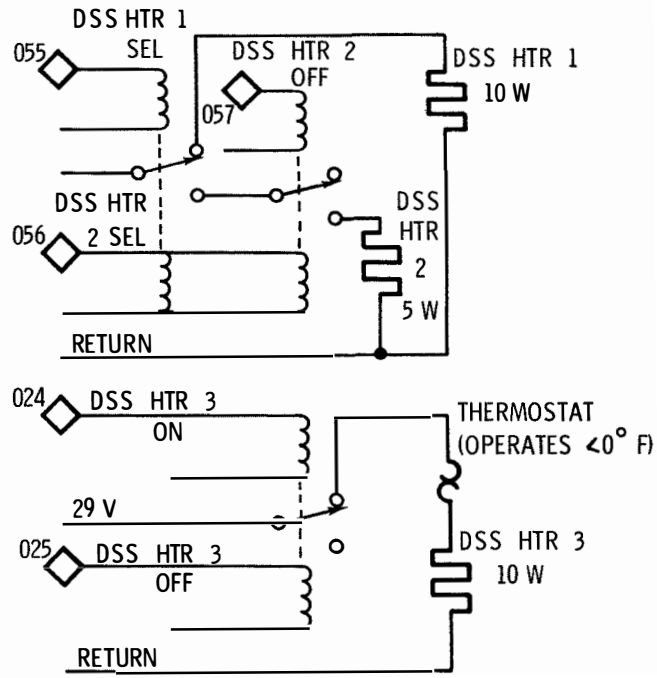

APR 69 5178.5.3

DUST DETECTOR

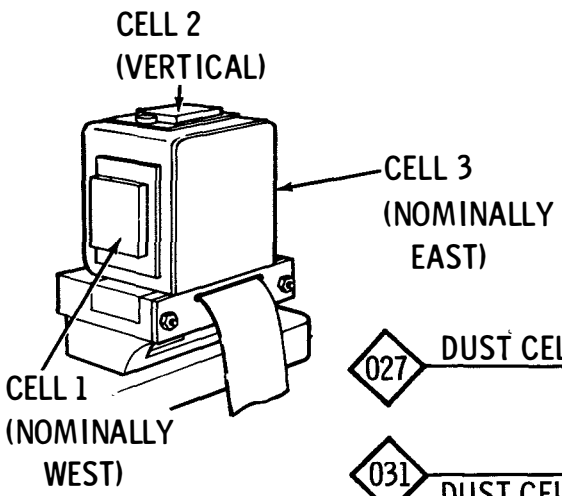

- TO ASSESS DUST ACCRETION ON ALSEP & INFER DEGRADATION OF THERMAL SURFACES
- USES THREE 2 CM X 2 CM PHOTOCELLS, EACH HAVING:
  - BLUE FILTER TO CUT OFF UV BELOW 0.4 MICRONS
  - 0.060-IN. FUSED SILICA RADIATION PROTECTION
  - THERMISTOR ON REAR TO MONITOR TEMP

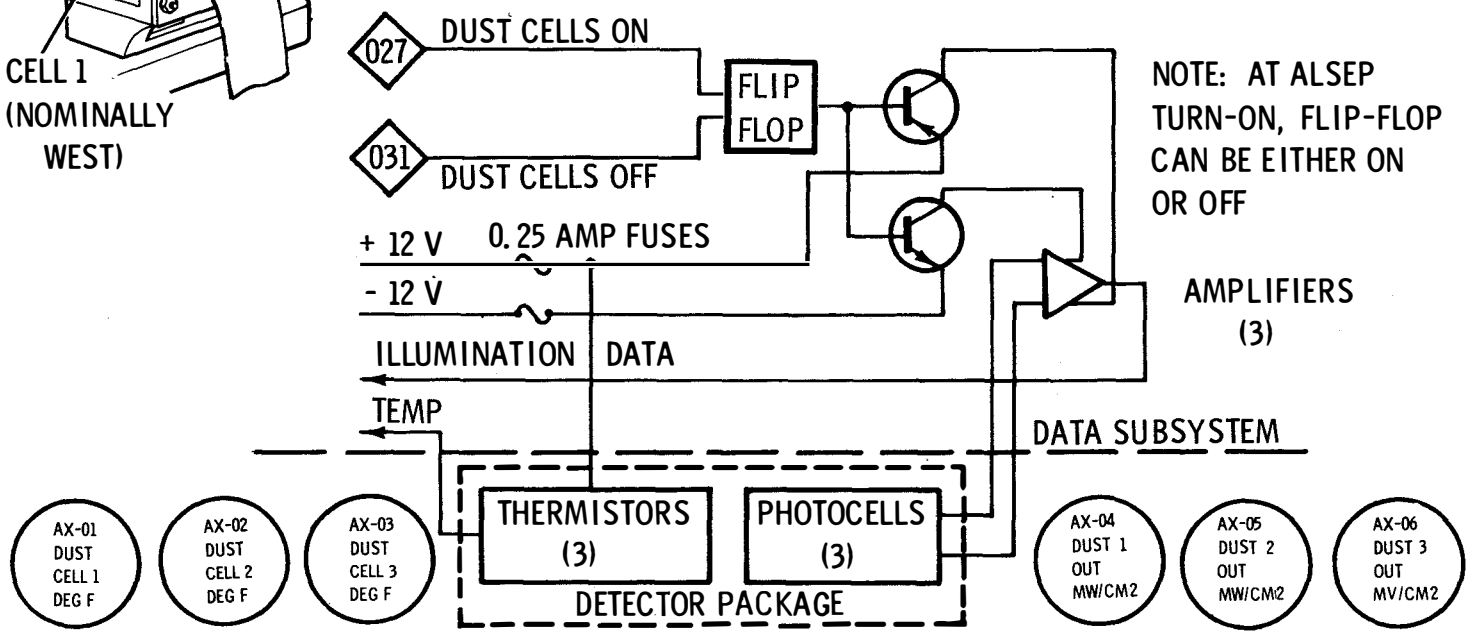

SEPT 68 5178.5.4

FASTENERS

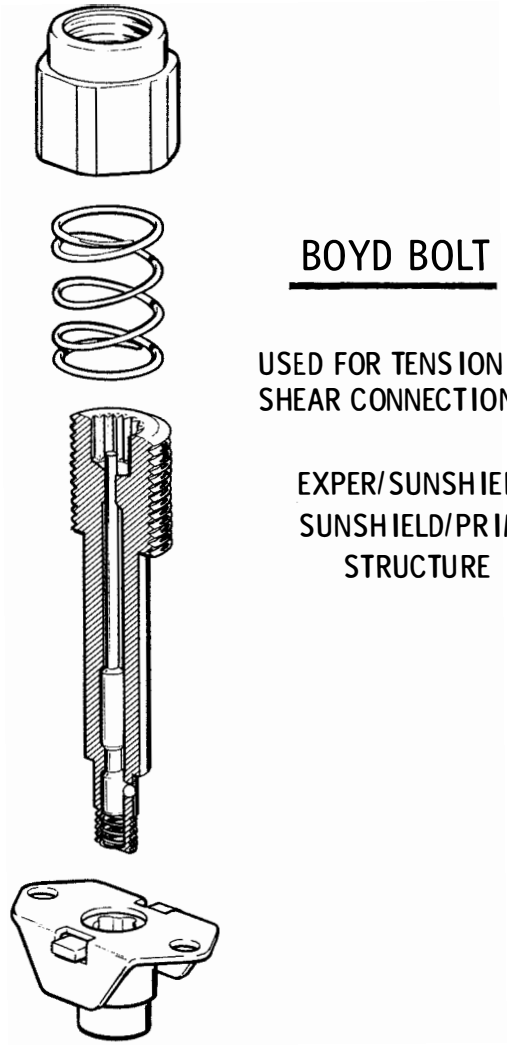

BOYD BOLT

USED FOR TENSION &
SHEAR CONNECTIONS:

EXPER/SUNSHIELD
SUNSHIELD/PRIMARY
STRUCTURE

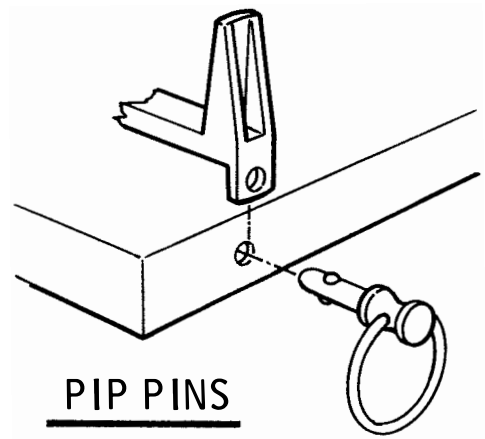

PIP PINS

SPRING-LOADED
DETENT BALLS
USED FOR SHEAR
CONNECTIONS:

SUBPALLET/PALLET
ALSD PALLET
TOOLS SUBPALLET

APR 69 5178.5.5

MAST/CARRY BAR

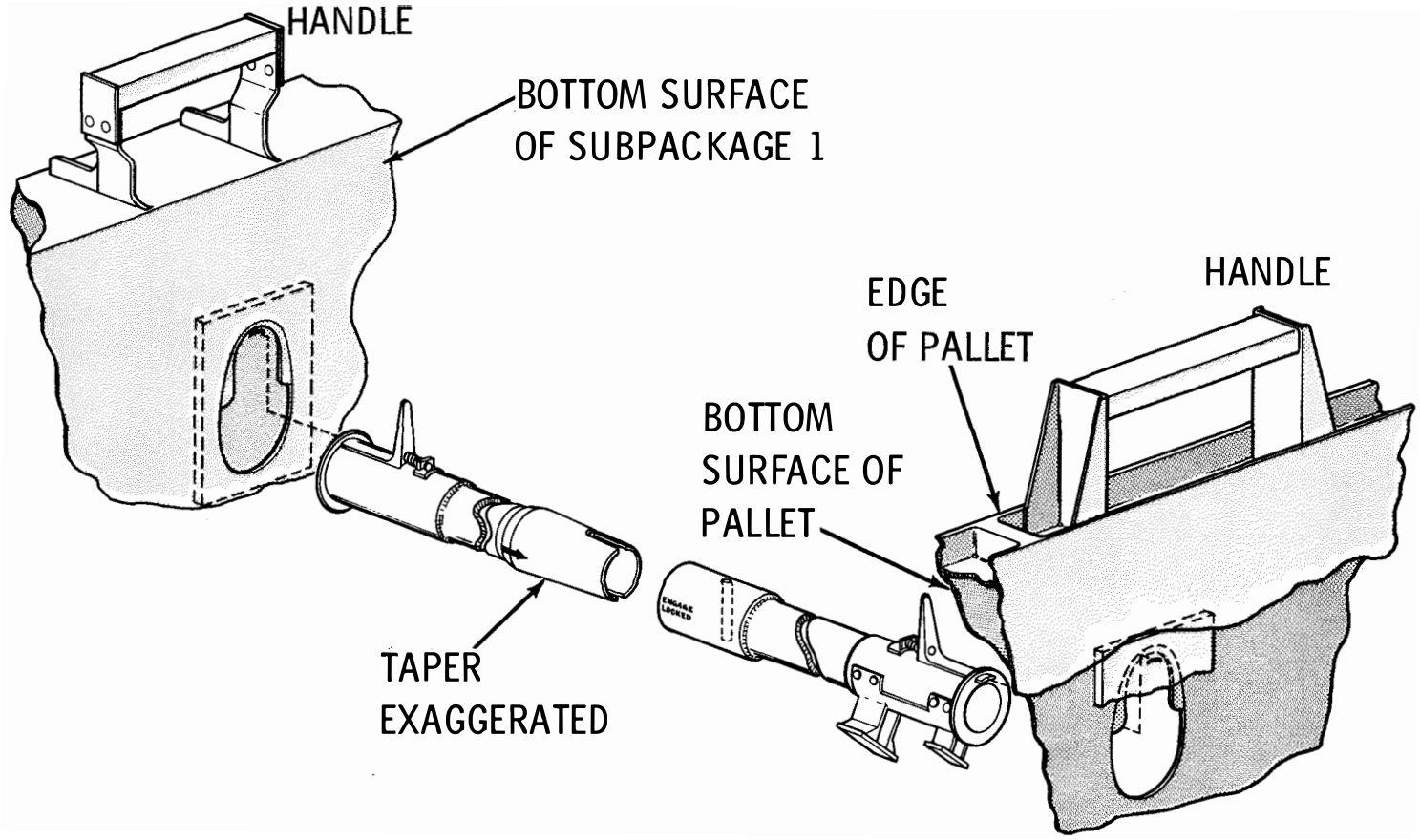

DEC 67 5178.5.6

MAST/PRIMARY STRUCTURE

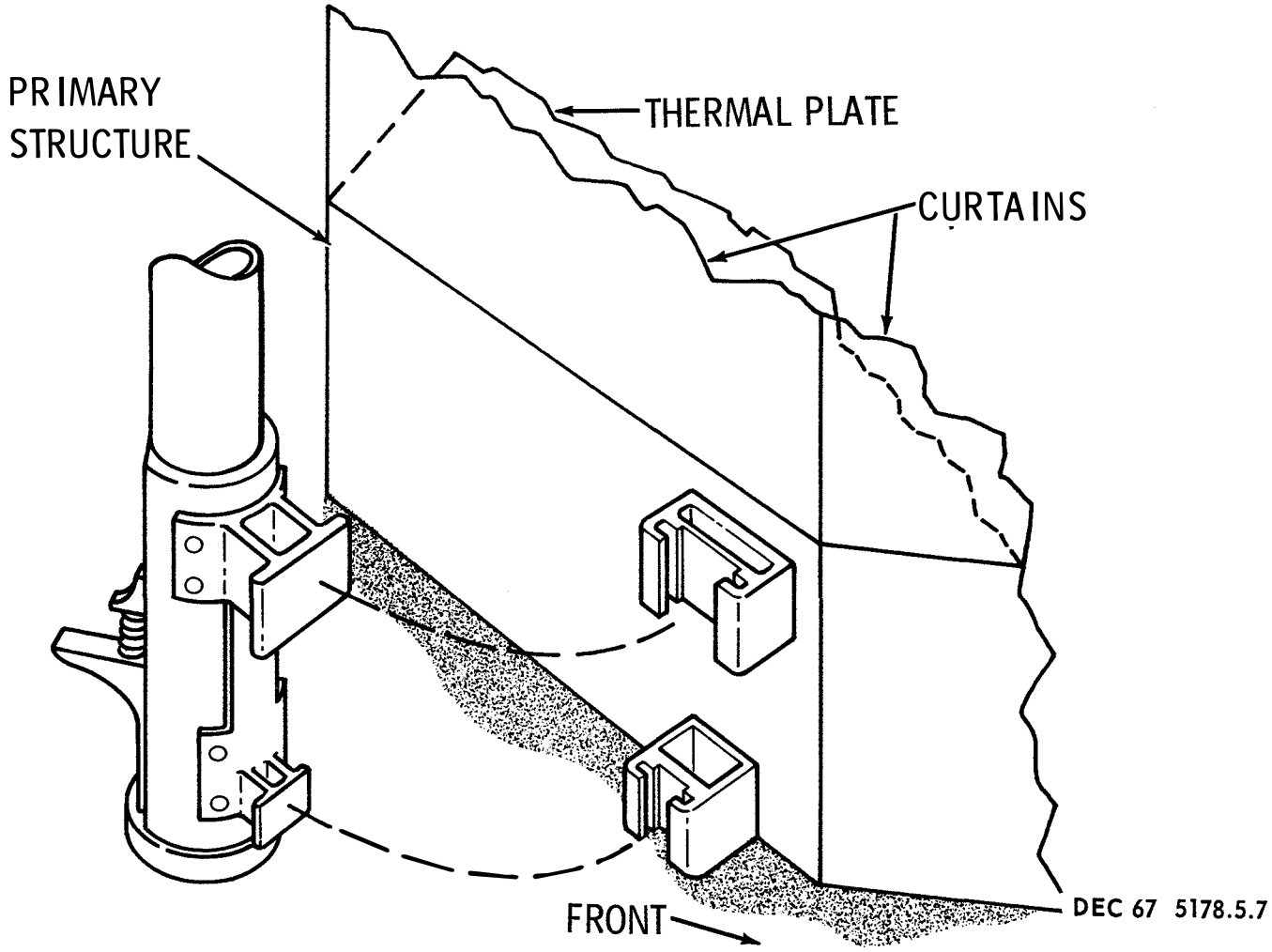

MAST/AIMING MECHANISM

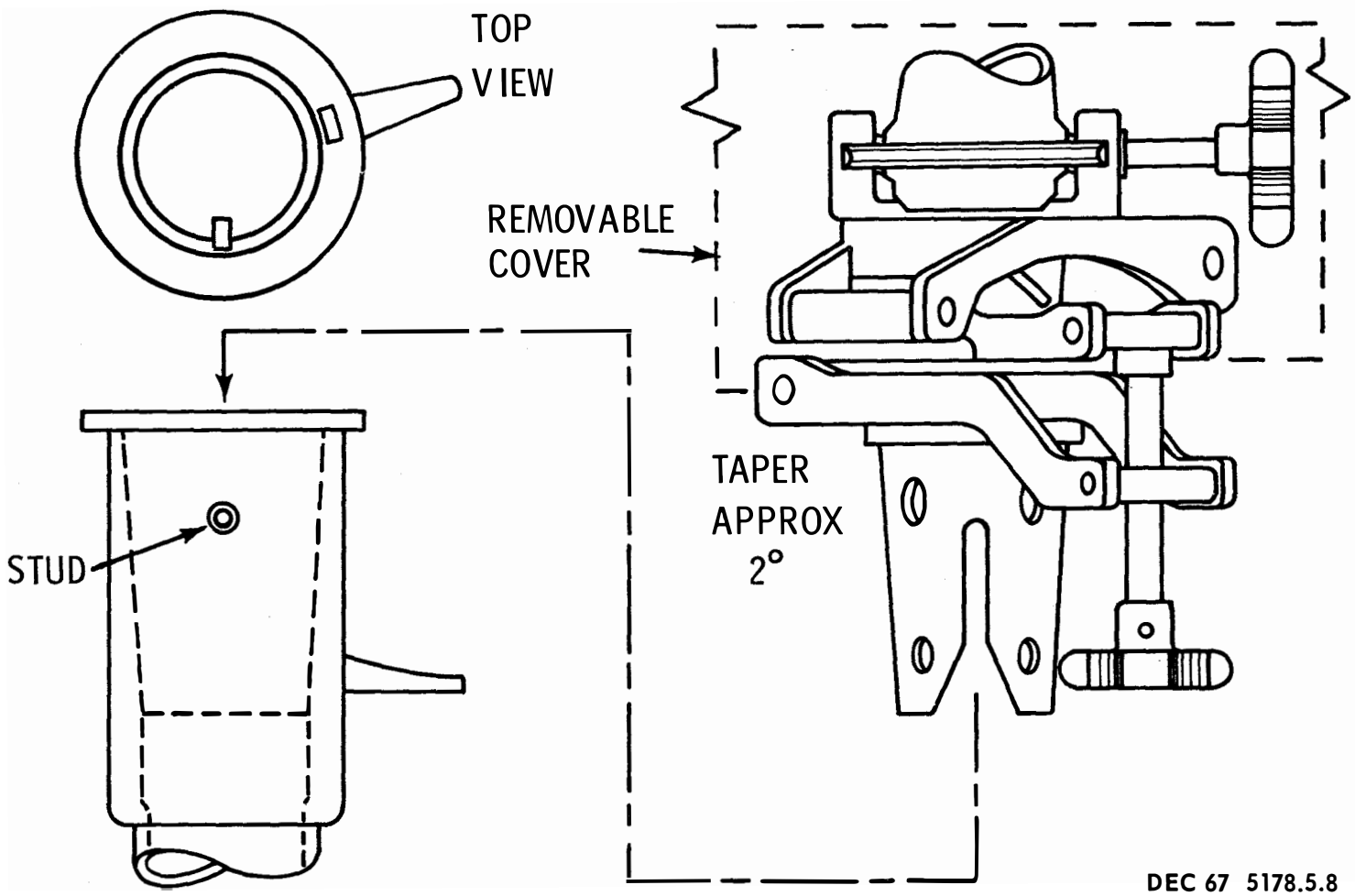

AIMING MECHANISM/ANTENNA

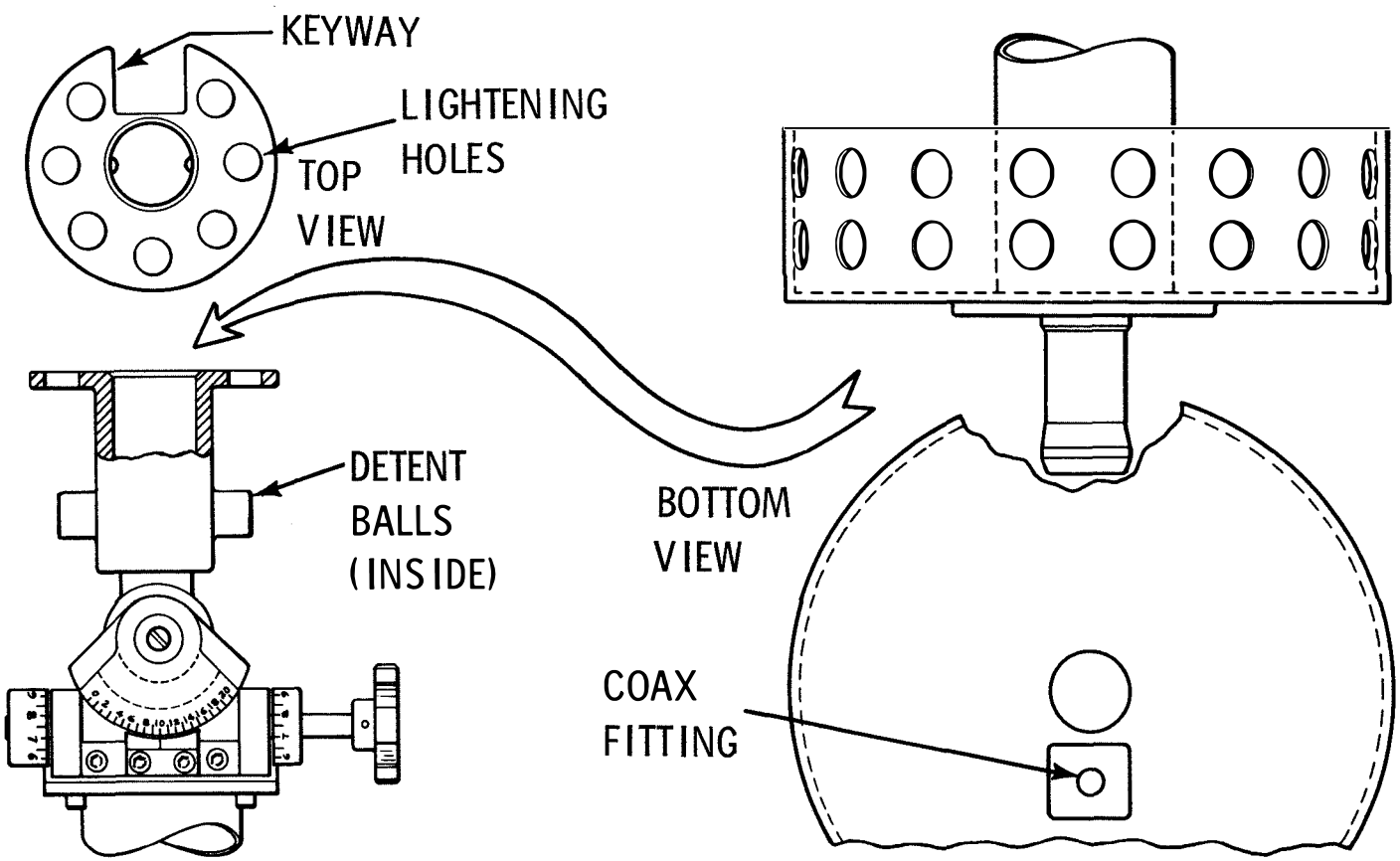

SEPT 68 5178.5.9

SUNSHIELD TIE-DOWN

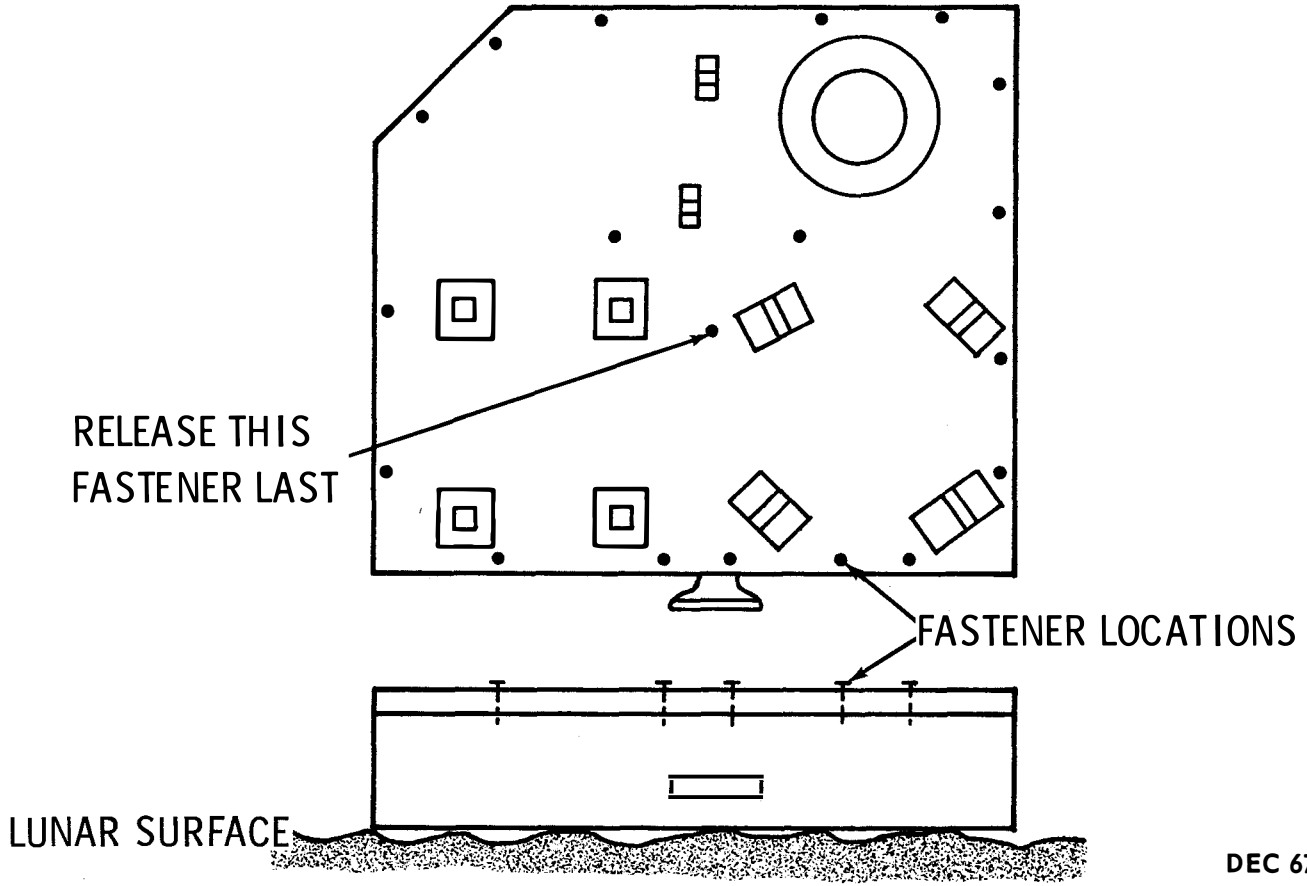

DEC 67 5178.5.10

EXTENDERS

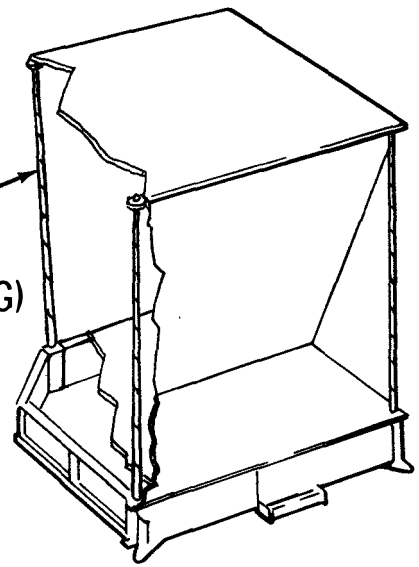

SEPT 68 5178.5.11

SUBPACKAGE 1 EMPLACEMENT CRITERIA

PARAMETER	REQUIREMENT	PRIORITY	INDICATOR	COMMENTS
DISTANCE FROM LM	300 ± 10 FT	2	MAY HAVE RANGE-FINDER	TRADE OFF OF PLSS CONSTRAINTS AGAINST ASCENT STAGE BLAST*
DIRECTION FROM LM	NOT DUE E OR W	2	EYEBALL	AVOID WALKING INTO SUN OR SHADOW
SITE SELECTION	APPROX HORIZ	1	EYEBALL	AVOID CRATERS AND SLOPES FOR THERMAL AND ANTENNA STABILITY
LEVEL, WRT INDICATOR	ACCEPT LOCAL SLOPE	1	BUBBLE	INTERACTS WITH ALIGNMENT
ALIGN, WRT SHADOW	± 5° E-W	1	PARTIAL ROSE (NULL LINE)	THERMAL REQUIREMENT; ROSE ALLOWS 180° ROTATION
SPECIAL REQUIREMENTS	SELECTION OF SITE SHOULD CONSIDER THAT MOST SUBSYSTEMS REQUIRE APPROXIMATELY EQUAL ELEVATIONS FOR CLEAR FIELD OF VIEW (SCIENTIFIC AND THERMAL). *200 FT DISTANCE GIVES ZERO THEORETICAL SAFETY MARGIN, 300 FT GIVES 100%.			

SEPT 68 5.178.5.12

AIMING MECHANISM EMPLACEMENT CRITERIA

PARAMETER	REQUIREMENT	PRIORITY	INDICATOR	COMMENTS
DISTANCE AND DIRECTION	NA	-	-	ATTACHED TO SUBPACKAGE 1
LEVEL, WRT INDICATOR	$\pm 0.55^\circ$ OF VERTICAL	1	BUBBLE	INTERACTS WITH ALIGNMENT
ALIGN, WRT SHADOW	$\pm 0.5^\circ$ E-W	1	NULL LINE	PRECLUDES 180° ROTATION
SPECIAL REQUIREMENTS	NOTE THAT CRITERIA ARE SHOWN FOR BASE OF AIMING MECHANISM; AZIMUTH-ELEVATION GIMBAL SETTINGS ARE FROM SPECIAL TABLES.			

APR 69 5178.5.13

STRUCTURE/THERMAL ALIGNMENT MARKINGS

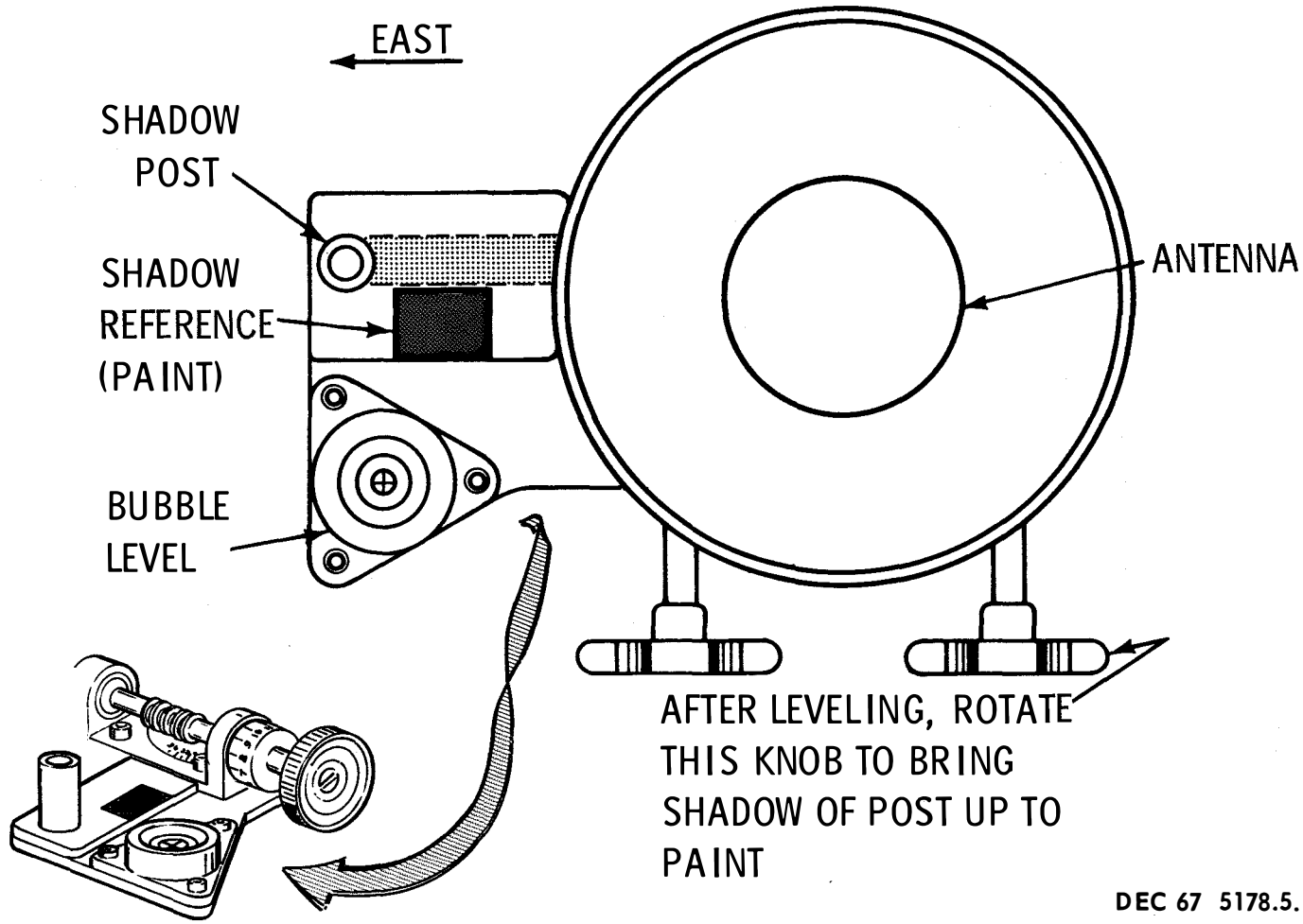

DEC 67 5178.5.14

STRUCTURE/THERMAL TELEMETRY

HK-27	AT-01	SUNSHIELD 1 DEG F
HK-42	AT-02	SUNSHIELD 2 DEG F
HK-04	AT-03	THERM PLT 1 DEG F
HK-28	AT-04	THERM PLT 2 DEG F
HK-43	AT-05	THERM PLT 3 DEG F
HK-58	AT-06	THERM PLT 4 DEG F
HK-71	AT-07	THERM PLT 5 DEG F
HK-59	AT-08	PRI/ST W1 DEG F
HK-87	AT-09	PRI/ST W2 DEG F
HK-15	AT-10	PRI/ST B1 DEG F
HK-88	AT-11	PRI/ST W3 DEG F*
HK-60	AT-12	INSUL INT DEG F
HK-72	AT-13	INSUL EXT DEG F

HK-83	AX-01	DUST CELL 1 DEG F
HK-30	AX-02	DUST CELL 2 DEG F
HK-56	AX-03	DUST CELL 3 DEG F
HK-84	AX-04	DUST 1 OUT MV/CM2
HK-26	AX-05	DUST 2 OUT MV/CM2
HK-41	AX-06	DUST 3 OUT MV/CM2

ALL PARAMETERS SAMPLED ONCE PER 54 SEC ALSEP SEQUENCE

*NOW LOCATED ON POWER DISSIPATION RESISTOR PANEL

APR 69 5178.5.15

STRUCTURE/THERMAL COMMANDS

OCTAL CMD NUMBER

027 DUST CELLS ON
CMD 027 IS A ONE-STATE CMD THAT ACTIVATES THE SOLAR CELL OUTPUTS (3) OF THE DUST DETECTOR

031 DUST CELLS OFF
CMD 031 IS A ONE-STATE CMD THAT DEACTIVATES THE SOLAR CELL OUTPUTS (3) OF THE DUST DETECTOR

NOTE THAT THERE IS EQUAL PROBABILITY OF THE DUST CELLS BEING ON OR OFF WHEN ALSEP STARTS UP INITIALLY ON THE LUNAR SURFACE

055 DSS HTR 1 SEL
CMD 055 ACTUATES RELAY K-14 IN THE PDU APPLYING +29 VDC TO THE 10-WATT HTR IN THE CENT STA AND REMOVING +29 VDC FROM THE 5-WATT HTR

056 DSS HTR 2 SEL
CMD 056 ACTUATES RELAYS K-14 AND K-15 IN THE PDU APPLYING +29 VDC TO THE 5-WATT HTR IN THE CENT STA AND REMOVING +29 VDC FROM THE 10-WATT HTR

057 DSS HTR 2 OFF
CMD 057 ACTUATES RELAY K-15 IN THE PDU REMOVING +29 VDC FROM THE 5-WATT HTR IN THE CENT STA. IF THE 10-WATT HTR IS ON, TRANSMISSION OF THIS CMD WILL HAVE NO EFFECT

024 DSS HTR 3 ON
CMD 024 ACTUATES RELAY K-18 IN THE PDU APPLYING +29 VDC TO THE THERMOSTATICALLY-CONTROLLED 10-WATT HTR IN THE CENT STA

025 DSS HTR 3 OFF
CMD 025 ACTUATES RELAY K-18 IN THE PDU REMOVING +29 VDC FROM THE THERMOSTATICALLY-CONTROLLED 10-WATT HTR IN THE CENT STA

ELECTRICAL POWER SUBSYSTEM

- RADIOISOTOPE THERMOELECTRIC GENERATOR
  - COMPONENTS
  - PERFORMANCE
  - KEY FEATURES
- FUEL TRANSFER AND RTG DEPLOYMENT
- POWER CONDITIONING UNIT
  - FUNCTIONS AND PERFORMANCE
  - POWER/THERMAL INTERACTIONS
- COMMANDS AND DATA

NOV 68 5178.6.1

POWER GENERATING FUNCTION

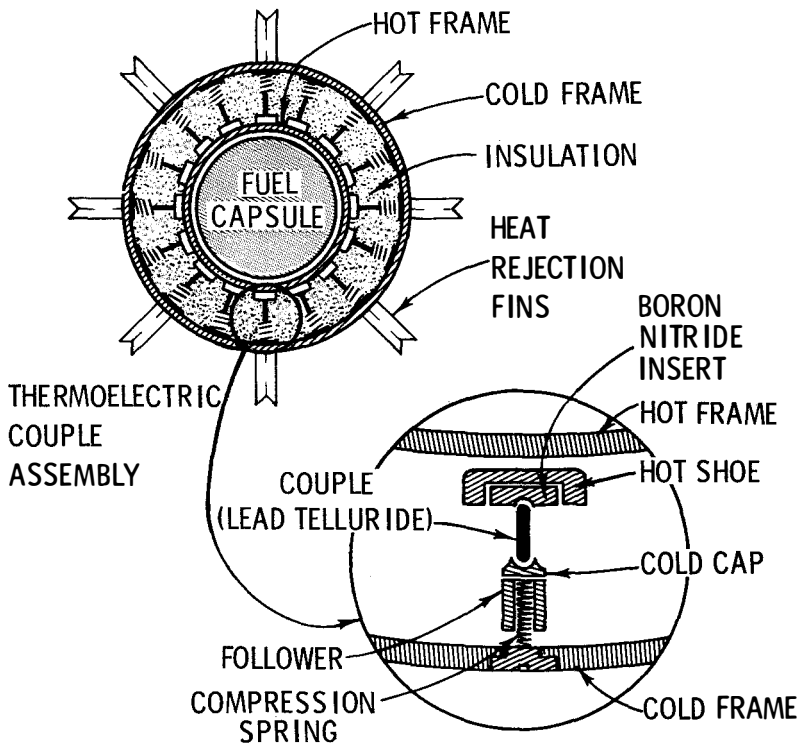

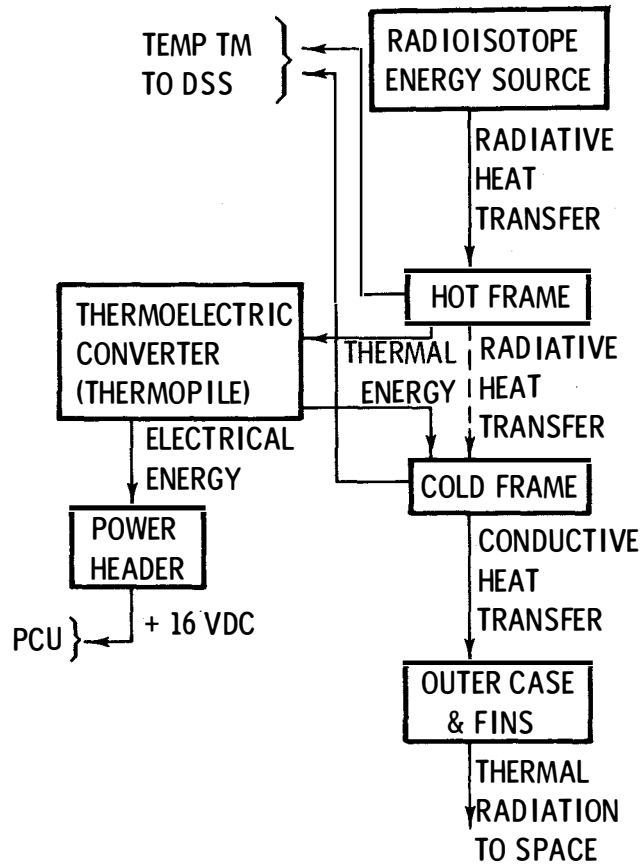

NOV 68 5178.6.2

RTG PERFORMANCE

OUTPUT POWER: 56.2 W (ONE YR) AND UP TO 74 W

OUTPUT VOLTAGE: 16 VDC (NOMINAL)

CURRENT: 4 AMP (APPROX)

OVERALL EFFICIENCY: 4 % (APPROX)

HOT JUNCTION TEMP: 1100° F* (MAX)

COLD JUNCTION TEMP: 600° F* (MAX)

FUEL CAPSULE THERMAL OUTPUT: 1430 TO 1520 W

FUEL CLAD TEMP: 1390° F (MAX)

---

*LUNAR DAY (NIGHT PERF NEARLY SAME)

RTG DAY/NIGHT EFFECTS

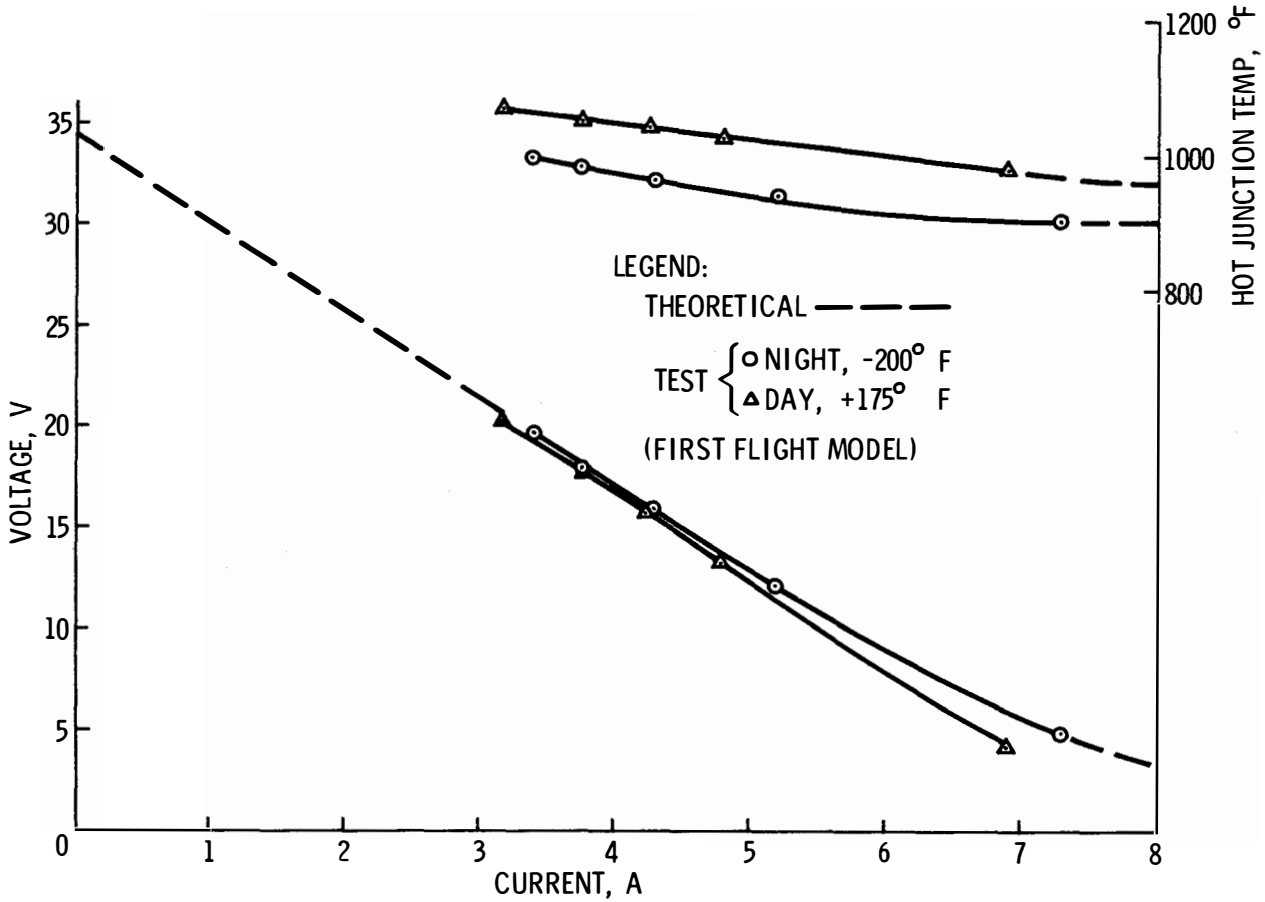

JAN 68 5178.6.4

RTG SUBASSEMBLIES

- THERMOPILE
  - COUPLES, PLUS HOT SHOES, ETC.
  - SPRING LOADED TO KEEP THE THERMOELECTRIC ELEMENTS IN COMPRESSIVE LOADING
- HERMETIC SEAL
  - FORWARD (TOP) SEAL SECURES HOT FRAME TO OUTER CASE
  - AFT (BOTTOM) SEAL PROVIDES END COVER FOR OUTER CASE
  - POWER LEADS ENTER THROUGH AFT SEAL
- STRUCTURE AND HEAT REJECTION
  - CONTAIN AND SUPPORT OTHER EQUIPMENT
  - DISTRIBUTE THERMAL ENERGY (PRIMARILY IN RADIAL DIRECTION)
- WIRING
  - SERIES-PARALLEL ARRANGEMENT OF THERMOELECTRIC ELEMENTS
  - FIELD CANCELLATION COILS AT EACH END OF GENERATOR LIMIT CURRENT-INDUCED MAGNETIC FIELD INTENSITY TO 0.24 GAMMAS AT ONE METER, ALONG AXIAL CENTERLINE

JAN 68 5178.6.5

RTG FUEL CASK

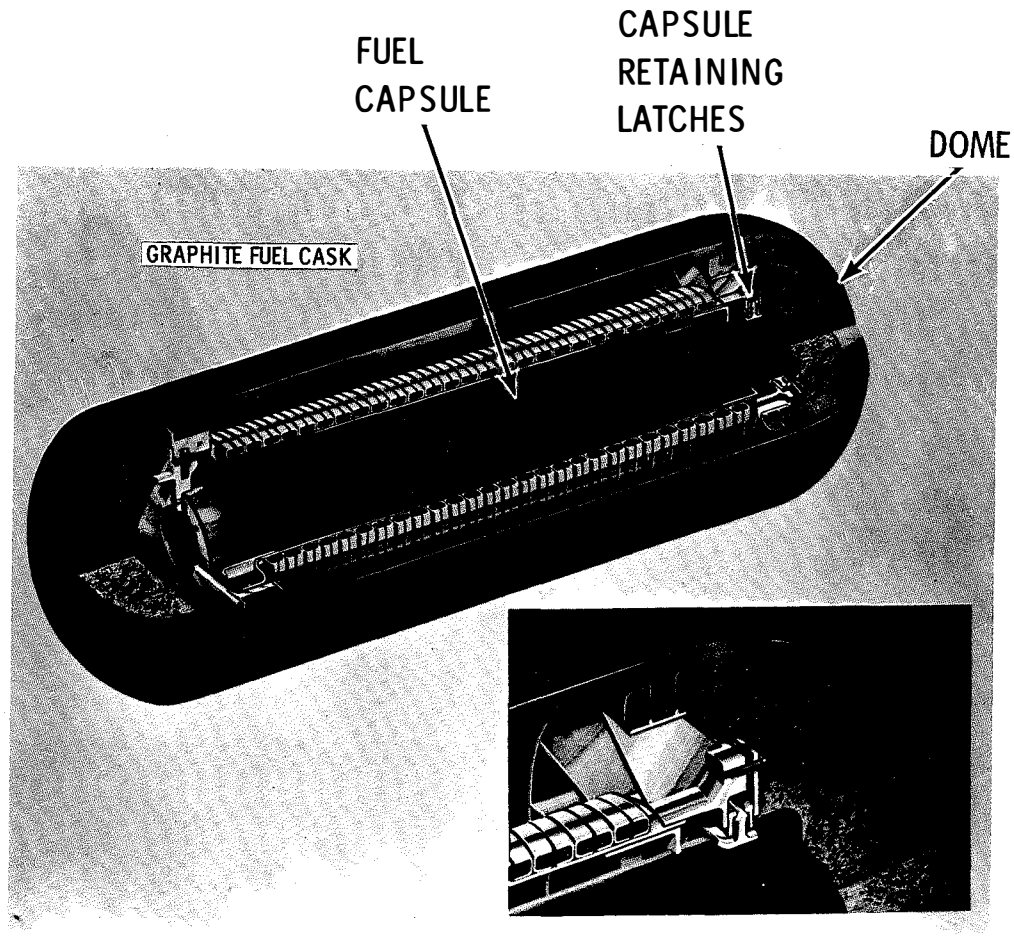

- CONSTRUCTED PRIMARILY OF GRAPHITE
- CONTAINS FUEL CAPSULE DURING TRANSLUNAR FLIGHT
- PROVIDES REENTRY PROTECTION IN CASE OF ORBITAL ABORT
- PROVIDES FREE RADIATION SURFACE FOR CAPSULE HEAT REJECTION
- MOUNTED ON LM EXTERIOR

JAN 68 5178.6.6

RTG FUEL TRANSFER

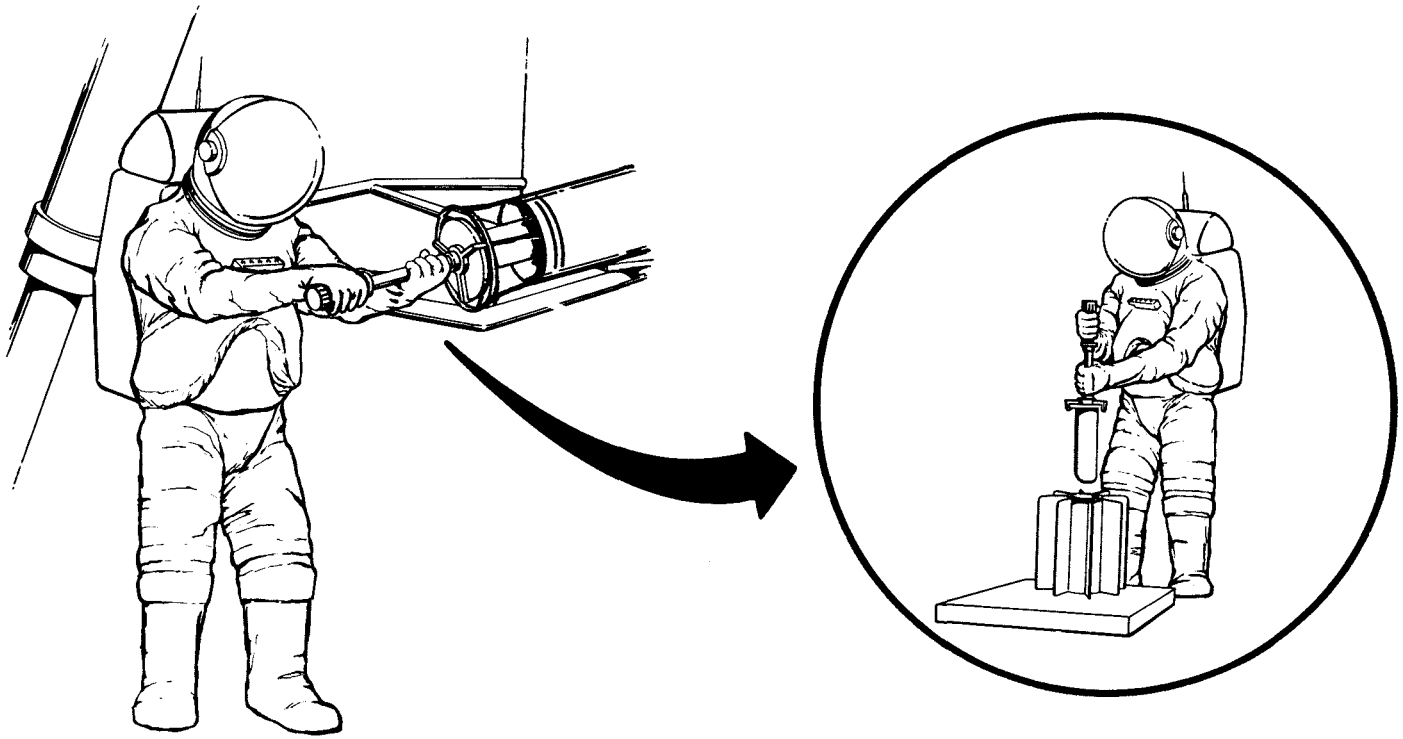

APR 69 5178.6.7

RTG EMPLACEMENT CRITERIA

PARAMETER	REQUIREMENT	PRIORITY	INDICATOR	COMMENTS
DISTANCE FROM SUBPACKAGE 1	11 ± 1 ft	2	12 ft CABLE	ASTRONAUT SAFETY AND MAXIMUM VIEW OF SPACE
DIRECTION FROM SUBPACKAGE 1	DUE E OR W	1	EYEBALL	MINIMIZE THERMAL LOAD ON SUBPACKAGE 1
SITE SELECTION	APPROX HORIZ	1	EYEBALL	AVOID CRATERS AND SLOPES FOR THERMAL REASONS
LEVEL	± 5° OF VERTICAL	1	EYEBALL	THERMAL REASONS
ALIGN	NONE	3	-	FAVOR CABLE EXIT
SPECIAL REQUIREMENTS	RTG NEEDS APPROXIMATELY HEMISPHERE VIEW OF SPACE FOR THERMAL REASONS; NO EXPERIMENT WILL BE WITHIN 10 FT DUE TO THEIR OWN REQUIREMENTS.			

JAN 68 5178.6.8

POWER DISTRIBUTION UNIT

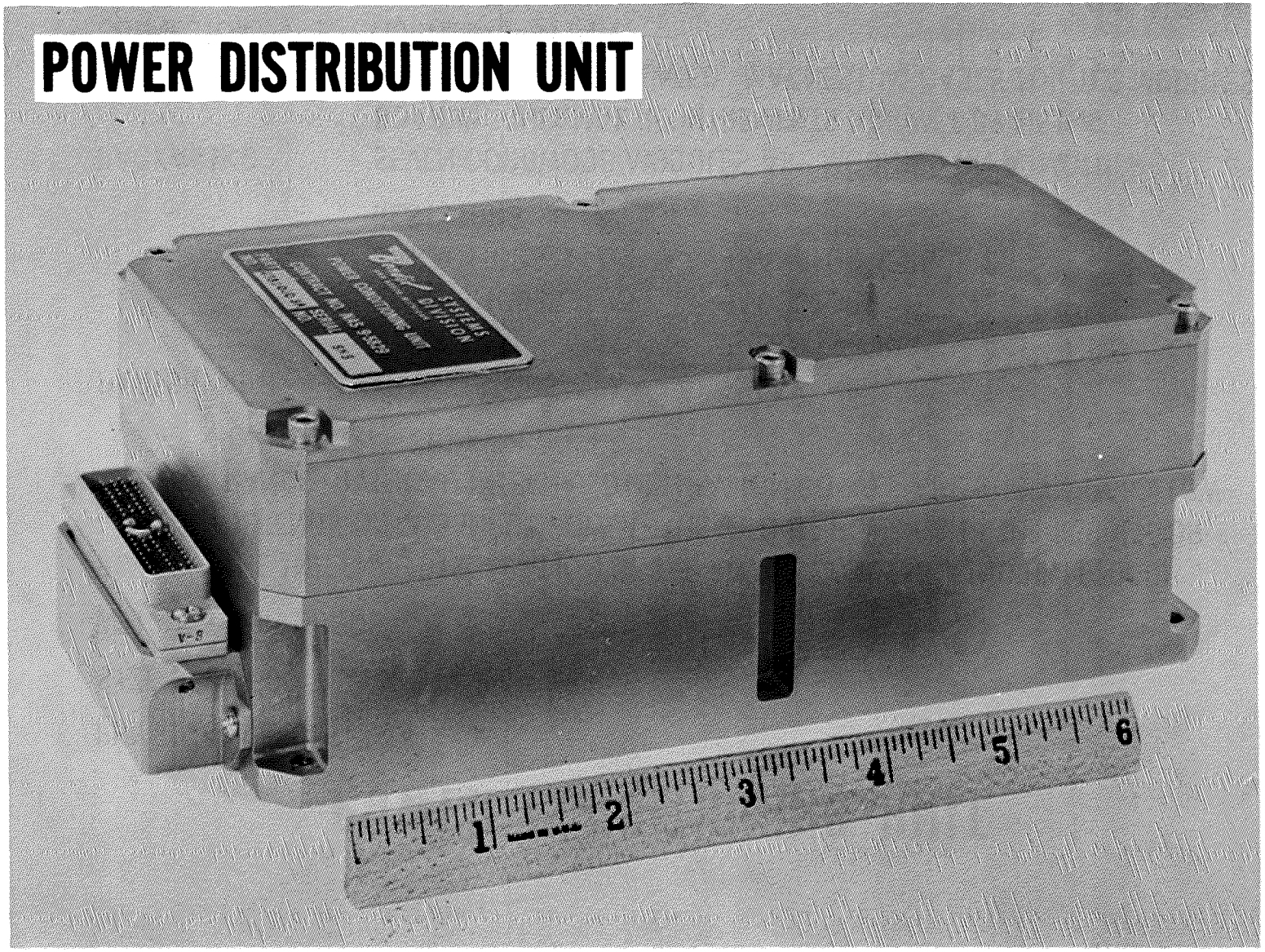

JAN 68 5178.6.9

POWER CONDITIONING UNIT

PHYSICAL DESCRIPTION

SIZE - 8.36 X 4.14 X 2.94 IN.

WEIGHT - 4.5 POUNDS

POWER - THE INTERNAL DISSIPATION OF THE POWER CONDITIONING UNIT (PCU) DEPENDS ON THE INPUT POWER, THE OUTPUT POWER AND THE REGULATOR RANGE. TYPICAL INTERNAL DISSIPATION CURVES ARE SHOWN IN FOLLOWING INFORMATION.

PARTS COUNT -

TRANSISTORS	27	RELAY	1
DIODES	44	THERMISTORS	4
ZENER DIODES	4	INDUCTORS	11
CAPACITORS	71	TRANSFORMERS	8
RESISTORS	87		

PACKAGING - SEVEN CORDWOOD MODULES ARE MOUNTED ON A "MOTHER BOARD". THERMAL REQUIREMENTS ARE MET BY USING MACHINED, GOLD-PLATED, MAGNESIUM CASES FOR THE MODULES.

CONNECTOR - HUGHES - 88 PIN

PCU FEATURES

* CONSISTS OF REDUNDANT POWER CONDITIONERS WITH BOTH AUTOMATIC AND COMMANDABLE SELECTION OF THE STANDBY SECTION. OVER/UNDER VOLTAGES ARE SENSED FOR AUTOMATIC SWITCHING FROM PCU#1 TO PCU#2.
* PROVIDES 6 REGULATED DC OUTPUT VOLTAGES WITH NOMINAL VALUES OF +29, +15, +12, +5, -6, AND -12 VOLTS.
* CONTAINS FILTERS TO LIMIT OUTPUT RIPPLE VOLTAGE TO BE APPROXIMATELY 150 MILLIVOLTS PEAK-TO-PEAK.
* OPERATES AT AN EFFICIENCY OF ABOUT 85% WITH A 48 WATT LOAD.
* HAS "HOLD-OFF" CIRCUIT ON PC#1 TO PREVENT STARTING UNTIL RTG POWER IS SUFFICIENT TO PERMIT PCU OPERATION WITH REGULATION.
* TO MAINTAIN THE RTG TEMPERATURE WITHIN SAFE LIMITS, THE PCU HOLDS THE RTG LOAD AT A (RELATIVELY) CONSTANT VALUE.
* PROVIDES TM SIGNALS FOR MONITORING RTG CURRENT, RTG VOLTAGE, SHUNT REGULATOR CURRENT AND TEMPERATURES.
* PROVIDES RESERVE POWER REFERENCE AND RESERVE POWER LEVEL SIGNALS TO RIPPLE-OFF CIRCUITS IN THE PDU.

SIMPLIFIED BLOCK DIAGRAM - PCU

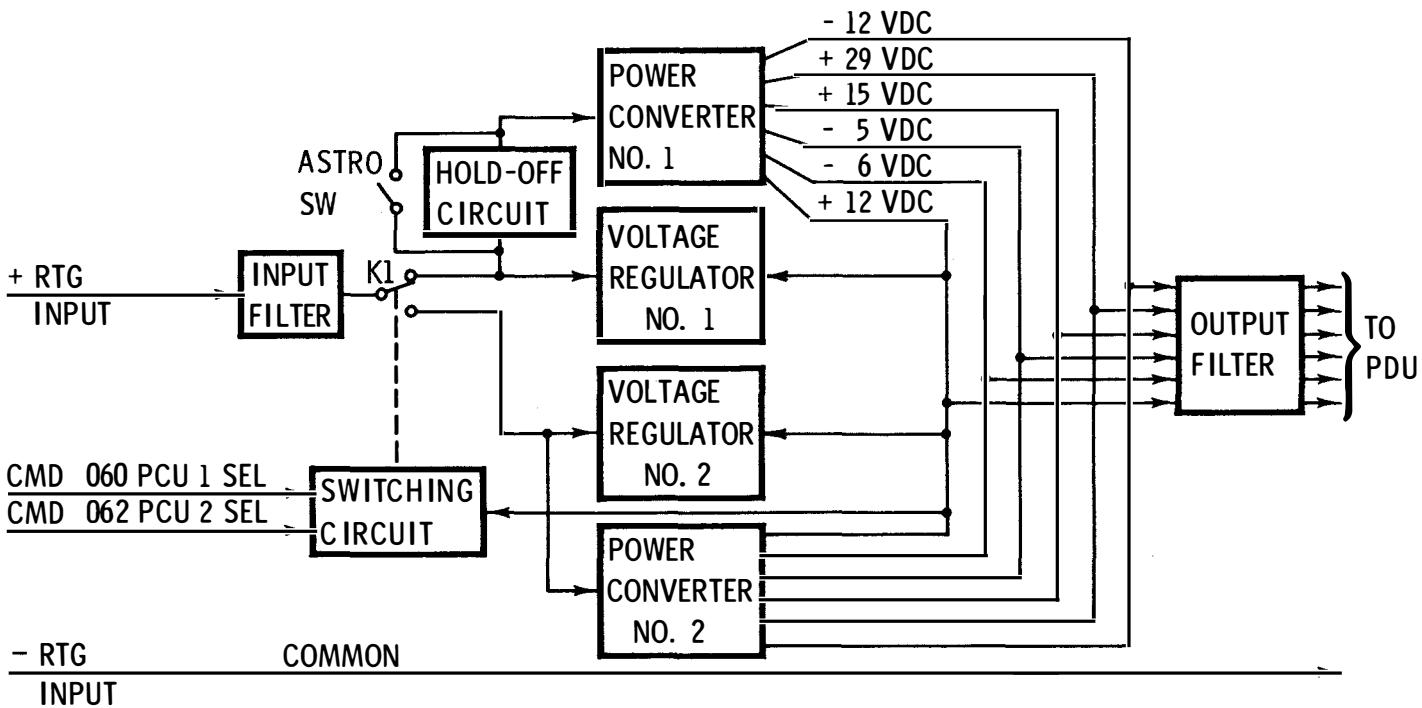

NOV 68 5178.6.12

PCU 1 DIAGRAM

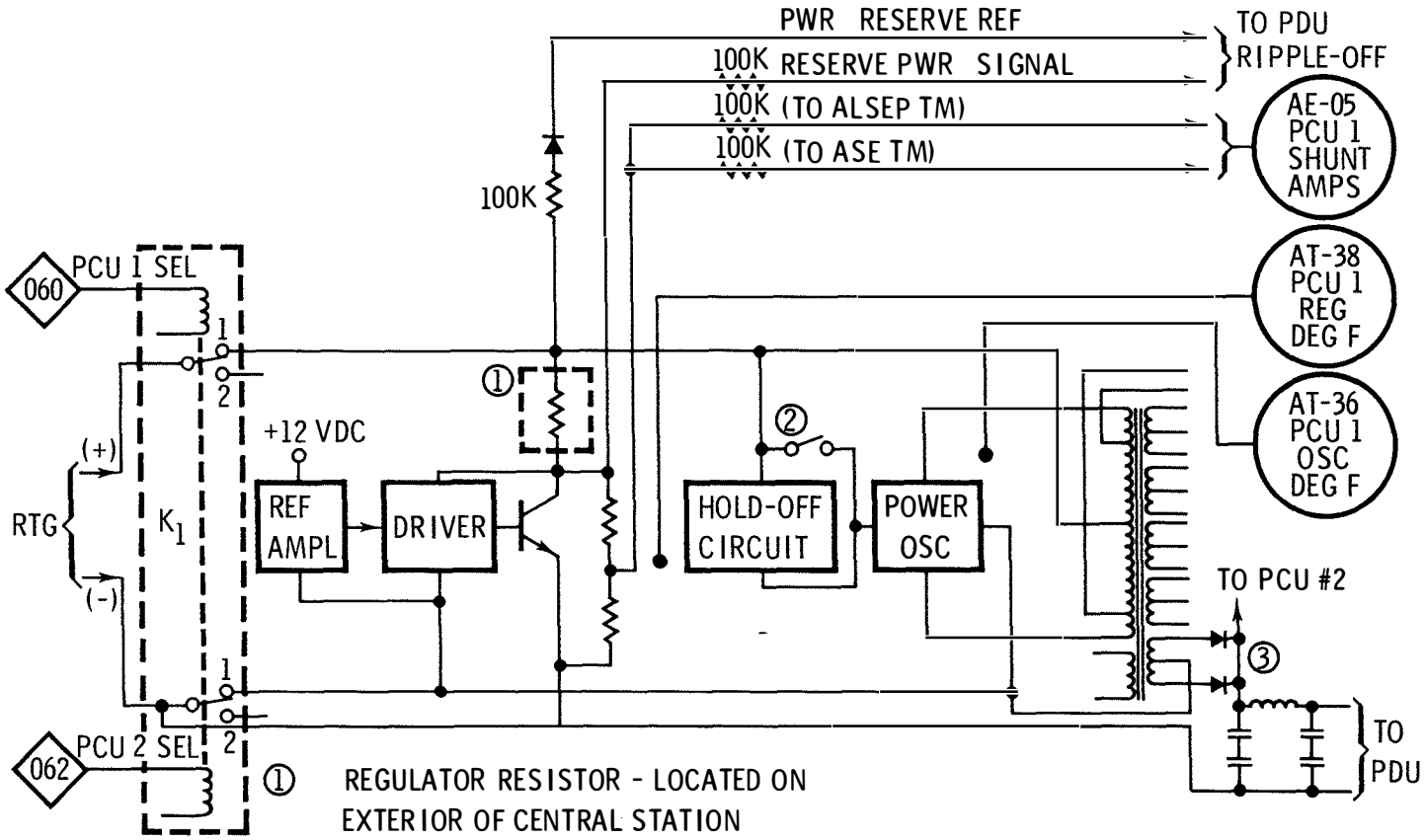

① REGULATOR RESISTOR - LOCATED ON EXTERIOR OF CENTRAL STATION

② HOLD-OFF CIRCUIT ON PCU #1 ONLY. SWITCH IS ASTRONAUT SWITCH S-1

③ TYPICAL (1 OF 6) RECTIFIER/FILTER CIRCUIT. FILTER IS COMMON TO BOTH PCU #1 & PCU #2.

NOV 68 5178.6.13

RTG CURRENT AND VOLTAGE TM

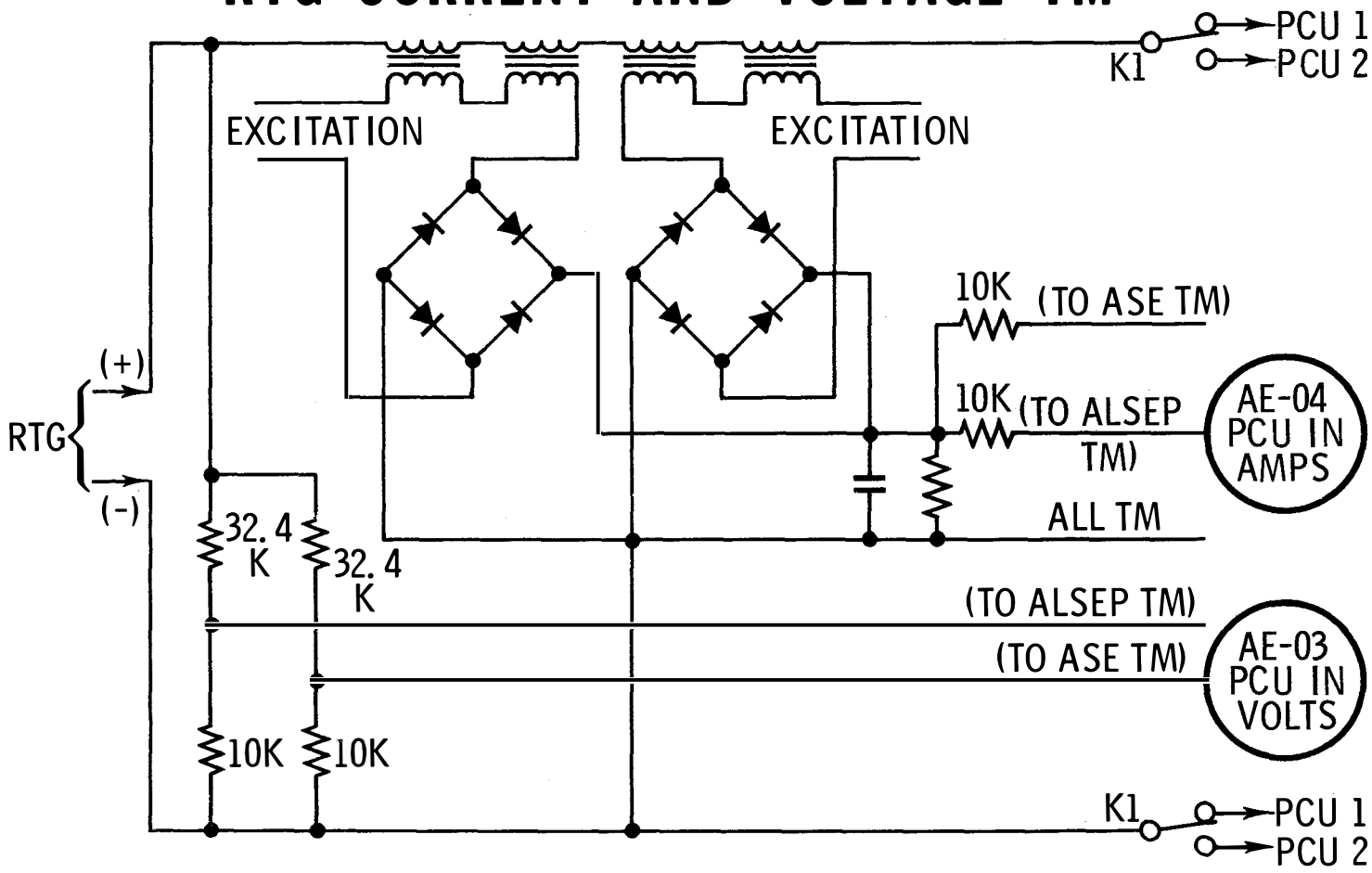

NOV 68 5178.6.14

PCU SELECTION FUNCTION

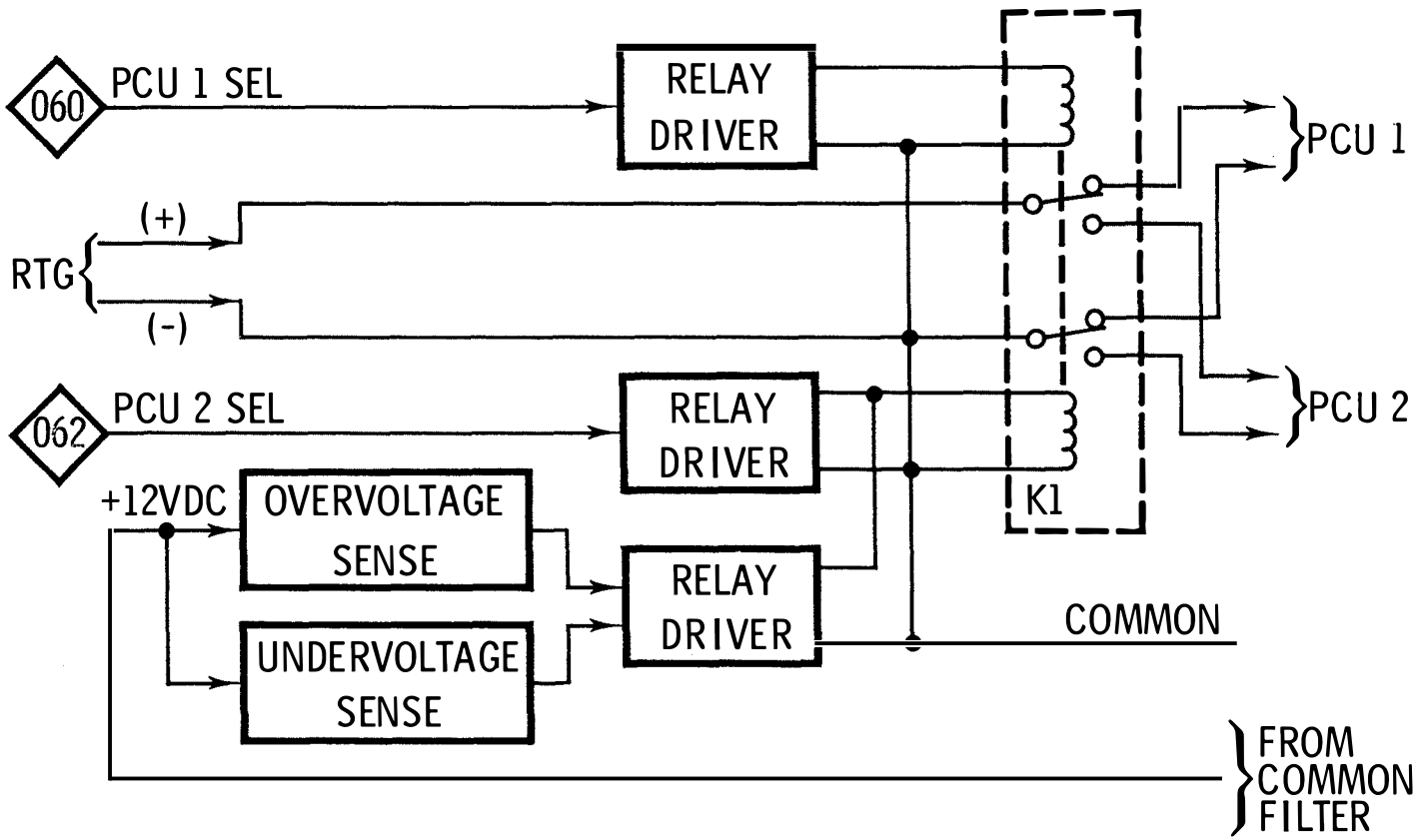

JAN 68 5178.6.15

PCU POWER/THERMAL RELATIONSHIP

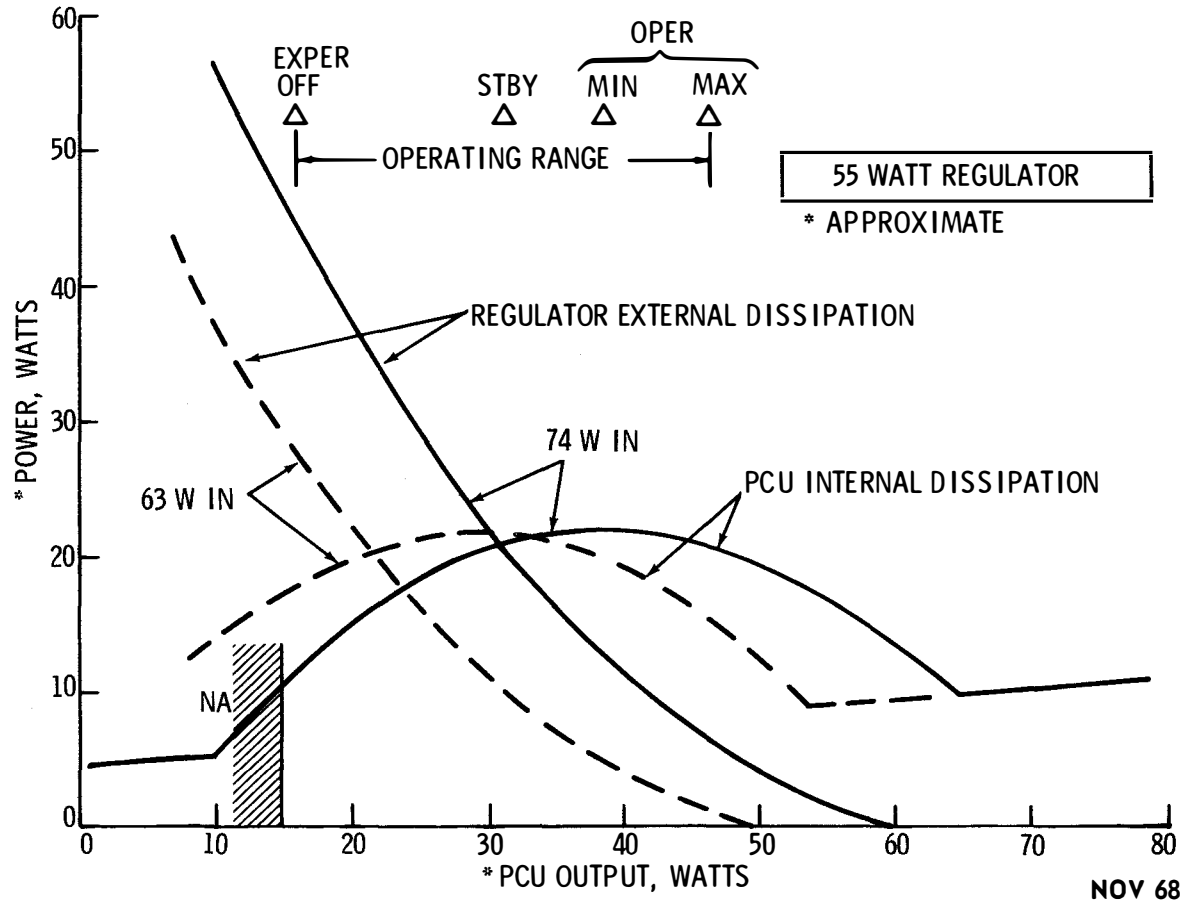

NOV 68 5178.6.16

EPS DATA

FROM RTG	FROM PCU	FROM PDU
AR-01 HOT FRAME 1 DEG F	AT-36 PCU 1 OSC DEG F	AE-07 PCU + 29V OUT
AR-02 HOT FRAME 2 DEG F	AT-37 PCU 2 OSC DEG F	AE-08 PCU + 15V OUT
AR-03 HOT FRAME 3 DEG F	AT-38 PCU 1 REG DEG F	AE-09 PCU + 12V OUT
AR-04 CLD FRAME 1 DEG F	AT-39 PCU 2 REG DEG F	AE-10 PCU + 5V OUT
AR-05 CLD FRAME 2 DEG F	AE-03 PCU IN VOLTS	AE-11 PCU - 12V OUT
AR-06 CLD FRAME 3 DEG F	AE-04 PCU IN AMPS	AE-12 PCU - 6V OUT
	AE-05 PCU 1 SHUNT AMPS	
	AE-06 PCU 2 SHUNT AMPS	

EPS COMMANDS

OCTAL CMD NUMBERS

• 017 DISSIP R1 ON

THIS CMD ACTUATES RELAY K-16, IN THE PDU, TO THE POSITION THAT APPLIES +29 VDC TO A 7-WATT POWER DISSIPATION RESISTOR, AND IS USED TO OPTIMIZE THE LOAD ON THE PCU.

• 021 DISSIP R1 OFF

THIS CMD ACTUATES RELAY K-16, IN THE PDU, TO THE POSITION THAT REMOVES +29 VDC FROM THE 7-WATT POWER DISSIPATION RESISTOR.

• 022 DISSIP R2 ON

THIS CMD ACTUATES RELAY K-17, IN THE PDU, TO THE POSITION THAT APPLIES +29 VDC TO A 14-WATT POWER DISSIPATION RESISTOR, AND IS USED TO OPTIMIZE THE LOAD ON THE PCU.

• 023 DISSIP R2 OFF

THIS CMD ACTUATES RELAY K-17, IN THE PDU, TO THE POSITION THAT REMOVES +29 VDC FROM THE 14-WATT POWER DISSIPATION RESISTOR.

• 060 PCU 1 SEL

THIS CMD ACTUATES RELAY K-01, IN THE PCU, WHICH APPLIES +16 VDC FROM THE RTG TO PCU 1 AND SIMULTANEOUSLY DEENERGIZES PCU 2. PCU 1 IS PRESET TO BE ENERGIZED AT INITIAL LUNAR ACTIVATION. NOTE THAT THERE IS AN AUTOMATIC SWITCH-OVER FEATURE TO PCU 2 IN THE EVENT THE +12 VDC BUS VARIES MORE THAN ±1 VDC. ADDING OR REMOVING ELECTRICAL LOADS (VIA GROUND COMMANDS) ON PCU 1 CAN PREVENT THE +12 VDC BUS FROM VARYING OUT OF LIMITS. IN THE EVENT AUTOMATIC SWITCH-OVER TO PCU 2 HAS OCCURRED, THIS COMMAND MUST BE FLAGGED AS HIGHLY CRITICAL. THE CAUSE OF THE SWITCH-OVER MUST BE DETERMINED BEFORE THIS COMMAND IS EXECUTED.

• 062 PCU 2 SEL

THIS CMD ACTUATES RELAY K-01, IN THE PCU, WHICH APPLIES +16 VDC FROM THE RTG TO PCU 2 AND SIMULTANEOUSLY DEENERGIZES PCU 1. NOTE THAT AT THE TIME OF LUNAR ACTIVATION, PCU 2 IS DEENERGIZED, WITH NO MEANS TO DETERMINE ITS CONDITION. FURTHER NOTE THAT THERE IS NO AUTOMATIC SWITCH-OVER FROM PCU 2 TO PCU 1. THIS SITUATION, THEREFORE, MAKES THIS COMMAND HIGHLY CRITICAL. THIS COMMAND SHOULD BE EXECUTED ONLY AFTER DETERMINING THAT PCU 1 IS ON THE VERGE OF FAILING.

COMMAND AND TELEMETRY LINKS

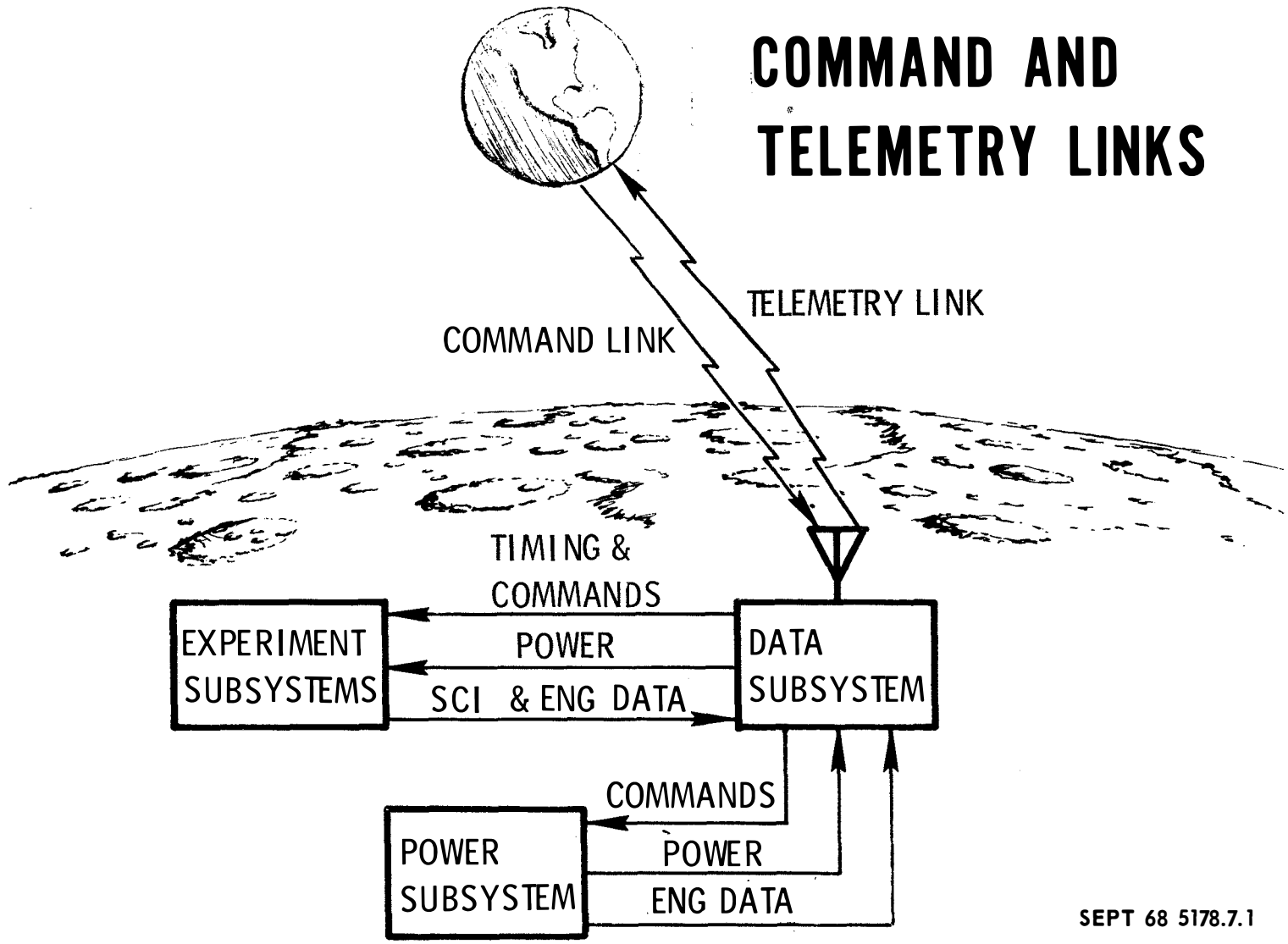

SEPT 68 5178.7.1

CENTRAL STATION DEPLOYED CONFIGURATION

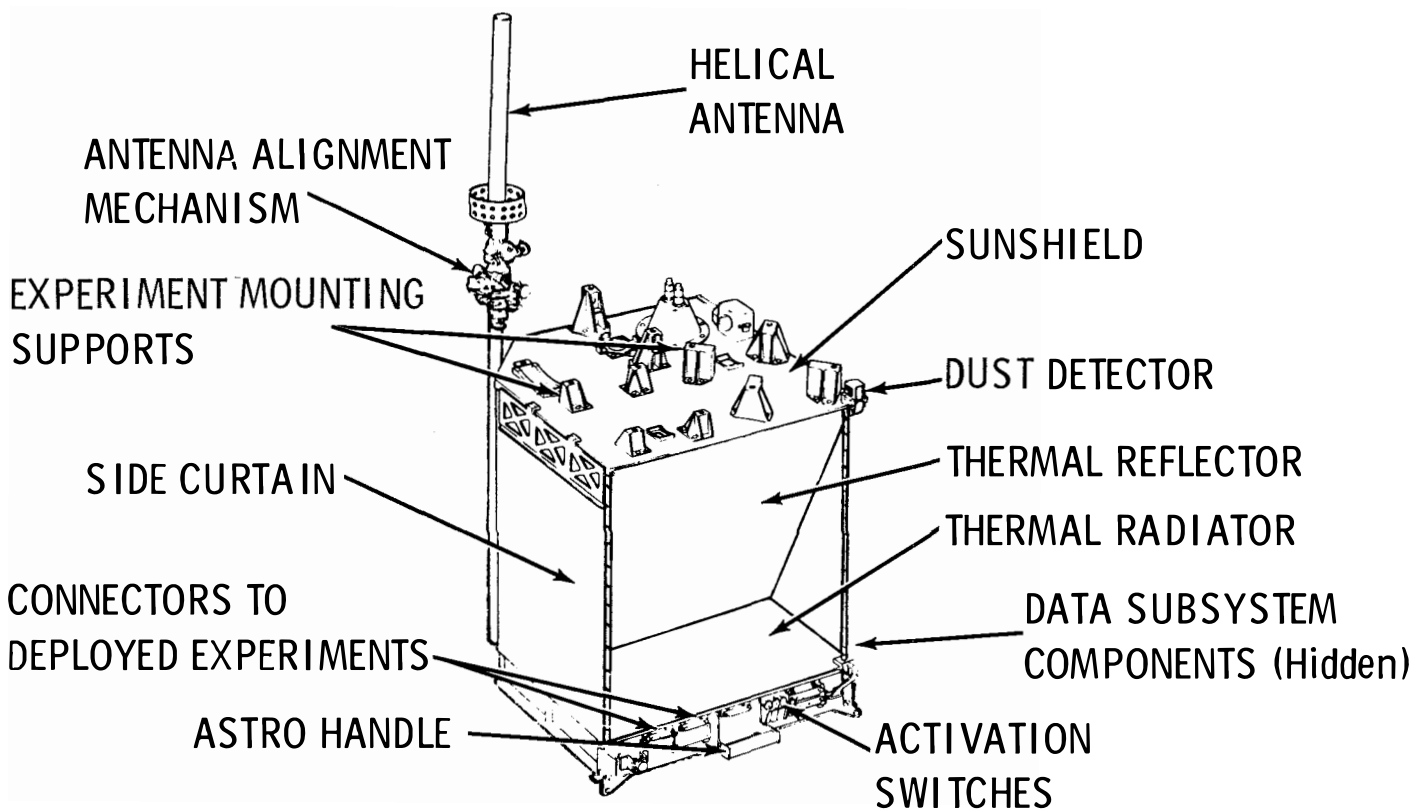

APR 69 5178.7.2

CENTRAL STATION
DATA SUBSYSTEM COMPONENTS

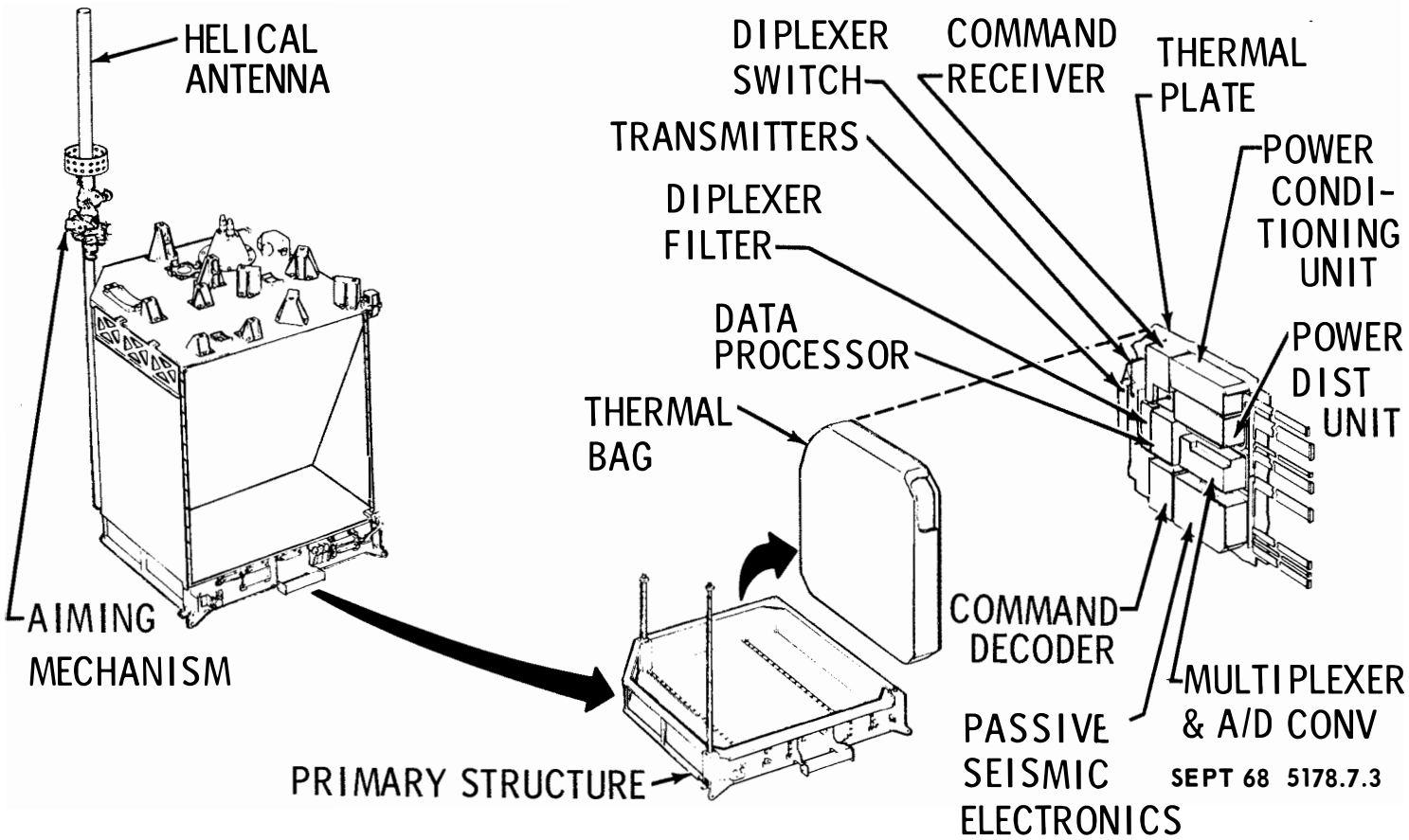

CENTRAL STATION SENSORS AND HEATERS

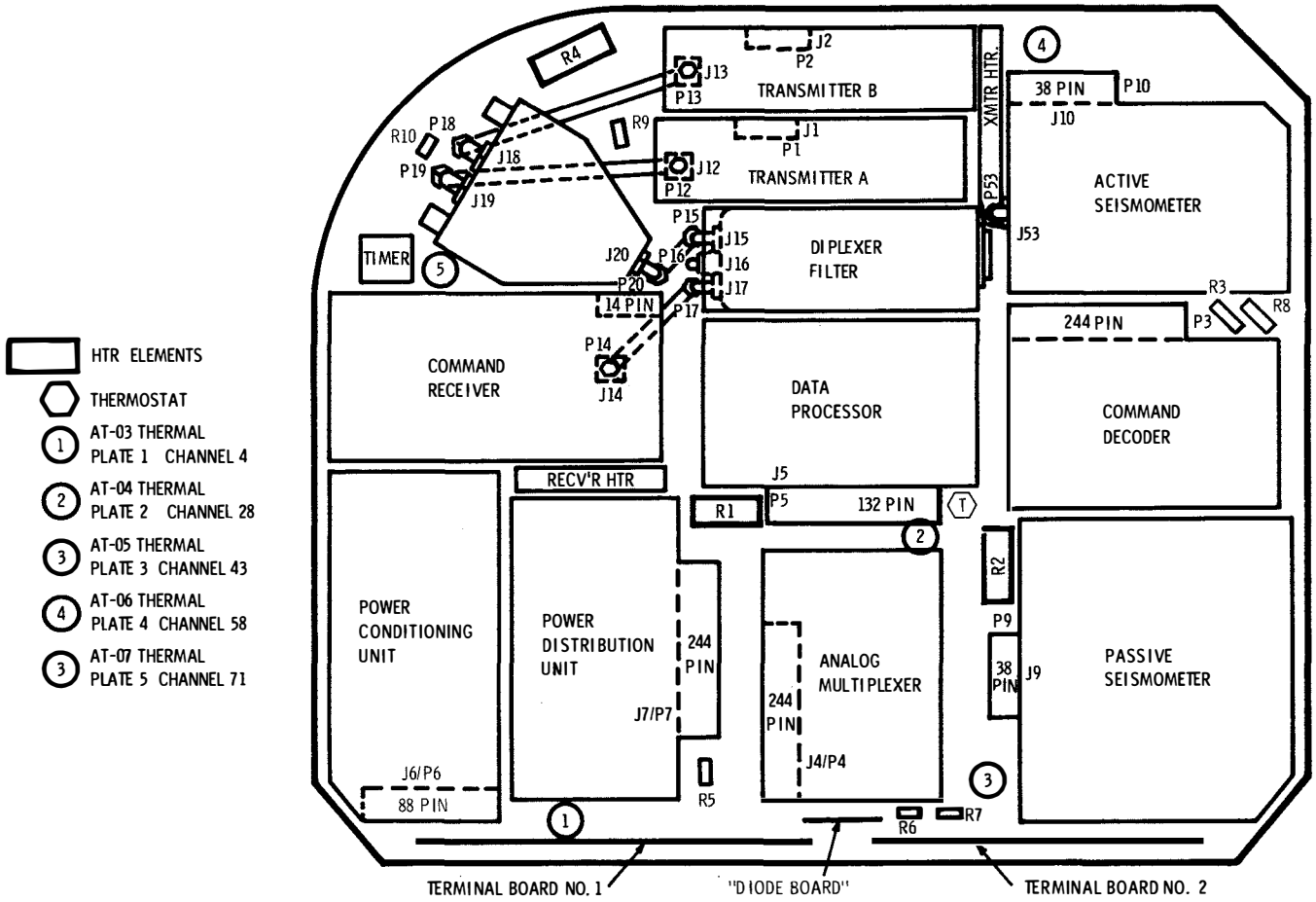

SEPT 68 5178.7.4

CENTRAL STATION LAYOUT

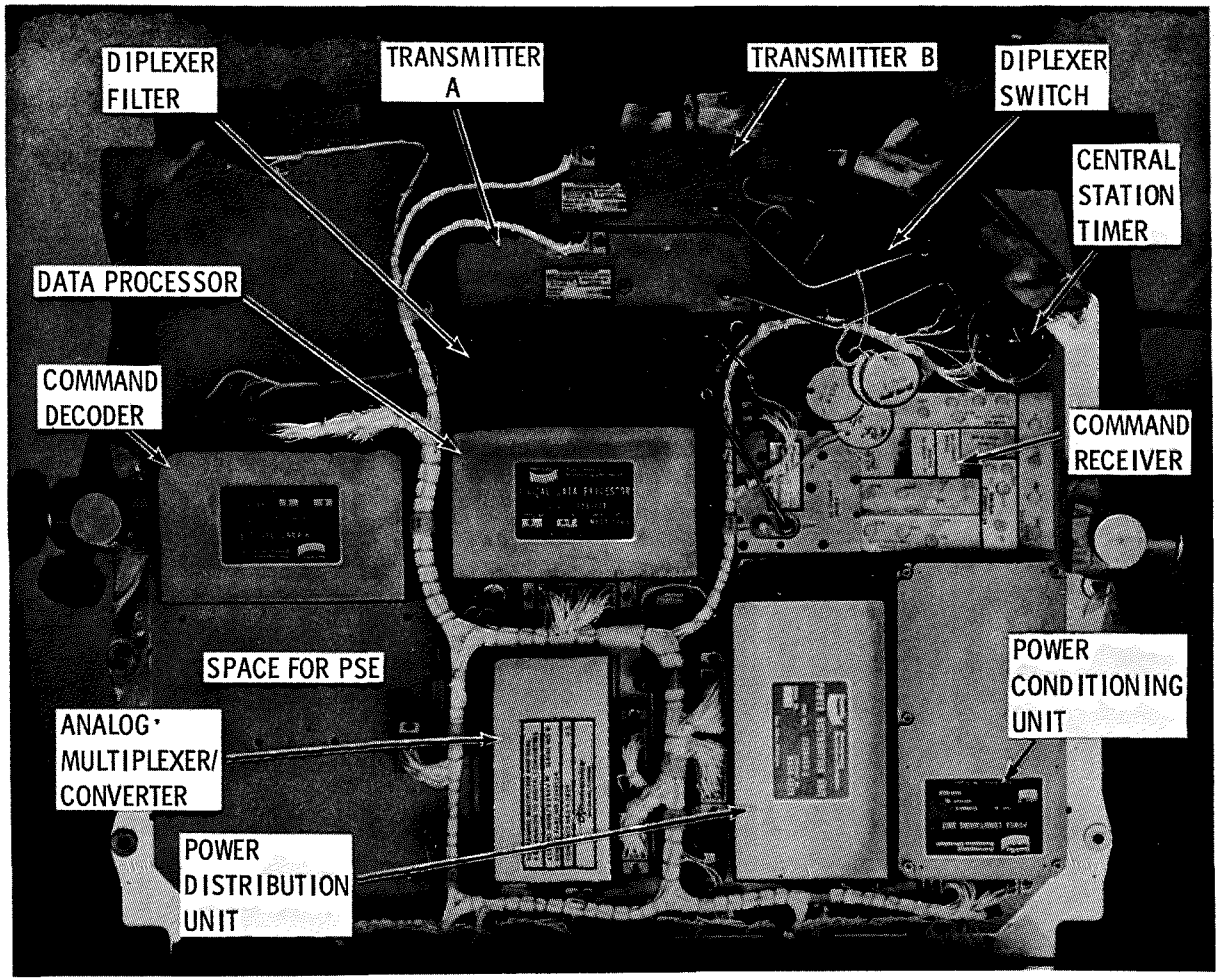

NOV 68 5178.7.5

DATA SUBSYSTEM HARDWARE

ITEM	FUNCTION
(A) POWER DISTRIBUTION & SIGNAL CONDITIONER	CONTROL OF POWER SWITCHING AS COMMANDED AND CONDITIONING OF ENGINEERING STATUS DATA
(B) COMMAND DECODER	DECODE RECEIVED SIGNAL & ISSUE COMMANDS TO THE SYSTEM
(C) DATA PROCESSOR	COLLECT AND FORMAT SCIENTIFIC OUTPUTS FROM THE EXPERIMENTS. COLLECT AND CONVERT ANALOG HOUSEKEEPING DATA INTO DIGITAL FORM
(D) COMMAND RECEIVER	ACCEPT THE EARTH-TO-MOON UPLINK SIGNAL
(E) TRANSMITTER	GENERATE MOON-TO-EARTH DOWNLINK SIGNAL
(F) DI PLEXER SWITCH	CONNECT EITHER TRANSMITTER TO THE ANTENNA
(G) DIPLEXER FILTER	CONNECT RECEIVER INPUT AND TRANSMITTER OUTPUT TO THE ANTENNA WITH REQUIRED RECEIVER/ TRANSMITTER ISOLATION
(H) CENTRAL STATION TIMER	PROVIDE AUTOMATIC ACTIVATION FEATURES (AS A BACK-UP) AND SWITCH OFF TRANSMITTERS AFTER 2 YEARS
(I) ANTENNA	RECEIVE AND RADIATE UP-AND-DOWN LINK RF SIGNALS
(J) ANTENNA AIMING MECHANISM	MEANS OF ADJUSTMENT FOR DIRECTING ANTENNA TO EARTH
(K) MISCELLANEOUS- COMPRISING:-	
i. CENTRAL STATION HEATERS	MAINTAIN TEMPERATURE DURING LUNAR NIGHT.
ii. ASTRONAUT SWITCHES	PROVIDE A BACK-UP FEATURE FOR LOCAL ALSEP ACTIVATION
iii. TEMPERATURE SENSORS	SUPPLY TEMPERATURE DATA OF SELECTED POINTS AROUND THE CENTRAL STATION

NOV 67 5178.7.6

DATA SUBSYSTEM BLOCK DIAGRAM

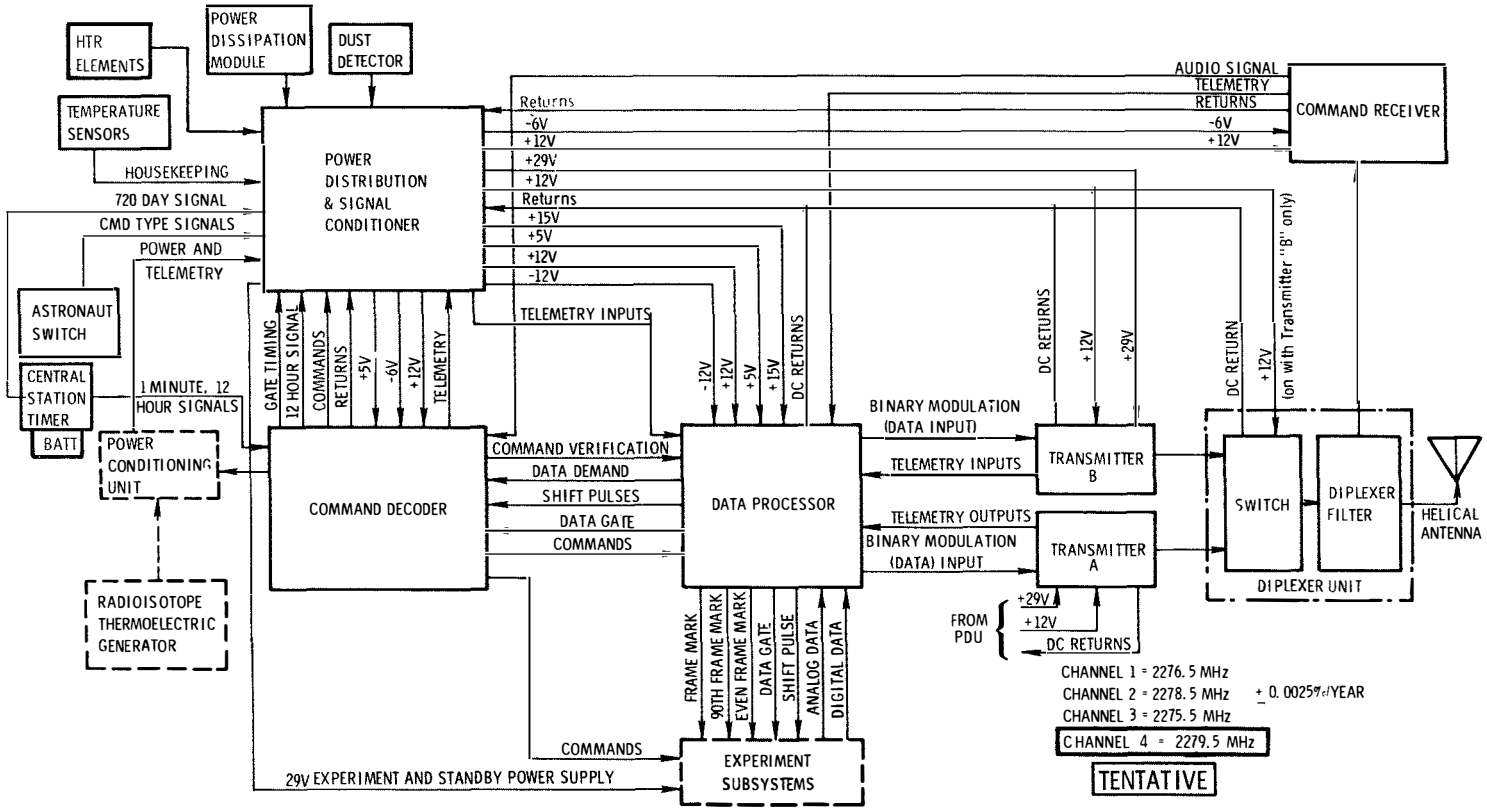

SEPT 68 5178.7.7

SUMMARY OF DATA S/S COMPONENTS

COMPONENT	VOLTAGE/POWER* REQUIREMENTS		TOTAL POWER	SIZE, IN.	WEIGHT LBs	RELIABILITY
POWER DISTRIBUTION UNIT	+29V	375 mw				
	+15V	75 mw				
	±12V	735 mw				
	± 5V	85 mw				
	- 6V	8 mw				
	-12V	475 mw	1753 mw	2.8x4.0x7.25	2.29	0.94484
COMMAND DECODER	+12V	325 mw				
	± 5V	775 mw				
	- 6V	230 mw	1330 mw	2.8x3.94x6.25	2.68	0.98304
DATA PROCESSOR	+12V	50 mw				
	+ 5V	450 mw	500 mw	2.8x3.94x6.25	2.64	0.95863
MULTIPLEXER	+15V	65 mw				
	±12V	150 mw				
	± 5V	1100 mw				
	-12V	120 mw	1435 mw	2.62x4.23x5.92	1.89	
TRANSMITTER (EACH)	+29V	8000 mw				0.9796
	+12V	500 mw	8500 mw	1.5x2.0x7.5	1.17	
RECEIVER	+12V	665 mw		1.5x4.0x8.0	3.01	0.98888
	- 6V	30 mw	695 mw			
DIPLEXER SWITCH	+12V	150 mw	150 mw	2.1x4.0x4.5	1.31	0.9997
DIPLEXER FILTER	–	–	–	2.5x2.5x7.0		0.9989
ANTENNA	–	–	–	1.5x23+ GND PL	1.05	–
AIM MECHANISM	–	–	–	11x4.25x5.75	2.06	–
CENT STA TIMER	BATTERY		–	1.32x1.32x2.63	.036	–
HARNESS ASSY (INCLUDES PCB s CONNECTORS & SWITCHES)					2.92	–
TOTAL POWER AND WEIGHT			14.345 w		22.55	

*MEASURED POWER AT ROOM TEMPERATURE

** INCLUDES DIPLEXER FILTER

APR 69 5178.7.8

ALSEP COMMAND LINK

* ANTENNA
  * DIPLEXER
    * COMMAND RECEIVER
      * COMMAND DECODER

NOV 67 5178.7.9

COMMAND LINK CHARACTERISTICS

FUNCTION/PARAMETER	ALSEP	MSFN
1. FREQUENCY	2119 ± 0.001% MHz	2119 MHz
2. MODULATION	–	PM, ± 3 RADIANS
3. MODULATING SIGNAL	–	1 KHz SINE WAVE SYNC SIGNAL LINEARLY ADDED TO A 2 KHz SUBCARRIER
4. DATA RATE		1000 bps
5. IF BANDWIDTH (3 db)	275 ± 25 KHz	–
6. RECEIVER DYNAMIC RANGE	- 101 TO - 61 dbm	–
7. PERMISSIBLE Pe (PROBABILITY OF BIT ERROR)	10^{-9}	
8. REQUIRED PREDETECTION S/N FOR 10^{-9} BER	+ 12 db	
9. S/N MARGIN FOR Pe of 10^{-9} (30' ANTENNA)	NOMINAL +32 db WORST CASE +28 db	

NOV 67 5178.7.10

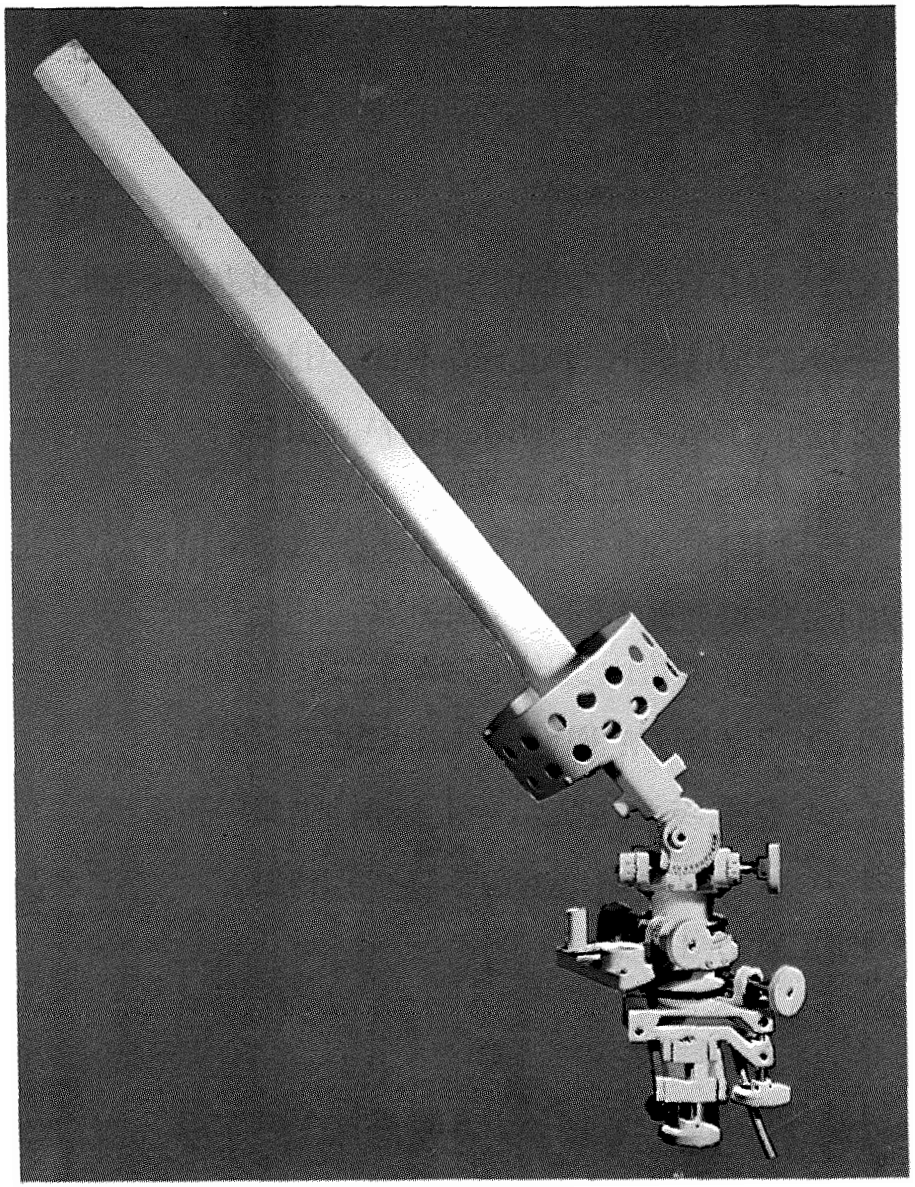

ANTENNA AND AIMING MECHANISM

JAN 68 5178.7.11

ANTENNA DESCRIPTION

* FLAT "RIBBON-LIKE" COPPER CONDUCTOR WRAPPED AROUND FIBERGLASS-EPOXY TUBE
* 1 1/2 INCHES IN DIAMETER AND 23 INCHES LONG
* USES 5" GROUND PLANE WITH A 2" CYLINDRICAL SKIRT
* IMPEDANCE MATCHING TRANSFORMER AT ANTENNA FEED POINT MATCHES THE ANTENNA IMPEDANCE TO A 50 OHM COAXIAL LINE
* DESIGNED FOR EASY ATTACHMENT TO THE POINTING MECHANISM WITH "QUICK-CONNECT" SPRING LOADED DETENTS
* COATED WITH WHITE REFLECTING THERMAL PAINT
* WEIGHT - 1.28 POUNDS INCLUDING CONNECTOR AND CABLE

ANTENNA CHARACTERISTICS

	TRANSMIT		RECEIVE	
	SPEC	MEAS	SPEC	MEAS
GAIN				
ON BORESIGHT	15.2 db	16.0 db	14.7 db	15.2 db
BEAMWIDTH AT 11.0 db GAIN			27°	36°
BEAMWIDTH AT 11.5 db GAIN	27°	33°		
AXIAL RATIO	3 db	1.3 db	3 db	1.0 db
INPUT VSWR	1.25 : 1	1.20 : 1	1.5 : 1	1.20 : 1
SIDELOBE LEVEL	-10 db	-11 db	-10 db	11.3 db
WEIGHT (ACTUAL)	1.28 LBs (including cable)			

SEPT 68 5178.7.13

ANTENNA TEST

1. ANTENNA PATTERN THRU ANT CENTERLINE AND FEED TERM (NOT SHOWN)
2. ANTENNA PATTERN THRU ANT CENTERLINE AND 90° TO TERM (SHOWN BELOW)

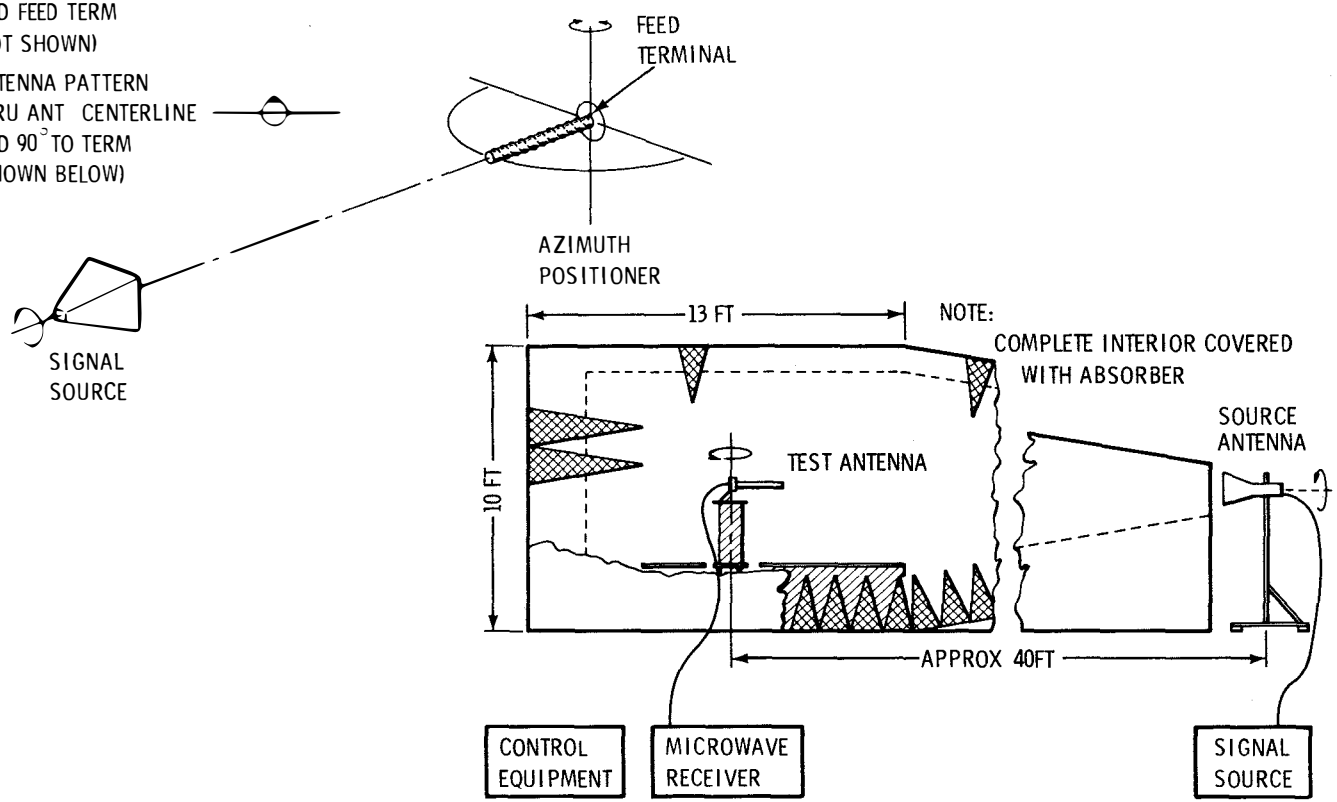

NOV 67 5178.7.14

ANTENNA PATTERN (DOWNLINK)

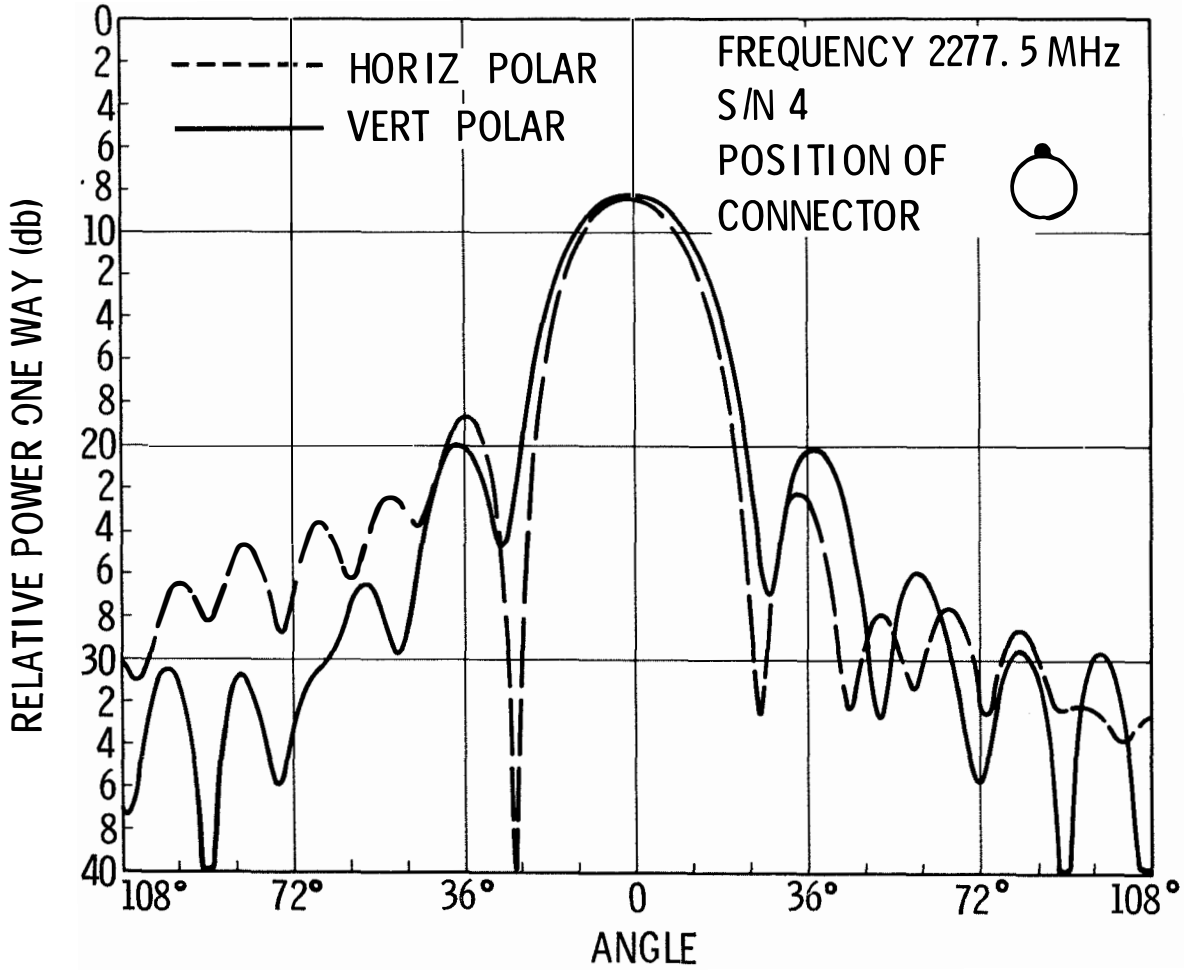

SEPT 68 5178.7.15

ANTENNA PATTERN (UPLINK)

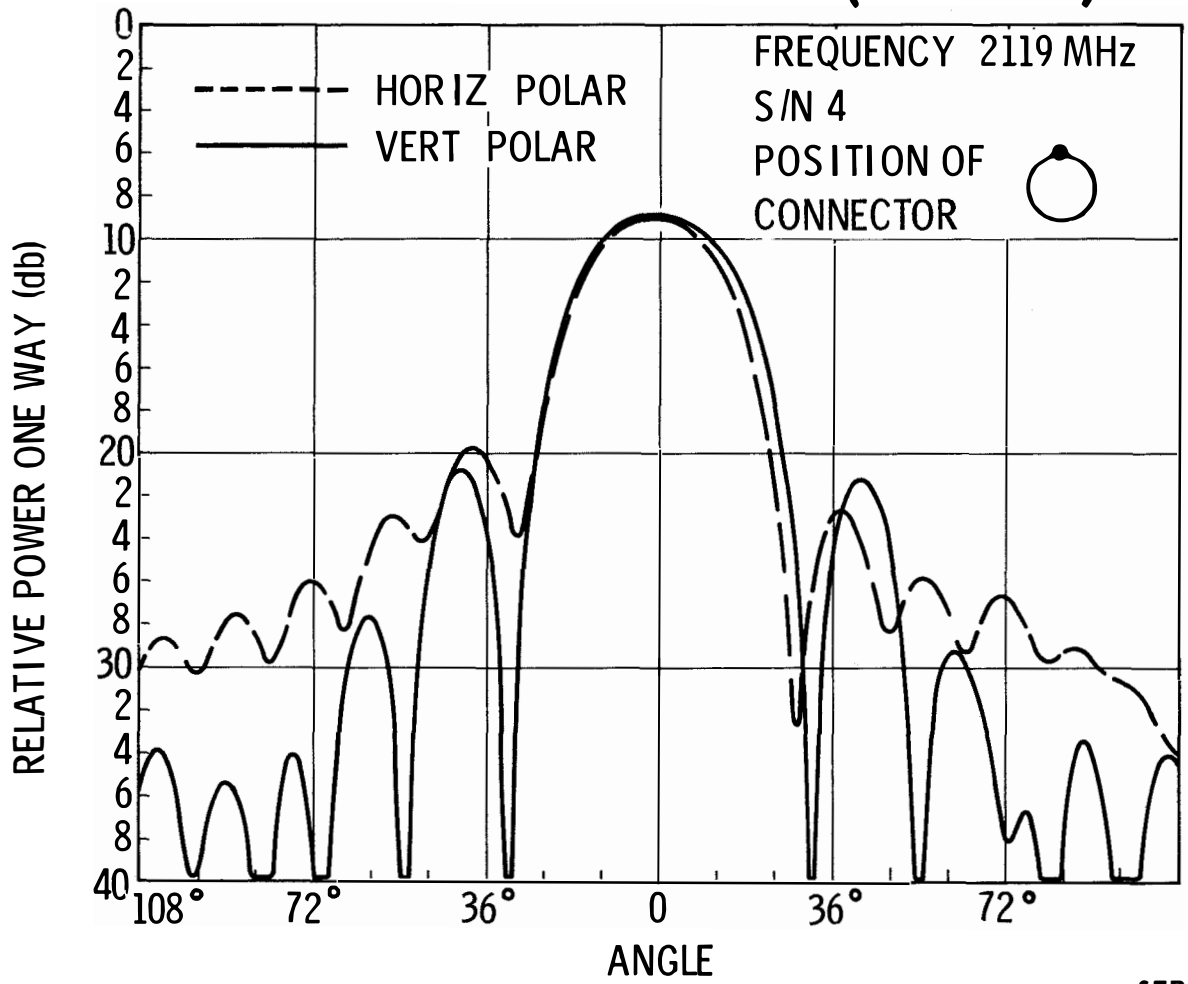

SEPT 68 5178.7.16

DIPLEXER FILTER

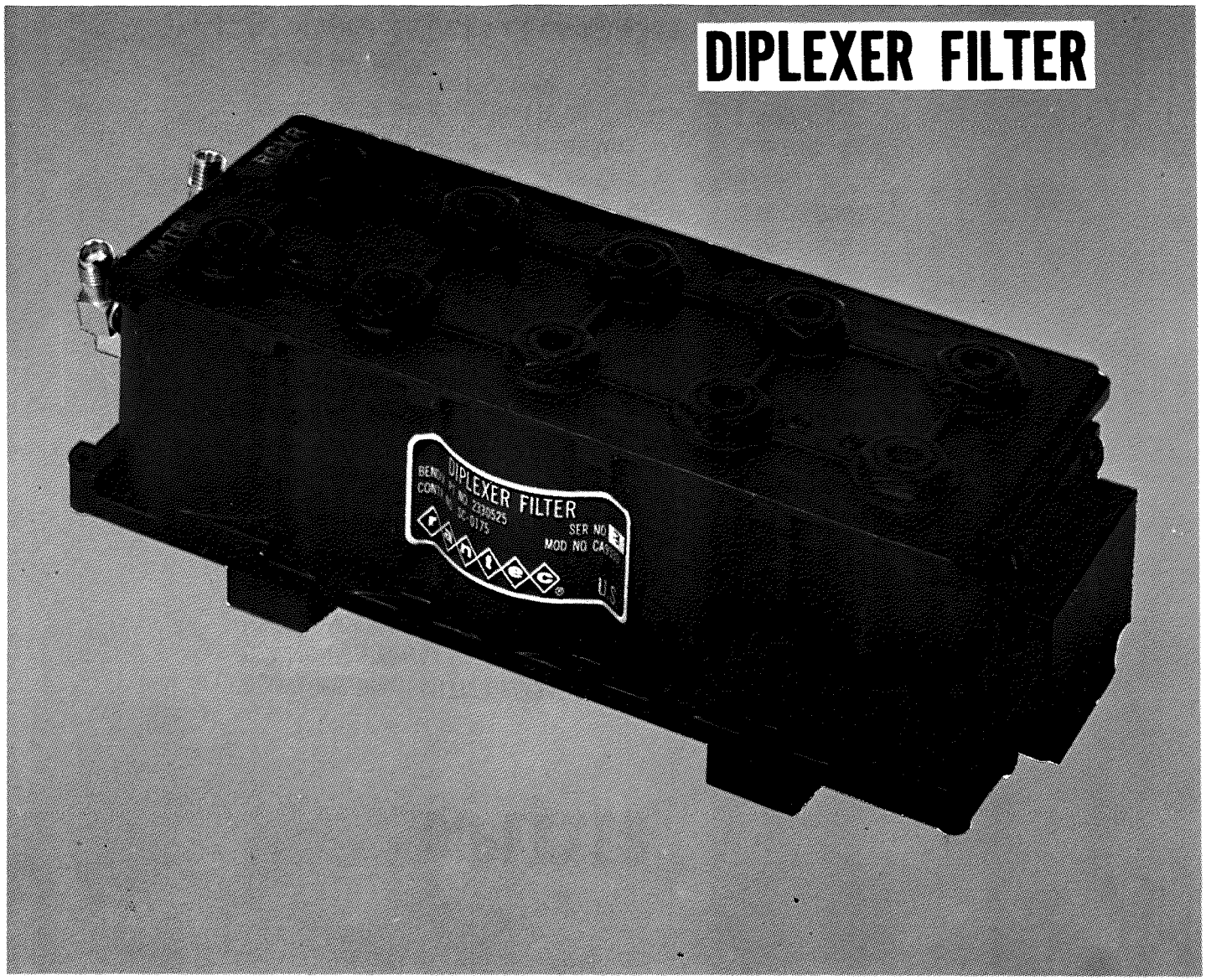

JAN 68 5178.7.17

DIPLEXER

* PROVIDES TRANSMITTER/RECEIVER ISOLATION WITH A COMMON ANTENNA
* USES TUNEABLE CAVITY BANDPASS FILTERS - 5 IN TRANSMIT AND 5 IN RECEIVE PATH
* CHARACTERISTICS

RECEIVER PATH	MEAS	SPEC
INSERTION LOSS	1.30 db	2.5 db
VSWR	1.10:1	1.36:1
CENTER FREQUENCY:	2119	2118-2120 MHz
MAX 3 db BANDWIDTH	11.0 MHz	24 MHz
MIN 3 db BANDWIDTH	11.0 MHz	2.18 MHz
TRANSMITTER PATH		
INSERTION LOSS:	0.70 db	0.8 db
VSWR	1.10:1	1.36:1
CENTER FREQUENCY	2275-2280 MHz	2275-2280 MHz
MAX 3 db BANDWIDTH	45 MHz	60 MHz
MIN 3 db BANDWIDTH	45 MHz	5.35 MHz
POWER HANDLING CAPABILITY	20.0 WATTS	1.5 WATTS

* MISCELLANEOUS
  DIMENSIONS - 2.5 x 2.5 x 6.88 INCHES
  WEIGHT - 0.9 POUNDS

DIPLEXER FILTER
MINIMUM REJECTION REQUIREMENTS

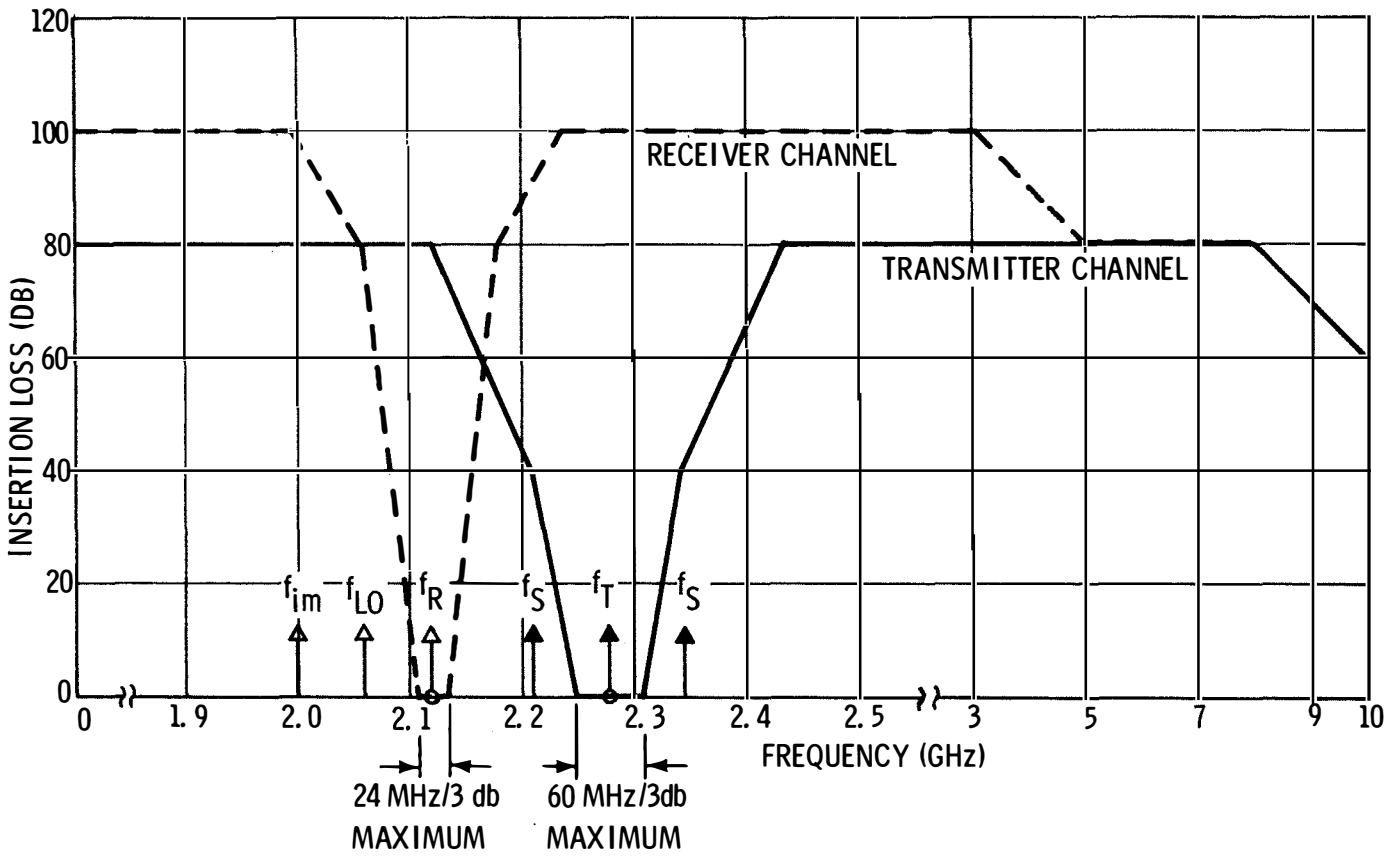

NOV 67 5178.7.19

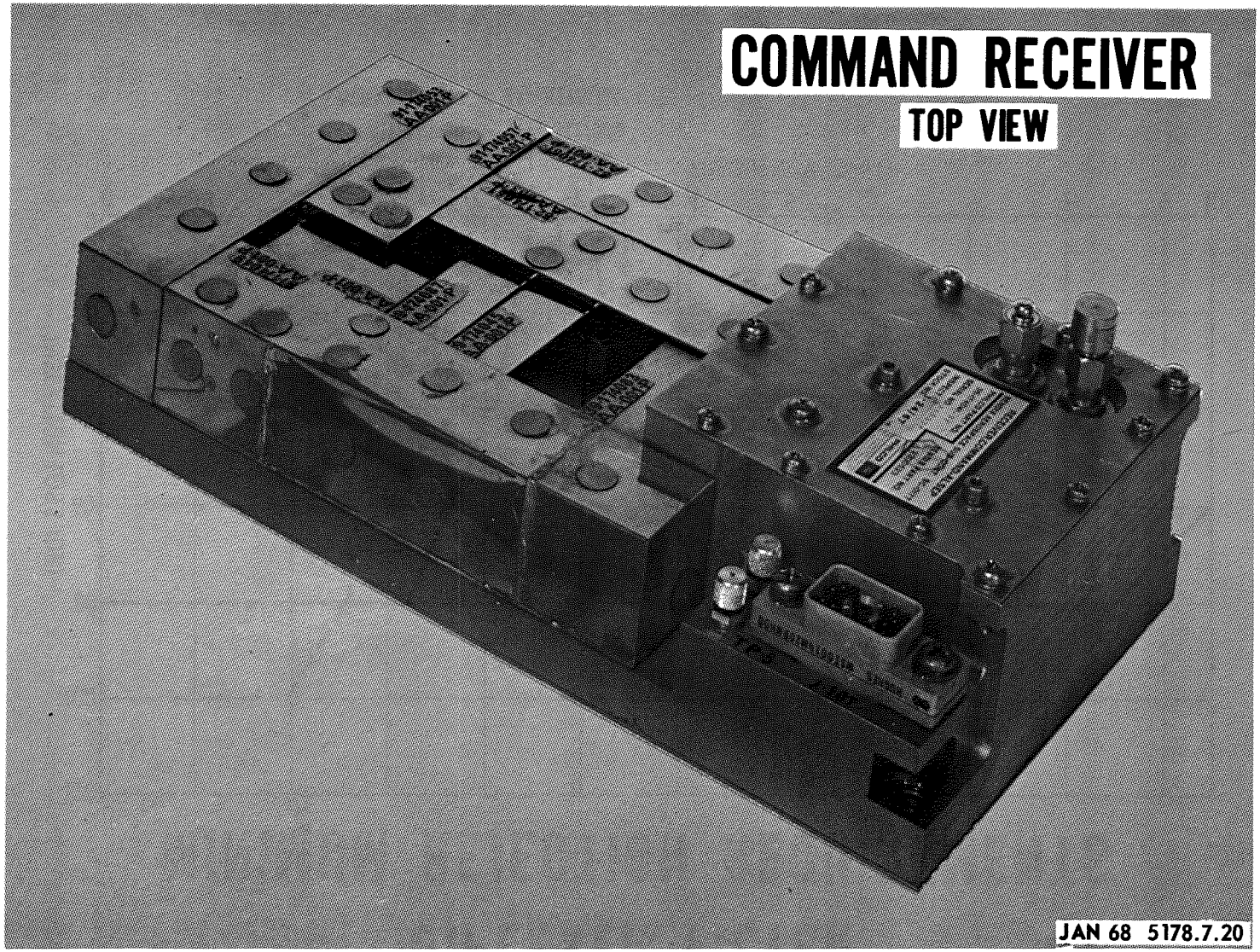
COMMAND RECEIVER
TOP VIEW
JAN 68 5178.7.20

COMMAND RECEIVER

BOTTOM VIEW

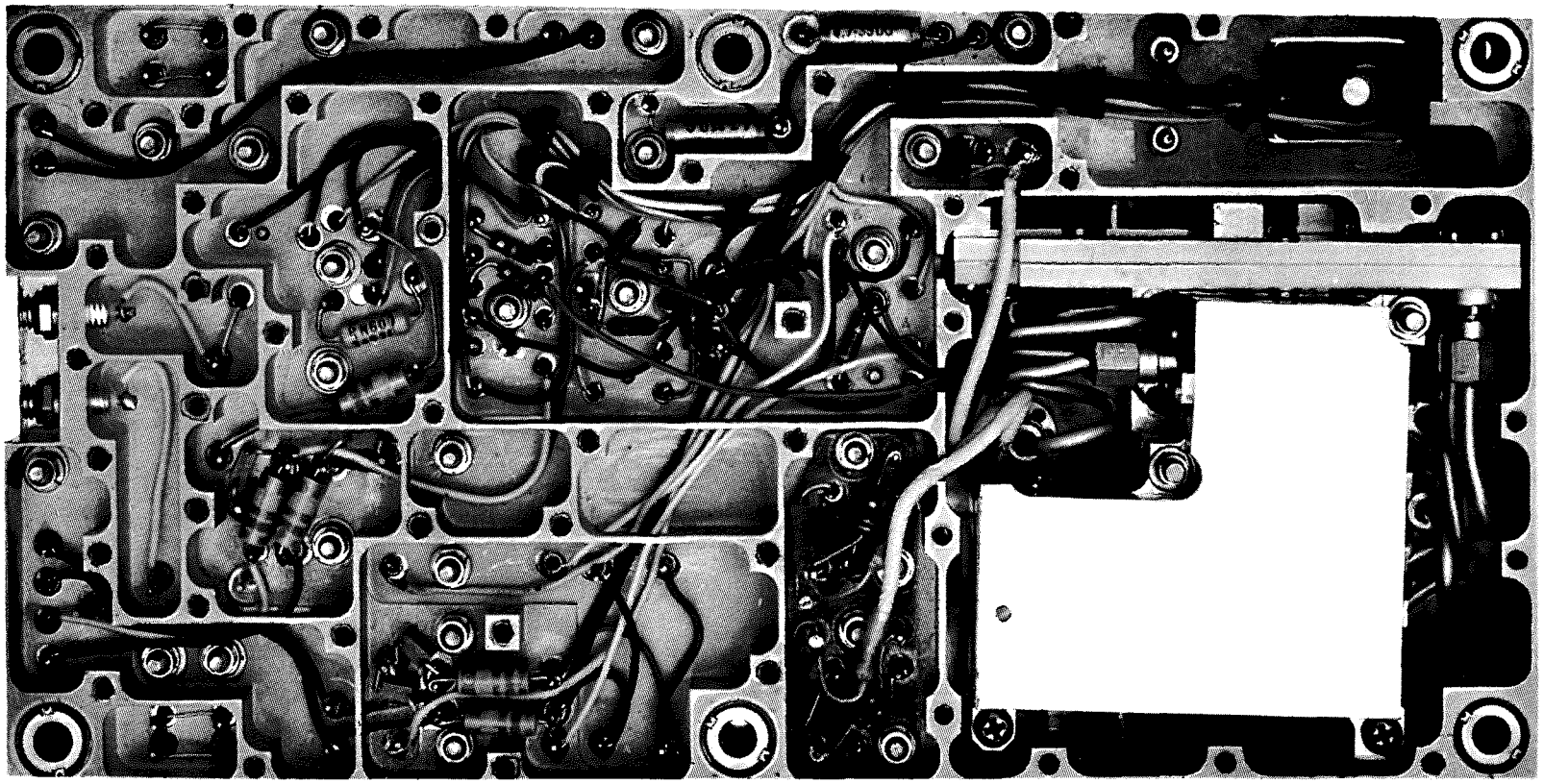

JAN 68 5178.7.21

COMMAND RECEIVER

* RECEIVES SIGNALS FROM THE MSFN STATIONS ON A FREQUENCY OF 2119 MHz.
* LOW SIDE LOCAL OSCILLATOR INJECTION PROVIDED BY STANDBY REDUNDANT LOCAL OSCILLATORS.
* SYNCHRONOUS TUNED IF AMPLIFIERS PROVIDE AMPLIFICATION, FILTERING AND 40db LIMITING PRIOR TO SIGNAL DEMODULATION.
* FM DISCRIMINATOR AND INTEGRATOR GIVES COMBINED 1 and 2 KHz OUTPUT.
* OUTPUT LEVEL IS 0.8 VOLTS/RADIAN FOR AN INPUT DEVIATION OF 3.0 RADIANS.
* EMPLOYS MODULAR CONSTRUCTION ON A "MILLED" MAGNESIUM BASE PLATE.
* SIZE - 8 x 4 x 1.75 INCHES
  WEIGHT - 1.84 POUNDS
* POWER - 665 MILLIWATS (NOMINAL) AT + 12 vdc
  30 MILLIWATTS (NOMINAL) AT - 6 vdc

APR 69 5178.7.22

COMMAND RECEIVER
SIMPLIFIED BLOCK DIAGRAM

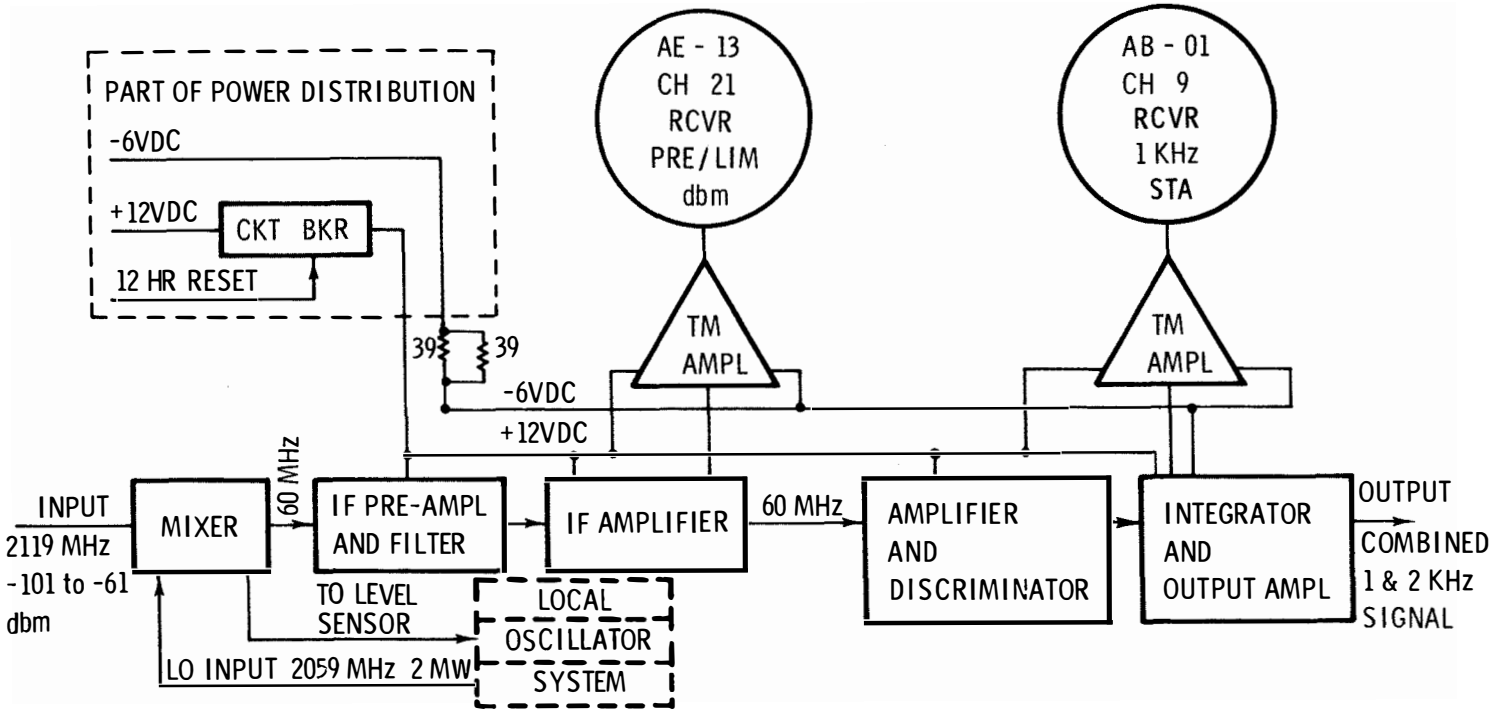

SEPT 68 5178.7.23

COMMAND RECEIVER
LOCAL OSCILLATOR BLOCK DIAGRAM

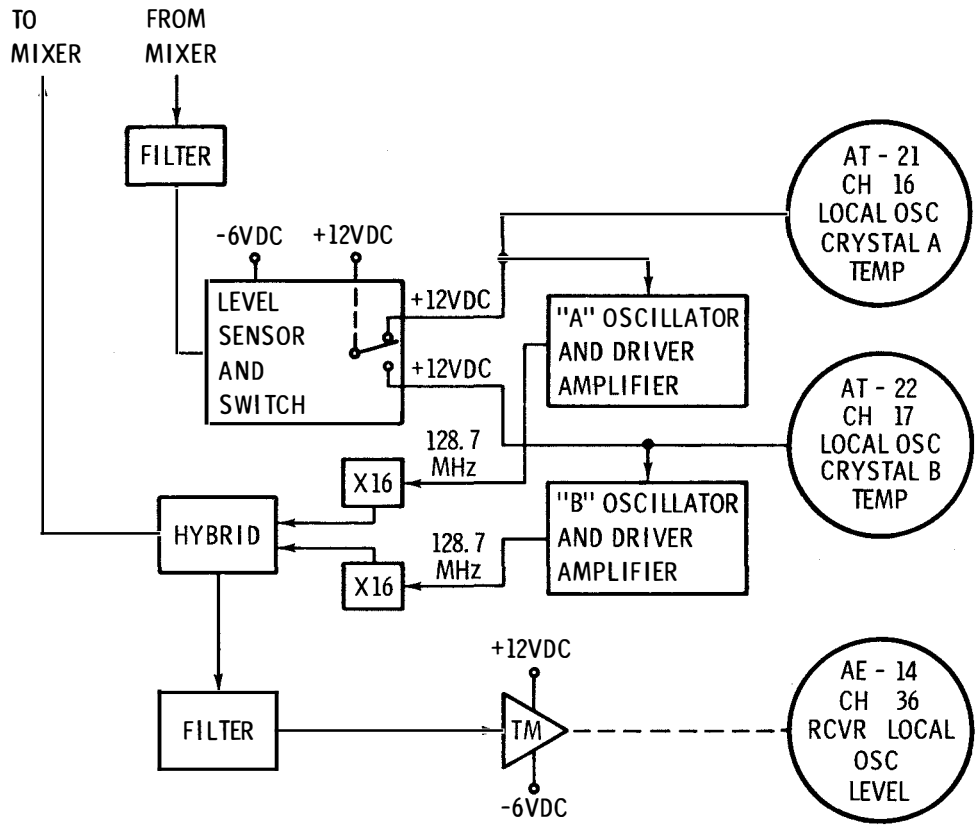

SEPT 68 5178.7.24

COMMAND RECEIVER TELEMETRY SUMMARY

CHANNEL 36	AE-14	RCVR LOCAL OSC LEVEL * DETECTOR CIRCUIT SAMPLES OSCILLATOR SIGNAL. DETECTED SIGNAL IS THEN AMPLIFIED TO PROPER TM LEVEL
CHANNEL 16	AT-21	LOCAL OSC CRYSTAL A TEMP * USES THERMISTOR/RESISTOR NETWORK POWERED BY 12 VDC. * THERMISTOR IS CEMENTED (EPOXY) TO CRYSTAL CAN.
CHANNEL 17	AT-22	LOCAL OSC CRYSTAL B TEMP * USES THERMISTOR/RESISTOR NETWORK POWERED BY 12 VDC. * THERMISTOR IS CEMENTED (EPOXY) TO CRYSTAL CAN.
CHANNEL 9	AB-01	CMD DEMOD 1KHz PRESENT * SIGNAL IS OBTAINED FROM RECEIVER'S AUDIO OUTPUT. * USES 1KHz BANDPASS AMPLIFIER AND DIODE DETECTOR.
CHANNEL 21	AE - 13	RCVR PRE-LIMITING LEVEL * DIODES IN FINAL STAGE OF IF PROVIDE HARD LIMITING. * TM SIGNAL PROVIDED BY THE LIMITING DIODE CURRENT.

SEPT 68 5178.7.25

COMMAND RECEIVER SPECIFICATIONS

* INPUT FREQUENCY	2119 MHz ± 0.001 %
* INPUT SIGNAL LEVEL	-101dbm to -61dbm
* NOISE FIGURE	10db MAXIMUM
* LOCAL OSC FREQUENCY	2059 MHz ± 0.0025%/YR
* INTERMEDIATE FREQUENCY	60 MHz
* IF 3db BANDWIDTH	250 to 350 KHz WITH AN INPUT SIGNAL LEVEL OF -100dbm
* IF REJECTION	60db MINIMUM AT 3.4 MHz

* AUDIO OUTPUT SIGNAL
  (a) LEVEL - 0.8 VOLT/RADIAN (UP TO ± 3.0 RADIANS)
  (b) FREQ - 100 Hz TO 5 KHz

* POWER
  + 12 VDC AT 55 MILLIAMPERES (NOMINAL) - SUPPLIED THROUGH A CIRCUIT BREAKER RATED AT 150 MILLIAMPERES (NOMINAL). CIRCUIT IS AUTOMATICALLY GIVEN A RESET COMMAND EVERY 12 HOURS.

  - 6 VDC AT 55 MILLIAMPERES (NOMINAL) - SYSTEM PROTECTION PROVIDED BY SERIES RESISTOR.

* CONNECTORS - RF - COAXIAL OSM 210-2
  - OTHER - HUGHES WST0014M20BNH00

SEPT 68 5178.7.26

COMMAND DECODER

JAN 68 5178.7.27

COMMAND DECODER PHYSICAL DESCRIPTION

*SIZE - 2.8 x 3.94 x 6.25 INCHES

* POWER - 1330 MILLIWATTS (NOMINAL AT ROOM AMBIENT)

* WEIGHT - 2.70 POUNDS

* PARTS COUNT - 352 FLATPACKS
  26 TRANSISTORS
  83 RESISTORS
  28 CAPACITORS
  13 DIODES

* PARTS MOUNTED ON 10 PRINTED CIRCUIT BOARDS WITH FROM 2 to 12 LAYERS

* CONNECTOR - HUGHES - 244 PIN

COMMAND DECODER SIMPLIFIED BLOCK DIAGRAM

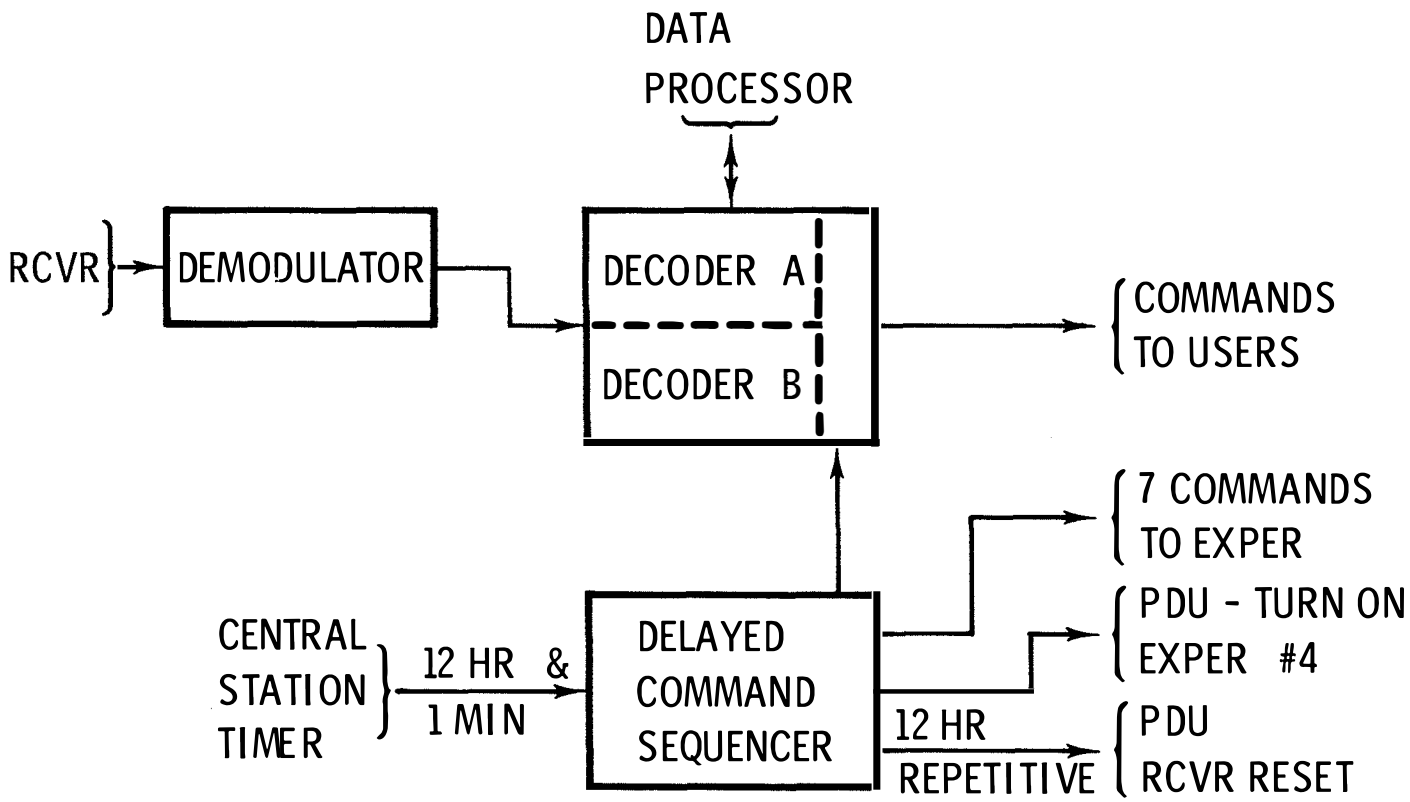

SEPT 68 5178.7.29

COMMAND DECODER

* CONTAINS A DEMODULATOR
  - TO GENERATE AN NRZ-C BIT STREAM FROM THE PHASE MODULATED COMPOSITE 1 & 2 KHz AUDIO INPUT
  - WHICH DETECTS " THRESHOLD" TO START DECODER "SEARCH MODE".
  - TO GENERATE 1, 2 AND 4 KHz TIMING CLOCKS WHICH ARE SYNCHRONIZED WITH THE 1KHz SYNC SUBCARRIER RECEIVED FROM THE MSFN.
* ACCEPTS COMMAND SIGNALS FROM THE MSFN NETWORK AND PROVIDES UP TO 100 UNIQUE COMMANDS TO USERS.
* A COMMAND FROM THE MSFN CONSISTS OF A 2KHz SUBCARRIER PHASE MODULATED WITH A 1KHz SUBCARRIER TO PRODUCE 61 SERIAL BITS WITH THE FOLLOWING FORMAT.

20 BITS	7 BITS	7 BITS	7 BITS	20 BITS
1	2	3	4	5

1. - PREAMBLE - ALL ONES OR ALL ZEROS
2. - ADDRESS INDIVIDUAL ALSEP (A or B DECODER)
3. - COMMAND COMPLEMENT
4. - COMMAND
5. - TIMING (EXECUTION) - ALL ONES OR ALL ZEROS

COMMAND DECODER ADDRESSING

* THE SEVEN ADDRESS BITS ARE USED TO UNIQUELY COMMAND FOUR SEPARATE ALSEPs DEPLOYED ON THE LUNAR SURFACE.
* EACH COMMAND DECODER HAS AN "A" SECTION AND A REDUNDANT "B" SECTION. EITHER MAY BE SELECTED TO PROCESS A COMMAND BY TRANSMITTING THE PROPER ADDRESS CODE.
* CODES

ALSEP	ADDRESS NO. (OCTAL)	CODE PATTERN	COMMAND DECODER NUMBER
1	130	1011000	1A
	30	0011000	1B
2	116	1001110	2A
	16	0001110	2B
3	151	1101001	3A
	51	0101001	3B
4	25	0010101	4A
	65	0110101	4B

NOV 67 5178.7.31

COMMAND DEMODULATOR

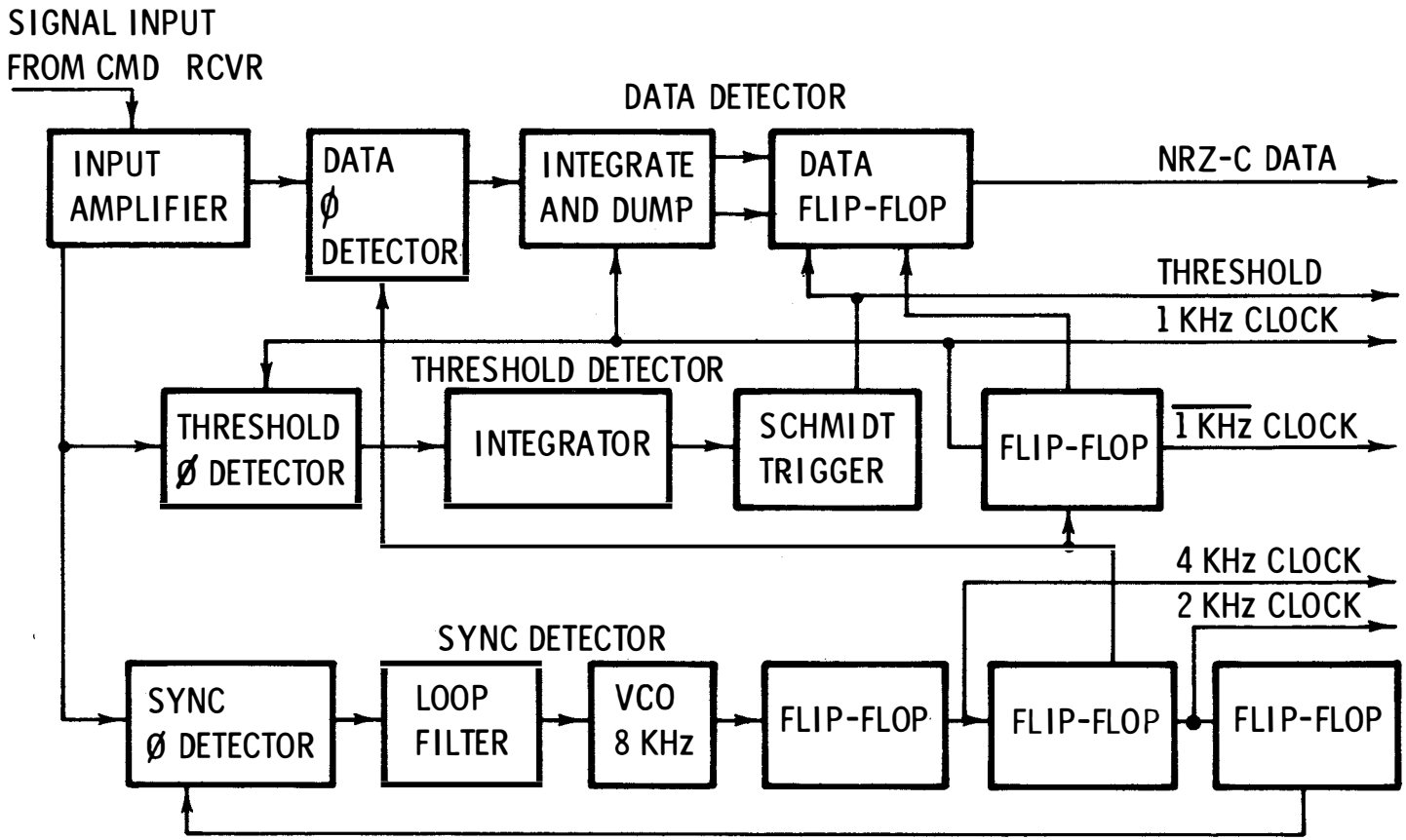

SEPT 68 5178.7.32

COMMAND DECODER SECTION BLOCK DIAGRAM-DIGITAL

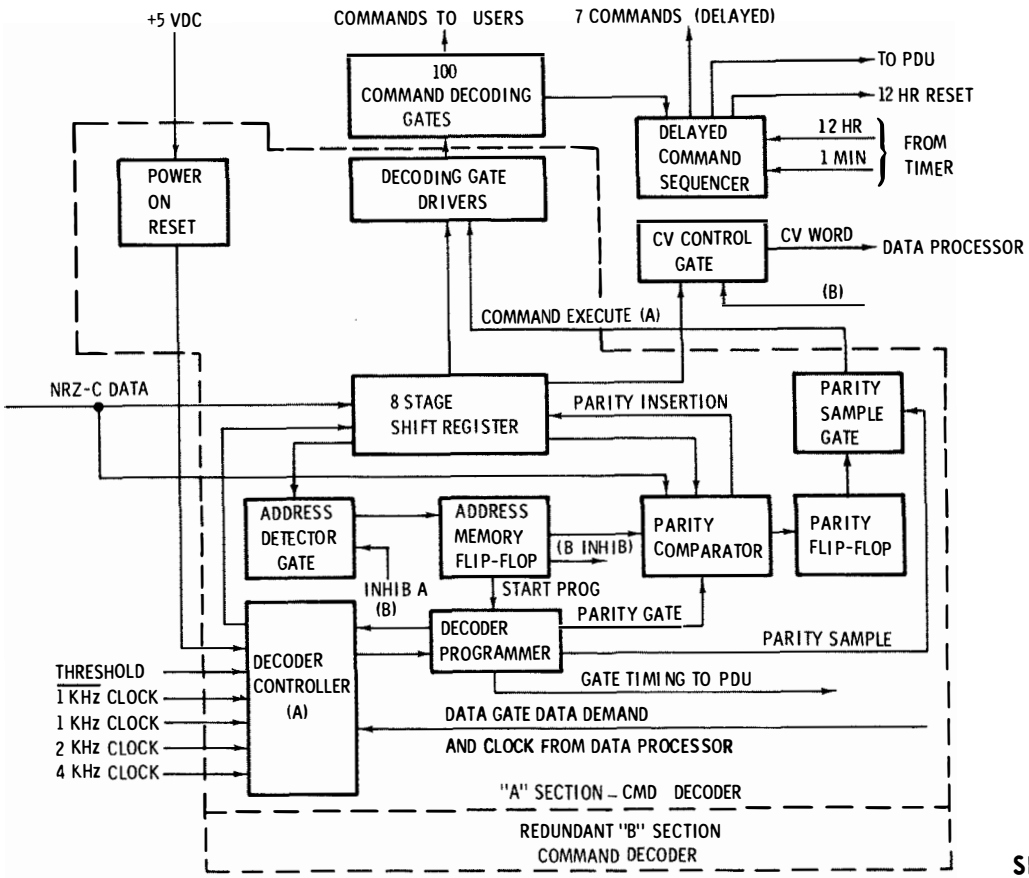

SEPT 68 5178.7.33

FUNCTIONAL FLOW CHART COMMAND DECODER

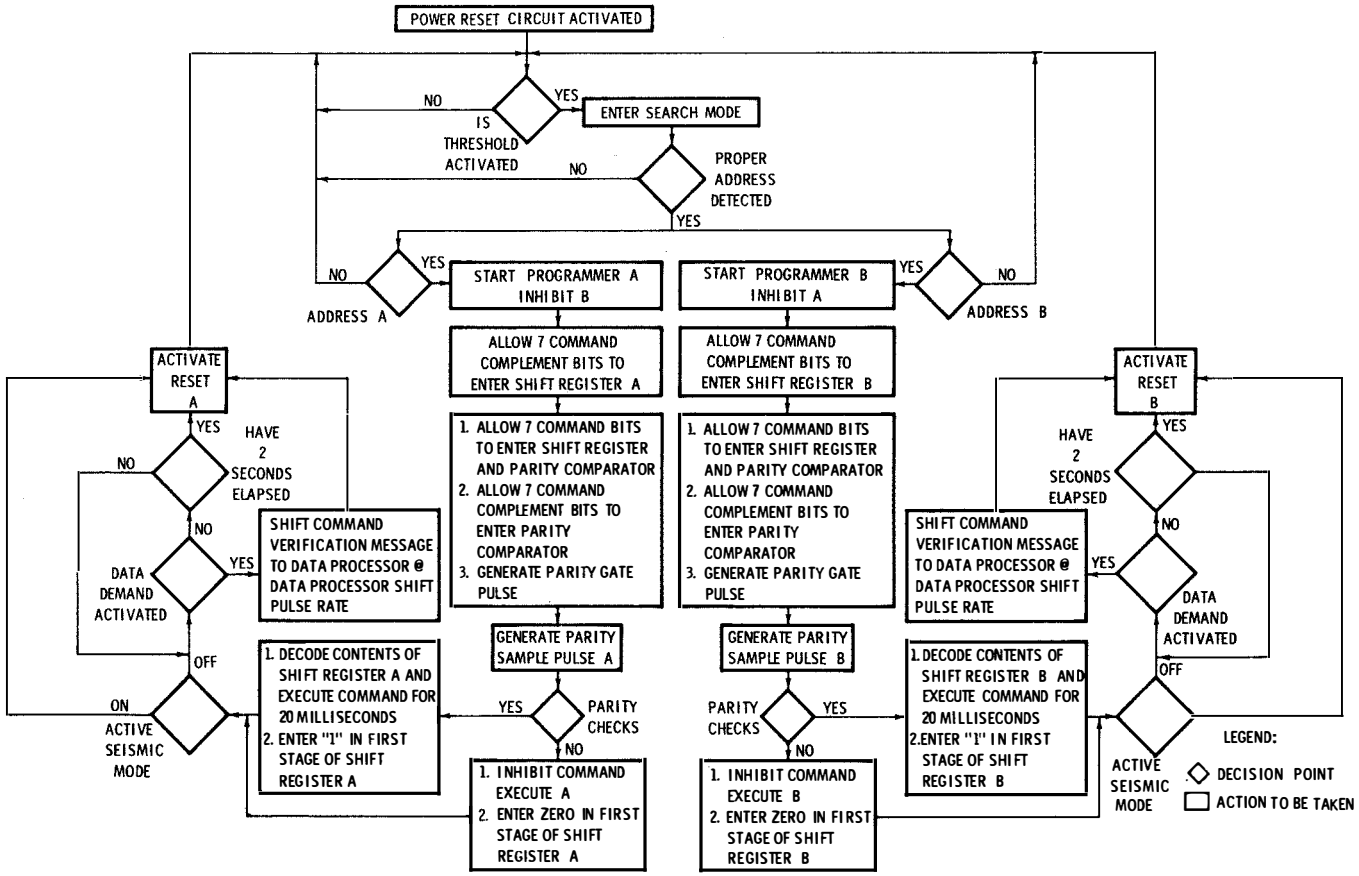

DEC 67 5178.7.34

COMMAND DECODER DELAYED COMMAND SEQUENCER

* PROVIDES A BACKUP FEATURE FOR LOCAL GENERATION OF COMMANDS IN CASE THE COMMAND LINK CANNOT BE ESTABLISHED
* GENERATES 7 ONE-TIME COMMANDS AFTER A DELAY OF 96 (PLUS) HOURS FROM START OF "PET" (WHERE "PET" STARTS AT THE TIME THE ASTRONAUT MATES THE RTG WITH THE CENTRAL STATION BY INSERTING P22 INTO J22)
* COMMANDS ARE IDENTICAL TO THOSE GENERATED IN RESPONSE TO SIGNALS FROM THE MSFN AND ARE OR'ED IN THE COMMAND LINE DRIVER.
* DELAYED (ONE-TIME) COMMANDS ARE IDENTIFIED AS FOLLOWS:

FUNCTION	TIME OF EXECUTION	COMMAND NUMBER (OCTAL)
REMOVE CPLEE DUST COVER	96 HRS & 2 MIN	113
SET CCIG SEAL BREAK	96 HRS & 2 MIN	105
UNCAGE PSE	96 HRS & 2 MIN	073
EXECUTE CCIG SEAL BREAK	96 HRS & 3 MIN	110
SWS DUST COVER REMOVAL	96 HRS & 4 MIN	122
SET SIDE DUST COVER	96 HRS & 4 MIN	107
EXECUTE SIDE DUST COVER REMOVAL	96 HRS & 5 MIN	110

DELAYED COMMAND SEQUENCER FUNCTIONAL FLOW CHART

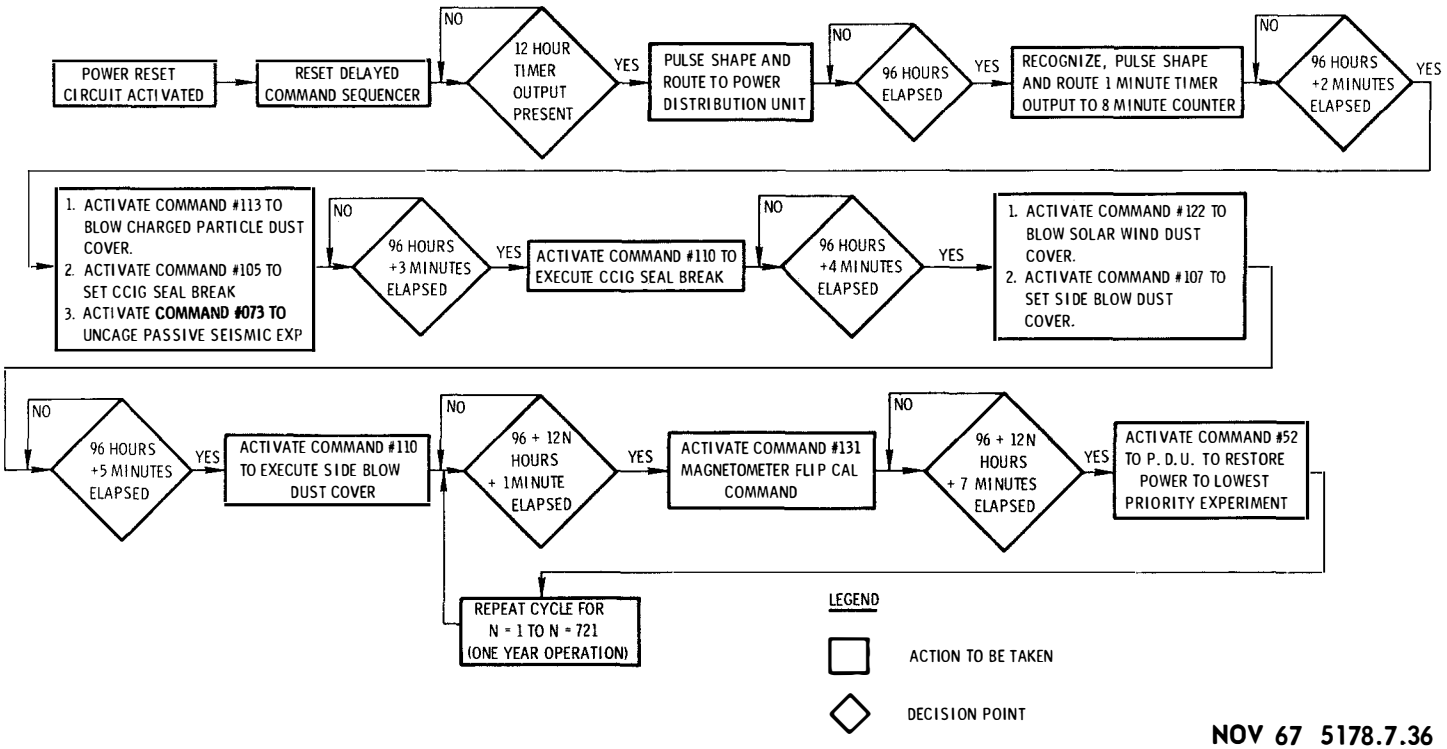

NOV 67 5178.7.36

COMMAND DECODER POWER RESET

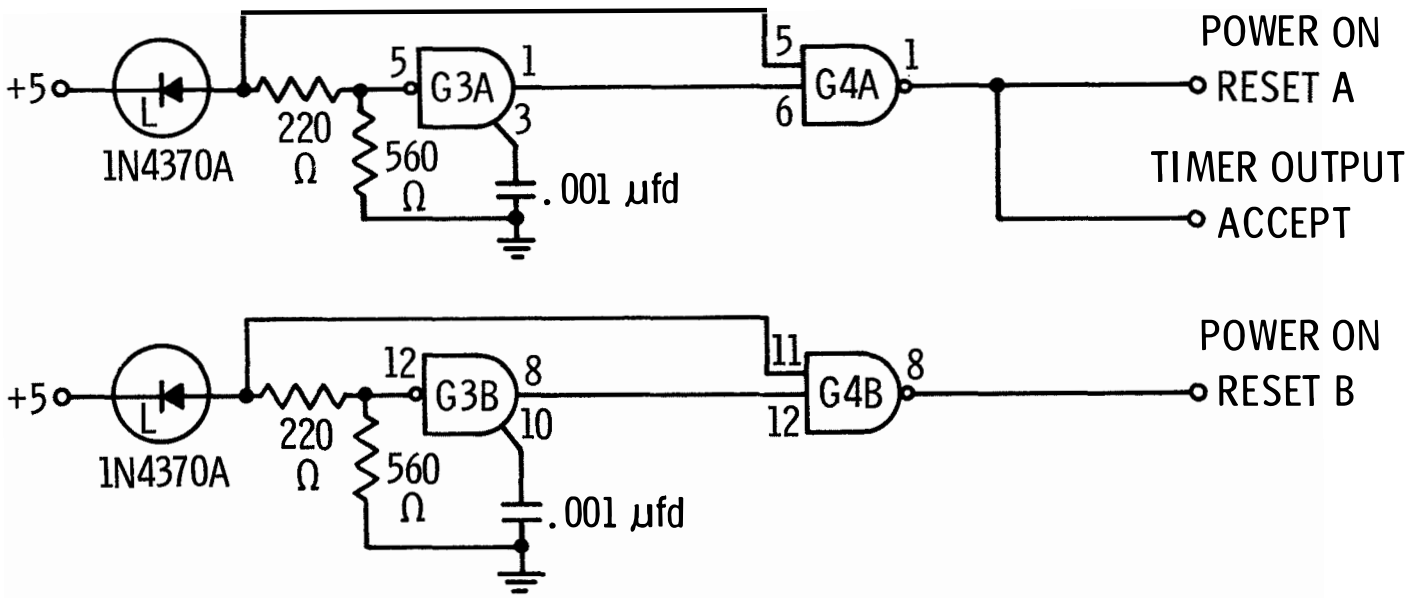

FEATURES

DETECTS INITIAL POWER TURN-ON OR MOMENTARY POWER INTERRUPTION TO -

1. SET COMMAND DECODER IN SEARCH MODE
2. SET COMMAND DECODER IN "TIMER ACCEPT" MODE
3. START DELAYED COMMAND SEQUENCER

NOV 67 5178.7.37

COMMAND DECODER-OTHER LOCAL COMMANDS

THE FOLLOWING REPETITIVE COMMANDS ARE GENERATED WITHIN THE COMMAND DECODER:

1 - PSE CALIBRATE - COMMAND #065
   * OCCURS 12 HOURS AFTER T_0 AND EVERY 12 HOURS THEREAFTER

2 - RECEIVER CIRCUIT BREAKER RESET
   * OCCURS 12 HOURS AFTER T_0 AND EVERY 12 HOURS THEREAFTER

3 - MAGNETOMETER FLIP-CALIBRATE - COMMAND #131
   * FIRST OCCURRENCE IS 108 HOURS PLUS 1 MIN AFTER T_0 - REPEATS EVERY 12 HOURS THEREAFTER

4 - RESTORE POWER TO LOW PRIORITY EXPERIMENT - CMD #052
   * FIRST OCCURRENCE IS 108 HOURS AND 7 MINUTES AFTER T_0 AND EVERY 12 HOURS THEREAFTER

* ALL ABOVE COMMANDS MAY BE INHIBITED BY TRANSMITTING COMMAND #033

➤ COMMAND #033 IS CONSIDERED CRITICAL! SHOULD THE COMMAND LINK BE LOST FOLLOWING TRANSMISSION OF CMD #033, THEN ALL LOCALLY GENERATED COMMANDS WOULD BE LOST

SEPT 68 5178.7.38

TIMER/COMMAND DECODER INTERFACE

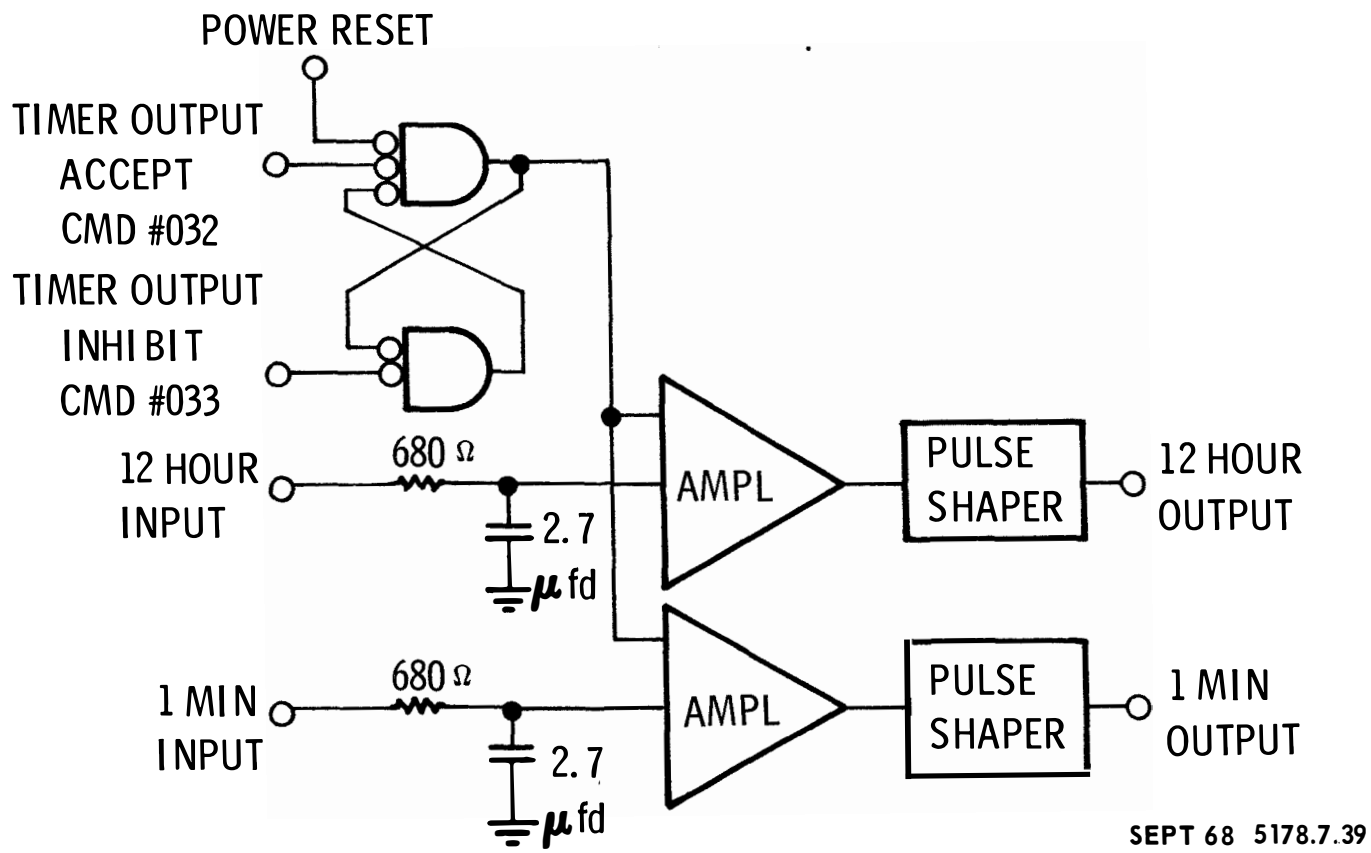

SEPT 68 5178.7.39

COMMAND DECODER INTERFACE

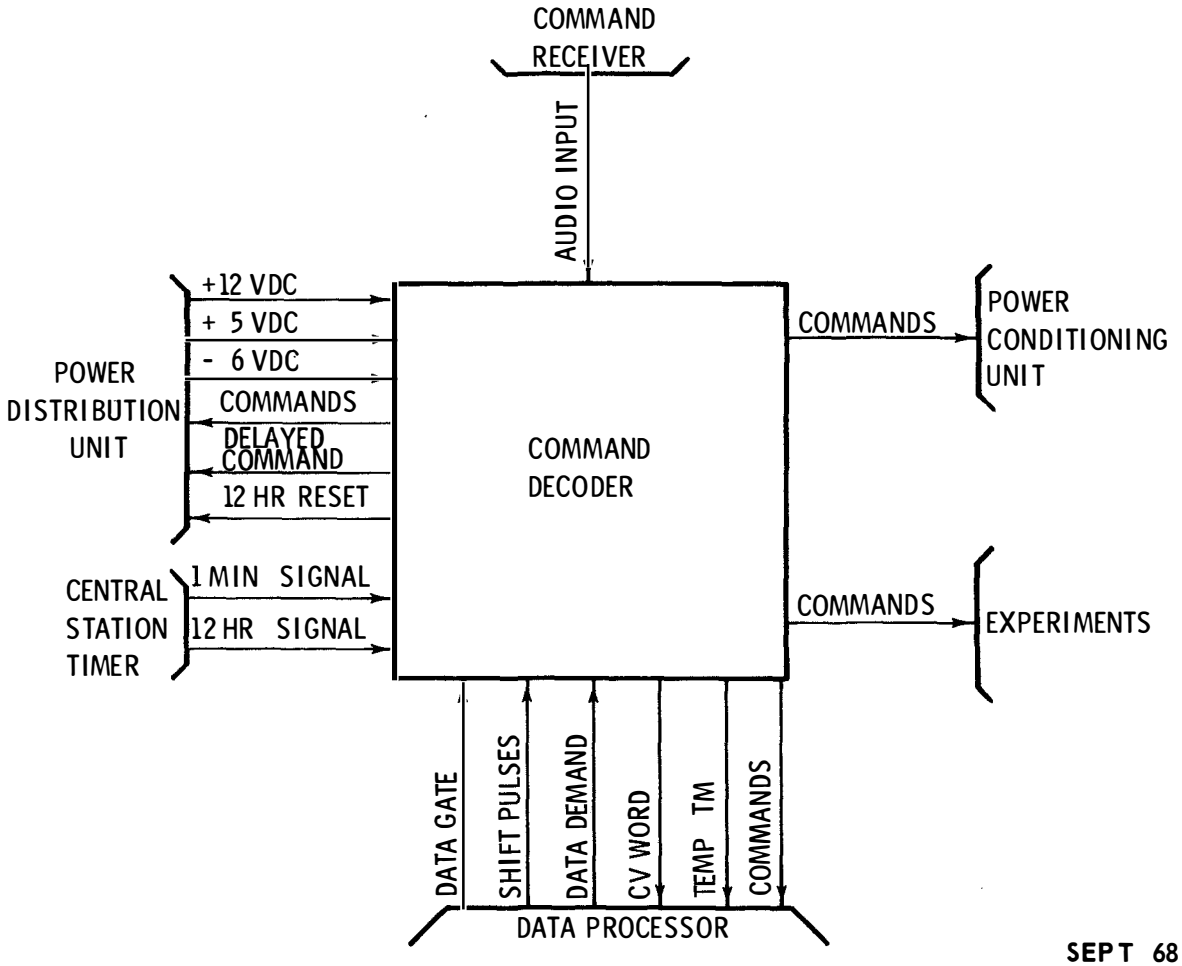

SEPT 68 5178.7.40

COMMAND DECODER INTERFACE CIRCUIT

(ONE EACH FOR 100 COMMANDS)

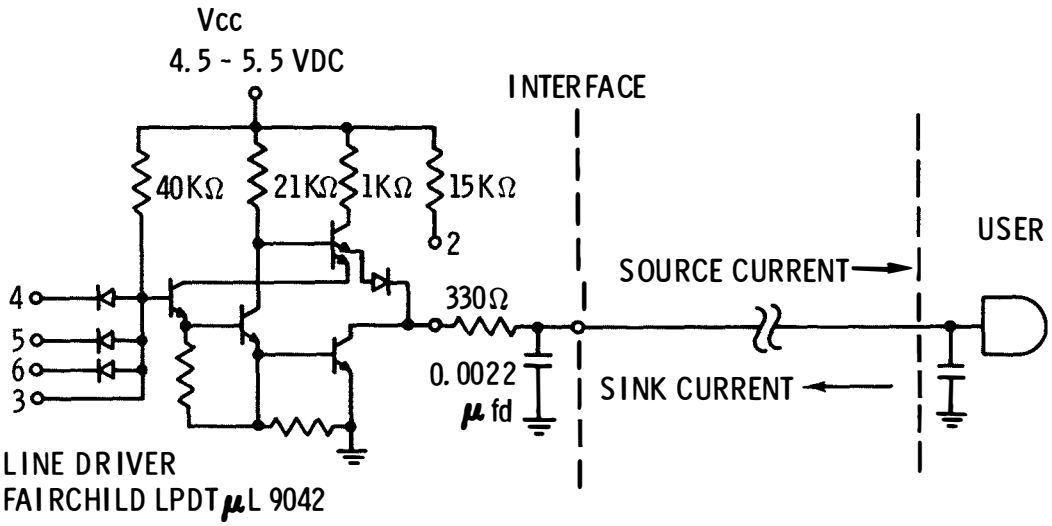

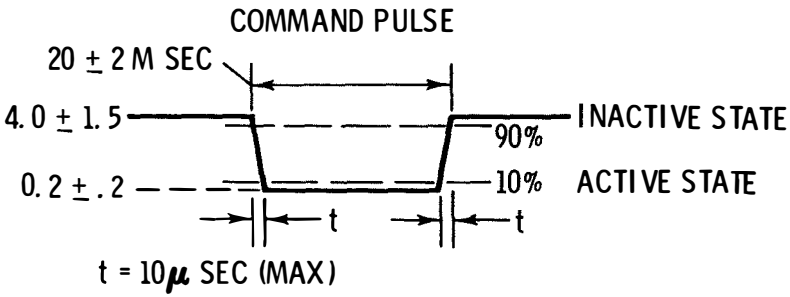

DRIVER SPECIFICATION

SOURCE I ≤ 45μ AMP
(INACTIVE STATE)

SINK I ≤ 750μ AMP
(ACTIVE STATE)

SEPT 68 5178.7.41

COMMAND DECODER TELEMETRY SUMMARY

* COMMAND VERIFICATION (CV) WORD
  - LOCATED IN WORD 46 OF TELEMETRY FORMAT FOR FLIGHT SYSTEMS 1 & 2 AND IN WORD 5 FOR FLIGHT SYSTEMS 3 & 4
  - CONSISTS OF 2 ZEROS, THE RECEIVED COMMAND AND A PARITY BIT
  - EXAMPLE OF CV WORD RECEIVED AT THE MSFN

0	0	0	0	1	1	1	1	0	1
FILLER BITS		COMMAND (OCTAL 36)							PARITY

ONCE FOR EACH CMD TRANSMITTED

  - PARITY " ONE" VERIFIES BIT BY BIT CHECK OF COMMAND WITH COMPLEMENT.
  - THE SEVEN COMMAND BITS IDENTIFY THE BINARY CODE DETECTED BY THE COMMAND DECODER.

COMMAND DECODER TELEMETRY SUMMARY

CHANNEL 48 AT-31 COMMAND DECODER BASE TEMP

*SIGNAL OBTAINED FROM THERMISTOR LOCATED NEAR CENTER OF BASE PLATE

CHANNEL 49 AT-32 COMMAND DECODER INTERNAL TEMP

*THERMISTOR LOCATED ON "PULSE SHAPER" PRINTED CIRCUIT BOARD

CHANNEL 61 AT-33 COMMAND DEMODULATOR, VCO TEMP

*THERMISTOR LOCATED ON DEMODULATOR PRINTED CIRCUIT BOARD

CIRCUITS - TEMPERATURE SENSING CIRCUITS ARE ARRANGED AS FOLLOWS:

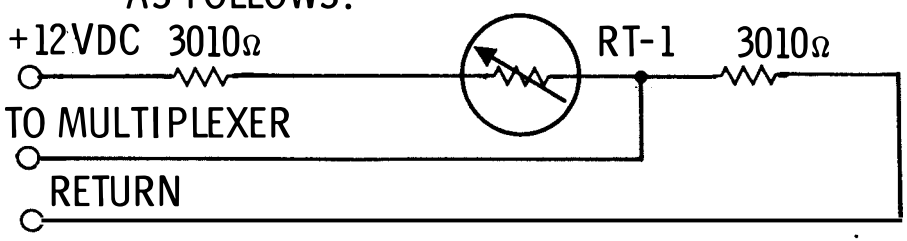

RT-1 "FENWAL" ISO-CURVE 15K ohm THERMISTOR.

SEPT 68 5178.7.43

TELEMETRY READOUT VS. TEMPERATURE

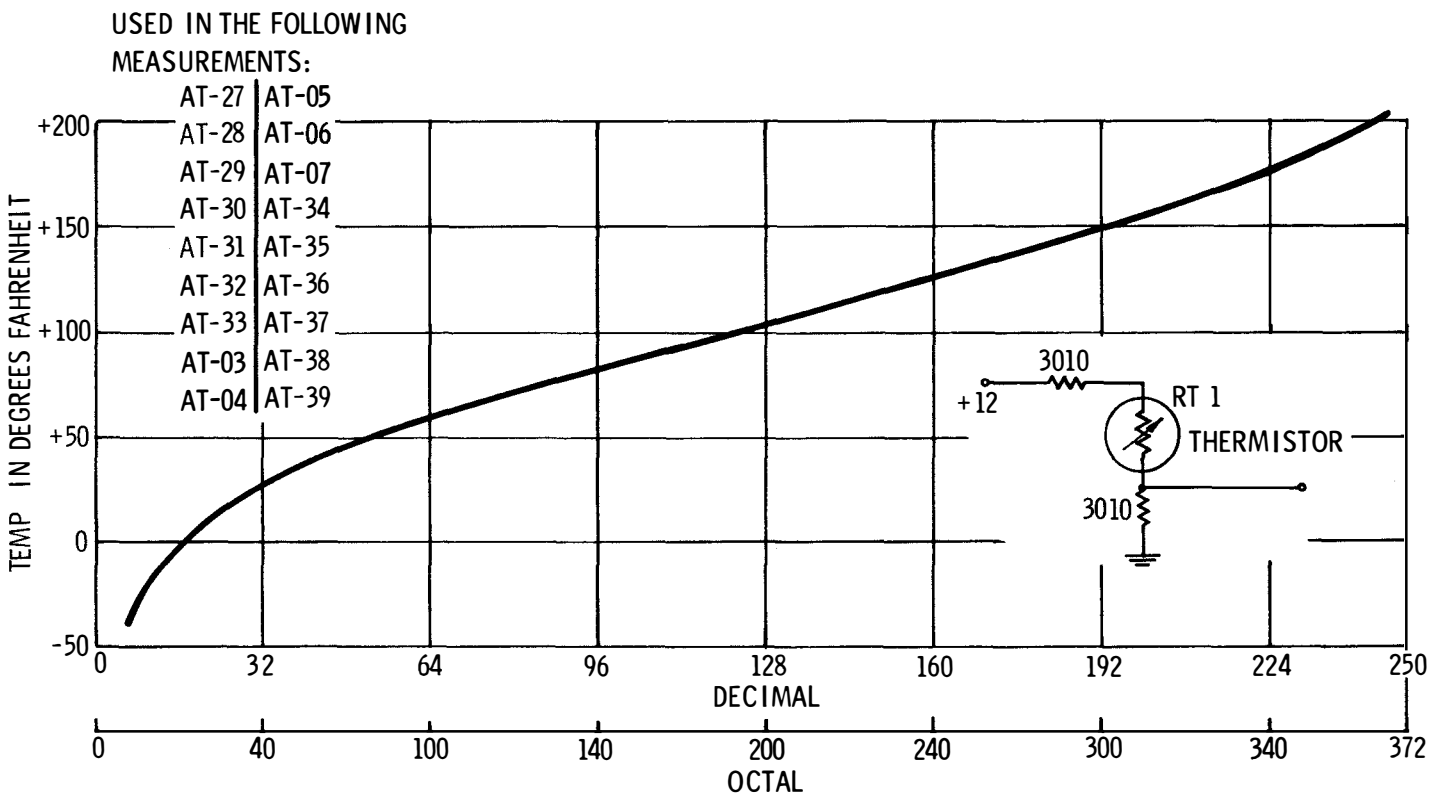

NOV 67 5178.7.44

ALSEP TELEMETRY LINK

* DIGITAL DATA PROCESSOR (DDP)
* MULTIPLEXER/CONVERTER
* TRANSMITTERS (TWO)
* DIPLEXER/SWITCH
* ANTENNA

DEC 67 5178.7.45

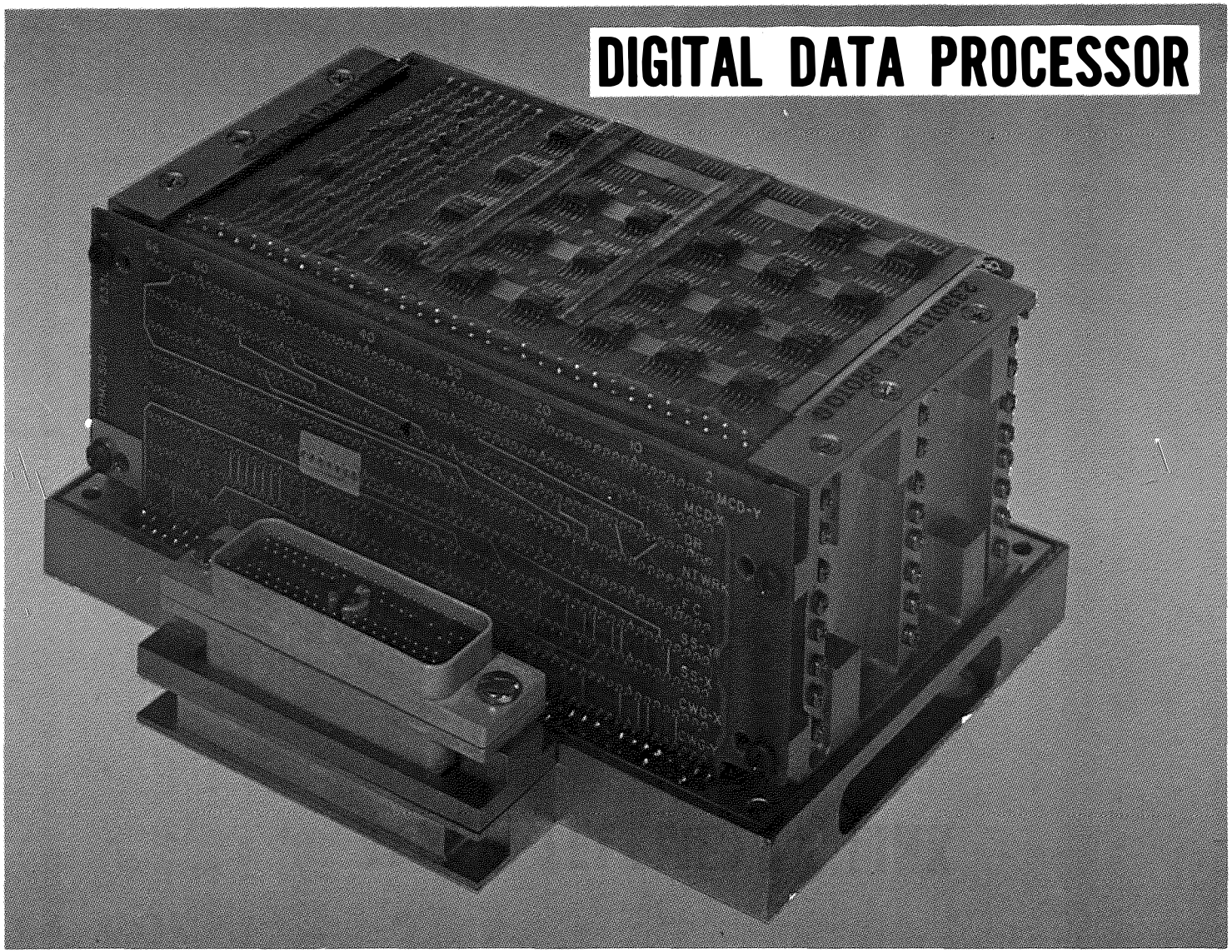

JAN 68 5178.7.46

DIGITAL DATA PROCESSOR

PHYSICAL DESCRIPTION -

SIZE - 2.8 X 3.94 X 6.25 INCHES

WEIGHT - 3.03 POUNDS

POWER - 450 MILLIWATTS AT 5 VDC
50 MILLIWATTS AT 12 VDC
(NOMINAL AT ROOM AMBIENT TEMPERATURE)

PARTS COUNT - 199 FLATPACKS
2 TRANSISTORS
41 RESISTORS
19 CAPACITORS
3 DIODES

PARTS ARE MOUNTED ON 9 PRINTED CIRCUIT BOARDS WITH FROM 3 TO 12 LAYERS

CONNECTOR - HUGHES - 244 PIN

SEPT 68 5178.7.47

DIGITAL DATA PROCESSOR

THE DIGITAL DATA PROCESSOR -

* IS THE FOCAL POINT FOR THE COLLECTION, FORMATTING AND CONTROL OF ALL TELEMETERED DATA
* CONTAINS COMMAND SELECTABLE "X" AND "Y" SECTIONS. EXCEPT FOR THE FRAME COUNTER AND INTERFACE CIRCUITS, THE DDP IS FULLY REDUNDANT
* HAS 3 MODES OF OPERATION DEFINED AS "NORMAL" (1060b/s), "SLOW" (530b/s) AND ACTIVE SEISMIC (10,600b/s)
* USES A CRYSTAL OSCILLATOR TO DERIVE ALL TIMING AND CONTROL SIGNALS
* COLLECTS DATA INTO A 64 WORD FRAME REPEATING EACH 604 MILLISECONDS. EACH WORD CONSISTS OF 10 BITS OR ABOUT 9.43 MILLISECONDS (NORMAL MODE)
* PROCESSES COLLECTED DATA INTO THE REQUIRED TELEMETRY FORMAT IS SERIAL FORM. EACH DATA SOURCE IS SAMPLED AT LEAST ONCE PER FRAME

DEC 67 5178.7.48

DATA PROCESSOR
SIMPLIFIED BLOCK DIAGRAM

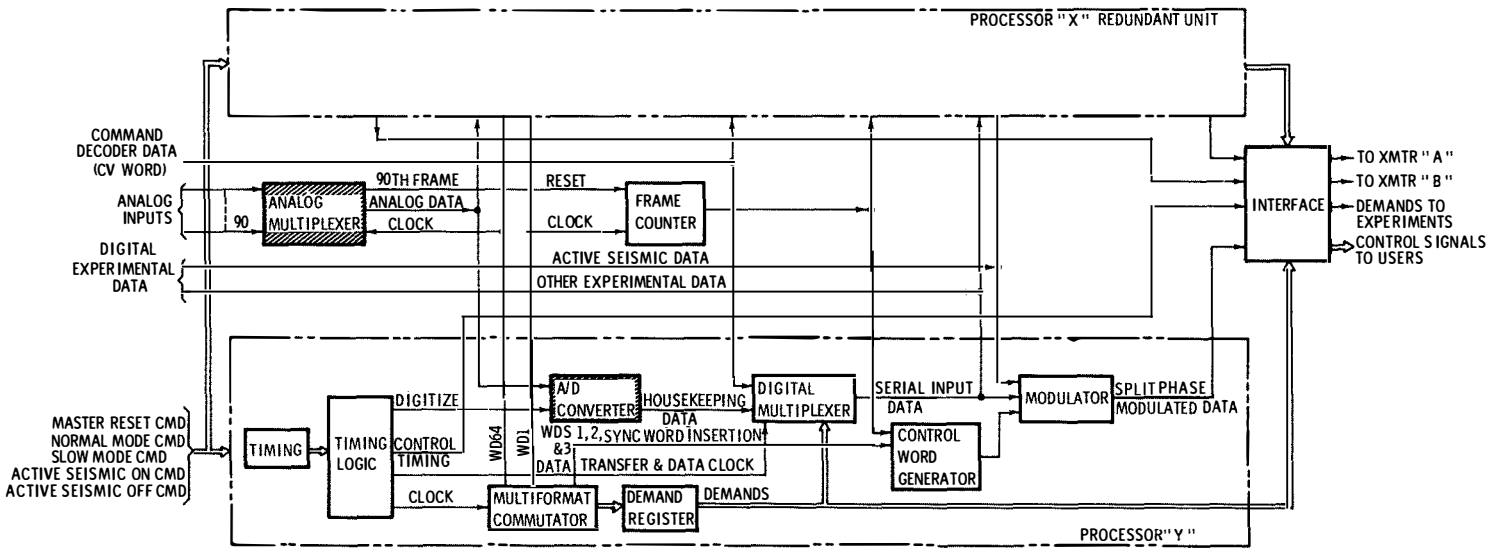

SEPT 68 5178.7.49

GENERATION OF BASIC CLOCKS

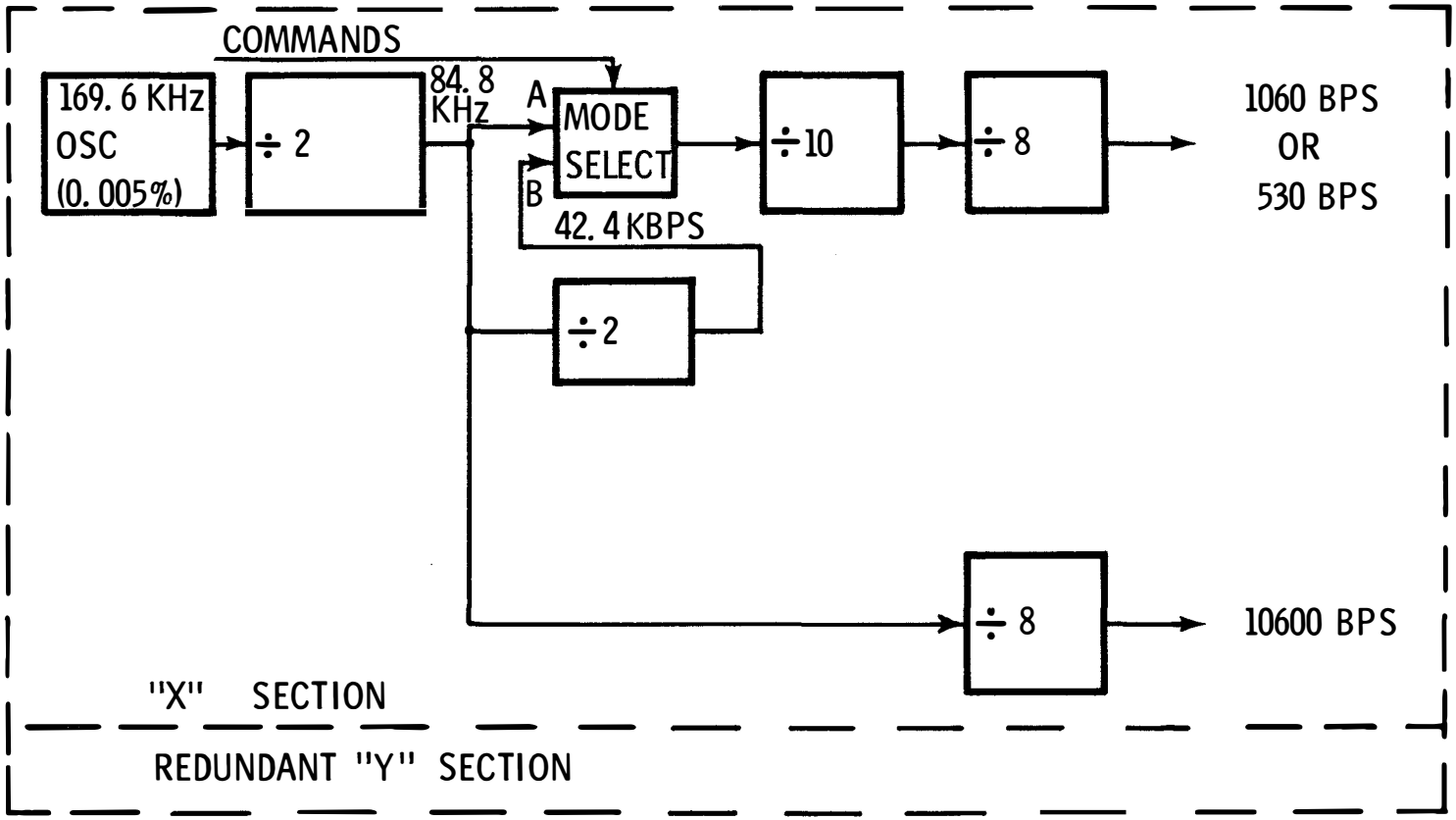

A - NORMAL MODE
B - SLOW MODE

APR 69 5178.7.50

DIGITAL DATA PROCESSOR

* CONTROL WORD GENERATOR
  - GENERATES THE 22-BIT SYNCHRONIZATION CODE
  - PROVIDES MODE, FRAME AND ALSEP ID IN THE LAST 8 BITS OF THE 30-BIT SYNCH WORD
* SPLIT PHASE MODULATOR
  - ENCODES DATA INTO INTO A "SPLIT PHASE" SIGNAL
  - PCM "0" IS REPRESENTED BY "01" AND CAUSES A POSITIVE PHASE TRANSITION
  - PCM "1" IS REPRESENTED BY A "10" AND CAUSES NEGATIVE PHASE TRANSITION
* FRAME COUNTER
  - IS NOT REDUNDANT
  - CONTAINS A COUNTER WHICH IS ADVANCED ONE STEP PER 64 WORD FRAME
  - IS RESET BY A 90TH FRAME "END OF FRAME" SIGNAL FROM THE MULTIPLEXER/CONVERTER

DIGITAL DATA PROCESSOR

* MULTIFORMAT COMMUTATOR
  - USES 2 DIVIDE-BY-8 COUNTERS WITH GATING FOR ANY ONE OF 64 CONSECUTIVE PERIODS (WORDS)
  - PRODUCES SIGNALS OF ONE WORD LENGTH AND MULTIPLES OF ONE WORD LENGTH TO SELECT AND GATE DATA INTO A MODULATOR
  - CONTAINS A "PATCH PLANE" FOR FLEXIBLE WORD ASSIGNMENTS
* DEMAND REGISTER
  - ACTS AS A BUFFER BETWEEN THE DEMAND DECODER ASSEMBLY AND THE DEMAND LINES TO ELIMINATE GATING TRANSIENTS
  - ACTS AS A MASTER SWITCH TO INHIBIT ALL DEMANDS DURING ASE MODE
* DIGITAL MULTIPLEXER
  - CONTAINS A 10-BIT SHIFT REGISTER TO ACCEPT 8 PARALLEL BITS FROM THE A/D CONVERTER OR 8 SERIAL BITS FROM THE COMMAND DECODER
  - SHIFTS OUT 10-BIT WORDS WITH "ZEROS" IN THE TWO MOST SIGNIFICANT FIGURES. BITS ARE SHIFTED HIGH ORDER FIRST

FORMAT FLIGHT SYSTEMS 1 & 2

1 x	2 x	3 x	4 X	5 0	6 X	7 S	8 X
9 -	10 X	11 -	12 X	13 -	14 X	15 I	16 X
17 0	18 X	19 0	20 X	21 0	22 X	23 S	24 X
25 -	26 X	27 -	28 X	29 -	30 X	31 I	32 X
33 H	34 X	35 ●	36 X	37 ●	38 X	39 S	40 X
41 -	42 X	43 -	44 X	45 -	46 CV	47 I	48 X
49 0	50 X	51 0	52 X	53 0	54 X	55 S	56 I
57 -	58 X	59 -	60 X	61 -	62 X	63 I	64 X

# OF WORDS PER FRAME	LEGEND	ASSIGNMENTS
3	x	CONTROL
29	X	PASSIVE SEISMIC (SHORT PERIOD)
12	-	PASSIVE SEISMIC (LONG PERIOD SEISMIC)
2	●	PASSIVE SEISMIC (LONG PERIOD TIDAL + TEMP)
7	0	MAGNETOMETER
4	S	SOLAR WIND
5	I	SUPRATHERMAL ION DETECTOR/CCGE
0	HF	HEAT FLOW
0	CP	CHARGED-PARTICLE
1	CV	COMMAND VERIFICATION (ALL ZEROS IF NO COMMAND)
1	H	HOUSEKEEPING
	NA	NOT ASSIGNED (ALL ZEROS TRANSMITTED)
0	CG	COLD CATHODE GUAGE EXPERIMENT (MSC)

EACH BOX CONTAINS ONE 10 BIT WORD. TOTAL REPRESENTS ONE FRAME OR 640 BITS.

SEPT 68 5178.7.53

TELEMETRY FORMAT
FLEXIBLE WORD ASSIGNMENTS

1	2	3	4	5 X	6	7 X	8
9	10	11	12 X	13	14	15 X	16
17 X	18	19 X	20	21 X	22	23 X	24 X
25	26	27	28	29	30	31 X	32
33 X	34 X	35	36	37	38	39 X	40
41	42	43	44	45	46 X	47 X	48
49 X	50	51 X	52	53 X	54	55 X	56 X
57	58	59	60	61	62	63 X	64

WORDS MARKED WITH X ARE ASSIGNED BY DRAWING DURING FABRICATION OF THE DIGITAL DATA PROCESSOR'S MULTI-FORMAT COMMUTATOR.

NOV 67 5178.7.54

FORMAT FLIGHT SYSTEM #3

1 x	2 x	3 x	4 X	5 CV	6 X	7 CP	8 X
9 -	10 X	11 -	12 X	13 -	14 X	15 CG	16 X
17 CP	18 X	19 CP	20 X	21 HF	22 X	23 CP	24 X
25 -	26 X	27 -	28 X	29 -	30 X	31 CG	32 X
33 H	34 X	35 •	36 X	37 •	38 X	39 CP	40 X
41 -	42 X	43 -	44 X	45 -	46 X	47 CG	48 X
49 NA	50 X	51 NA	52 X	53 NA	54 X	55 CP	56 CG
57 -	58 X	59 -	60 X	61 -	62 X	63 CG	64 X

# OF WORDS PER FRAME	LEGEND	ASSIGNMENTS
3	x	CONTROL
30	X	PASSIVE SEISMIC (SHORT PERIOD)
12	-	PASSIVE SEISMIC (LONG PERIOD SEISMIC)
2	•	PASSIVE SEISMIC (LONG PERIOD TIDAL + TEMP)
0	0	MAGNETOMETER
0	S	SOLAR WIND
0	I	SUPRATHERMAL ION DETECTOR/CCGE
1	HF	HEAT FLOW
6	CP	CHARGED PARTICLE
1	CV	COMMAND VERIFICATION (ALL ZEROS IF NO COMMAND)
1	H	HOUSEKEEPING
3	NA	NOT ASSIGNED (ALL ZEROS TRANSMITTED)
5	CG	COLD CATHODE GUAGE EXPERIMENT (MSC)

EACH BOX CONTAINS ONE 10 BIT WORD. TOTAL REPRESENTS ONE FRAME OR 640 BITS.

SEPT 68 5178.7.55

FORMAT FLIGHT SYSTEM #4

1 x	2 x	3 x	4 X	5 CV	6 X	7 CP	8 X
9 -	10 X	11 -	12 X	13 -	14 X	15 I	16 X
17 CP	18 X	19 CP	20 X	21 NA	22 X	23 CP	24 X
25 -	26 X	27 -	28 X	29 -	30 X	31 I	32 X
33 H	34 X	35 ●	36 X	37 ●	38 X	39 CP	40 X
41 -	42 X	43 -	44 X	45 -	46 X	47 I	48 X
49 NA	50 X	51 NA	52 X	53 NA	54 X	55 CP	56 I
57 -	58 X	59 -	60 X	61 -	62 X	63 I	64 X

# OF WORDS PER FRAME	LEGEND	ASSIGNMENTS
3	x	CONTROL
30	X	PASSIVE SEISMIC (SHORT PERIOD)
12	-	PASSIVE SEISMIC (LONG PERIOD SEISMIC)
2	●	PASSIVE SEISMIC (LONG PERIOD TIDAL + TEMP)
0	0	MAGNETOMETER
0	S	SOLAR WIND
5	I	SUPRATHERMAL ION DETECTOR/CCGE
0	HF	HEAT FLOW
6	CP	CHARGED PARTICLE
1	CV	COMMAND VERIFICATION (ALL ZEROS IF NO COMMAND)
1	H	HOUSEKEEPING
4	NA	NOT ASSIGNED (ALL ZEROS TRANSMITTED)
0	CG	COLD CATHODE GUAGE EXPERIMENT (MSC)

EACH BOX CONTAINS ONE 10 BIT WORD. TOTAL REPRESENTS ONE FRAME OR 640 BITS.

SEPT 68 5178.7.56

ALSEP DATA FORMAT

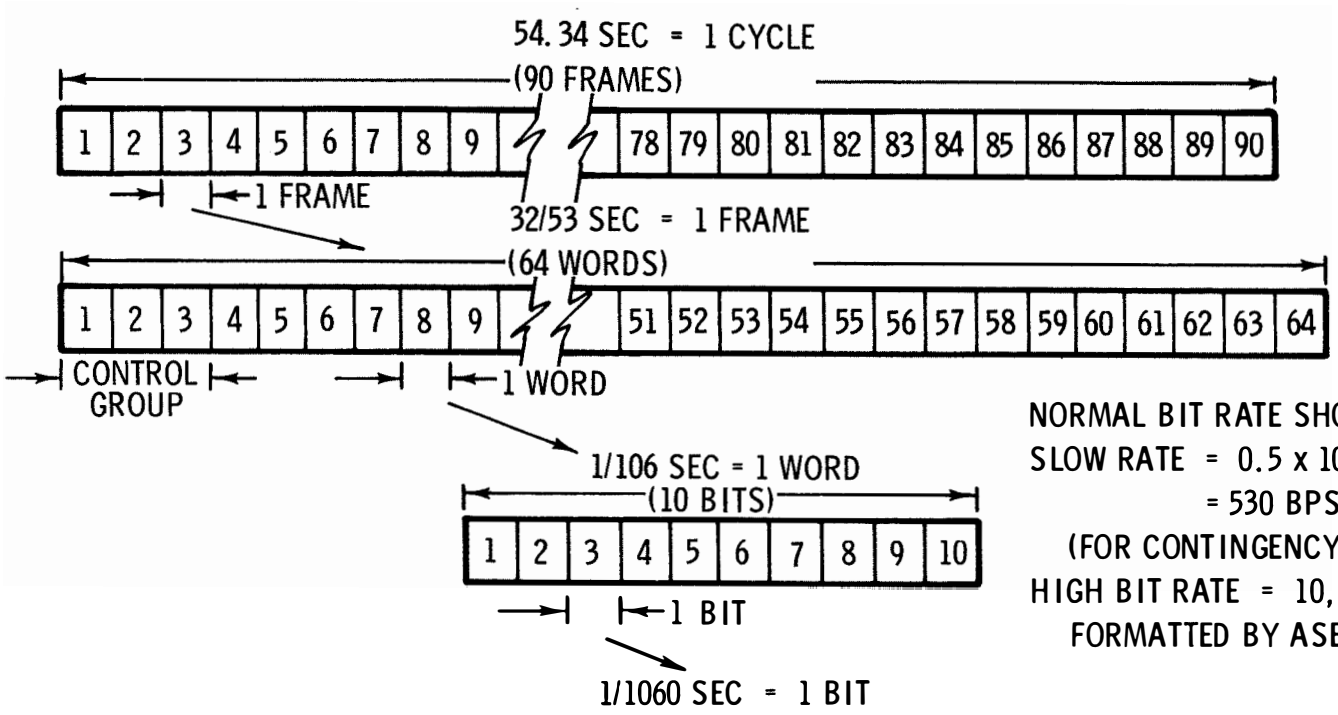

NORMAL BIT RATE SHOWN
SLOW RATE = 0.5 x 1060
= 530 BPS
(FOR CONTINGENCY)
HIGH BIT RATE = 10,600 BPS
FORMATTED BY ASE

DEC 67 5178.7.57

CONTROL WORDS AND CMD VERIFICATION

DA-01 ALSEP FRAME SYNC

BARKER CODE — COMPLEMENT OF BARKER CODE

1	2	3		10	11	13	12	14		21	22	23	24	25	26	27	28	29	30
1	1	1		1	0	0	0	0		0	1	F1	F2	F3	F4	F5	F6	F7	M

DA-02 ALSEP FRAME CNTR
(1, 2...89,0)

MODE BIT, DEFINED AS FOLLOWS:

FRAME	MODE BIT	MEANING	
1	1	NORMAL BIT RATE	DA-03 ALSEP BIT RT ID
2	1	LOW BIT RATE	
3	X MSB	DATA PROC ID NO.	DA-04 ALSEP ID
4	X		
5	X		
6	NONE	NONE	
•	"	"	
•	"	"	
•	"	"	
89	"	"	
0	NONE	NONE	

WORD 46 ON ALSEP 1

FILLER BITS (ZEROS)

1	2	3	4	5	6	7	8	9	10

DA-05 ALSEP CMD AS RCVD

DA-06 ALSEP CMD MAP

ONE WORD SAMPLE AS EACH COMMAND IS RECEIVED AT ALSEP, AT OTHER TIMES THE SAMPLE IS ALL ZEROS

SEPT 68 5178.7.58

ALSEP 1 DATA COMMUTATION

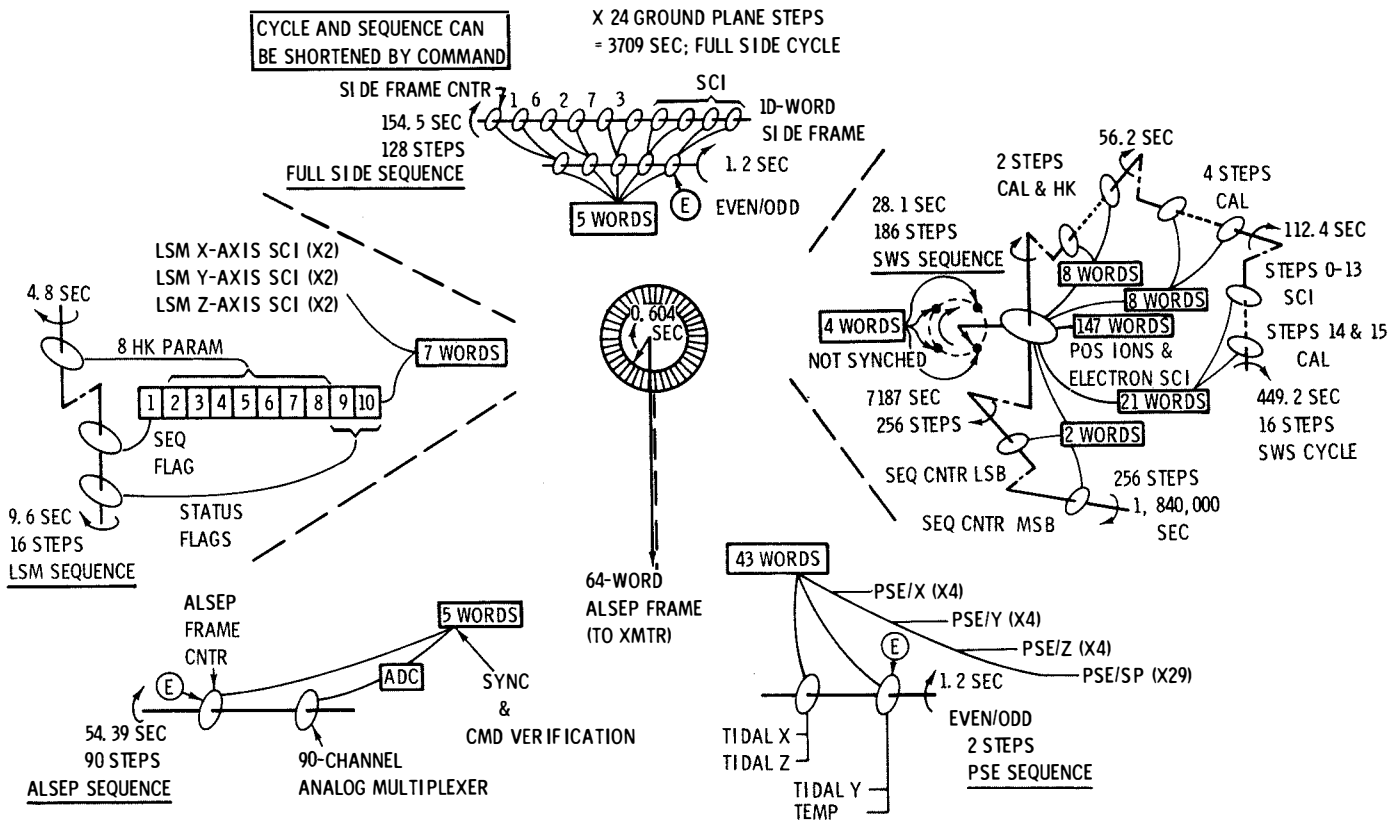

NOTE: TIMES ARE FOR NORMAL BIT RATE

SEPT 68 5178.7.59

DATA PROCESSOR TIMING/CONTROL SIGNALS

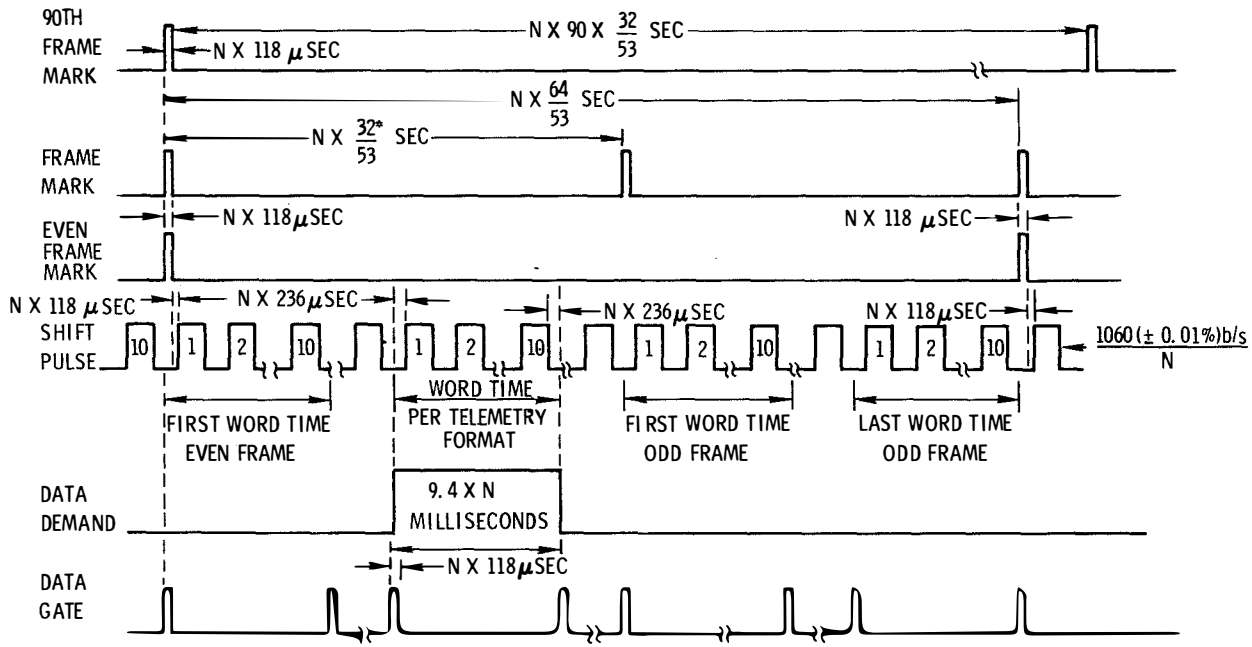

N = 1 FOR NORMAL MODE OF 1060 bps

N = 2 FOR SLOW MODE OF 530 bps

LOGIC LEVELS: "ONE", + 4.0 ± 1.5 VOLTS; "ZERO", + 0.2 ± 0.2 VOLTS

$^{*}\frac{32}{53}$ SEC $= \frac{640 \text{ BITS PER FRAME}}{1060 \text{ bps}}$ ALL OTHER TIMES ARE ACCURATE ONLY TO THE SIGNIFICANT FIGURE SHOWN.

DEC 67 5178.7.60

TIMING/CONTROL SIGNAL INTERFACE

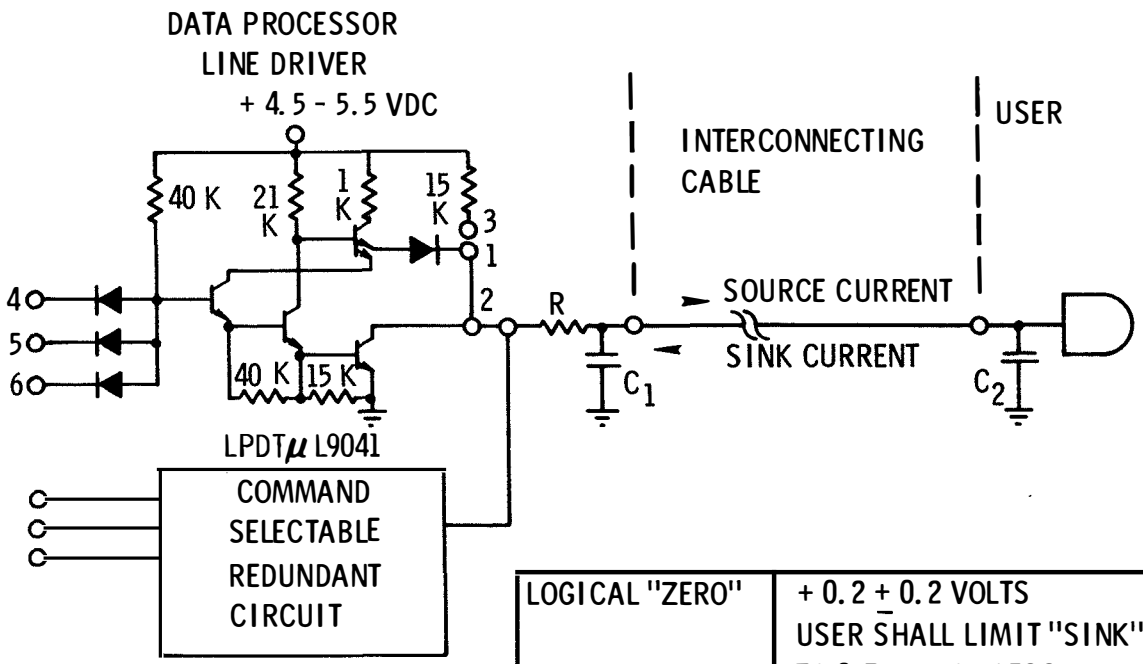

LOGICAL "ZERO"	+ 0.2 ± 0.2 VOLTS USER SHALL LIMIT "SINK" CURRENT TO 0.75 ma OR LESS
LOGICAL "ONE"	+ 4.0 ± 1.5 VOLTS USER SHALL LIMIT "SOURCE" CURRENT TO 0.045 ma OR LESS
R, C_1 & C_2	CONTROL RISE AND FALL TIME

SEPT 68 5178.7.61

EXPERIMENT/DATA PROCESSOR INTERFACE
DIGITAL DATA

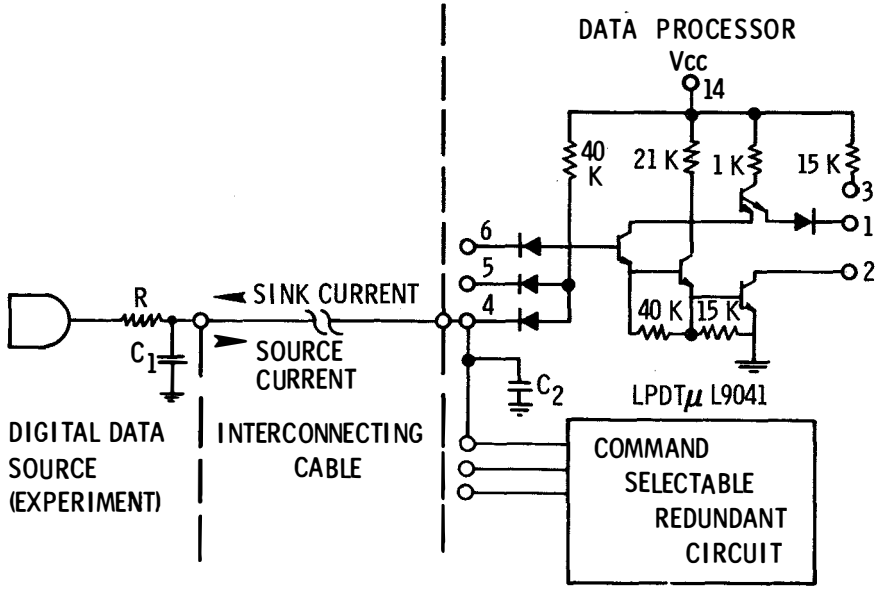

LOGICAL "ZERO"	+ 0.2 ± 0.2 VOLTS THE SOURCE LINE DRIVER MUST BE CAPABLE OF "SINKING" UP TO 0.215 ma
LOGICAL "ONE"	+ 4.0 ± 1.5 VOLTS THE SOURCE LINE DRIVER MUST BE CAPABLE OF "SOURCING" UP TO 0.012 ma
R, C1, & C2	CONTROL RISE AND FALL TIME

SEPT 68 5178.7.62

DIGITAL DATA PROCESSOR TELEMETRY SUMMARY

CHANNEL 2	AE-01	0.25 VDC CALIBRATION OF ADC A ZENER DIODE AND RESISTIVE DIVIDER IS USED TO PROVIDE AN ACCURATE REFERENCE VOLTAGE FOR TM CHANNEL CALIBRATION
CHANNEL 3	AE-02	4.75 VDC CALIBRATION OF ADC THIS VOLTAGE IS OBTAINED FROM THE SAME NETWORK AS THE 0.25 VDC AND PROVIDES A SECOND CALIBRATION POINT
CHANNEL 46	AT-29	DIGITAL DP, BASE TEMPERATURE USES A THERMISTOR LOCATED ON THE BASE PLATE
CHANNEL 47	AT-30	DIGITAL DP, INTERNAL TEMPERATURE USES A THERMISTOR LOCATED ON ONE OF THE PRINTED CIRCUIT BOARDS

SEPT 68 5178.7.63

ANALOG MULTIPLEXER CONVERTER

DEC 67 5178.7.64

ANALOG MULTIPLEXER/CONVERTER
PHYSICAL DESCRIPTION

SIZE	2.62 x 4.23 x 5.92 inches	
WEIGHT	2.2 pounds	
POWER	REQUIRES A TOTAL OF 1435 MILLIWATTS (NOMINAL AT ROOM AMBIENT) AT THE FOLLOWING VOLTAGE LEVELS-	
	65 milliwatts at + 15 vdc	
	150 milliwatts at + 12 vdc	
	1100 milliwatts at + 5 vdc	
	120 milliwatts at - 12 vdc	
PARTS COUNT	INTEGRATED CIRCUITS	76
	FIELD EFFECT TRANSISTORS	156
	TRANSISTORS	185
	DIODES	307
	ZENER DIODES	9
	CAPACITORS	158
	RESISTORS	102
	CRYSTALS	2
PACKAGING	ALL PARTS ARE MOUNTED ON 15 TWO LAYER PCBs	
CONNECTOR	HUGHES - 244 PIN	

DEC 67 5178.7.65

ANALOG MULTIPLEXER/CONVERTER

THE COMPONENT -

- CONSISTS OF A 90 CHANNEL ANALOG MULTIPLEXER, A SEQUENCER, BUFFER AMPLIFIERS AND TWO EIGHT-BIT A/D CONVERTERS WITH BUFFERED OUTPUTS
- USES REDUNDANT GATES, DRIVERS AND A/D CONVERTERS FOR RELIABLE OPERATION
- MONITORS UP TO 90 DATA SOURCES ON A SEQUENTIAL SAMPLE BASIS. REQUIRES ABOUT 54 SECONDS FOR ONE COMPLETE SEQUENCE OF SAMPLES
- CONVERTS EACH INPUT INTO AN 8-BIT BINARY WORD
- PROVIDES THE 8-BIT BINARY WORD IN PARALLEL TO THE DIGITAL MULTIPLEXER OF THE DDP

SIMPLIFIED BLOCK DIAGRAM

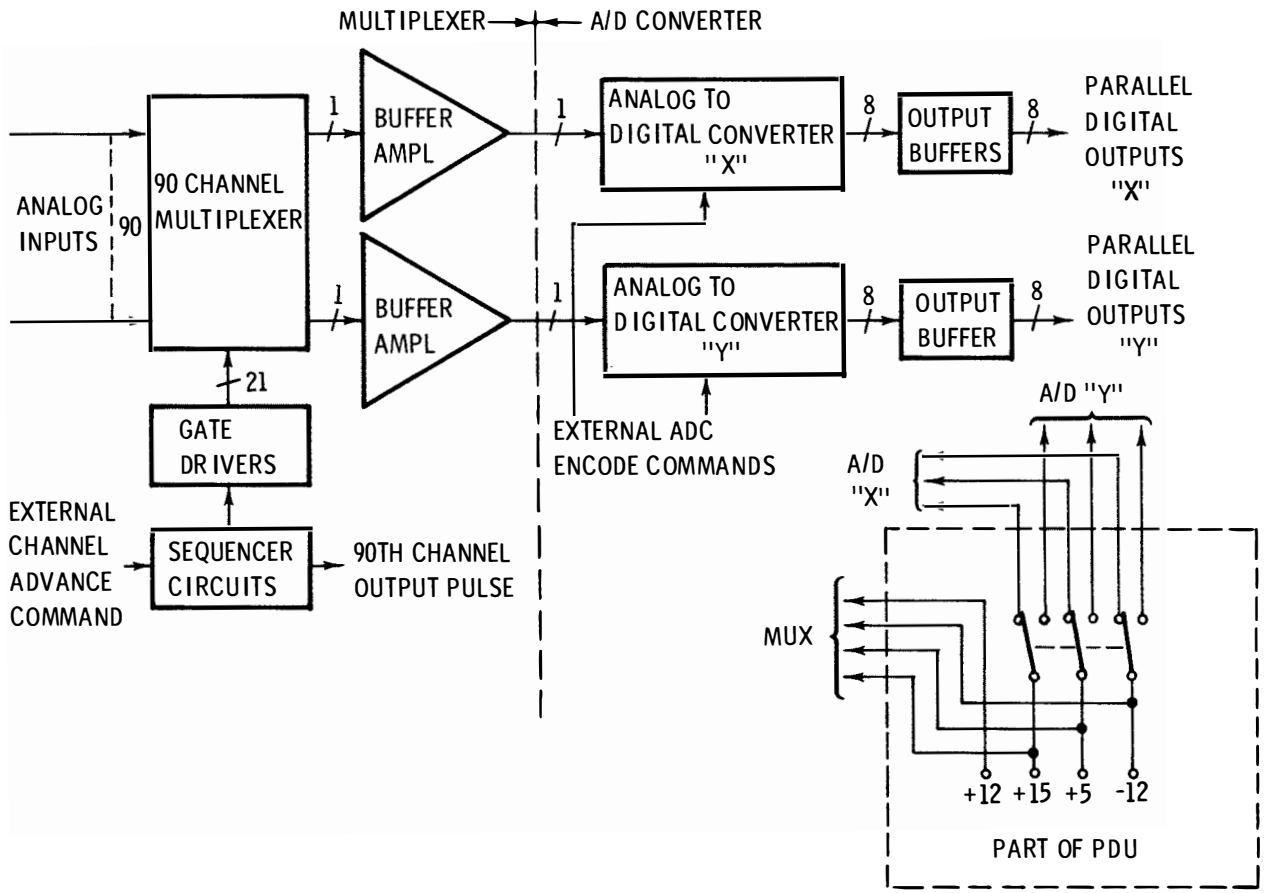

SEPT 68 5178.7.67

MULTIPLEXER GATE ARRANGEMENT DIAGRAM

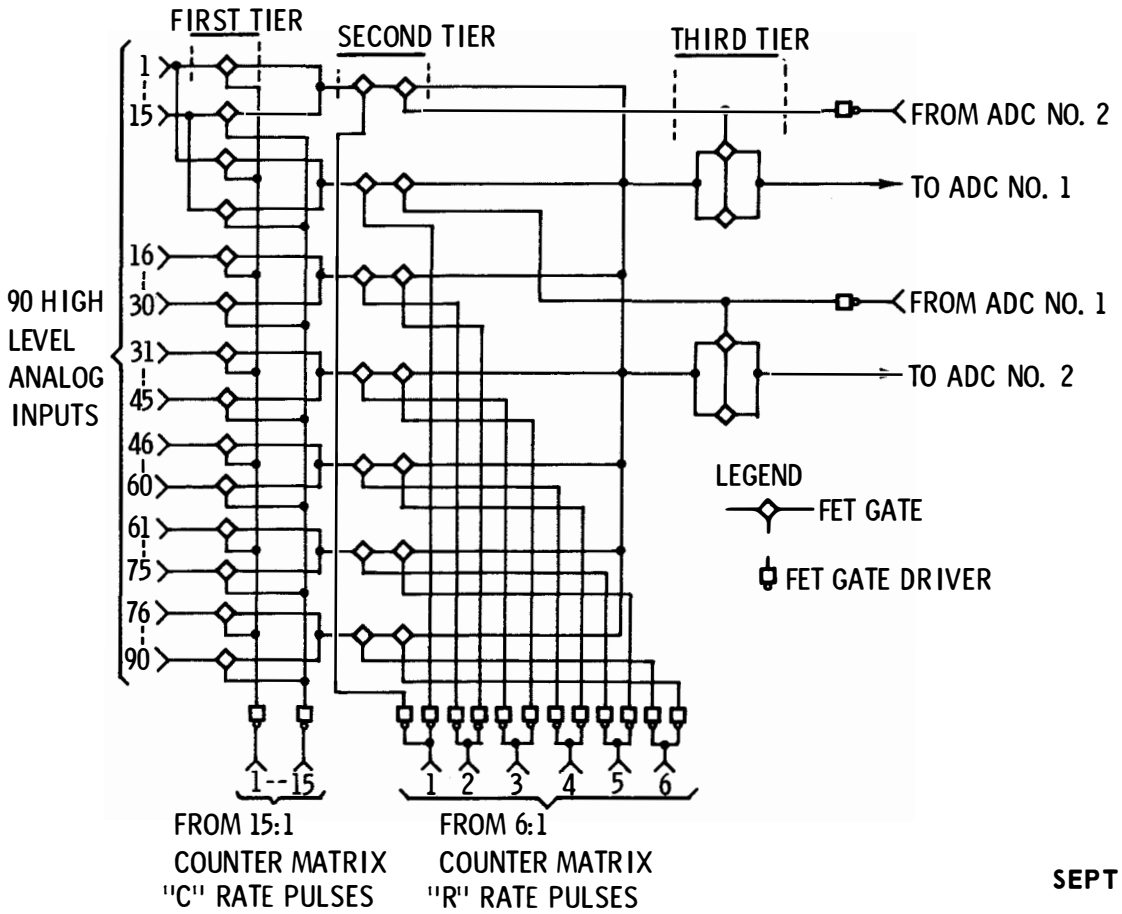

SEPT 68 5178.7.68

MULTIPLEXER TIMING DIAGRAM

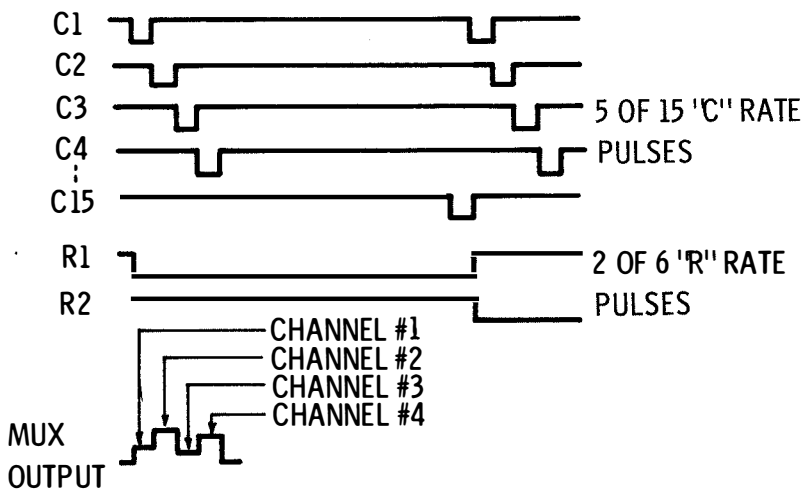

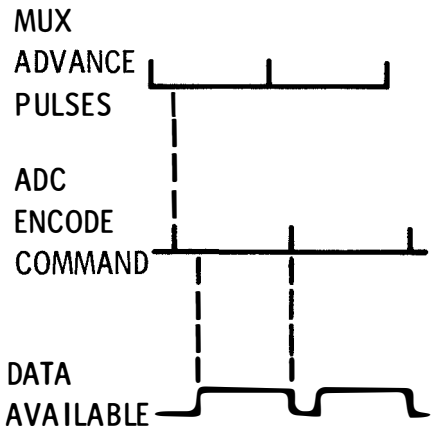

	C1	C2	C3	C4	C5	C6	C7	C8	C9	C10	C11	C12	C13	C14	C15
R1	1	2	3	4	5	6	7	8	9	10	11	12	13	14	15
R2	16														30
R3	31														45
R4	46														60
R5	61														75
R6	76														90

DATA FORMAT AND CHANNEL SEQUENCE

SEPT 68 5178.7.69

A/D CONVERTER FUNCTIONAL BLOCK DIAGRAM

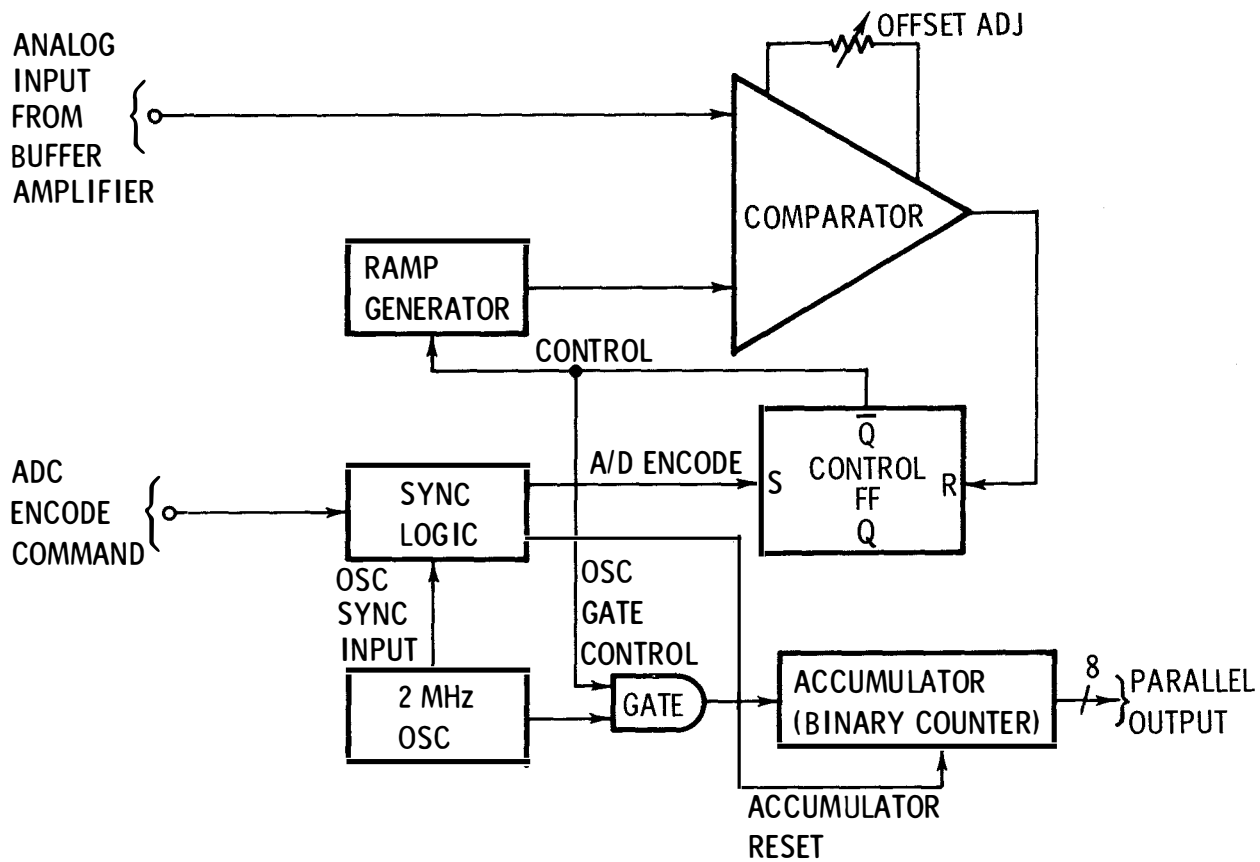

SEPT 68 5178.7.70

INPUT REQUIREMENTS

ANALOG INPUTS

RANGE	0 TO +5 volts
INPUT Z	≧ 1 megohm (ON state)
	≧50 megohms (OFF state)
SOURCE Z	≦ 10 k ohms

*PROPER OPERATION WITH AN OVERVOLTAGE OF

+8 to -6.5 volts for channels 21, 36, 45, & 80
+8 to -9 volts for channels 6, 7, 26, 52, 67, & 70
+8 to -5 volts for all other channels

IS NOT DAMAGED BY AN OVERVOLTAGE OF ± 12 VOLTS ON ANY CHANNEL.

ADVANCE PULSE

REQUIRED FOR ADVANCING MULTIPLEXER THROUGH ITS 90 CHANNELS.
SUPPLIED BY DDP

ADC START (ENCODE) PULSE

DRIVES SYNC LOGIC TO START A/D CONVERSION. SUPPLIED BY DDP

*PROPER OPERATION IS NOT GUARANTEED BEYOND PLUS AND MINUS OPERATIONAL LIMITS

APR 69 5178.7.71

ANALOG MULTIPLEXER/CONVERTER OUTPUTS

BINARY OUTPUT -

00000000	FOR A NEGATIVE INPUT
00000001	FOR ZERO INPUT
11111110	FOR +5 VOLTS INPUT
11111111	FOR GREATER THAN +5 VOLTS INPUT

LOGICAL "0" IS +4.0 ± 1.5 VOLTS
LOGICAL "1" IS +0.2 ± 0.2 VOLTS

TEMPERATURE TELEMETRY

CHANNEL 33	AT-27	BASE TEMP (SIGNAL OBTAINED BY A THERMISTOR/ RESISTOR NETWORK POWERED BY +12 VDC THERMISTOR LOCATED ON BASE PLATE)
CHANNEL 34	AT-28	INTERNAL TEMP (SAME AS ABOVE EXCEPT THERMISTOR MOUNTED ON PCB)

ANALOG MULTIPLEXER CHANNEL ASSIGNMENTS

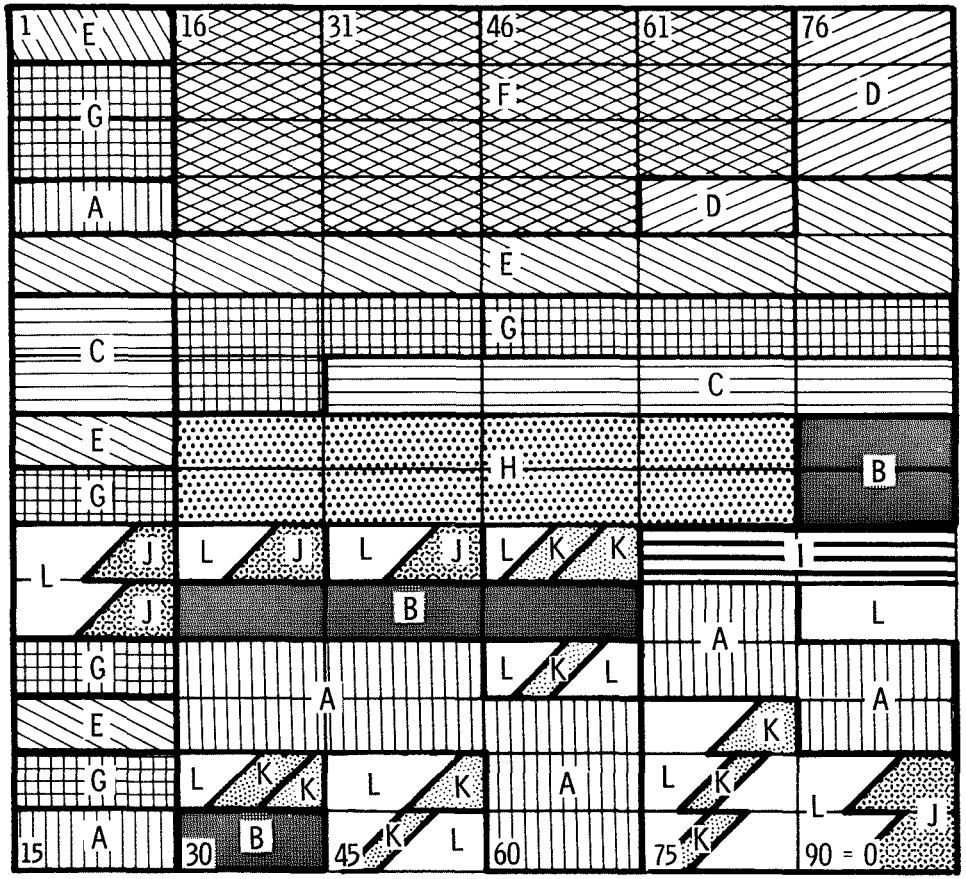

APPEARS IN WORD 33 ON ALSEP 1

- A — STRUCTURE & INSULATION TEMPERATURES (13)
- B — DUST CELLS (6)
- C — RTG TEMPERATURES (6)
- D — PCU TEMPERATURES (4)
- E — PCU INPUT/OUTPUT (10)
- F — DATA SUBSYSTEM TEMPERATURES (15)
- G — DATA SUBSYSTEM FUNCTIONAL (11)
- H — PSE (8)
- I — SIDE/CCGE (2)
- J — CPLEE (6)
- K — HEAT FLOW (6)/ASE (4) TOTAL (8)
- L — BLANK (1)

ALSEP 1 & 2 3 4

SEPT 68 5178.7.73

TRANSMITTER

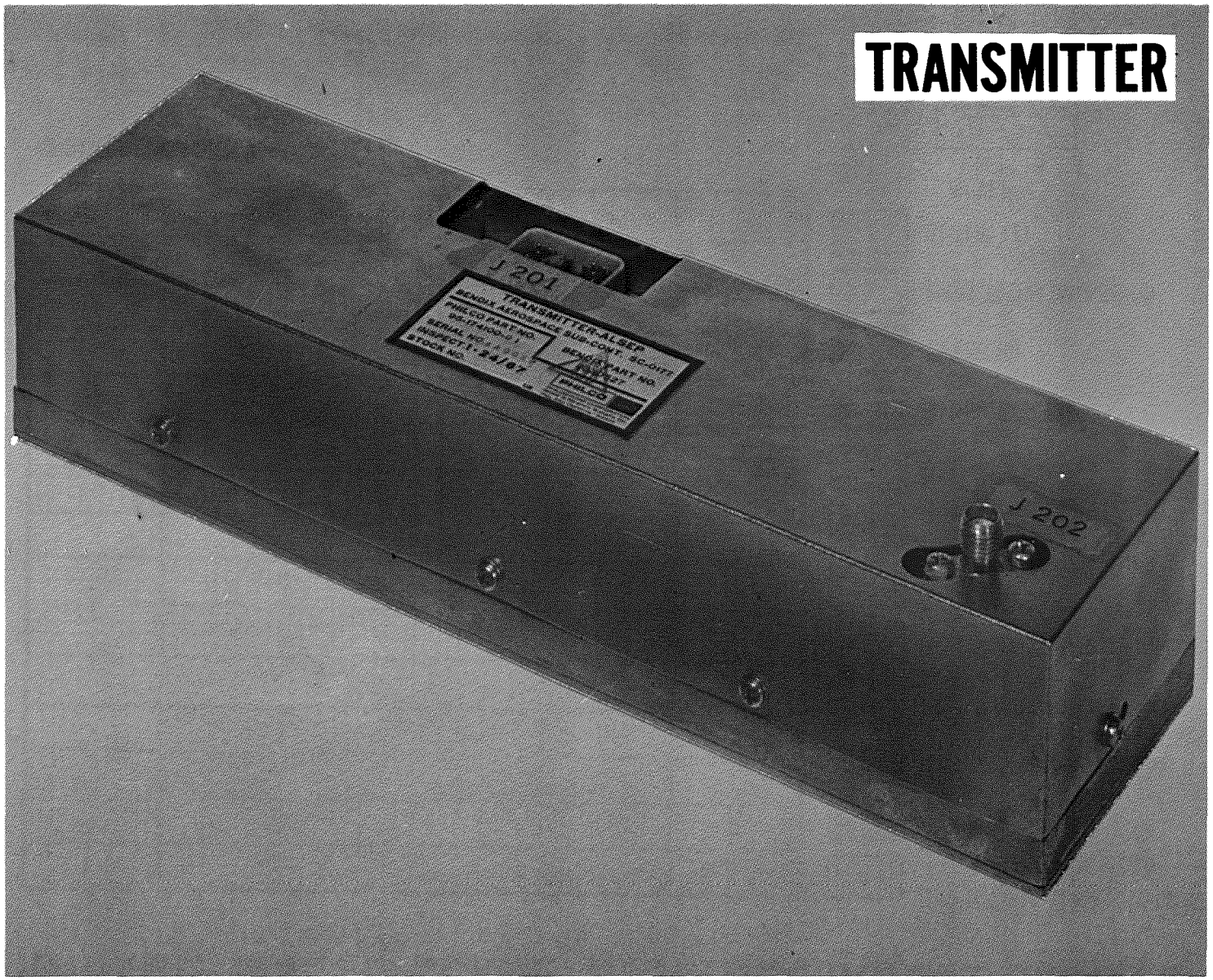

DEC 67 5178.7.74

TRANSMITTER

PHYSICAL DESCRIPTION

- SIZE 1.5 x 2 x 7.5 inches
- WEIGHT 1.17 pounds (each)
- POWER 8 watts at 29 VDC
  0.5 watts at 12 VDC
- EMPLOYS MODULAR CONSTRUCTION WITH 11 SEPARATE CIRCUIT MODULES
- MODULES ARE MOUNTED ON A MILLED MAGNESIUM BASE PLATE WITH INTER-MODULE WIRING THROUGH MILLED PASSAGEWAYS

TRANSMITTER

* PROVIDES A MINIMUM OF 1 WATT INTO A 50 OHM LOAD WITH A MAXIMUM VSWR OF 1.3:1
* PROPER CRYSTAL IS INSTALLED DURING MANUFACTURE FOR OPERATION ON EITHER 2276.5 MHz (CHANNEL #1), 2278.5 MHz (CHANNEL #2) OR 2275.5 MHz (CHANNEL #3). 2279.5 MHz (CHANNEL #4) IS ASSIGNED BUT NOT IMPLEMENTED
* FREQUENCY STABILITY IS 0.0025%/YEAR
* TWO IDENTICAL COMPONENTS, TRANS A AND TRANS B, ARE PROVIDED WITH ONE IN STANDBY
* EITHER A OR B MAY BE SELECTED BY COMMAND FROM THE MSFN
* IF ONE IS SWITCHED "OFF" DUE TO AN OVERCURRENT CONDITION, THE OTHER IS AUTOMATICALLY SWITCHED "ON"
* IF COMMANDED "OFF" A RESISTOR (HEATER) IS AUTOMATICALLY SWITCHED ON FOR CENT STA THERMAL STABILITY

TRANSMITTER, BLOCK DIAGRAM

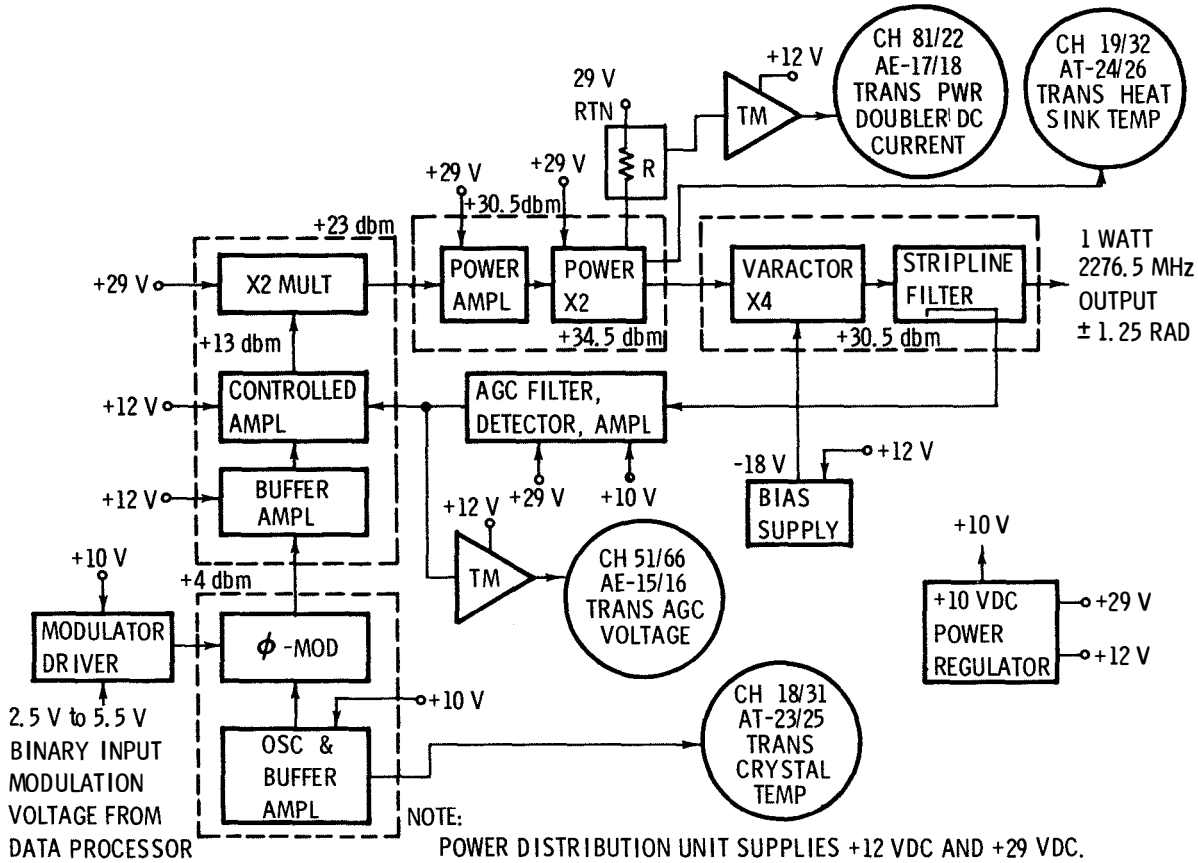

NOTE:
POWER DISTRIBUTION UNIT SUPPLIES +12 VDC AND +29 VDC.

SEPT 68 5178.7.77

TRANSMITTER
TELEMETRY SUMMARY

TRANSMITTER A		TELEMETRY DATA	TRANSMITTER B	
CHANNEL	SYMBOL		CHANNEL	SYMBOL
18	AT-23	TRANSMITTER CRYSTAL TEMP USES A 15 K OHM THERMISTOR AND 2 RESISTORS TO DEVELOP SIGNAL. PARTS ARE LOCATED IN OSC -BUFFER- MODULATOR MODULE	31	AT-25
19	AT-24	TRANSMITTER HEAT SINK TEMP USES A 15 K OHM THERMISTOR AND 2 RESISTORS TO DEVELOP SIGNAL. LOCATED IN POWER DOUBLER	32	AT-26
51	AE-51	TRANS AGC VOLTAGE AGC VOLTAGE IS AMPLIFIED TO GIVE TM SIGNAL OF PROPER LEVEL	66	AE-16
81	AE-17	TRANS PWR DOUBLER DC CURRENT SIGNAL OBTAINED FROM SMALL RE- SISTOR IN POWER RETURN	22	AE-18

APR 69 5178.7.78

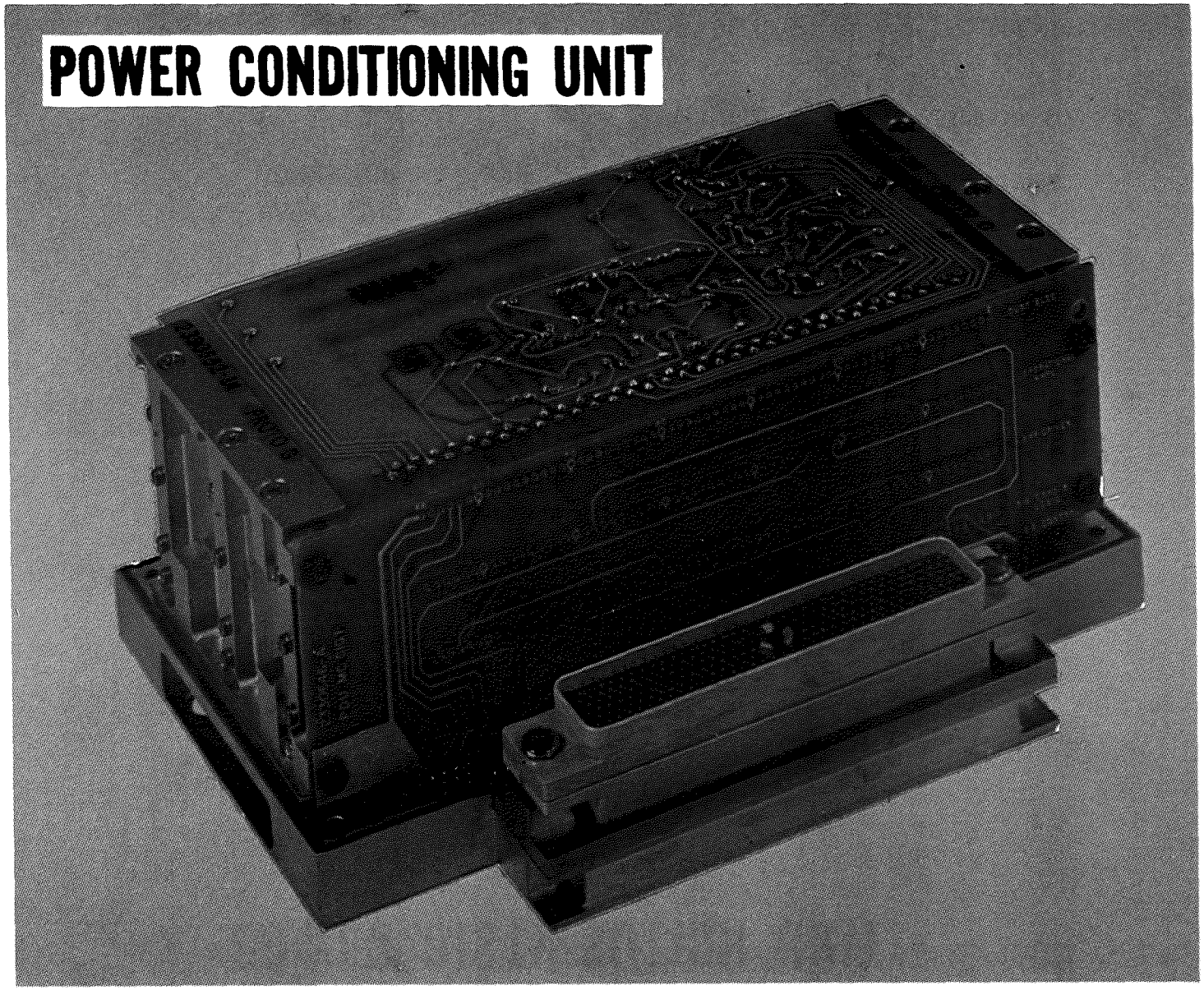

DEC 67 5178.7.79

POWER DISTRIBUTION UNIT

PHYSICAL DESCRIPTION OF THE PDU

* SIZE 2.8 x 4 x 7.25 inches
* WEIGHT 2.29 pounds
* POWER 375 milliwatts at +29 VDC
  75 milliwatts at +15 VDC
  735 milliwatts at +12 VDC
  85 milliwatts at + 5 VDC
  8 milliwatts at - 6 VDC
  475 milliwatts at -12 VDC
* PARTS COUNT - 17 FLATPACKS 238 RESISTORS
  37 TRANSISTORS 44 CAPACITORS
  11 AMPLIFIERS 7 FUSES
  98 DIODES 2 THERMISTORS
  27 RELAYS
* PACKAGING - ALL PARTS ARE MOUNTED ON 5 PCBs
* CONNECTOR - HUGHES - 244 PIN

SEPT 68 5178.7.80

POWER DISTRIBUTION UNIT

THE PDU -

- PROVIDES FOR THE DISTRIBUTION AND CONTROL OF POWER TO EXPERIMENTS AND CENT STA COMPONENTS
- CONTAINS CIRCUITRY TO PROTECT THE SYSTEM AGAINST OVER-LOADS OCCURING FROM COMPONENT FAILURES
- PROVIDES SIGNAL CONDITIONING FOR CENT STA AND POWER SUBSYSTEM TELEMETRY SIGNALS
- WILL, BY SEQUENTIAL TURN-OFF OF 3 EXPERIMENTS, ADJUST THE TOTAL POWER DEMAND TO A VALUE WITHIN THE AVAILABLE POWER LIMIT
- UPON SENSING A POWER OVERLOAD CONDITION, WAITS ABOUT 135 MILLISECONDS BEFORE SWITCHING AN EXPERIMENT TO STANDBY
- PROVIDES MOUNTING SPACE FOR THE "DUST DETECTOR" ELECTRONICS

SIMPLIFIED BLOCK DIAGRAM PDU

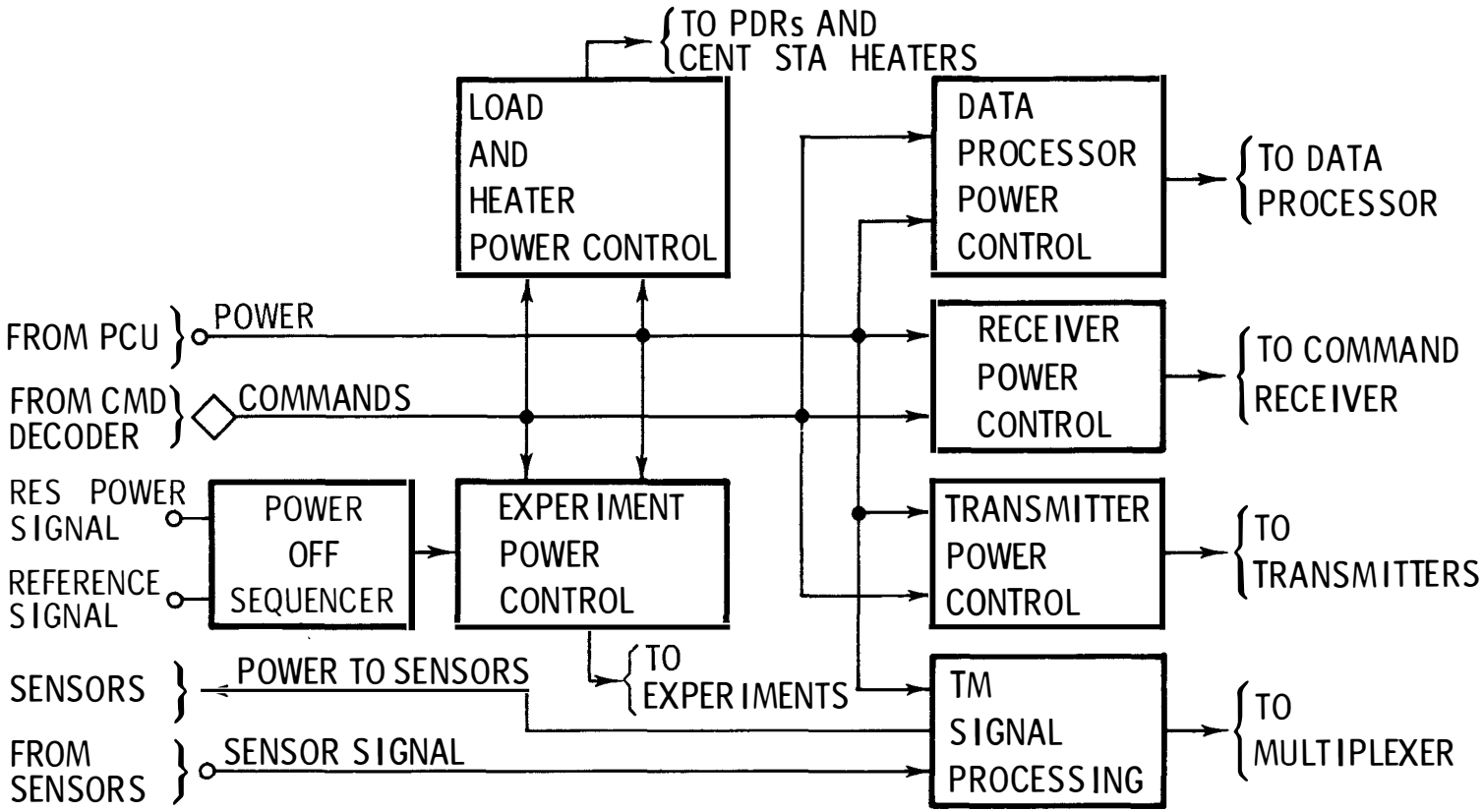

SEPT 68 5178.7.82

EXPERIMENT POWER CONTROL (1 OF 4)

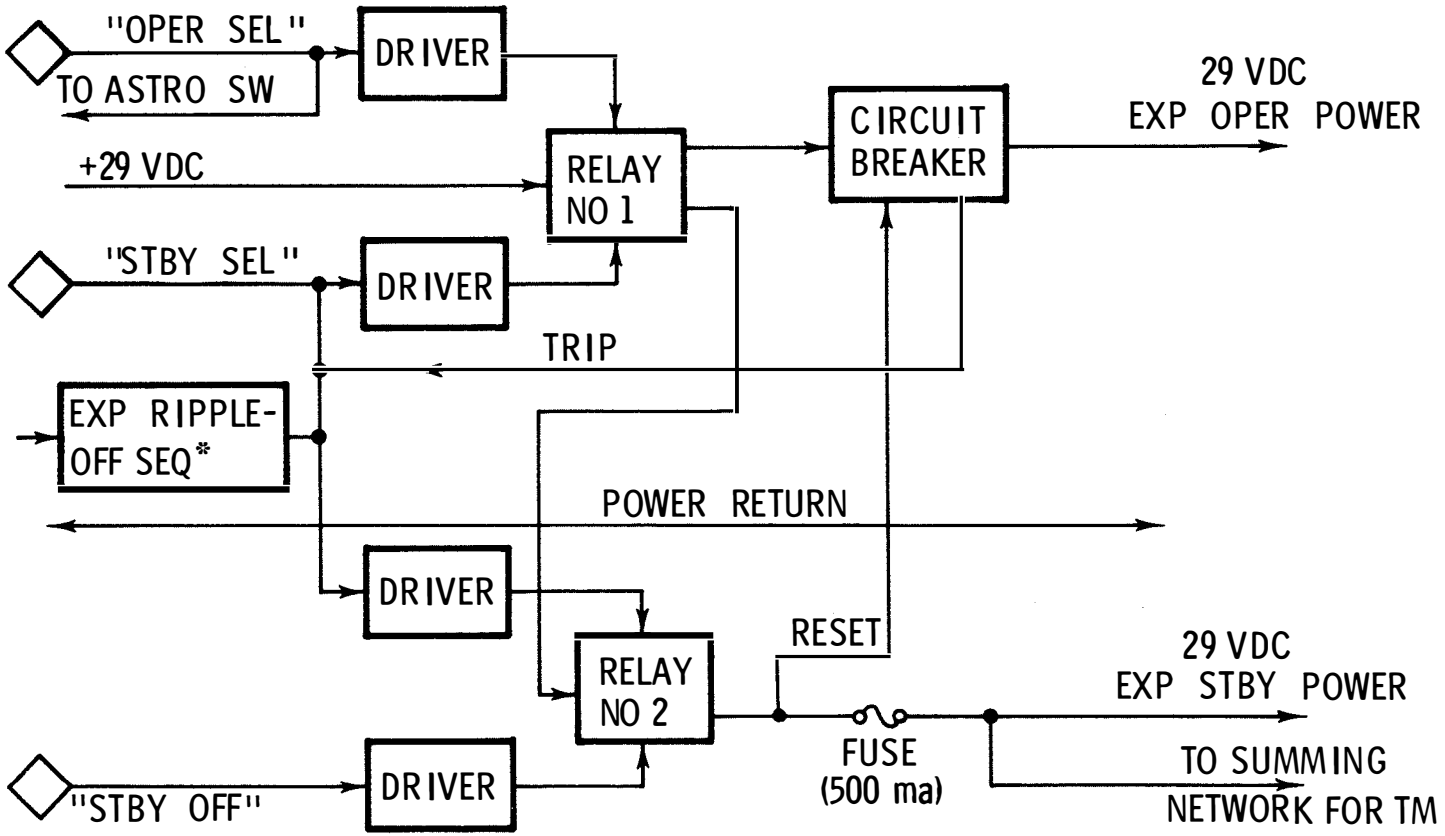

*NOTE: RIPPLE-OFF SEQ USED ON 1, 3 & 4 ONLY

SEPT 68 5178.7.83

EXPERIMENT RIPPLE-OFF SEQUENCE

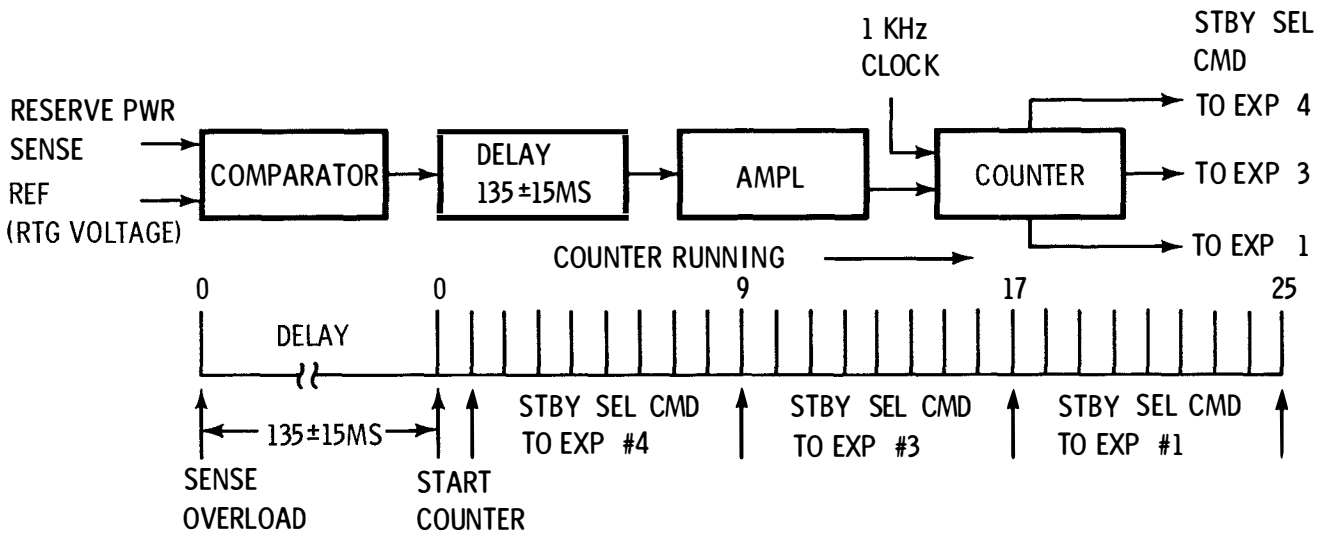

* IF OVERLOAD CONDITION EXISTS FOR 135±15MS, THEN FROM COUNT 1 to COUNT 9 A "STBY SEL" CMD IS ISSUED TO EXP #4.
* AFTER 9MS, IF OVERLOAD STILL EXISTS, A "STBY SEL" CMD IS ISSUED TO EXP #3 FROM COUNT 9 TO COUNT 17.
* IF OVERLOAD STILL EXISTS, A "STBY SEL" CMD IS ISSUED TO EXP #1 FROM COUNT 17 TO COUNT 25.
* WHEN OVERLOAD IS CLEARED THE COUNTER IS RESET AND FURTHER EXPERIMENT SWITCHING IS INHIBITED.

SEPT 68 5178.7.84

EXP PWR MODE TM

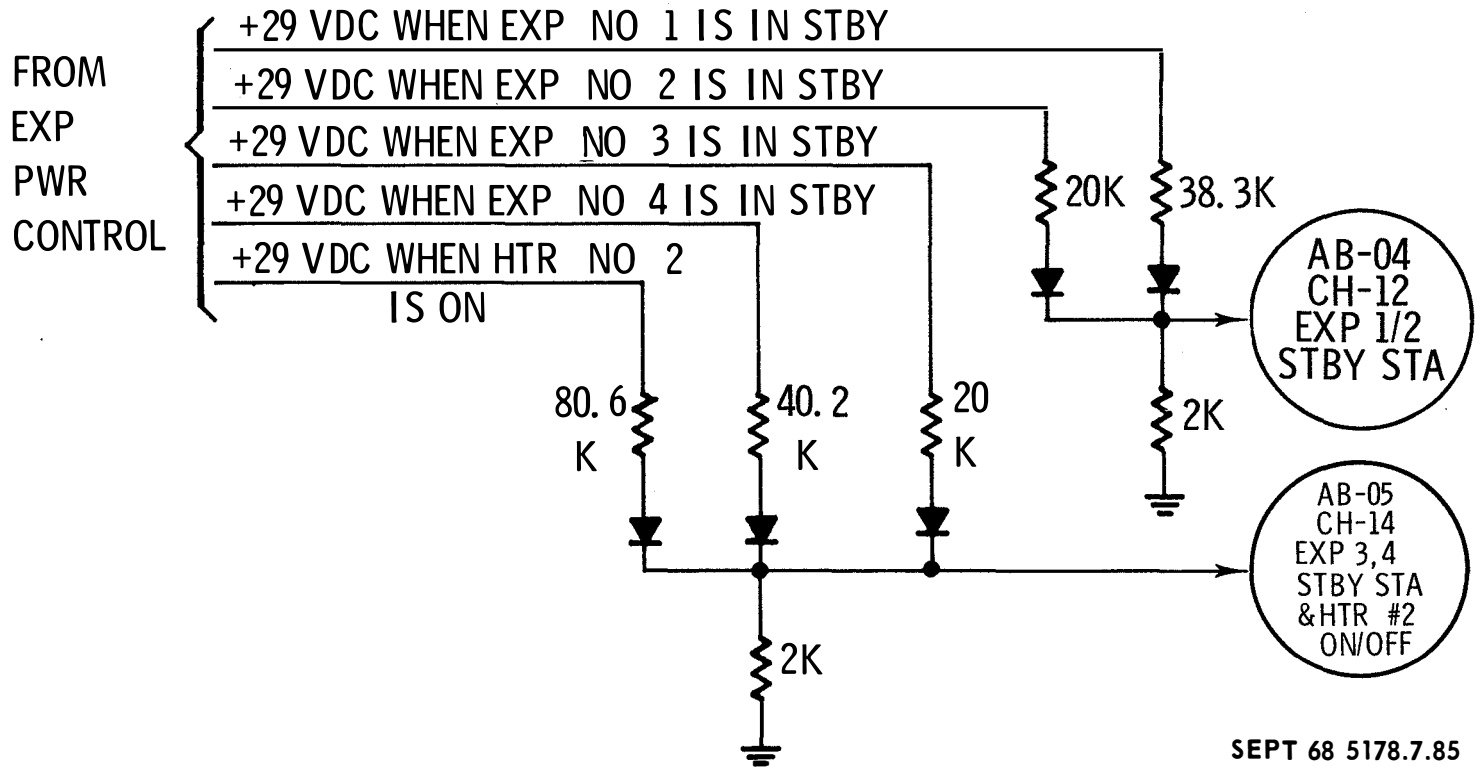

SEPT 68 5178.7.85

TRANSMITTER POWER CONTROL

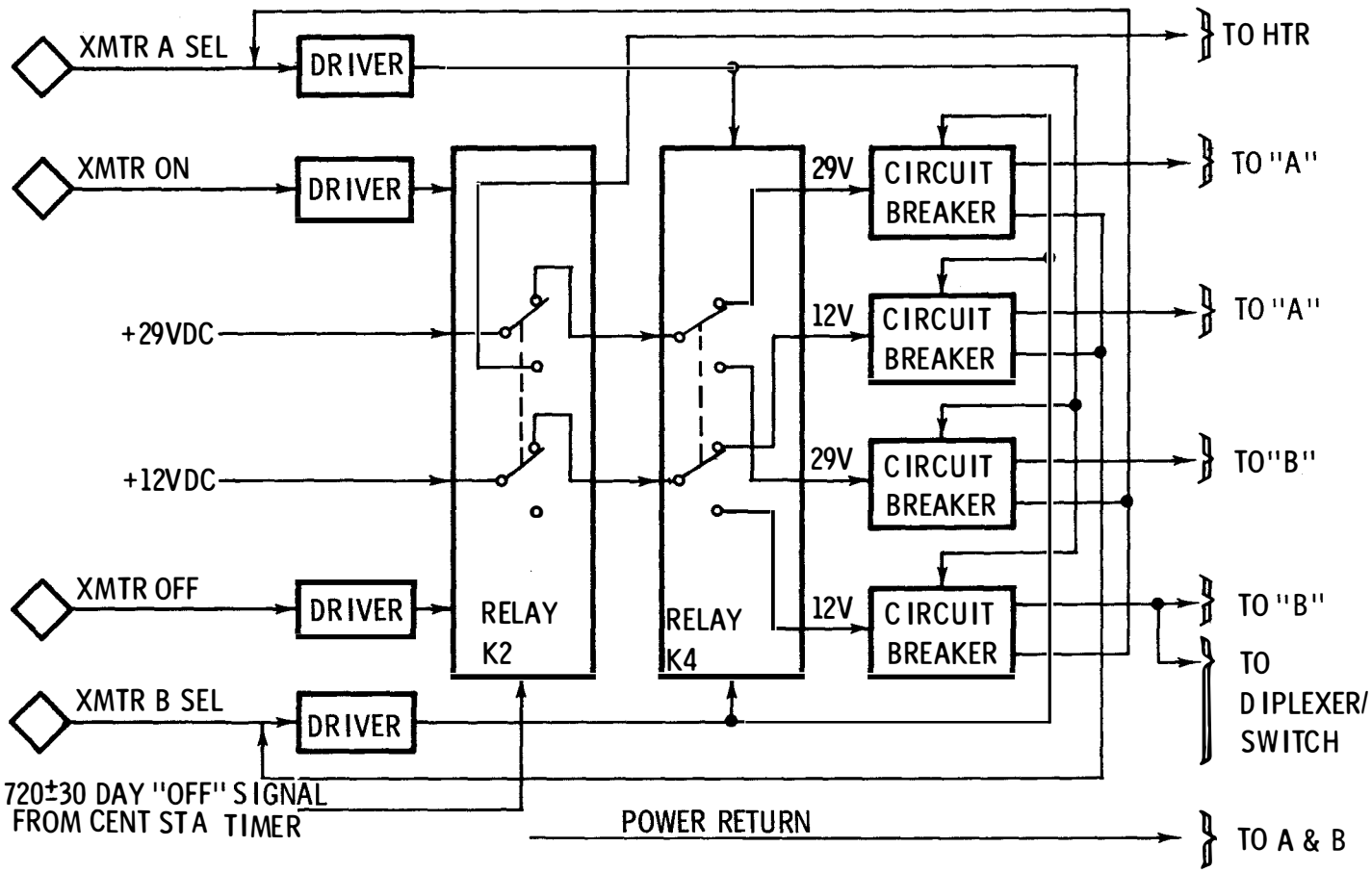

SEPT 68 5178.7.86

DATA PROCESSOR & CMD RCVR PWR CONTROL CKTS

DATA PROCESSOR

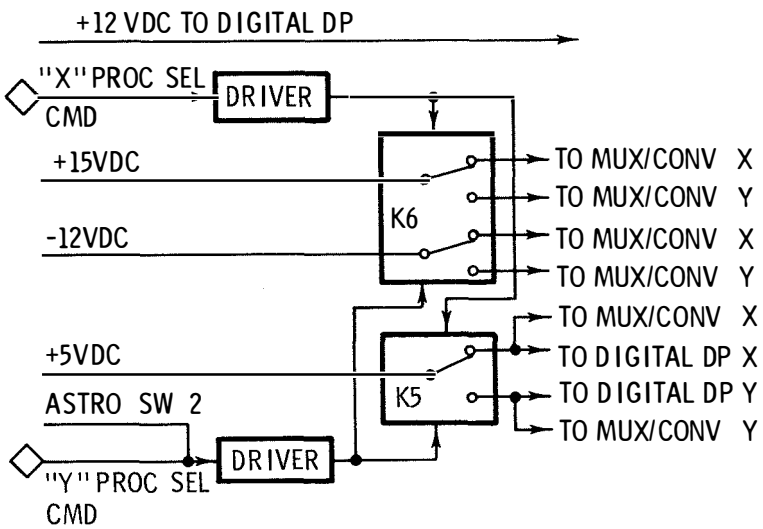

COMMAND RECEIVER

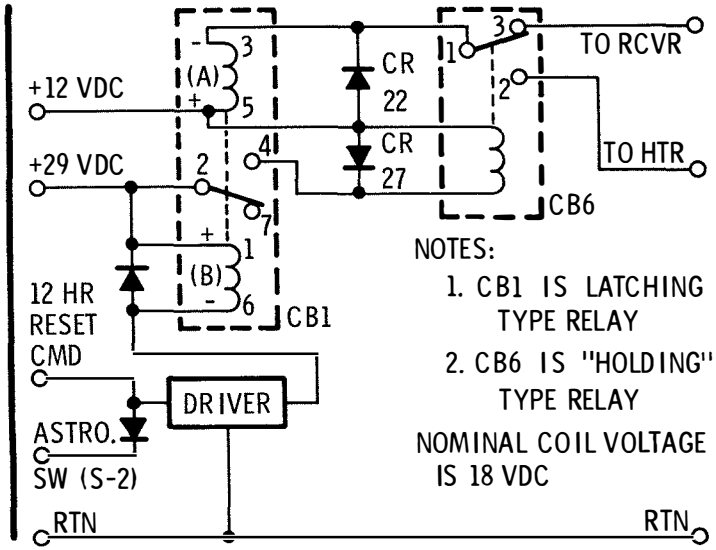

SEPT 68 5178.7.87

SWITCHING FOR POWER DUMP RESISTORS

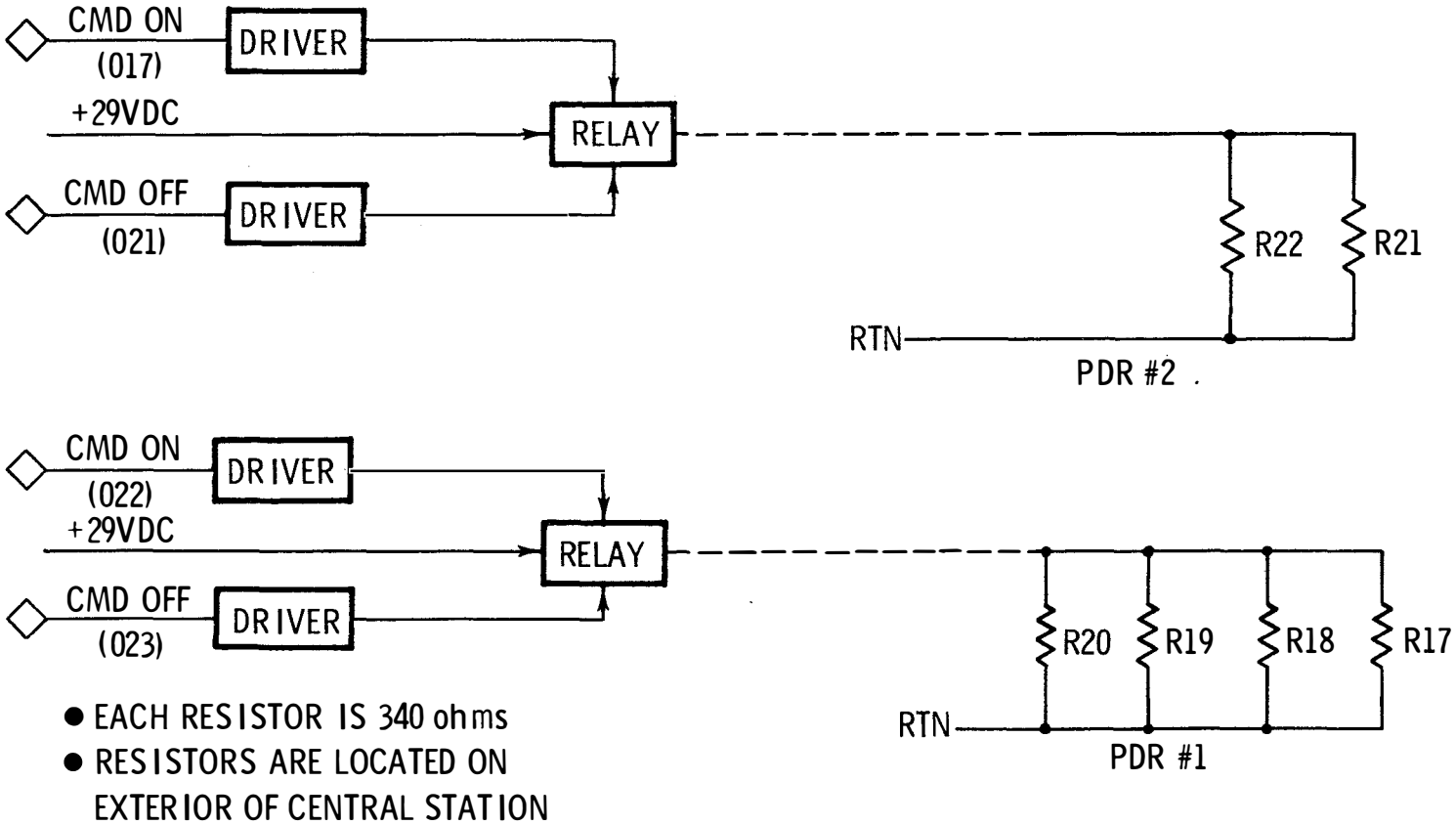

- EACH RESISTOR IS 340 ohms
- RESISTORS ARE LOCATED ON EXTERIOR OF CENTRAL STATION

APR 69 5178.7.88

SWITCHING FOR CENTRAL STA HEATERS

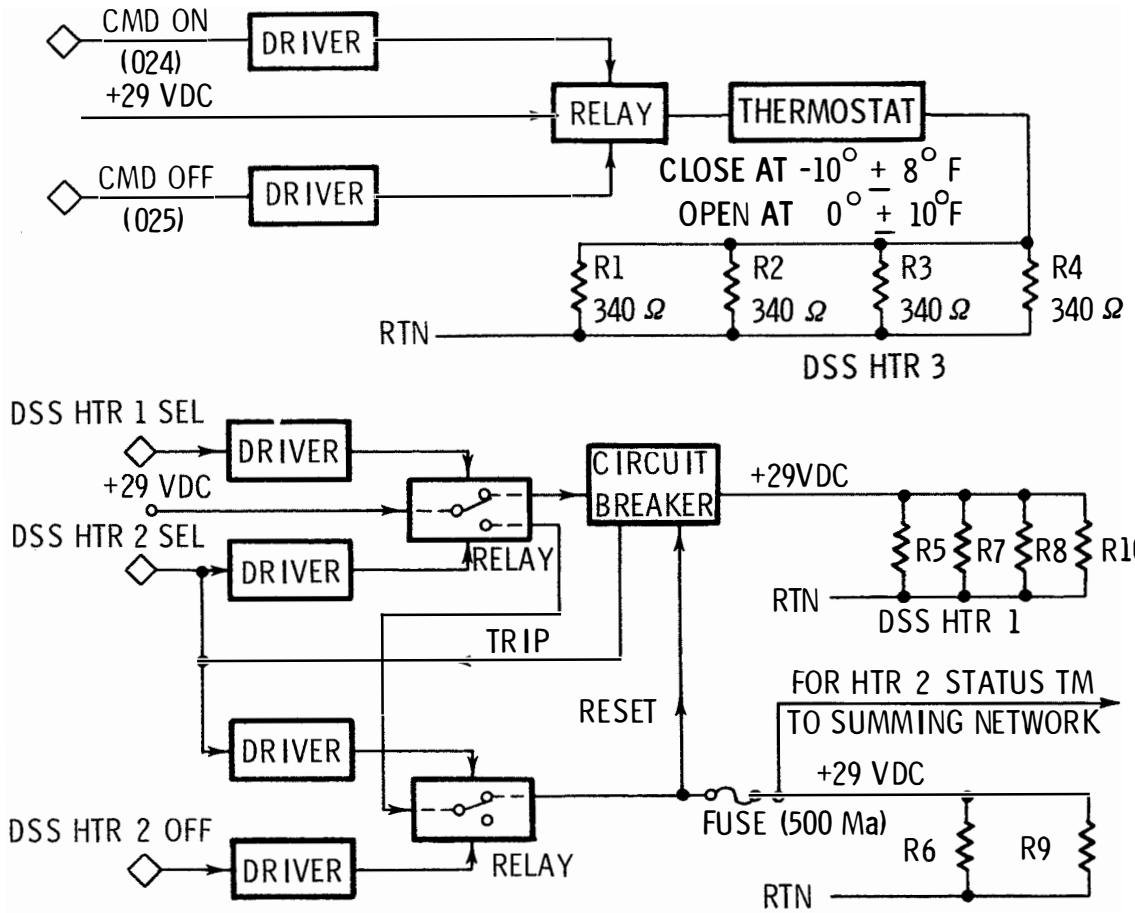

- EACH RESISTOR IS 340 ohms
- RESISTORS ARE MOUNTED ON THERMAL PLATE

SEPT 68 5178.7.89

TELEMETRY SIGNAL CONDITIONING

CHANNEL 62	AT-34	POWER DISTRIBUTION, BASE TEMP
CHANNEL 63	AT-35	POWER DISTRIBUTION, INTERNAL TEMP

THE ABOVE SIGNALS ARE OBTAINED FROM THERMISTORS AND RESISTOR DIVIDERS POWERED BY +12VDC. FOR AT-34, THE THERMISTOR IS LOCATED ON THE BASE PLATE AND FOR AT-35 THE THERMISTOR IS LOCATED ON PCB

CHANNEL 06	AR-01	RTG HOT FRAME #1 TEMP
CHANNEL 37	AR-02	RTG HOT FRAME #2 TEMP
CHANNEL 52	AR-03	RTG HOT FRAME #3 TEMP
CHANNEL 07	AR-04	RTG COLD FRAME #1 TEMP
CHANNEL 67	AR-05	RTG COLD FRAME #2 TEMP
CHANNEL 82	AR-06	RTG COLD FRAME #3 TEMP

THE ABOVE TELEMETRY SIGNALS ARE OBTAINED FROM PLATINUM WIRE SENSORS LOCATED IN THE RTG. THESE SENSORS ARE CONNECTED INTO A BRIDGE CIRCUIT LOCATED IN THE PDU. THE BRIDGE OUTPUT IS AMPLIFIED BY A LINEAR DEVICE TO GIVE AN ACCURATE TM VOLTAGE

PDU TELEMETRY CIRCUITS

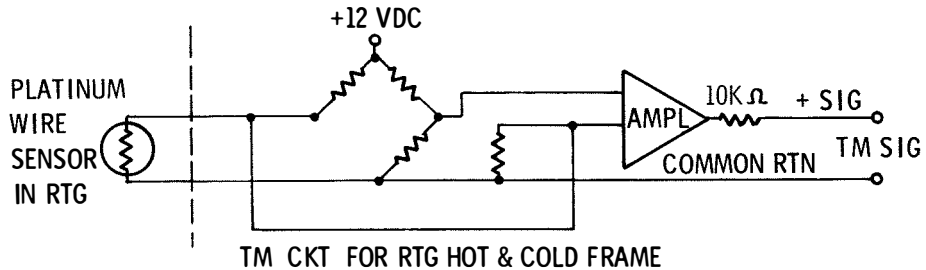

TM CKT FOR RTG HOT & COLD FRAME

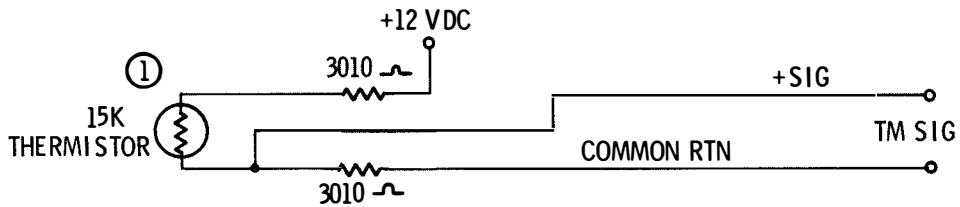

TM CKT "INTERNAL" TEMPERATURES

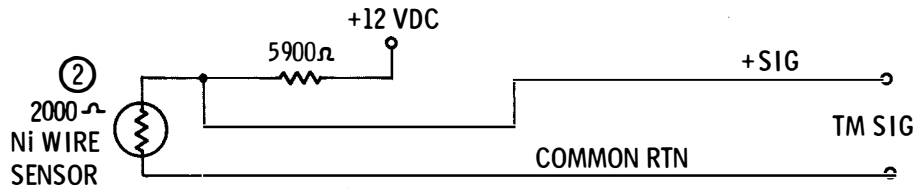

TM CKT FOR STRUCTURE TEMPERATURES

(1) FENWAL ISO-CURVE THERMISTOR - 15K OHMS
(2) TYLAN FG-108 NICKEL WIRE SENSOR - 2000 OHMS

SEPT 68 5178.7.91

TELEMETRY SIGNAL CONDITIONING

THE PDU PROVIDES THE +12 VOLT SUPPLY AND ONE 3010 OHM SERIES RESISTOR FOR EACH OF THE FOLLOWING TM MEASUREMENTS:

CHANNEL 04	AT-03	THERMAL PLATE 1
CHANNEL 28	AT-04	THERMAL PLATE 2
CHANNEL 43	AT-05	THERMAL PLATE 3
CHANNEL 58	AT-06	THERMAL PLATE 4
CHANNEL 71	AT-07	THERMAL PLATE 5
CHANNEL 48	AT-31	COMMAND DECODER BASE TEMP
CHANNEL 49	AT-32	COMMAND DECODER INTERNAL TEMP
CHANNEL 61	AT-33	COMMAND DEMODULATOR, VCO TEMP
CHANNEL 46	AT-29	DIGITAL DP, BASE TEMP
CHANNEL 47	AT-30	DIGITAL DP, INTERNAL TEMP

TELEMETRY SIGNAL CONDITIONING

THE PDU PROVIDES +12 VOLTS AND ONE 5900 OHM RESISTOR, IN SERIES WITH THE EXTERNALLY LOCATED 2000 OHM NICKEL WIRE SENSOR, FOR EACH OF THE FOLLOWING TM MEASUREMENTS:

CHANNEL 27	AT-01	SUNSHIELD TEMP 1
CHANNEL 42	AT-02	SUNSHIELD TEMP 2
CHANNEL 59	AT-08	LEFT SIDE STRUCTURE TEMP W1
CHANNEL 87	AT-09	RIGHT SIDE STRUCTURE TEMP W2
CHANNEL 15	AT-10	BOTTOM STRUCTURE TEMP B1
CHANNEL 88	AT-11	BACK STRUCTURE TEMP W3
CHANNEL 60	AT-12	INSULATION INNER TEMP
CHANNEL 72	AT-13	INSULATION OUTER TEMP

MISCELLANEOUS ITEMS

- CENTRAL STATION TIMER
- ASTRONAUT BACK-UP SWITCHES
- WIRE HARNESS

CENTRAL STATION TIMER

- THE CST IS AN ACCUTRON MECHANISM OBTAINED FROM THE BULOVA WATCH CO.
- A TUNING FORK IS USED TO ACCURATELY CONTROL SWITCH CLOSURE TIME
- SIZE: 1.32 x 1.32 x 2.63 INCHES
- WEIGHT: 0.265 POUNDS
- POWER IS PROVIDED BY A SEPARATE BATTERY
- TWO MODES OF OPERATION ARE PROVIDED-
  - "STOP MODE" - POWER IS APPLIED AND FORK IS OSCILLATING AT LOW LEVEL - ROTARY MOTION IS NOT PRODUCED. MAXIMUM CURRENT IS 7 MICROAMPERES. THIS MODE IS USED FROM FINAL TEST UNTIL DEPLOYMENT ON THE LUNAR SURFACE
  - "START MODE" - ADDITIONAL POWER IS APPLIED FOR INCREASED AMPLITUDE OF FORK OSCILLATION. ROTARY MOTION IS PRODUCED TO DRIVE THE SWITCH MECHANISM. MAXIMUM CURRENT IS 12 MICROAMPERES

SEPT 68 5178.7.95

TIMER AND BATTERY

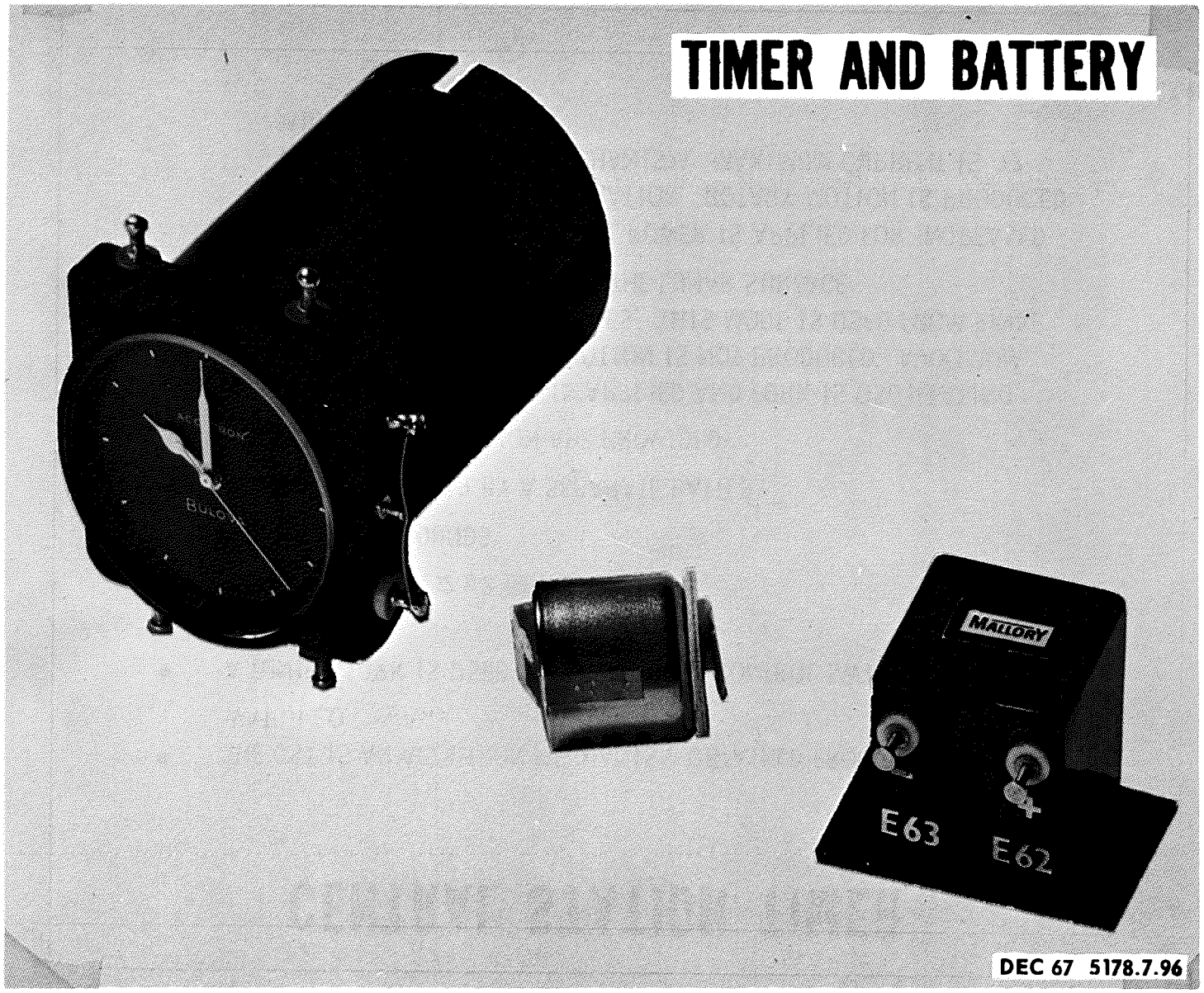

DEC 67 5178.7.96

CENTRAL STA TIMER MECHANISM

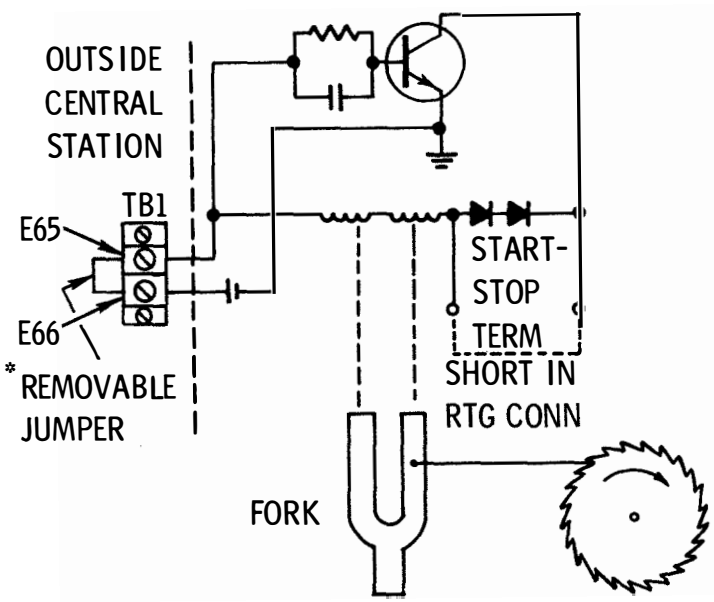

ACCUTRON
MOVEMENT

CONVERT TO
ROTARY MOTION &
DRIVE SWITCH
MECHANISM

*JUMPER IS REMOVED AND 360 Hz SIGNAL
APPLIED TO START FORK.

1 MIN SW ACTION PRODUCED
BY SINGLE SEGMENT COMMUTATOR

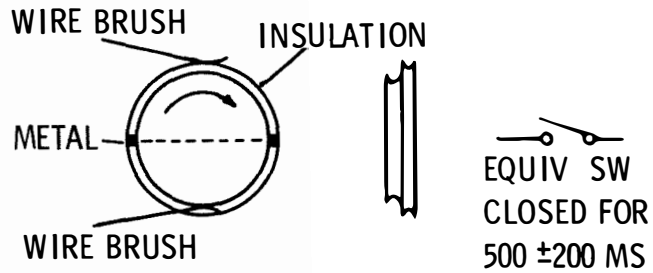

12 HR SWITCH IS PRODUCED
SNAP ACTION MECHANISM

720 ±30 DAY SWITCH

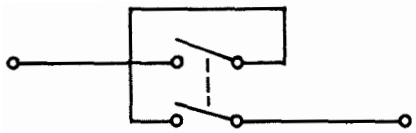

SEPT 68 5178.7.97

CENT STA TIMER BATTERY

- CONSISTS OF A P.R. MALLORY ZINC-MERCURIC-OXIDE, TYPE RMCC1W CELL, IN A SPECIAL PACKAGE FOR ALSEP. BASIC CELL IS CALLED "PACER"
- INITIAL TERMINAL VOLTAGE IS 1.5 VOLTS MAXIMUM
- MINIMUM CELL CAPACITY IS 750 MILLIAMPERE HOURS
- CELL CAPACITY IS DERATED TO 375 MILLIAMPERE HOURS FOR ALSEP
- CELL CAPACITY IS GUARANTEED AFTER STORAGE (OPEN CIRCUIT) FOR UP TO 2 YEARS
- OPERATING TEMPERATURE IS -27 to +162^{0}F

SEPT 68 5178.7.98

ASTRONAUT SWITCHES

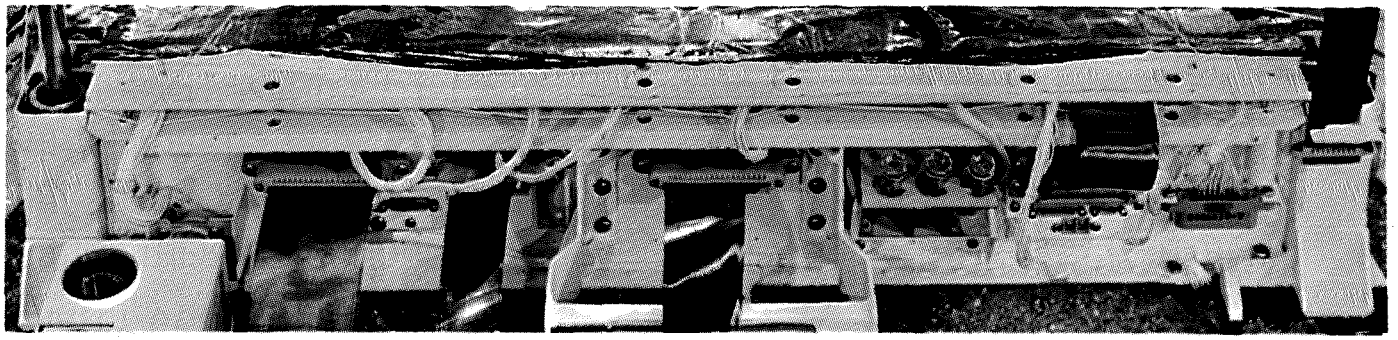

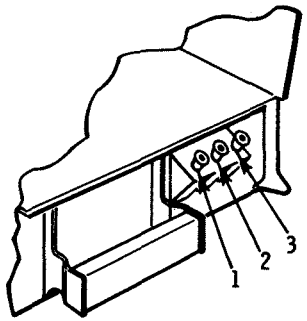

- SWITCHES INTERFACE WITH UHT
- ALL SWITCHES ROT CW
- VISUAL INDICATORS SHOW SWITCH POS

SWITCH NUMBER	QTY/TYPE/ROT	FUNCTION
1	1/SPST/180° NON-MOMENTARY	DISABLES THE HOLD-OFF CIRCUIT. MUST BE OPERATED BY THE ASTRONAUT
2	1/SPST/180° MOMENTARY	(A) TURN XMTR B ON (B) TURN DATA PROCESSOR Y ON (C) RESET RCVR
3	4/SPST/270° MOMENTARY	MECHANICALLY GANGED & OPERATED SEQUENTIALLY TO ACTIVATE EXPER OPER SEL POWER SWITCHES (IN 1, 2, 4, 3 ORDER) AT ≈ 0.1 SEC INTERVALS

ALSEP 4 INCLUDES THE ASE; HAS 2 ADDITIONAL:

BACKUP	4	(A) ACTIVATE ASE OPER SEL POWER SWITCH (NOT INC ON SW #3) (B) SWITCH DATA PROCESSOR TO ASE HBR ON
OPERATIONAL	5	(A) ACTIVATE ASE STBY SEL POWER SWITCH (B) SWITCH DATA PROCESSOR TO ASE HBR OFF (RETURN TO NORM BIT RT) (C) ACTIVATE SWITCH TO INTERRUPT ASE 29 V OPER PWR LINE; SAFETY FEATURE REDUNDANT WITH (A)

NOV 68 5178.7.99

WIRE HARNESS

- ALL COMPONENTS ARE INTERCONNECTED WITH A PRE-FORMED WIRE HARNESS WHICH PROVIDES THE PROPER MATING PLUGS
- WITHIN THE THERMALLY CONTROLLED AREA, AWG# 24 SINGLE CONDUCTOR, STRANDED, COPPER WIRE IS USED
- TWO PRINTED CIRCUIT TERMINAL BOARDS ARE USED TO PERMIT TRANSITION FROM COPPER TO MANGANIN FOR WIRES WHICH MUST GO OUTSIDE THE THERMALLY CONTROLLED AREA
- TO REDUCE THERMAL CONDUCTION, MANGANIN WIRE, WHICH HAS A THERMAL CONDUCTIVITY ABOUT 1/17 THAT OF COPPER, IS USED BETWEEN THE PC TERMINAL BOARDS AND EXTERNAL INTERFACES (CONNECTORS). BECAUSE OF THE HIGH CURRENT, + AND - WIRES TO THE RTG CONNECTOR ARE COPPER
- CONNECTORS USED ARE MADE BY HUGHES, SCHJELDAHL, DEUSTCH AND MICRODOT

HARNESS TO EXTERNAL CONNECTORS

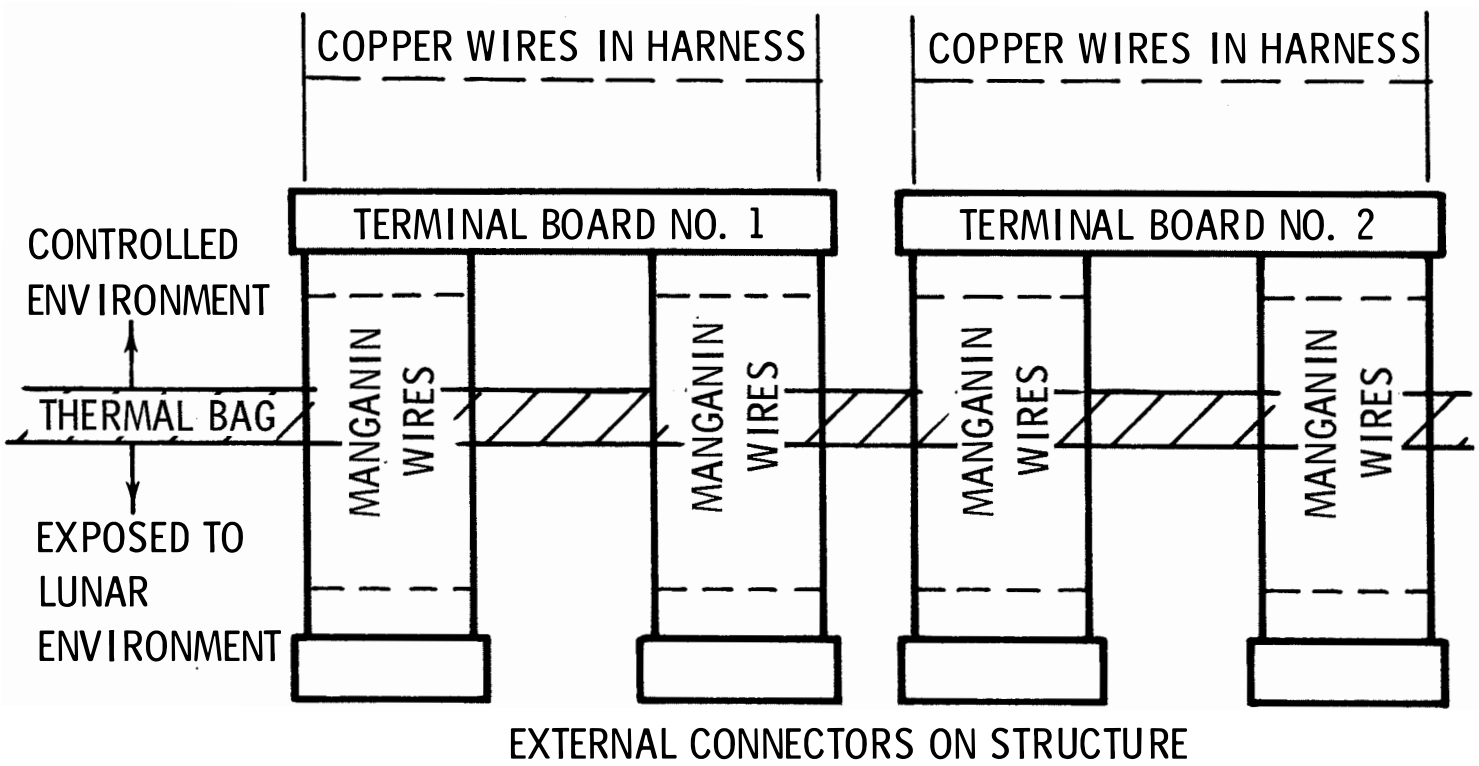

DEC 67 5178.7.101

PASSIVE SEISMIC EXPERIMENT

- COMPONENTS & FUNCTION
- DEPLOYMENT
- COMMANDS & DATA

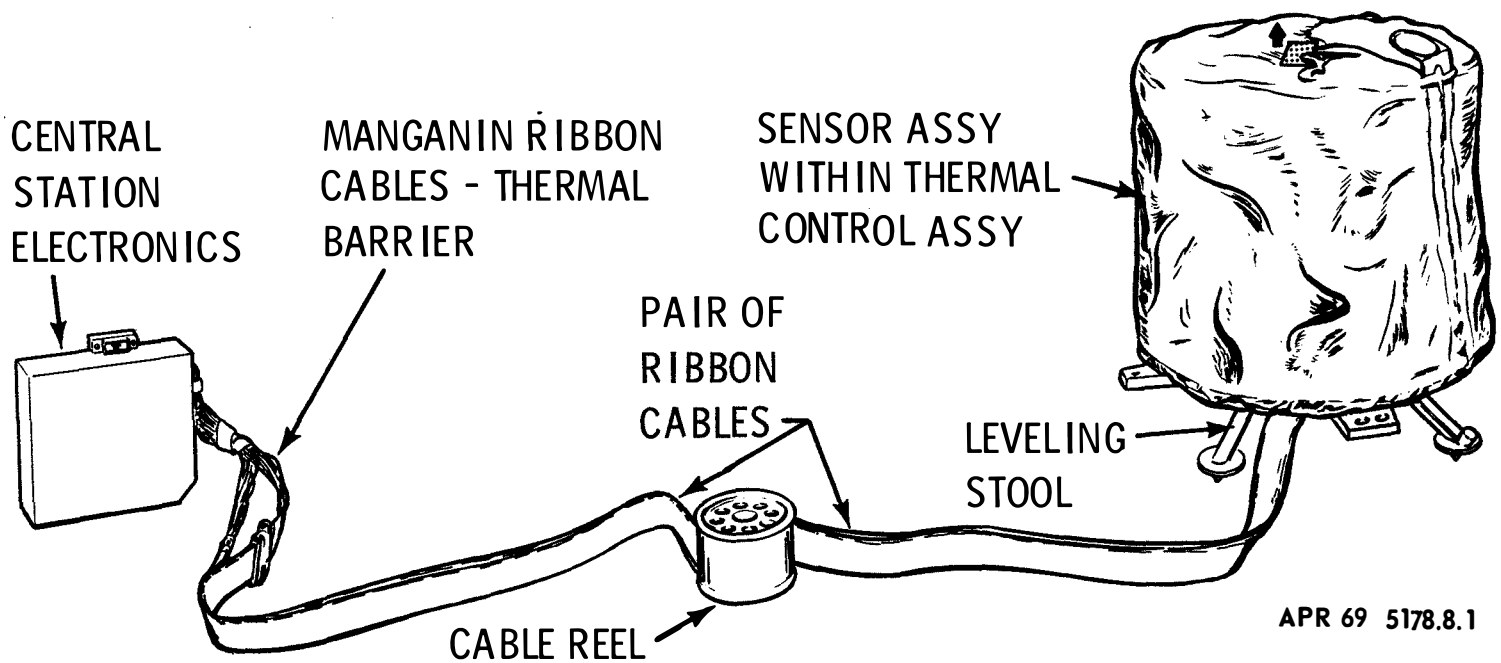

INSTRUMENT DETAILS

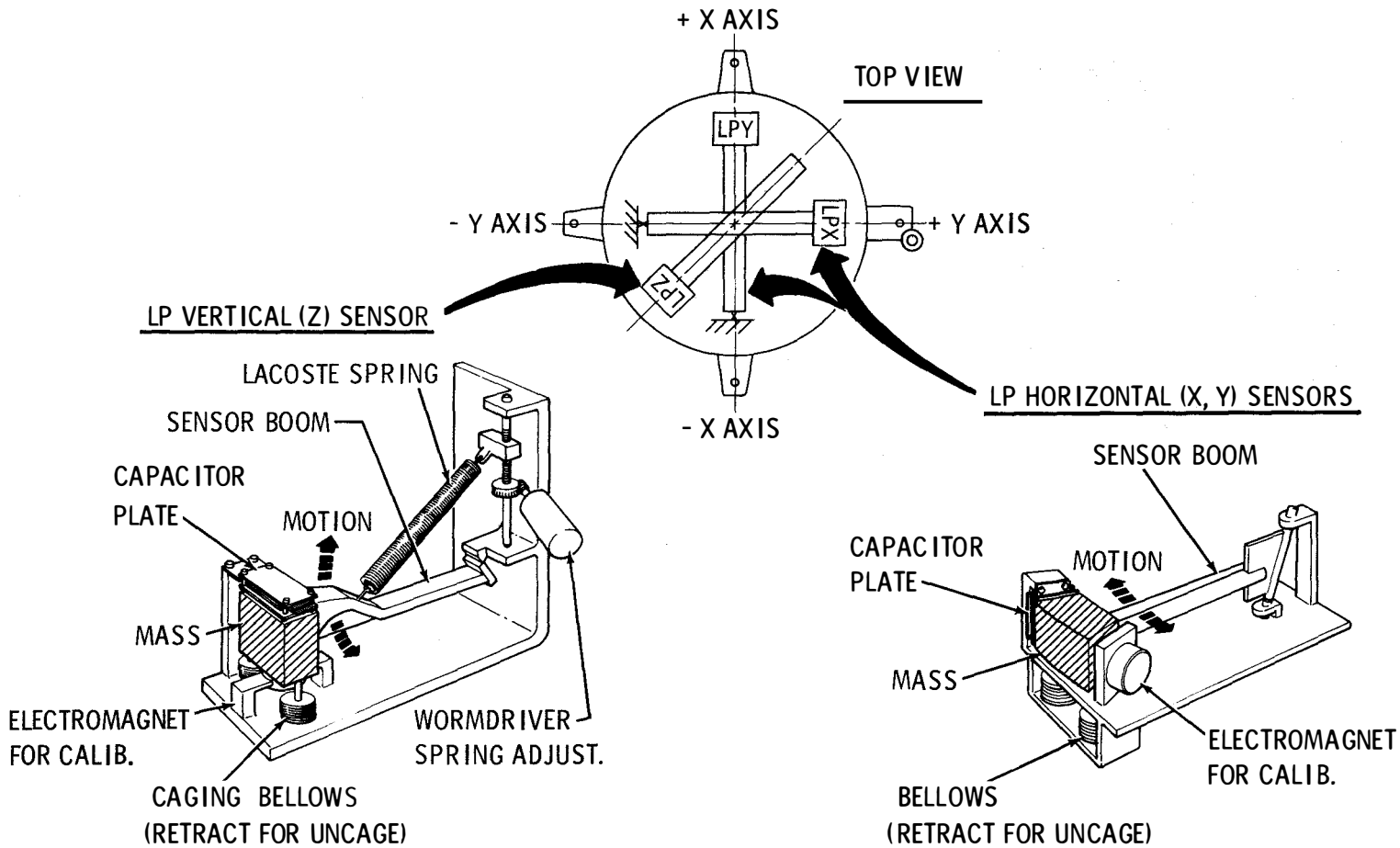

APR 69 5178.8.2

PSE FUNCTIONAL BLOCK DIAGRAM

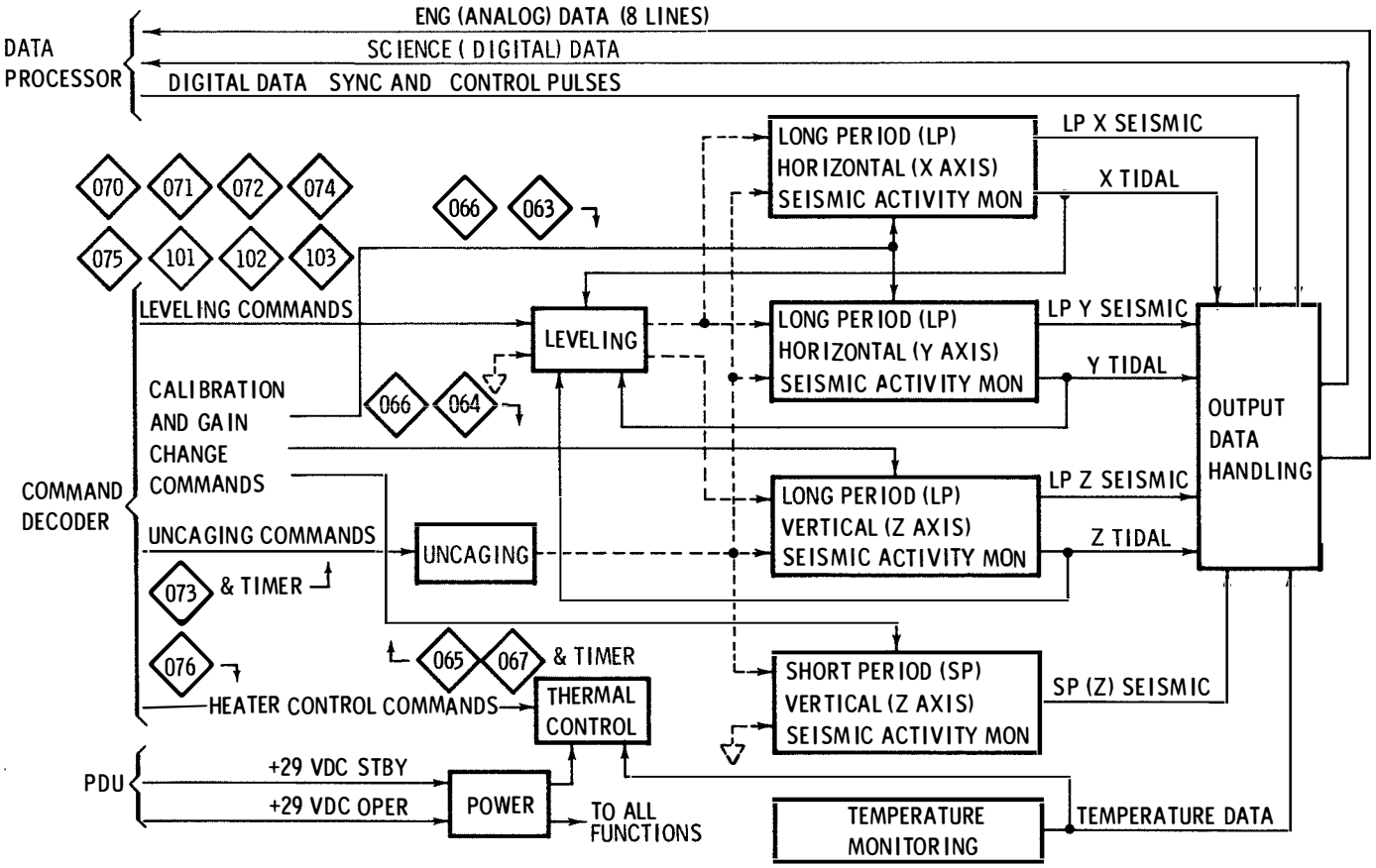

SEPT 68 5178.8.3

LONG PERIOD (LP) SEISMIC FUNCTION

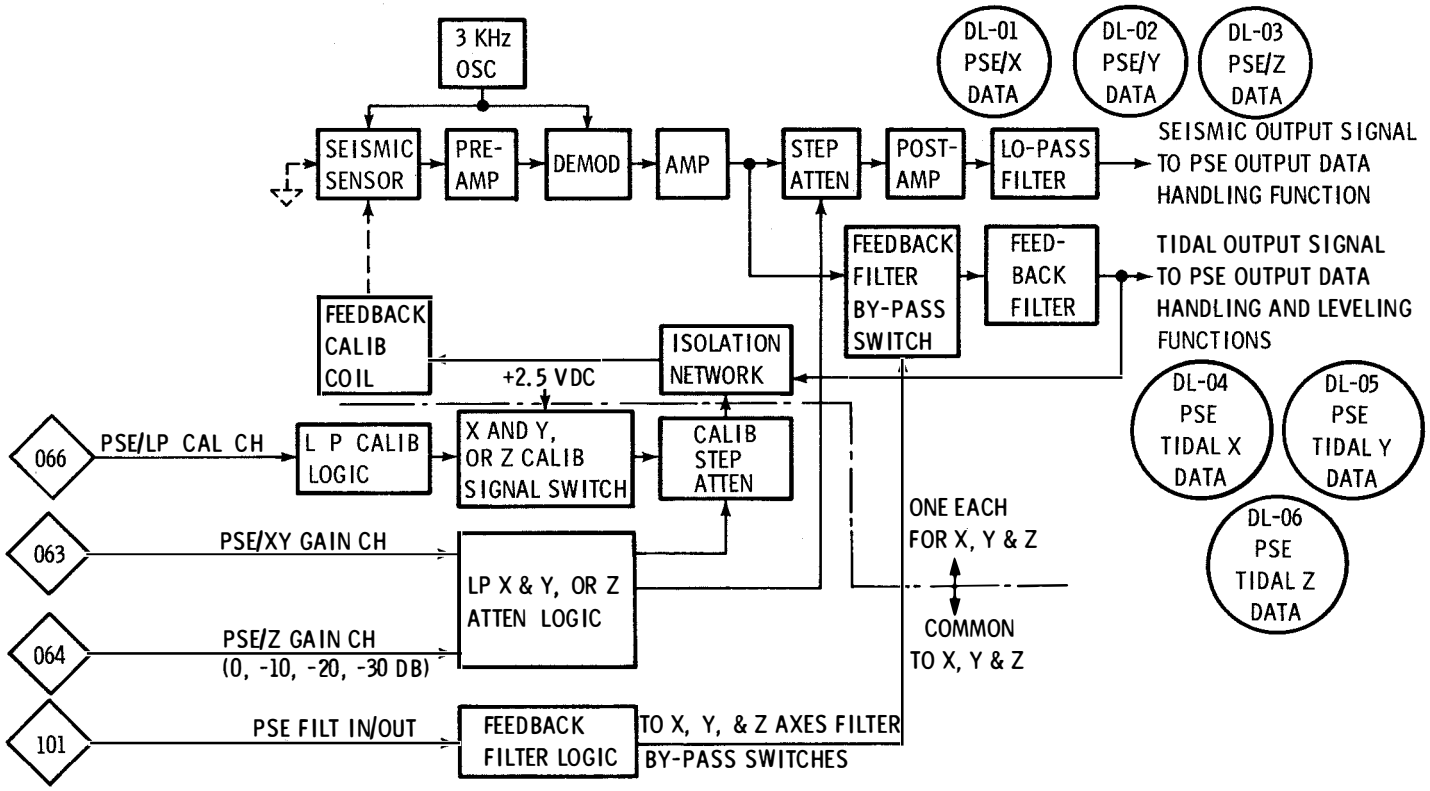

DEC 67 5178.8.4

SHORT PERIOD (SP) SEISMIC FUNCTION

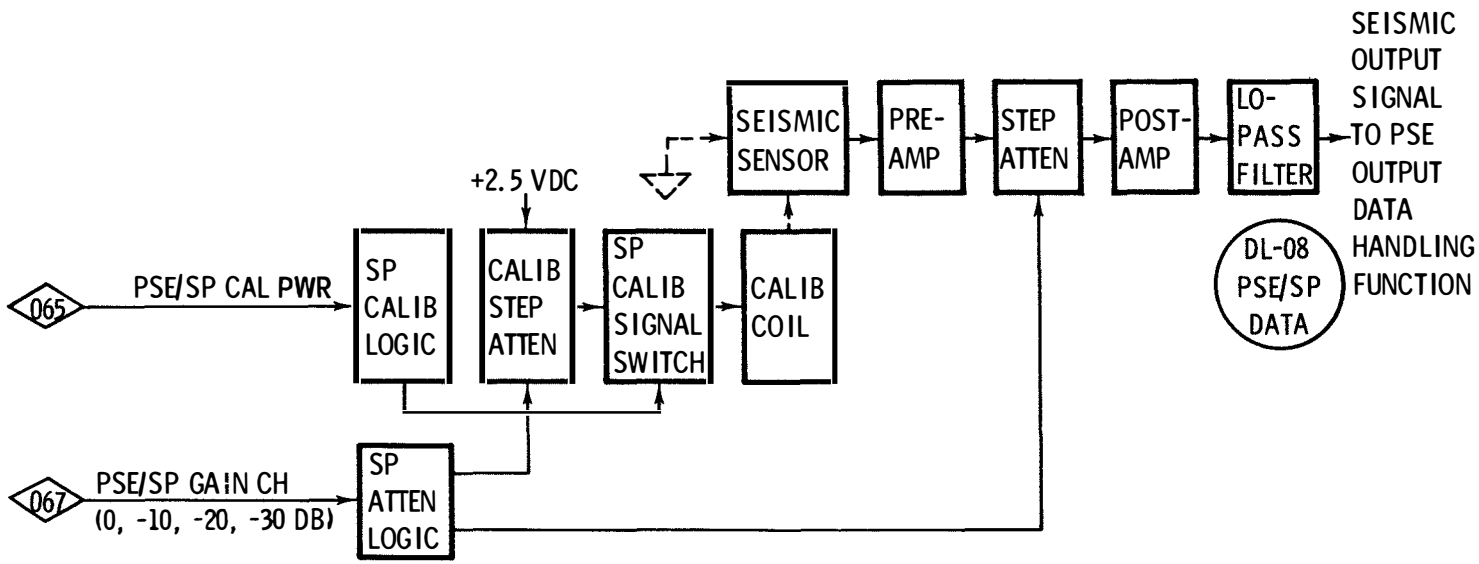

DEC 67 5178.8.5

DATA HANDLING FUNCTION

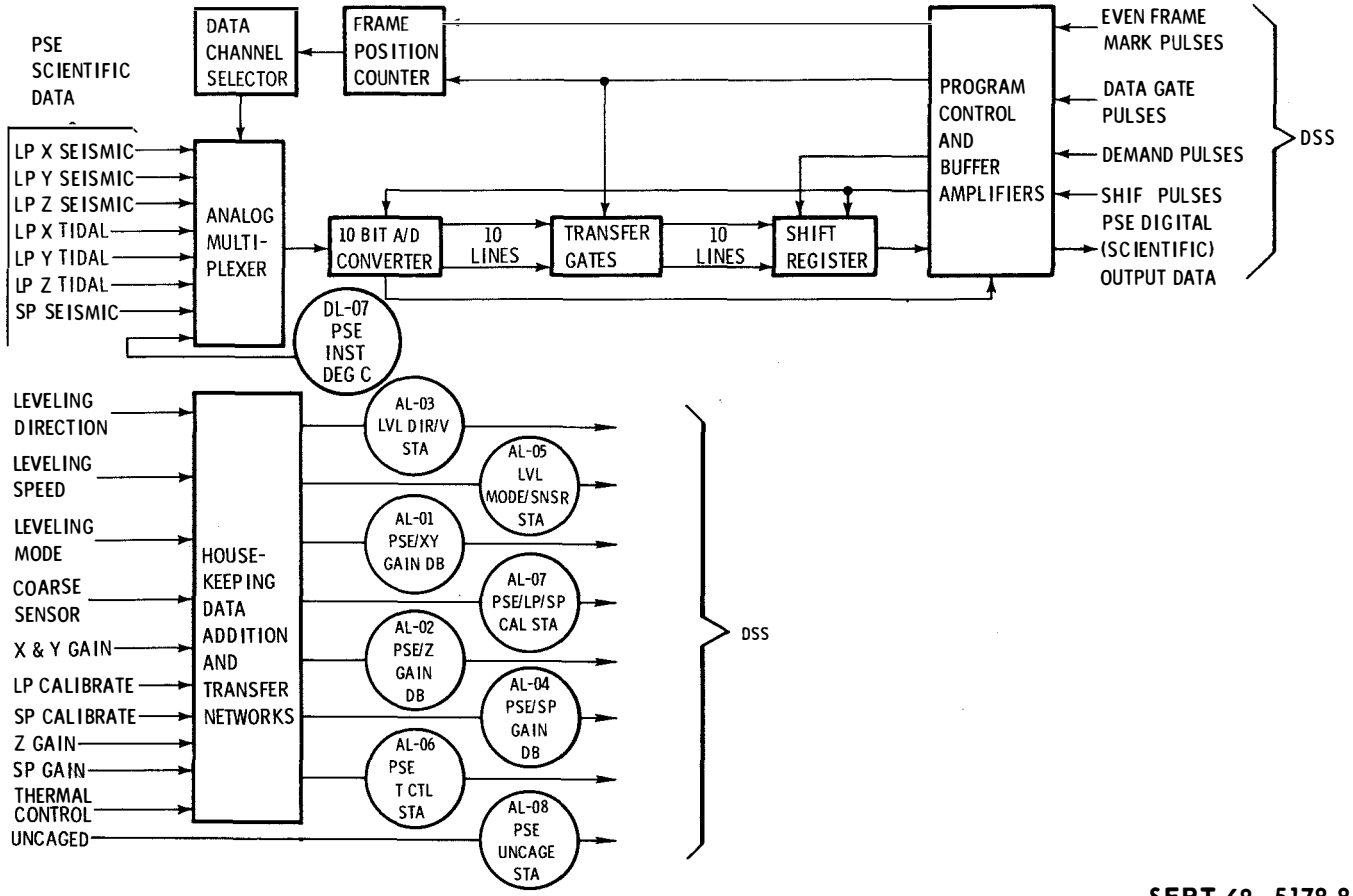

SEPT 68 5178.8.6

UNCAGING AND LEVELING FUNCTION

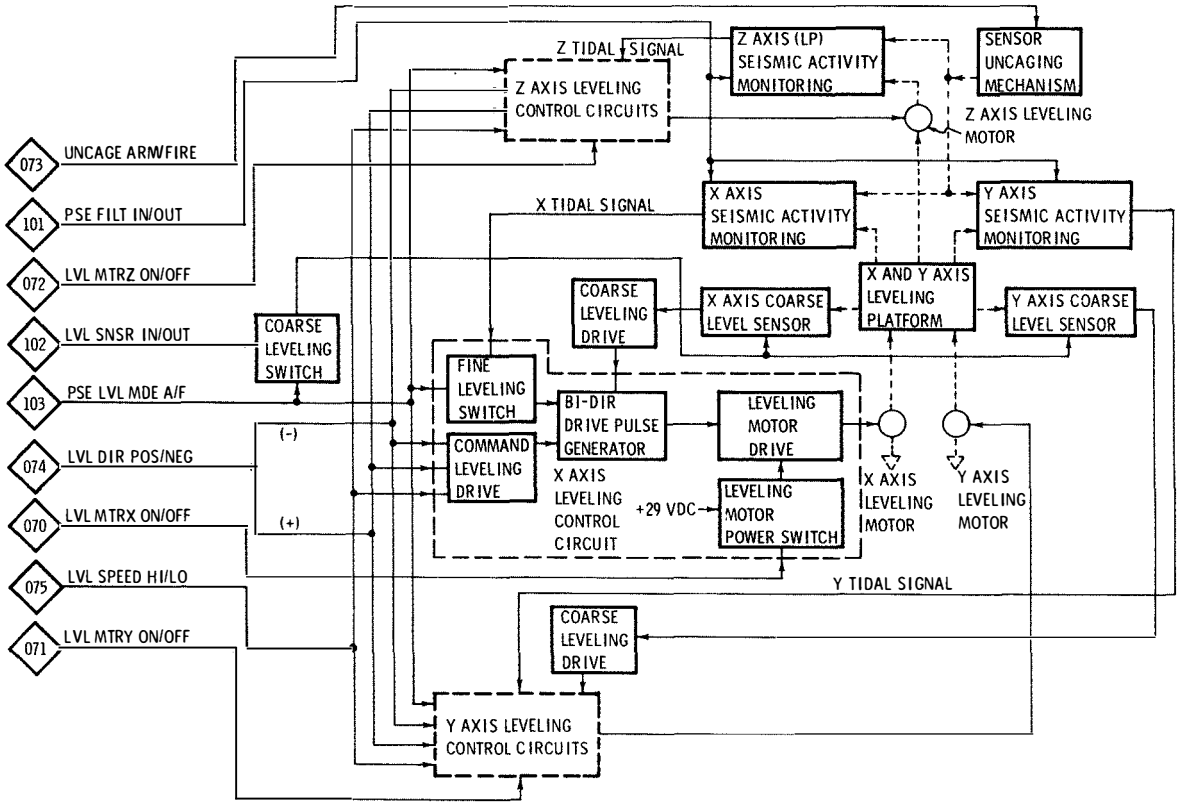

SEPT 68 5178.8.7

PSE THERMAL CONTROL

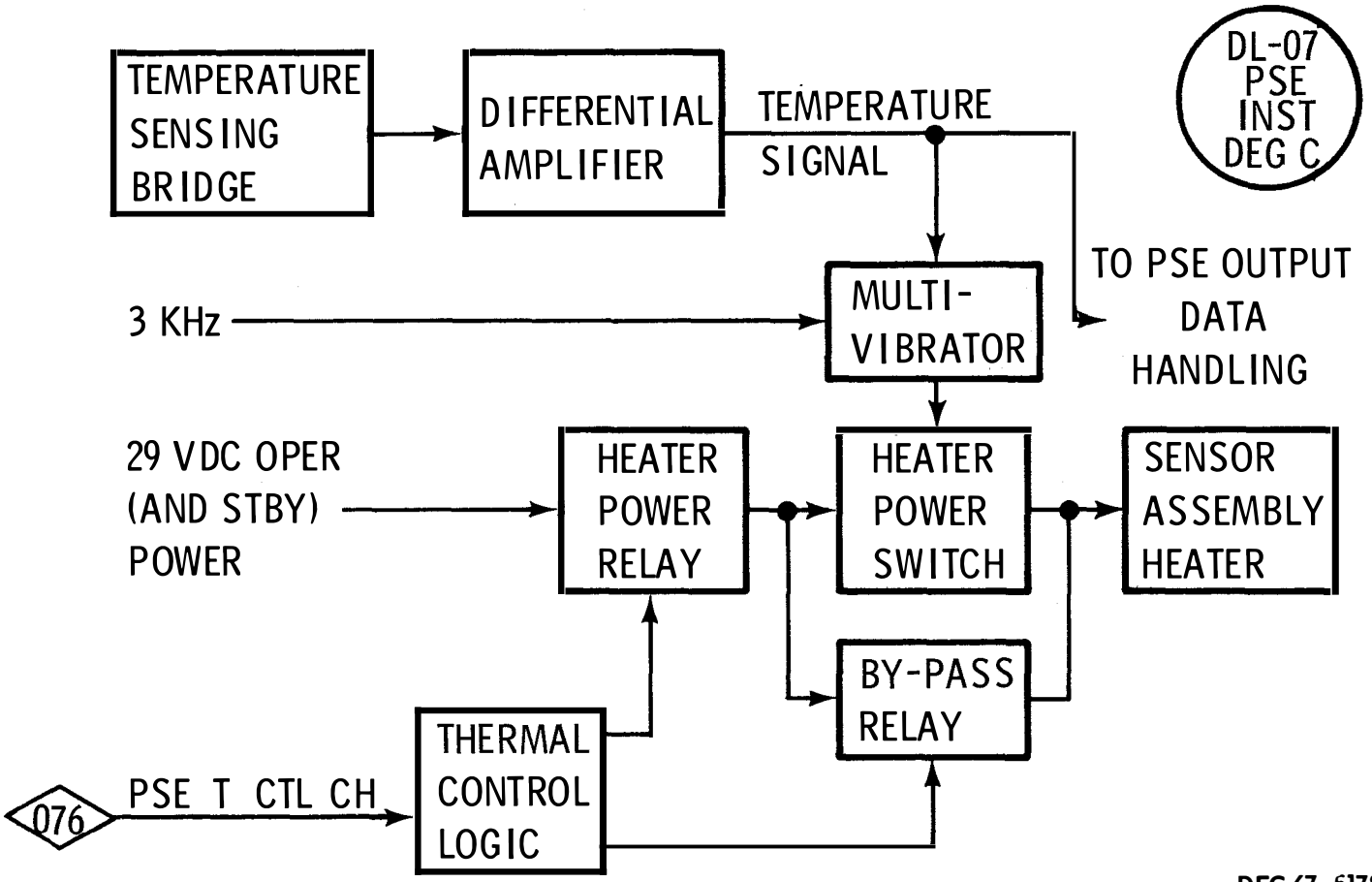

DEC 67 5178.8.8

PSE TIMING

TIMING PULSES PROVIDED BY DSS FOR SYNCHRONIZATION AND DATA CONTROL

PULSE	SUBFUNCTION
EVEN FRAME MARK	PROGRAM CONTROL, FRAME POSITION COUNTER, DATA CHANNEL SELECTOR
DATA DEMAND	ALLOWS DATA SHIFT OUT TO DSS
DATA GATE	INDICATES INDIVIDUAL WORDS WITHIN A DATA DEMAND PULSE OF MULTIPLE WORD LENGTH
SHIFT PULSE	TIMING FOR DATA SHIFT-OUT

NOTE: TIMING DOES NOT AFFECT THE PSE POWER PROFILE.

PSE POWER PROFILE

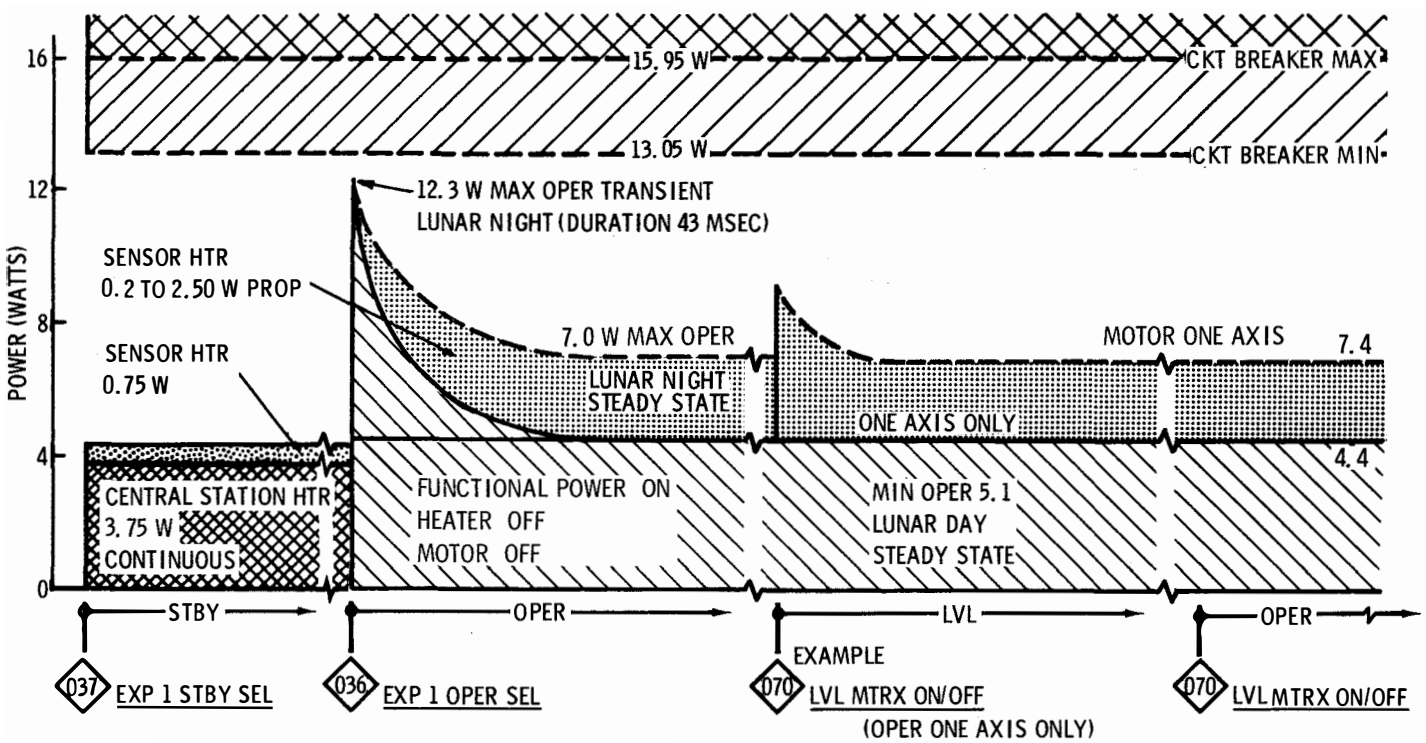

APR 69 5178.8.10

PSE TIE-DOWN

RELEASE 4 FASTENERS

INSERT UHT

LIFT EXPERIMENT

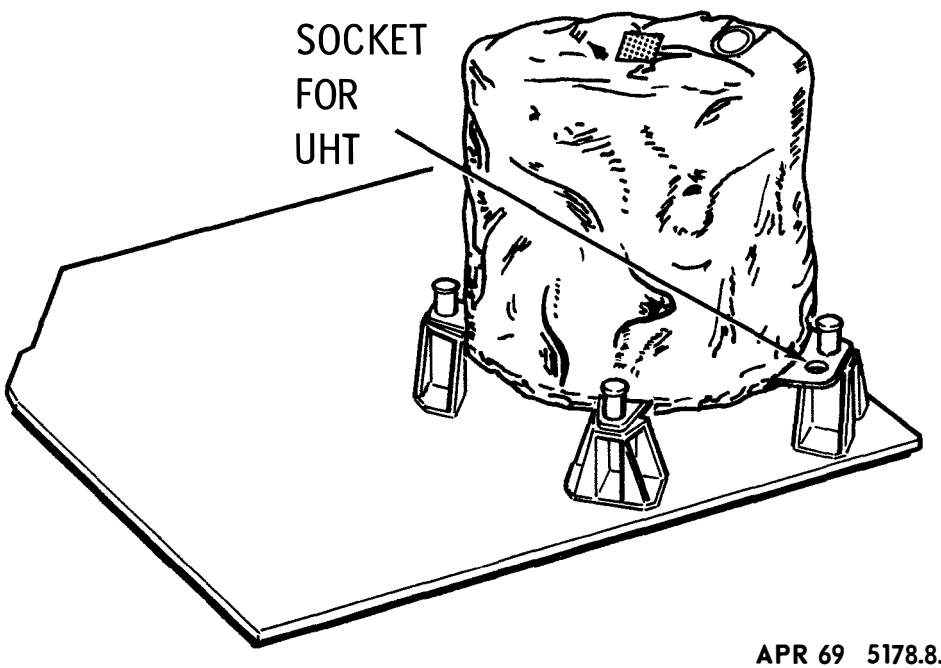

APR 69 5178.8.11

PSE EMPLACEMENT CRITERIA

PARAMETER	REQUIREMENT	PRIORITY	INDICATOR	COMMENTS
DISTANCE FROM SUBPACKAGE 1	9 ±1 FT	1	10 FT CABLE	15 FT SEPARATION REQUIREMENT FROM RTG FOR THERMAL REASONS
DIRECTION FROM SUBPACKAGE 1	DUE E OR W*	1	EYEBALL	OUT OF FIELD OF VIEW OF CENTRAL STATION RADIATOR
SITE SELECTION	"QUIET" LOCATION	1	EYEBALL	FREE FROM LOOSE RUBBLE
LEVEL, WRT INDICATOR	±5° OF HORIZONTAL	1	BALL LEVEL	INTERACTS WITH ALIGNMENT; INSTRUMENT FINE-LEVELS INTERNALLY
ROUGH ALIGN	±20° OF E-W	2	ARROW**	BEFORE OPENING SHROUD
READOUT OF ALIGNMENT WRT SHADOW	±5° OF E-W	1	FULL ROSE	AFTER OPENING SHROUD
EXPERIMENT INTERRELATION	*NO LESS THAN 10 FT FROM OTHER SUBSYSTEMS TO MINIMIZE PICKUP OF STRAY VIBRATIONS.			
SPECIAL REQUIREMENTS	**ARROW NOMINALLY POINTS EAST ALTHOUGH SCIENTIFIC OUTPUT DEPENDS ONLY ON KNOWING FINAL ALIGNMENT. FINAL READING IS ACCOMPLISHED WITH ASSISTANCE OF AZIMUTH GNOMEN MOUNTED ON TOP OF THERMAL SHROUD.			

APR 69 5178.8.12

PSE ALIGNMENT MARKINGS

PHASE	CONFIGURATION	TASK	MARKING
INITIAL	CYLINDRICAL SENSOR ASSY INSIDE THERMAL CASE, ENCLOSED IN THERMAL SHROUD WITH GIRDLE OVER SHROUD	ROUGH ALIGN VIA MARKING ON TOP OF GIRDLE (ARROW EAST)	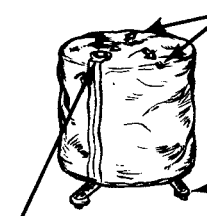
FINAL	SHROUD OPENED & ASSY LEVELED	READOUT VIA SHADOWS WRT COMPASS MARKINGS ON TOP	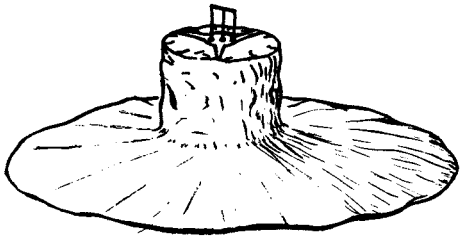

APR 69 5178.8.13

PSE OPERATE MODES

CAGED: PROTECTS EQUIPMENT
PRECEDES OTHER MODES
CANNOT BE RECAGED AFTER UNCAGE

NORM (UNCAGED): DIGITAL SCIENCE DATA (INCLUDING ONE TEMP MEAS FOR DATA INTERPRETATION)
ANALOG ENG DATA

LEVEL: REQUIRED FOR VALID DATA
MAY BE REPEATED
TWO METHODS
- AUTO-SERVO LEVELED
- FORCED-COMMANDED STEPS FROM OBSERVED DATA

NOTE: Z-AXIS "LEVELING" IS ADJUSTMENT OF LACOSTE SPRING

CALIB: THREE DISTINCT FUNCTIONS
- CALIB SP
- CALIB LP X & Y (HORIZ)
- CALIB LPZ

DEC 67 5178.8.14

PSE COMMAND PHILOSOPHY

- COMMANDS ARE INTERRELATED
- LEVELING MODE IS AN EXAMPLE
- ALL THESE CMDs ARE BI-STATE CMDs

	OCTAL CMD	CMD	LEVELING MODE				
			AUTO		FORCED		
			COARSE	FINE	FAST	SLOW	
ORDER OPTIONAL BUT MUST BE SET WITH 070, 071, & 072, OFF	103	LVL MDE A/F	A		F		
	101	FILT IN/OUT	OUT	IN	OUT		
	102	LVL SNSR IN/OUT	IN	OUT	IN	OUT	
	074	LVL DIR POS/NEG	--		POS/NEG		AS REQD
	075	LVL SPEED HI/LO	--		HI	LO	
SEND LAST BUT ONLY ONE ON AT A TIME. X, Y TO PRECEDE Z	070	LVL MTRX ON/OFF	X		X		* INDIVIDUAL MOTORS MUST BE CMD OFF AFTER LEVELING AS EACH CONTINUES TO DRAW POWER
	071	LVL MTRY ON/OFF	Y		Y		
	072	LVL MTRZ ON/OFF	OR Z		OR Z		

* IN FORCED MODE THE LEVEL MOTOR RUNS TO MECH STOP UNLESS CMD OFF

APR 69 5178.8.15

PSE COMMANDS

OCTAL CMD NUMBER — CMD

063 — PSE/XY GAIN CH

SWITCHES DIFFERENT ATTEN INTO LPX & LPY CKTs TO CONTROL GAIN. REPEATED CMD SUCCESSIVELY STEPS ATTEN THRU VALUES OF 0 DB, -10 DB, -20 DB, -30 DB. CMD CONTROLS CAL CURRENT OF LPX & LPY. ATTEN RESET TO -30 DB UPON PSE ACTIVATION

064 — PSE/Z GAIN CH

AFFECTS LPZ CKT SIMILAR TO 063 ABOVE

065 — PSE/SP CAL CH

APPLIES CURRENT THRU SP CAL ATTEN (SELECTED BY CMD 067) TO SP CAL COIL. SP CAL IS ALSO PERFORMED AUTO EVERY 12 HR UNDER TIMER CONTROL (UNLESS INHIBITED BY CMD 033). BY CMD 033). RESET TO OFF UPON PSE ACTIVATION.

066 — PSE/LP CAL CH

APPLIES CURRENT THRU LP CAL ATTEN (SELECTED BY CMD 063 & 064) TO THE LP DAMPING COILS (3 AXES). CMD IS BI-STATE ON/OFF & IS SET TO OFF UPON PSE ACTIVATION

067 — PSE/SP GAIN CH

AFFECTS SP CKT SIMILAR TO 063 ABOVE

070 — LVL MTRX ON/OFF

APPLIES POWER TO X-AXIS DRIVE MOTOR. CMD IS BI-STATE ON/OFF & IS SET TO OFF UPON PSE ACTIVATION. MOTOR CONSUMES POWER UNTIL CMD OFF.
NOTE: ONLY ONE DRIVE MOTOR TO BE ON AT ONE TIME

071 — LVL MTRY ON/OFF

AFFECTS Y-AXIS SIMILAR TO 070 ABOVE

072 — LVL MTRZ ON/OFF

AFFECTS Z-AXIS SIMILAR TO 070 ABOVE BUT ADJUSTS LACOSTE SPRING

NOTE: DO NOT SEND WHILE EXPERIMENT IS CAGED - WILL DESTROY SENSOR.

073 — UNCAGE ARM/FIRE

IRREVERSIBLE FUNCTION NECESSARY TO OBTAIN PSE SCIENTIFIC DATA. FIRST CMD ARMS, SECOND CMD FIRES ACTUATOR UNCAGING ALL SPRING MASS SYTEMS. SUBSEQUENT CMDs WILL ARM AND THEN ATTEMPT FIRE USING PWR WITHOUT AFFECTING CAGE CONDITION. ARM & FIRE ALSO ACCOMPLISHED BY 12 HR TIMER PULSES & BY 96 HR + 2 MIN PULSE FROM DELAYED CMD SEQ, THEREFORE ARM IS ACCOMPLISHED BY CMD 073 OR 12 HR TIMER PULSE OR 96 HR + 2 MIN PULSE AND FIRE (WHEN IN THE ARM STATE) IS ACCOMPLISHED BY THE NEXT CMD 073 OR 12 HR TIMER PULSE OR 96 HR + 2 MIN PULSE.

OCTAL CMD NUMBER — CMD

074 — LVL DIR POS/NEG

REVERSES DIRECTION OF LEVEL MOTORS LPX, LPY, LPZ IN THE FORCED LEVEL MODE. CMD IS BISTATE POS/NEG & IS SET TO POS UPON PSE ACTIVATION.

075 — LVL SPEED HI/LO

CONTROLS SPEED OF LEVEL MOTORS LPX, LPY, LPZ IN THE FORCED LEVEL MODE. CMD IS BISTATE HI/LO & IS SET TO LO UPON PSE ACTIVATION.

076 — PSE T CTL CH

CONTROLS SENSOR HEATERS BY SELECTING OFF, FORCED-ON, OR AUTO MODES, 4-STATE CMD IS SET TO AUTO-ON UPON PSE ACTIVATION. SUCCESSIVE CMD STEPS THRU MODES IN THIS SEQUENCE:

AUTO-OFF	+29 VDC DISCONNECTED FROM HEATER
FORCED-ON	+29 VDC CONNECTED TO HEATER, AUTO THERMOSTAT CONTROL BYPASSED
FORCED-OFF	+29 VDC DISCONNECTED FROM HEATER
AUTO-ON	+29 VDC CONNECTED TO HEATER, AUTO THERMOSTAT CONTROL ENABLED

- CMD DOES NOT CONTROL HEATER IN PSE CENTRAL STATION ELECTRONICS
- CMD DOES NOT CONTROL SENSOR HEATERS WHEN PSE IS IN EXP 1 STBY SEL (CMD 037).

101 — PSE FILT IN/OUT

REMOVES FEEDBACK LOOP FILTERS FROM LPX, LPY, LPZ. CMD IS BI-STATE IN/OUT & IS SET TO OUT UPON PSE ACTIVATION. FOR PROPER PSE OPERATION, CMD OUT FOR LEVELING AND IN OR OUT FOR CALIB & FOR NORM OPER
NOTE: DO NOT TRANSMIT THIS CMD WHEN ANY LEVEL MOTOR IS ON
IN MANUAL MODE CMD HAS NO EFFECT.
DO NOT SEND CMD WHEN IN AUTO MODE.

102 — LVL SNSR IN/OUT

ALLOWS COARSE LEVEL SENSORS TO CONTROL LPX & LPY DRIVE MOTORS IN THE AUTO LEVEL MODE. CMD IS BI-STATE IN/OUT & IS SET TO OUT UPON PSE ACTIVATION.

103 — PSE LVL MDE A/F

SELECTS LEVELING MODE OF LPX, LPY & LPZ. CMD IS BI-STATE AUTO/FORCED & IS SET TO AUTO UPON PSE ACTIVATION.
NOTE: DO NOT TRANSMIT THIS CMD WHEN ANY LEVEL MOTOR IS ON

PSE MEASUREMENTS

MEASUREMENT NAME	SYMBOL	ALSEP WORD NO'S	ALSEP FRAMES	
PSE/X DATA	DL-01	9, 25, 41, 57	EVERY	SCIENTIFIC
PSE/Y DATA	DL-02	11, 27, 43, 59	EVERY	
PSE/Z DATA	DL-03	13, 29, 45, 61	EVERY	
PSE TIDAL X DATA	DL-04	35	EVEN	
PSE TIDAL Y DATA	DL-05	37	EVEN	
PSE TIDAL Z DATA	DL-06	35	ODD	
PSE INST DEG F	DL-07	37	ODD	
PSE/SP DATA	DL-08	EVERY EVEN EXCEPT 2*, 46, AND 56	EVERY	
* IN ALSEP'S 1 AND 2				
PSE/XY GAIN DB	AL-01	33	23	ENGINEERING
PSE/Z GAIN DB	AL-02	33	38	
LVL DIR/V STA	AL-03	33	53	
PSE/SP GAIN DB	AL-04	33	68	
LVL MODE SNSR STA	AL-05	33	24	
PSE T CTL STA	AL-06	33	39	
PSE/LP/SP CAL STA	AL-07	33	54	
PSE UNCAGE STATUS	AL-08	33	69	

DEC 67 5178.8.17

ACTIVE SEISMIC EXPERIMENT SUBSYSTEM

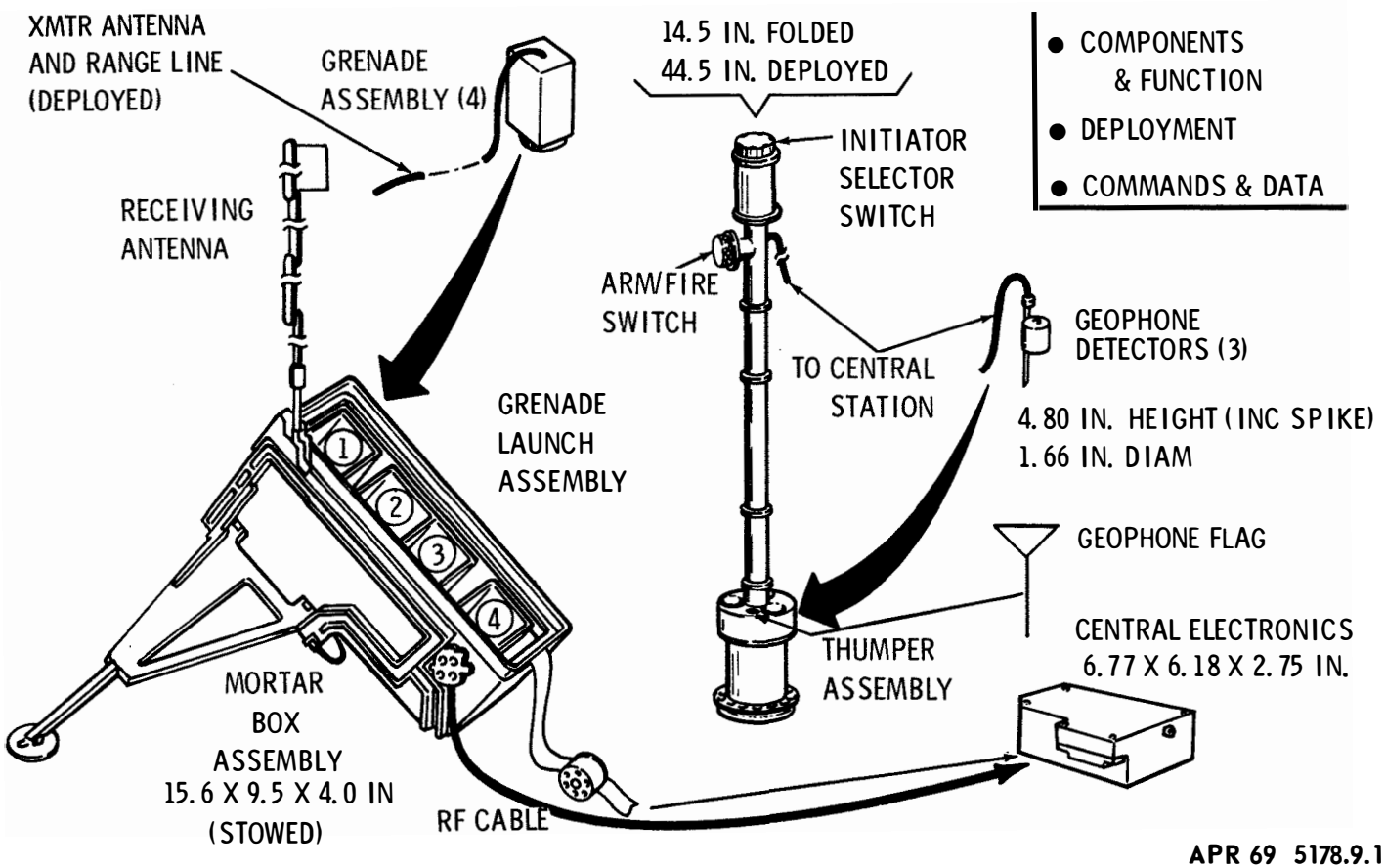

APR 69 5178.9.1

ASE GENERAL FEATURES

PURPOSE:
- MONITOR NATURAL LUNAR SEISMIC ACTIVITY
- GENERATE & MONITOR ARTIFICIAL SEISMIC ENERGY

} IN THE RANGE FROM 3 TO 250 Hz

GENERATE (SOURCES):
- EXPLOSIVE DEVICES

THUMPER ASI's (21)
- ACTUATED NEAR MARKED POSITIONS ON GEOPHONE CABLE

MORTAR GRENADES (4)
- RANGE, FT: 500, 1000, 3000, 5000
- CHARGE PROPORTIONAL TO RANGE

MONITOR (DETECTORS):
- GEOPHONES (3) WITH LOG COMPRESSION AMPLIFIERS

BY VARYING THE MAGNITUDE & LOCATION OF SOURCES WITH RESPECT TO DETECTORS
- OBTAIN PENETRATION OF WAVES TO ≈ 500 FT
- THUS INVESTIGATE VELOCITY THROUGH SEVERAL LAYERS OF SUBSURFACE MATERIAL

- ACCURATE DETERMINATION OF SHOT TIME AND RANGE IS FUNDAMENTAL FOR ANALYSIS OF GEOPHONE DATA

	SHOT TIME	RANGE
THUMPER	PRESSURE SW SIGNAL	ASTRONAUT LOCATION
GRENADES	XMTR OFF SIGNAL	TRAJECTORY CALCULATIONS

JAN 68 5178.9.2

ASE FUNCTIONAL DIAGRAM

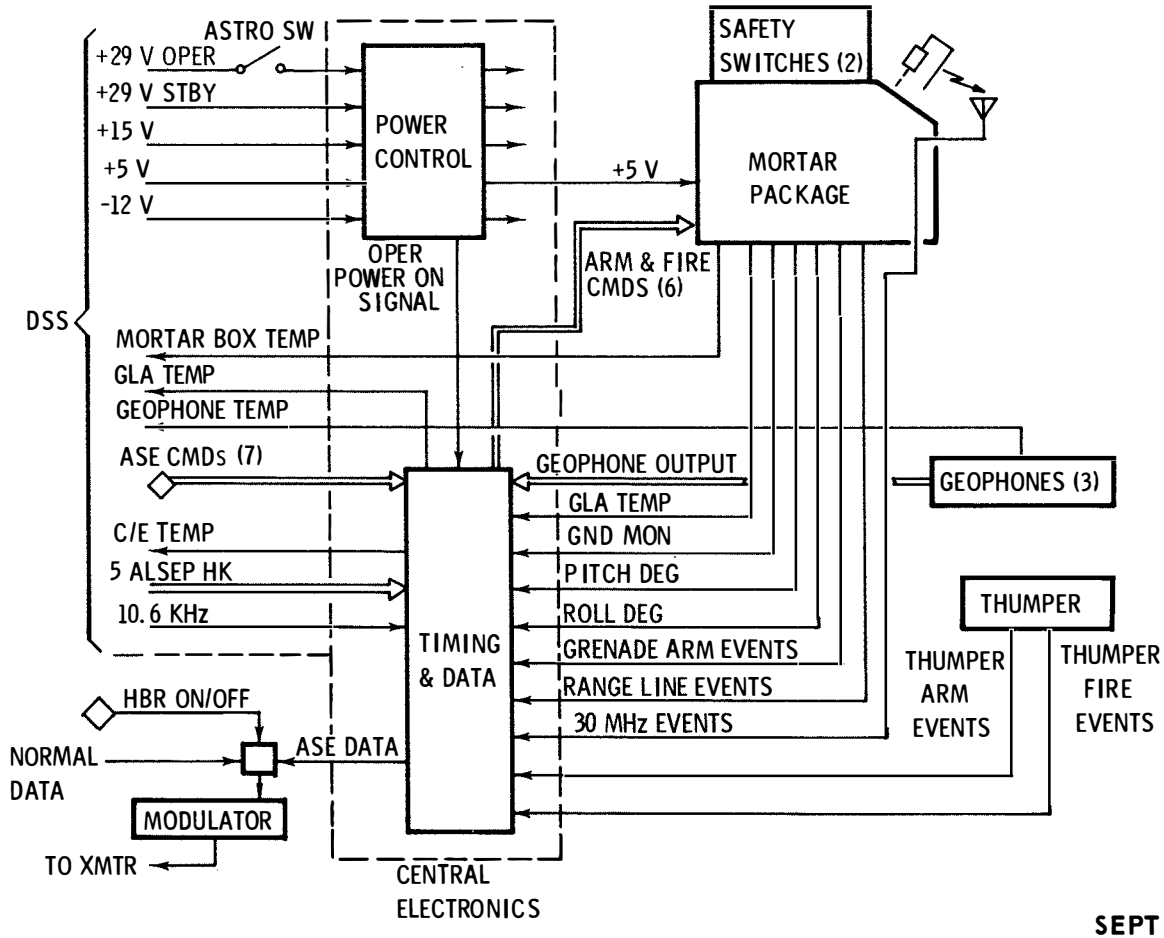

SEPT 68 5178.9.3

ASE THUMPER FUNCTION

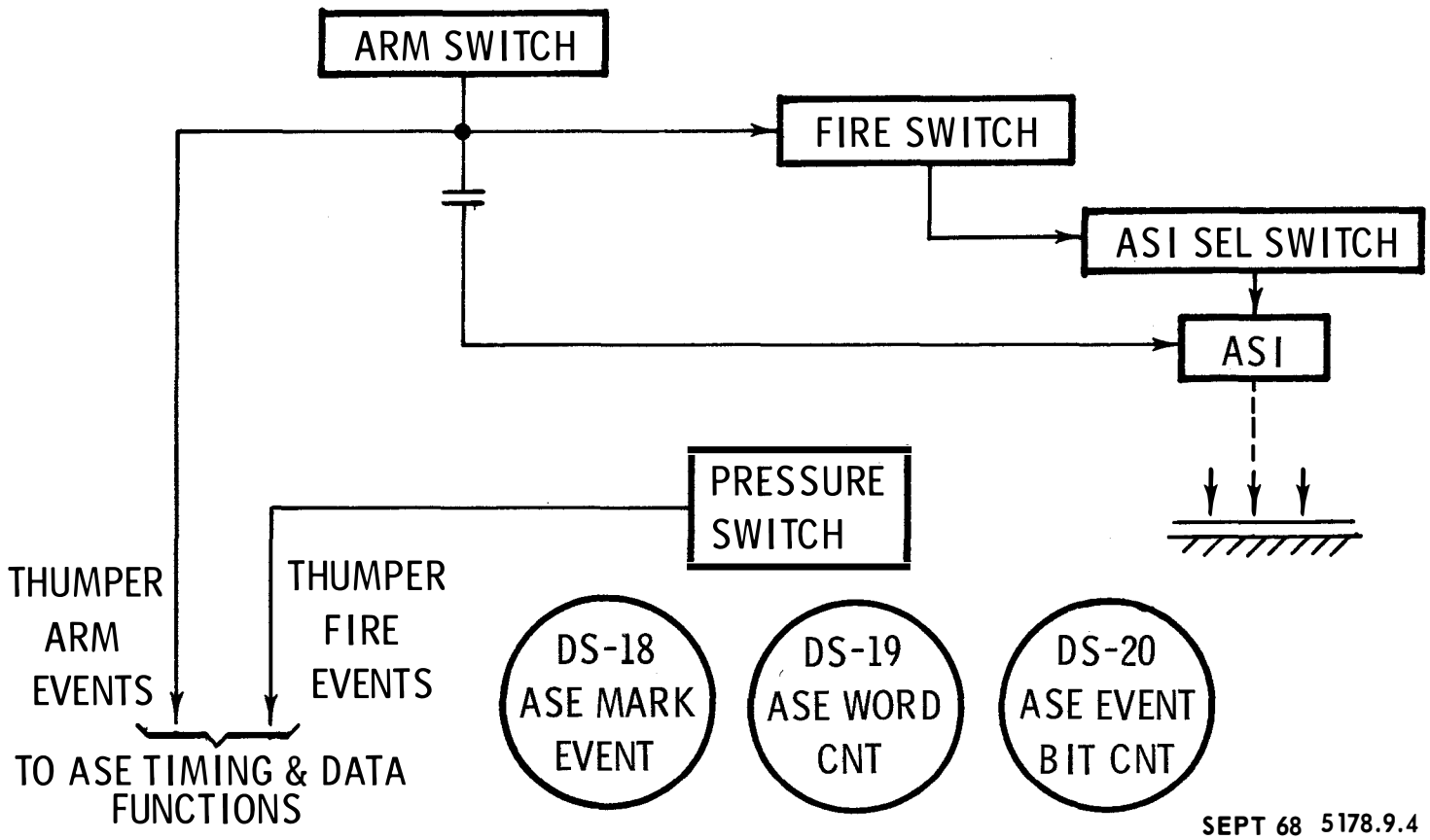

SEPT 68 5178.9.4

ASE THUMPER FEATURES

- INITIATOR (ASI) MOUNTING PLATE & BASE PLATE } { INSIDE LOWER END
- ARM/FIRE & ASI SELECTOR SWITCHES } { ON UPPER END
- FLAT, 4-CONDUCTOR CABLE TO CENTRAL ELECTRONICS } { ON UPPER SPLIT REEL } { UNWOUND DURING DEPLOYMENT
- 3 GEOPHONES WITH CABLES } { ON LOWER INTEGRAL REEL } { UNWOUND DURING DEPLOYMENT
- GEOPHONE FLAG
- PRESSURE SWITCH ON ASI MOUNTING PLATE DETECTS TIME OF SEISMIC EXPLOSION
- GEOPHONE FLAG DEPLOYED ON LUNAR SURFACE AT 150 FT TO AID IN GEOPHONE
- CABLE ALIGNMENT
- GEOPHONES AND CABLES STOWED ON THUMPER UNTIL DEPLOYED

APR 69 5178.9.5

ASE GEOPHONE FUNCTION

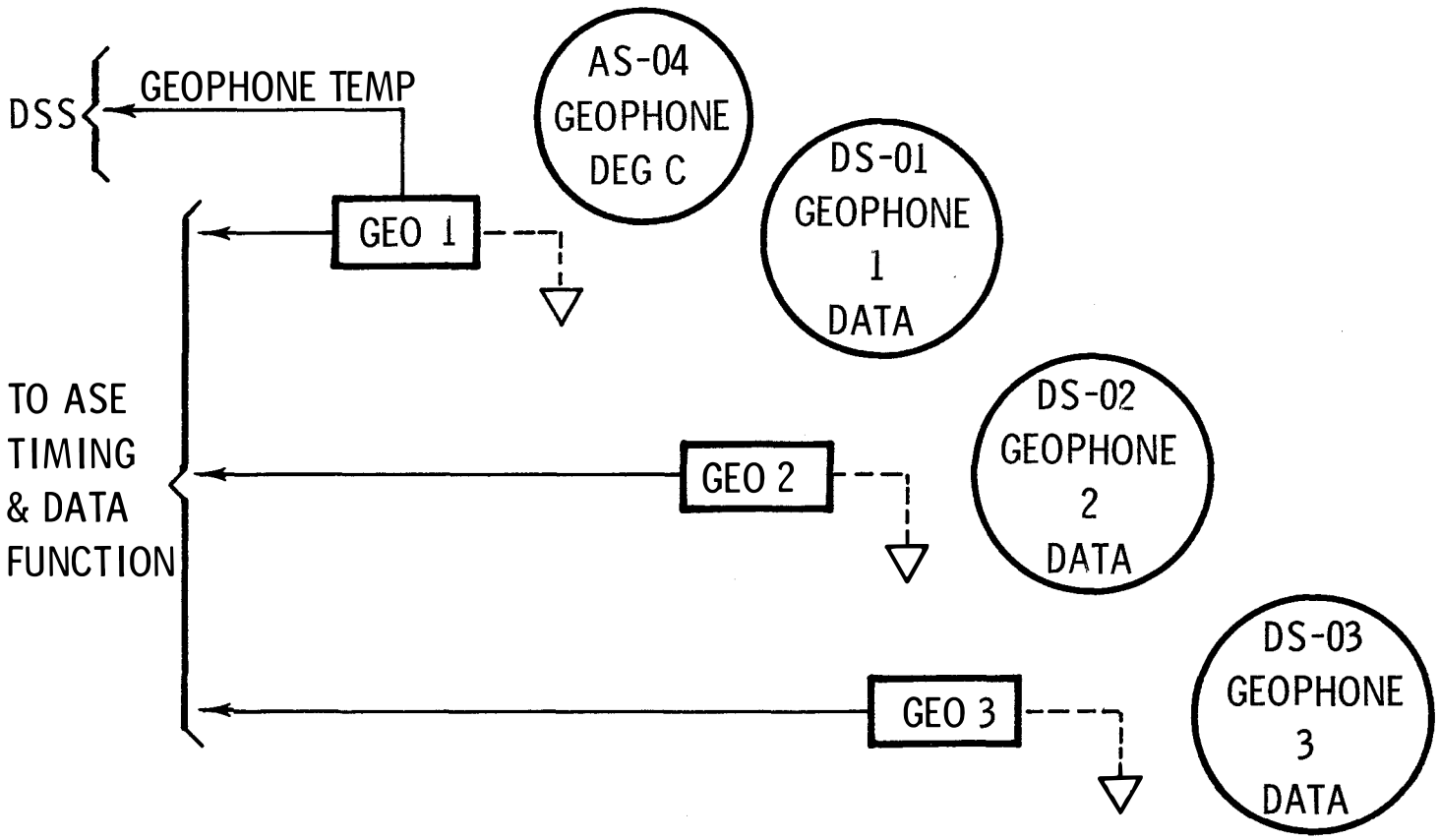

JAN 68 5178.9.6

ASE GEOPHONE FEATURES

- ELECTROMAGNETIC TRANSDUCERS (VELOCITY SENSOR) (OUTPUT TO SEPARATE LOG COMPRESSION AMPLIFIERS)
- IMPLANTED IN SURFACE BY SPIKE
- TEMPERATURE SENSOR IN ONE GEOPHONE
- 7.5 CPS NATURAL FREQUENCY
- SPRING CONSTANT DESIGNED FOR LUNAR GRAVITY

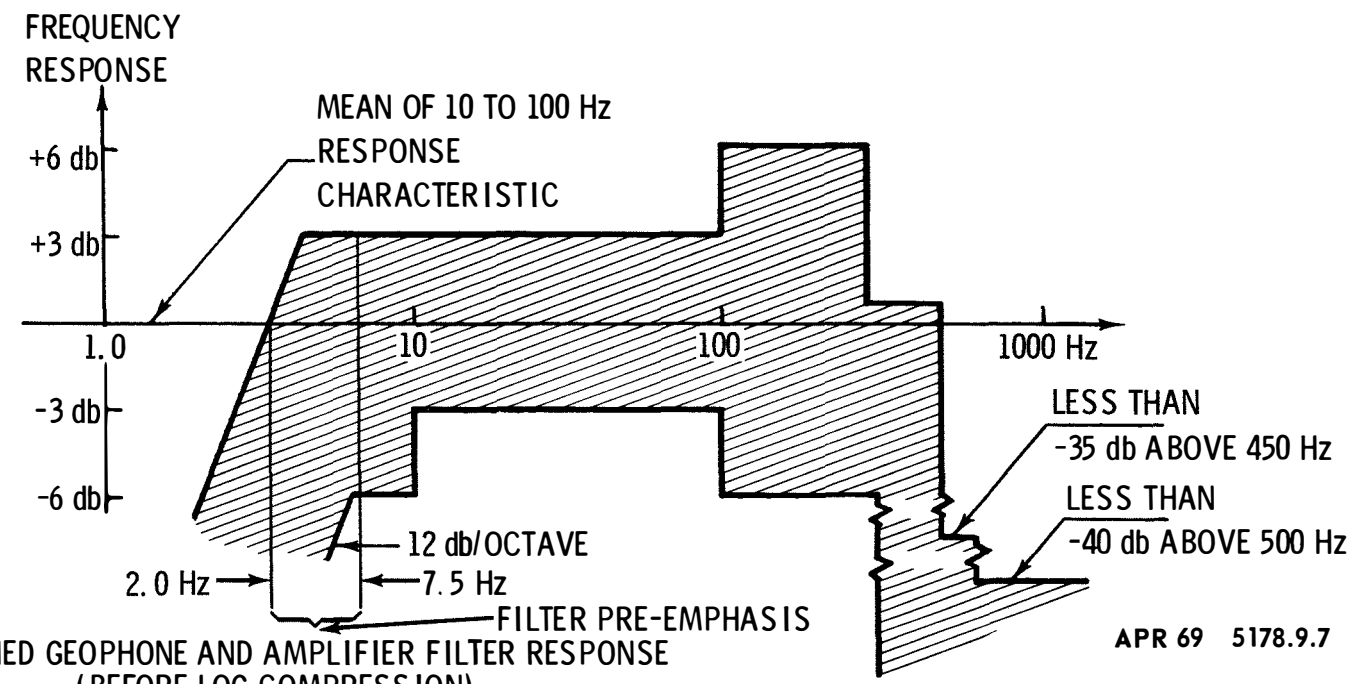

COMBINED GEOPHONE AND AMPLIFIER FILTER RESPONSE (BEFORE LOG COMPRESSION)

ASE MORTAR PACKAGE FUNCTION

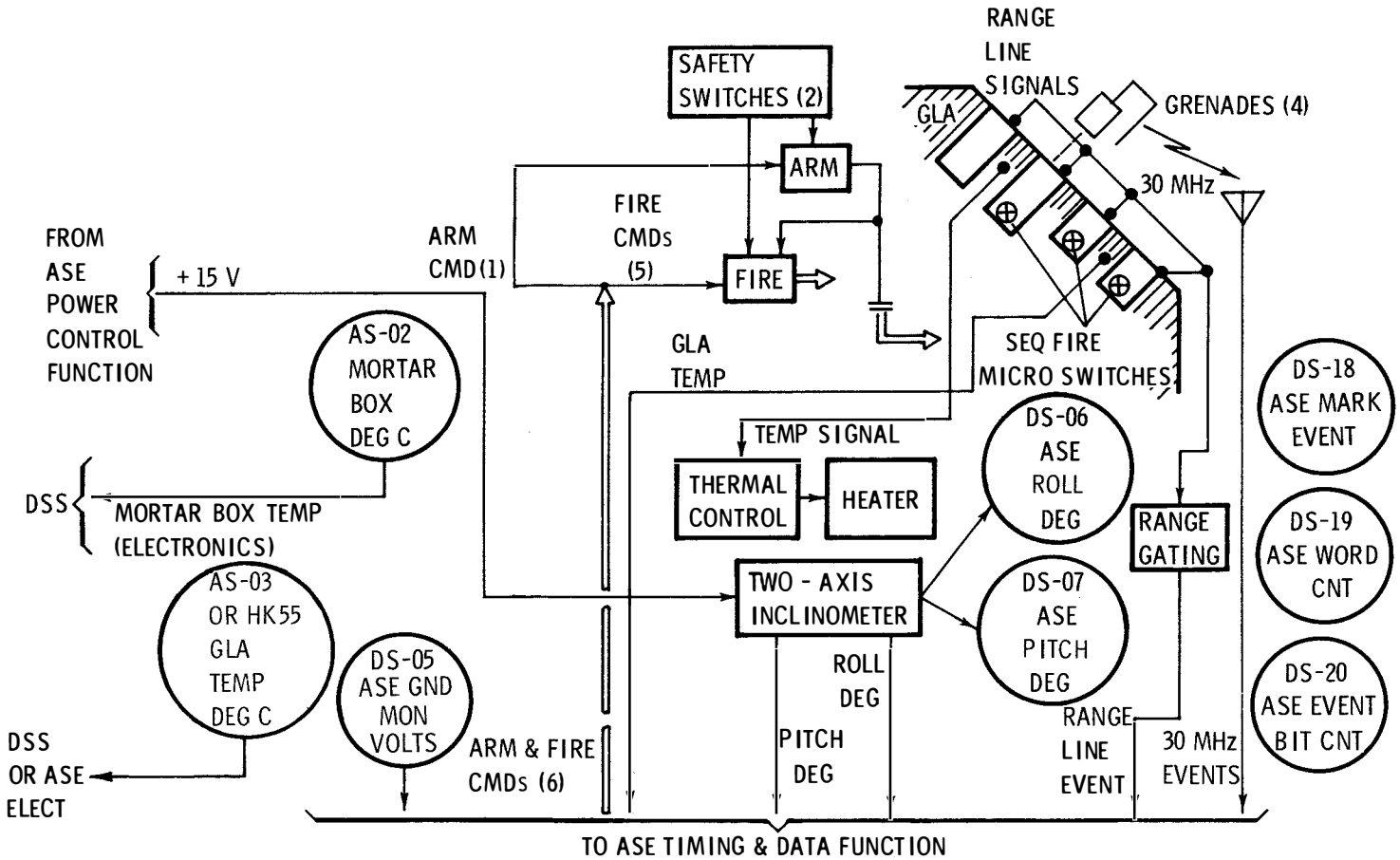

APR 69 5178.9.8

ASE MORTAR PACKAGE COMPONENTS

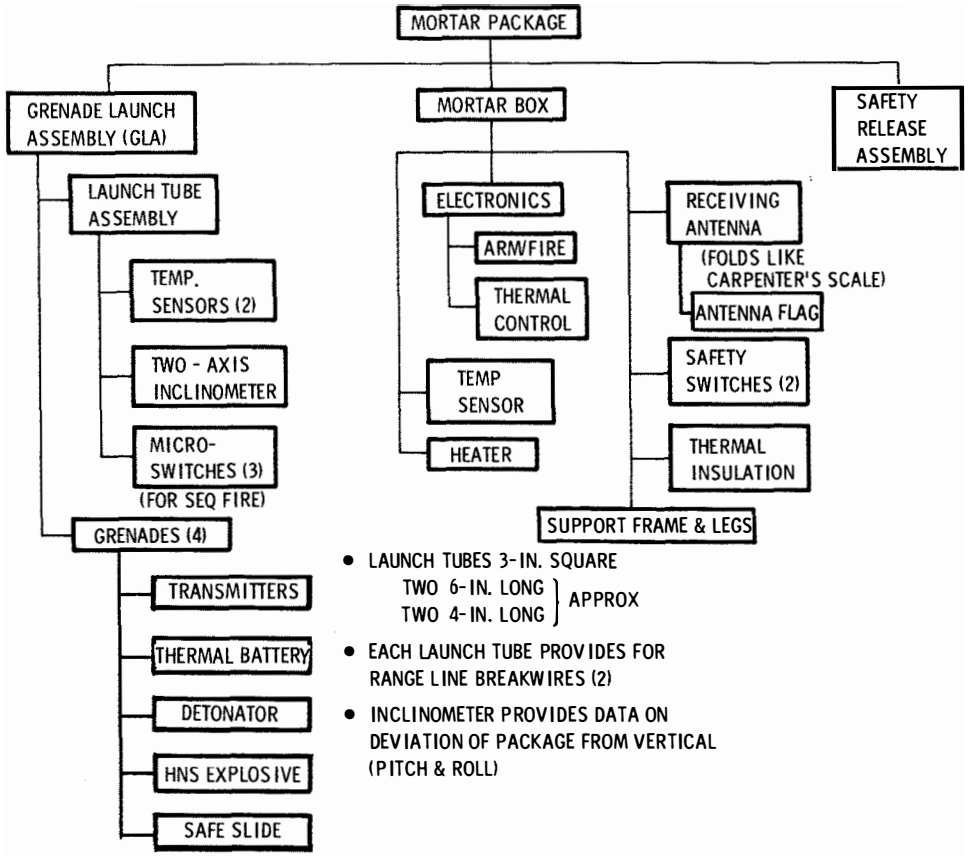

- LAUNCH TUBES 3-IN. SQUARE
  TWO 6-IN. LONG } APPROX
  TWO 4-IN. LONG }
- EACH LAUNCH TUBE PROVIDES FOR RANGE LINE BREAKWIRES (2)
- INCLINOMETER PROVIDES DATA ON DEVIATION OF PACKAGE FROM VERTICAL (PITCH & ROLL)

APR 69 5178.9.9

ASE GRENADE CHARACTERISTICS

DESCRIPTION

- CASING SIZE:
  - 2.7 IN. SQUARE } APPROX
  - 4 TO 6 IN. LONG } APPROX
- CASING CONTAINS:
  - SOLID FUEL ROCKET MOTOR
  - SAFE SLIDE
  - HIGH EXPLOSIVE CHARGE
  - IGNITION & DETONATION DEVICES
  - THERMAL BATTERY
  - 30 MHz XMTR CONNECTED TO TRAILING WIRE ANTENNA (FUNCTIONS AS RANGE LINE)
- GRENADES DIFFER ONLY IN AMOUNT OF PROPELLANT & HIGH EXPLOSIVE

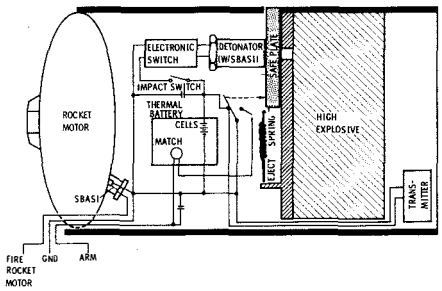

OPERATION

- GRENADE ARM CMD APPLIES PULSE TO ROCKET MOTOR ARMING CIRCUIT CHARGING CONDENSER IN MORTAR BOX AND CHARGES MATCH CONDENSER IN GRENADE)
- GRENADE FIRE CMD DISCHARGES CONDENSER THROUGH ASI IGNITING ROCKET MOTOR
- WHEN GRENADE LEAVES TUBE:
  - SPRING EJECTED SAFE SLIDE ENABLES DETONATOR
  - SLIDE EJECTION ACTIVATES MICROSWITCH IN GRENADE
  - MICROSWITCH DISCHARGES CONDENSER ACROSS MATCH ACTIVATING THERMAL BATTERY
- BATTERY PROVIDES INTERNAL POWER FOR:
  - 30 MHz XMTR
  - CHARGING DETONATOR CONDENSER
- EVENT MARK FOR:
  - BREAKWIRE (10-IN. & 25-FT + 10-IN. TRAVEL)
- AT IMPACT, AN OMNIDIRECTIONAL IMPACT SWITCH DISCHARGES CONDENSER THROUGH DETONATOR SETTING OFF HIGH EXPLOSIVE
- EXPLOSION DESTROYS BATTERY AND TRANSMITTER TERMINATING RF TRANSMISSION
- EVENT MARK FOR XMTR OFF

APR 69 5178.9.10

ASE GRENADE RANGING

CONCEPT

- BALLISTIC TRAJECTORY OF GRENADE IS CALCULATED FROM ITS INITIAL DIRECTION & TIME OF FLIGHT:
  - DIRECTION (45° ANGLE OF MORTAR CORRECTED BY INCLINOMETER ROLL & PITCH)
  - TIME-OF-FLIGHT FROM LAUNCH (FIRST RANGE LINE SIGNAL) TO IMPACT (XMTR OFF)
- CONFIDENCE IS ENHANCED BY KNOWING INITIAL LAUNCH VELOCITY (BASED ON TIME BETWEEN RANGE LINE EVENTS FOR 10-IN. & 25-FT + 10-IN. TRAVEL)

MECHANIZATION

- RANGE LINE: A THIN STRANDED CABLE WOUND AROUND THE OUTSIDE OF LAUNCH TUBE & CONNECTED AT ONE END TO GRENADE (30 MHz TRANSMITTING ANTENNA)
- BREAKWIRES (2): EACH A SINGLE LOOP OF FINE COPPER WIRE ARRANGED TO BE SEVERED WHEN RANGE LINE REACHES 10-IN. & 25-FT + 10-IN. POINTS
- INCLINOMETER: MEASURES DEVIATIONS AROUND TWO AXES
  - PITCH: INCREASE OR DECREASE IN THE 45° LAUNCH ANGLE
  - ROLL: ROTATION AROUND A HORIZONTAL AXIS PERPENDICULAR TO THE PITCH AXIS

IMPLICATIONS

- INCLINOMETER DATA IS AVAILABLE IN CASE MORTAR PACKAGE SHIFTS DURING EACH FIRING
- PACKAGE STABILITY ENHANCED BY "BLOWOUT" REAR CLOSURE & THRUST TERMINATION BEFORE GRENADE LEAVES TUBE
- SEQUENTIAL FIRING ORDER (2,4,3,1), ALSO USED FOR STANDARD FIRING, OPTIMIZES PACKAGE STABILITY
- NOTE THAT ARM CMD MUST BE SENT 4 TIMES (SEQUENTIAL & STANDARD CONDENSERS ARE CHARGED & DISCHARGED SIMULTANEOUSLY); ALSO, SEQUENTIAL FIRE ACTUATES ONE GRENADE EACH TIME SENT

ASE CENTRAL ELECTRONICS FEATURES

TIMING & DATA

- TEMP SENSING

  INTERNAL TEMPERATURE MONITORED IN BASIC ALSEP DATA AS WELL AS ASE DATA STREAM

- LOG COMPRESSION AMPLIFIERS

  LOW-NOISE, PROVIDE WIDE DYNAMIC RANGE
  PRE-EMPHASIS TO INCREASE LOW FREQ GEOPHONE RESPONSE

- GEOPHONE CALIBRATION
  - DRIVER (PULSE STRETCHER) CONVERTS COMMAND INTO 1-SEC EXCITATION PULSE APPLIED VIA AMPLIFIERS
  - ELECTRICALLY DRIVES GEOPHONES FOR MEASUREMENT OF RESONANT FREQUENCY, GENERATOR CONSTANT, & DAMPING COEFFICIENT
  - COMPARE TO PREFLIGHT DATA (RELATIVE CALIBRATION)
  - PULSE VOLTAGE SAMPLED IN ASE DATA
- ANALOG MULTIPLEXER & ADC
  - ASE COMPRESSED SEISMIC DATA CONVERTED TO 5-BIT DIGITAL
  - ASE ENG & ALSEP HK (5 KEY PARAMETERS) CONVERTED TO 8-BIT DIGITAL, & BOTH READ OUT AS 4 BITS IN EACH OF TWO ASE WORDS
  - ADC CAL CIRCUIT GIVES 2-POINT CHECK
- TIMING & CONTROL
  - 4, 5, & 32 SEQUENCE COUNTER OPERATES ON 10.6 KHz SQUARE WAVE FROM DSS
  - PROVIDES FOR 5-BIT SUBWORDS, 4 PER ASE WORD (20 BITS) & 32 WORDS PER FRAME (640 BITS)
- DATA RATE, 10.6 KBPS (ALMOST ENTIRELY ASE DATA) GIVE:
  - RELATIVELY HIGH-FREQUENCY SEISMIC DATA
  - ACCURATE ENCODING & TRANSMISSION OF REAL-TIME EVENTS

POWER CONTROL

- ASE HAS NO DC/DC CONVERSION; ALL VOLTAGES SUPPLIED THROUGH DSS
- CURRENT LIMITERS

LINE, VOLTS	LIMIT, AMPS
+15	0.15
+ 5	0.50
-12	0.15

- POWER RESET BY SWITCHING +29 V EXPER POWER OPER/STBY/OPER

APR 69 5178.9.12

ASE TIMING AND DATA FUNCTIONS

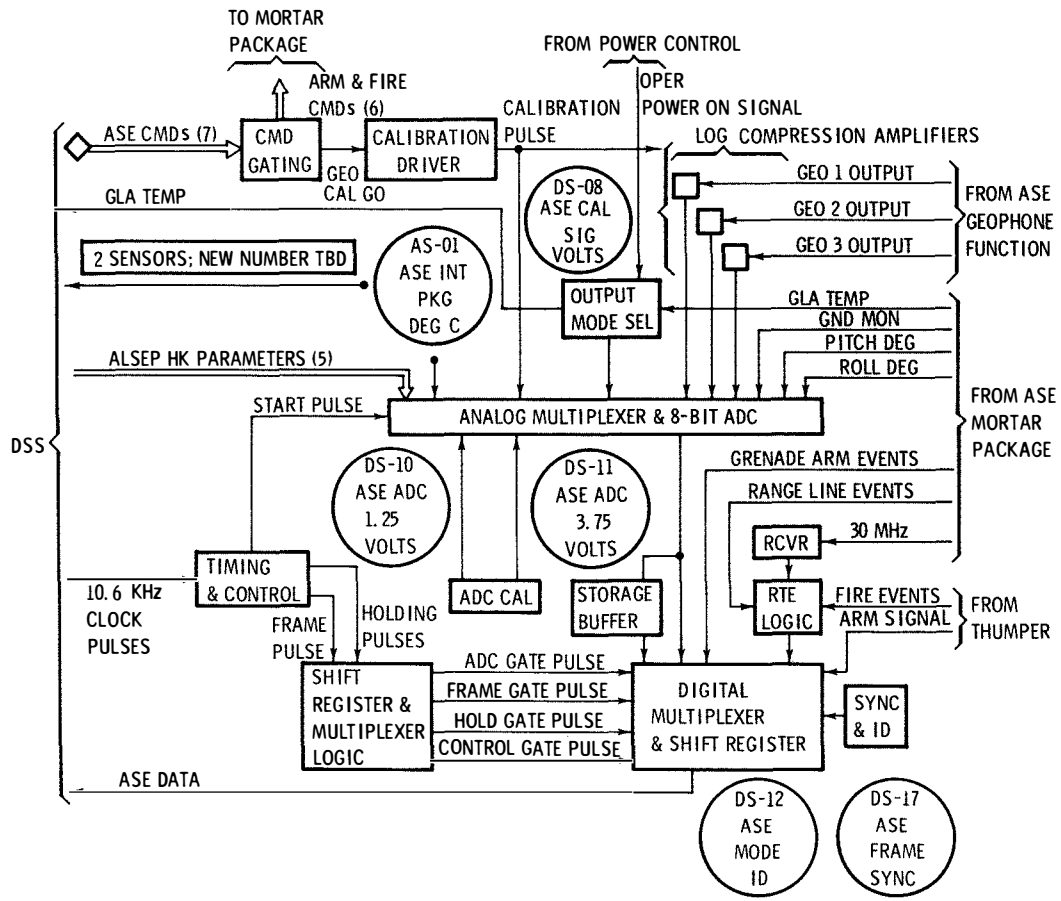

SEPT 68 5178.9.13

ASE POWER CONTROL FUNCTIONS

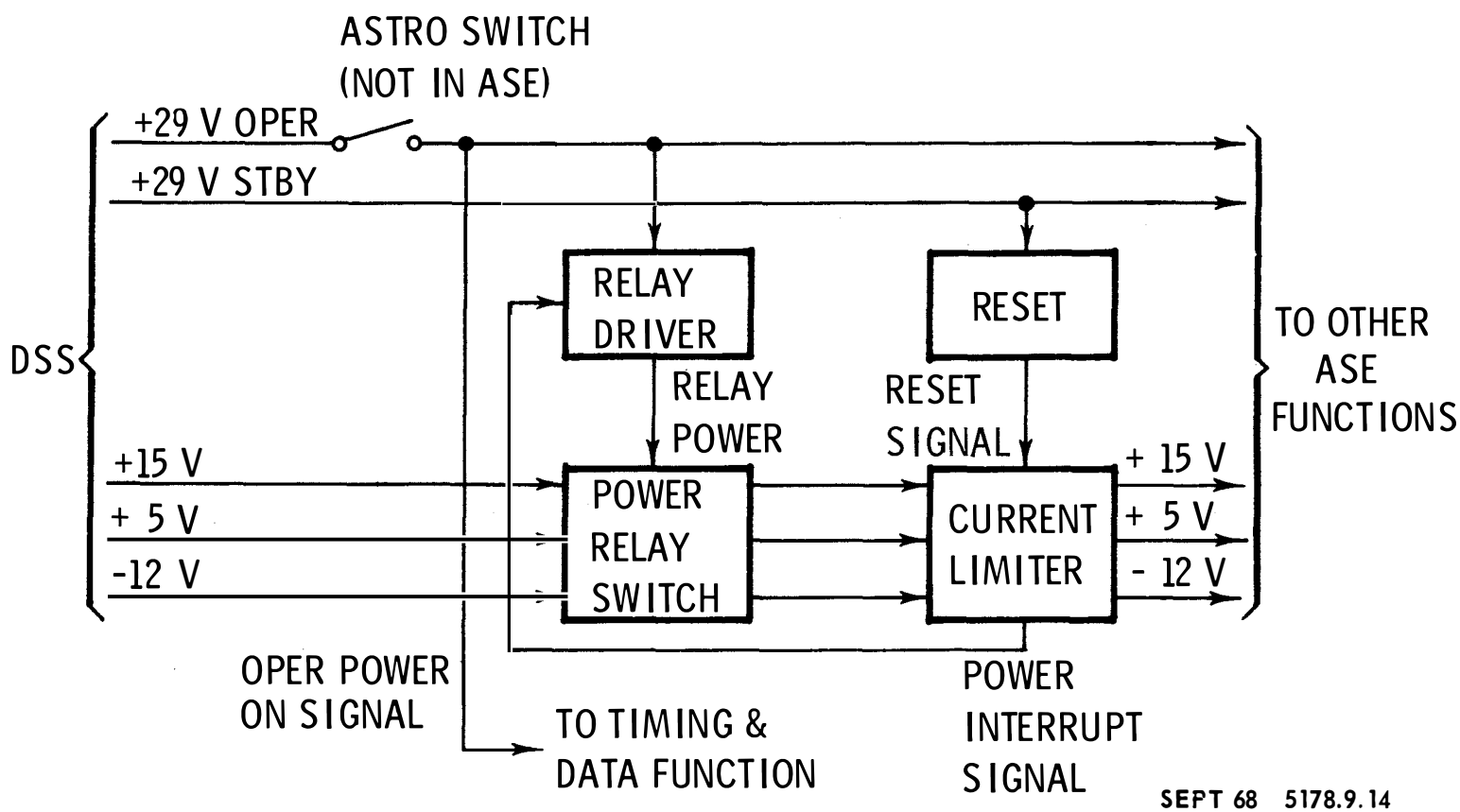

SEPT 68 5178.9.14

ASE THERMAL CONTROL

MECHANICAL

(MORTAR PACKAGE)

- 0.5-IN. MULTILAYER ALUMINIZED MYLAR ON SIDES & BOTTOM
- THIN ALUMINIZED MYLAR SUNSHIELD OVER TOP
- GRENADES LAUNCHED THROUGH SUNSHIELD
- ROCKET BLAST DISINTEGRATES MYLAR INSULATION REDUCING RECOIL EFFECT ON BOX STABILITY

ELECTRICAL

- MORTAR PACKAGE
  - ELECTRONIC SENSOR/CONTROL CIRCUIT OPERATES SERIES/PARALLEL HEATER ARRAY TO MAINTAIN TEMP ABOVE -60° C
  - PROPORTIONAL CONTROL, DISSIPATION IS A FUNCTION OF TEMPERATURE
  - CIRCUIT ACTIVATED ONLY IN STBY (NOTE: ASE IS IN STBY MOST OF THE TIME)
- CENTRAL ELECTRONICS IS CONTROLLED BY CENTRAL STATION ENVIRONMENT
- THUMPER HAS NO HEATER

ASE POWER PROFILE

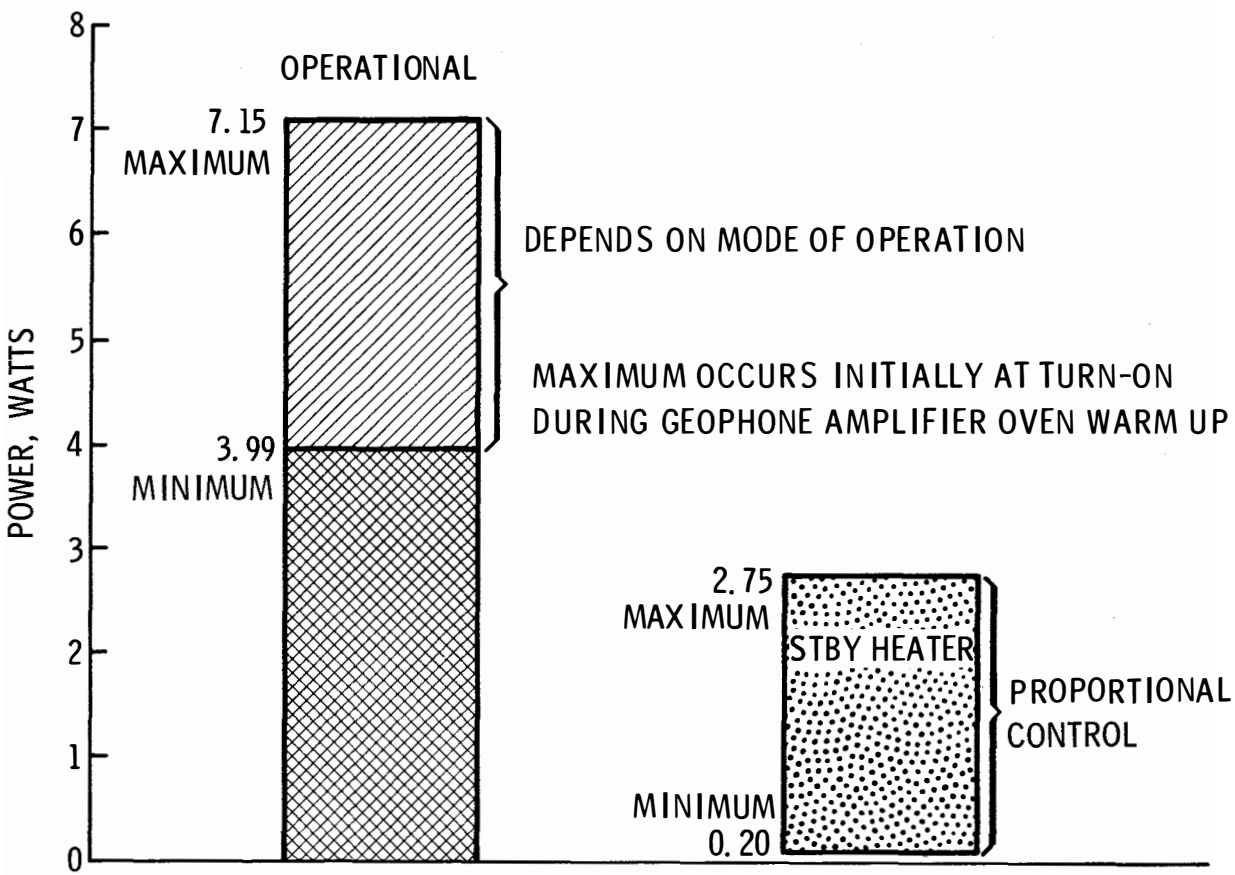

SEPT 68 5178.9.16

ASE SAFETY FEATURES

THUMPER

- ROTARY ARMING SWITCH, SPRING LOADED TO SAFE POSITION, ACTUATED ≈4 SEC TO CHARGE CONDENSER (THEN PUSH TO FIRE)
- ASI SELECTOR SWITCH HAS 22 POSITIONS (INC OFF) AND SHORTS ALL ASI'S EXCEPT THE SELECTED ONE

CENTRAL ELECTRONICS

- CENTRAL STATION ASTRONAUT SWITCH (TWO-POSITION) OPENS AND CLOSES +29 V OPER POWER LINE BETWEEN PDU & ASE
- IN SERIES WITH CMD-ACTIVATED RELAY OF PDU
- IN OPEN POSITION, PRECLUDES ACCIDENTAL APPLICATION OF OPER POWER TO ASE

GRENADES

- SUPPORTED WITHIN LAUNCH TUBES, LOCKED IN PLACE BY SAFETY ROD ASSY FOR FLIGHT & DEPLOYMENT (REMOVED BY ASTRONAUT)
- ARMING & FIRING CIRCUITS OF ALL 4 ROCKET MOTORS SHORTED BY 2 SAFETY SWITCHES ON MORTAR BOX (ACTIVATED BY ASTRONAUT)
- SAFE SLIDE BETWEEN DETONATING CARTRIDGE & HIGH EXPLOSIVE IN EACH GRENADE, SPRING-EJECTED AT LAUNCH
- THERMAL BATTERY INACTIVE (& SHORTED) UNTIL PLATE EJECTION TRIPS A MICROSWITCH
- THERMAL BATTERY MATCH IS ACTIVATED BY A CONDENSER WHICH IS CHARGED VIA GRENADE ARM CMD
- THERMAL BATTERY OPERATES THROUGH (a) 15-SEC TIME DELAY & (b) IMPACT SWITCH TO SUPPLY POWER TO THE GRENADE DETONATOR. IF IMPACT COMES BEFORE 15 SEC OR AFTER ≈10 MIN, THERE IS NO BATTERY POWER FOR DETONATOR

ASE DEPLOYMENT SEQUENCE

1. VERIFY THAT CENTRAL STATION ASTRONAUT SWITCH IS IN OPEN POSITION } ← TENTATIVE
2. REMOVE THUMPER & PLACE IN TEMPORARY LOCATION
3. REMOVE MORTAR BOX & PLACE 10 FT FROM CENTRAL STATION IN OPPOSITE DIRECTION TO THAT SELECTED FOR GEOPHONES
4. ALIGN TO FIRE AWAY FROM GEOPHONES & ERECT ASE RECEIVING ANTENNA (INC FLAG)
5. ERECT CENTRAL STATION SUNSHIELD & ANTENNA
6. PLACE CENTRAL STATION ASTRONAUT SWITCH IN CLOSED POSITION }
7. AFTER ALSEP COMMUNICATIONS HAVE BEEN ESTABLISHED & SWITCHED TO ASE HBR, UNFOLD THUMPER & WALK OUT IN SELECTED DIRECTION PLACING GEOPHONES AT 10, 160, & 310 FT FROM CENTRAL STATION & IN LINE $\pm 3^{\circ}$ USING FLAG ON MORTAR BOX (PLUS FLAG PLACED AT 160-FT GEOPHONE LOCATION) AS REFERENCE
8. RETURN ALONG GEOPHONE CABLE ACTUATING THUMPER AT 15-FT INTERVALS AS INDICATED BY CABLE MARKINGS
9. PLACE CENTRAL STATION ASTRONAUT SWITCH IN OPEN POSITION }
10. REMOVE GRENADE RETAINING ROD ASSY FROM MORTAR BOX
11. ACTUATE MORTAR BOX SAFETY SWITCHES (2) REMOVING SHORTS FROM GRENADE ARM/FIRE CIRCUITS
12. PLACE CENTRAL STATION ASTRONAUT SWITCH IN CLOSED POSITION

SEPT 68 5178.9.18

ASE EMPLACEMENT DIAGRAM

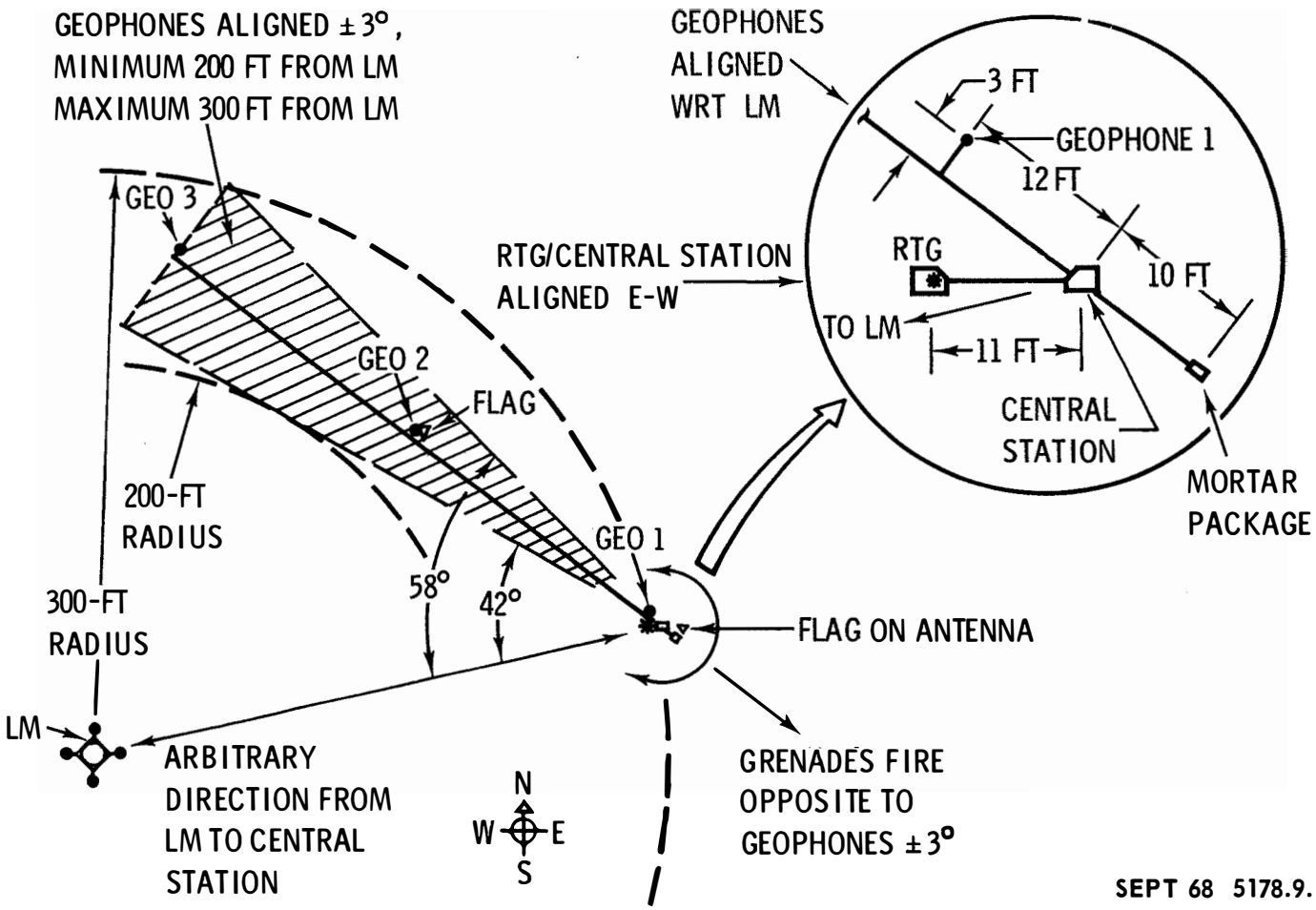

SEPT 68 5178.9.19

ASE EMPLACEMENT CRITERIA

	PARAMETER	REQUIREMENT	PRIORITY	INDICATOR	COMMENTS
MORTAR PKG	SITE SELECTION	LEVEL (UPRANGE & DOWNRANGE)	1	EYEBALL	SELECTION MUST CONSIDER BOTH GRENADE IMPACT & GEOPHONE AREAS
MORTAR PKG	DISTANCE FROM SUBPACKAGE 1	10 ± 1 FT (11 FT CABLE)	2	PACED OFF	AT LEAST 10 FT FROM RTG
MORTAR PKG	DIRECTION FROM SUBPACKAGE 1	130 ± 8° FROM LM *	2	EYEBALL	122° FOR 300 FT PLSS CONSTRAINT 138° FOR 200 FT LM SEPARATION
MORTAR PKG	LEVEL	± 10° OF HORIZONTAL	1	EYEBALL	INTERNAL LEVEL SENSORS
MORTAR PKG	ALIGN	± 3° FROM ASSUMED GEOPHONES DEPLOYMENT LINE	1	EYEBALL	FIRES AWAY FROM LM & GEOPHONES
GEOPHONES	DISTANCE FROM SUBPACKAGE 1	12 ± 2 FT TO 1ST 150 + 1.5 FT 1ST TO 2ND 300 ± 3 FT 1ST TO 3RD	1	314 FT CABLE	GEOPHONES SET LATERALLY FROM CABLE ON 3-FT PIGTAILS
GEOPHONES	DIRECTION FROM SUBPACKAGE 1	50 ± 8° FROM LM *	2	EYEBALL	OPPOSITE MORTAR PACKAGE
GEOPHONES	LEVEL GEOPHONE	± 7° OF HORIZONTAL	2	EYEBALL	GEOPHONE RESPONSE REQUIREMENT
GEOPHONES	ALIGN CABLE	± 3° FROM STRAIGHT	1	FLAGS **	VARIATION OF 2ND GEOPHONE FROM LINE BETWEEN 1ST & 3RD
SPECIAL REQUIREMENTS		*30° FROM N-S LINE OF SUBPACKAGE 1 TO AVOID FIELD OF VIEW OF CENTRAL STATION RADIATOR. **2 FLAGS: MORTAR BOX AND 2ND GEOPHONE (USED FOR ALIGNMENT) ANTENNA MOUNTED ON MORTAR BOX (OMNI-DIRECTIONAL).			
EXPERIMENT INTERRELATION		*,**GEOPHONES AT LEAST 10 FT FROM RTG AND SUBPACKAGE 1			

SEPT 68 5178.9.20

ASE MODES OF OPERATION

THUMPER MODE: APPROX 7 MIN (PLUS SET UP) WHILE ASTRONAUT IS ON SURFACE. USES SMALL SEISMIC SOURCES RELATIVELY CLOSE TO GEOPHONES.

LISTENING (PASSIVE) MODE: 15 MINUTES, ONCE PER WEEK (AVERAGE). DETECTS TECTONIC DISTURBANCES OR METEOROID IMPACTS TO EVALUATE SYSTEM STATUS, PARTICULARLY LUNAR SURFACE NOISE LEVEL (WHICH MAY BE A FUNCTION OF AMBIENT TEMPERATURE), AND ASSIST IN SELECTING OPTIMUM TIME FOR MORTAR MODE.

MORTAR OR GRENADE MODE: APPROX 1 HR NEAR END OF ALSEP MISSION. USES RELATIVELY LARGE SEISMIC SOURCES AT RANGES UP TO 5000 FT.

NOTE: ALL MODES REQUIRE 85-FT MSFN ANTENNA BUT, WITH THE EXCEPTION OF THE THUMPER MODE, CAN BE SCHEDULED FOR MOST CONVENIENT GROUND OPERATIONS.

SEPT 68 5178.9.21

ASE COMMANDS

OCTAL COMMAND NUMBERS

003 ASE HBR ON

THIS CMD DISCONNECTS THE ALSEP DATA PROCESSOR FROM THE MODULATOR & CONNECTS THE MODULATOR TO THE ASE PROCESSOR WHICH SUPPLIES HBR DATA (10.6 KBPS).

THIS CMD TAKES EFFECT AT THE SCHEDULED END OF THE 64-WORD ALSEP FRAME DURING WHICH THE CMD IS RECEIVED.

THE DOWNLINK DATA IS MEANINGLESS IF THIS CMD IS EXECUTED WITH NO ASE ON BOARD OR IF ASE IS NOT OPERATING.

005 ASE HBR OFF

THIS CMD DISCONNECTS THE ASE PROCESSOR FROM THE MODULATOR & CONNECTS TO THE ALSEP DATA PROCESSOR WHICH SUPPLIES NBR (1.06 KBPS) OR LBR (0.53 KBPS) DEPENDING ON THE LATEST PREVIOUS BIT RATE CMD.

THIS CMD TAKES EFFECT AT THE SCHEDULED END OF THE 64-WORD ALSEP FRAME DURING WHICH THE CMD IS RECEIVED (ALSEP PROCESSOR OPERATES CONTINUOUSLY).

CENTRAL STATION ACTIVATION OR POWER RESET INITIALIZES ASE HBR OFF.

156 GEO CAL GO

THIS CMD INITIATES A 1-SEC CALIBRATION PULSE WHICH ELECTRICALLY EXCITES THE GEOPHONES. THE PULSE VOLTAGE ALSO APPEARS IN THE ASE DATA.

162 ASE SEQ FIRE

EACH TRANSMISSION OF THIS CMD FIRES A SINGLE ROCKET MOTOR (IF ARMED) IN THE 2, 4, 3, 1 FIRING ORDER. A GRENADES ARM CMD MUST PRECEDE EACH FIRE CMD. THE SEQUENCE IS CONTROLLED BY MICRO-SWITCHES IN THE LAUNCH TUBES; HENCE, PREVIOUS GRENADE MUST LAUNCH BEFORE NEXT MOTOR WILL FIRE.

163 GRENADE 1 FIRE

THIS CMD FIRES THE ROCKET MOTOR OF GRENADE 1, IF ARMED. THIS CMD (LIKE 164, 165 & 166) FOR A SPECIFIC GRENADE PROVIDES AN ALTERNATIVE TO CMD 162 FOR FIRING THE GRENADES.

164 GRENADE 2 FIRE

THIS CMD FIRES THE ROCKET MOTOR OF GRENADE 2, IF ARMED. SEE CMD 163.

165 GRENADE 3 FIRE

THIS CMD FIRES THE ROCKET MOTOR OF GRENADE 3, IF ARMED. SEE CMD 163.

166 GRENADE 4 FIRE

THIS CMD FIRES THE ROCKET MOTOR OF GRENADE 4, IF ARMED. SEE CMD 163.

170 GRENADES ARM

THIS CMD ARMS THE FIRING CIRCUIT APPLICABLE TO ANY OF THE 4 ROCKET MOTORS BY CHARGING A PAIR OF CONDENSERS, ONE FOR SEQUENTIAL FIRING & THE OTHER FOR SPECIFIC GRENADE FIRING. SUBSEQUENT ACTIVATION OF A FIRING CMD DISCHARGES BOTH CONDENSERS, ONE THROUGH A ROCKET MOTOR IGNITION ASI & THE OTHER THROUGH A GROUNDING CIRCUIT. IF NO FIRING CMD IS TRANSMITTED, THE CONDENSERS WILL REMAIN CHARGED INDEFINITELY; HOWEVER, THEY MAY BE RESET TO SAFE (DISCHARGED) BY SWITCHING THE ASE OFF (STBY) FOR A FEW SECONDS.
THIS CMD ALSO CHARGES THE THERMAL BATTERY MATCH CIRCUITS OF ALL 4 GRENADES (UNUSED CIRCUITS DISCHARGED BY FIRE CMD)

ASE DATA FORMAT

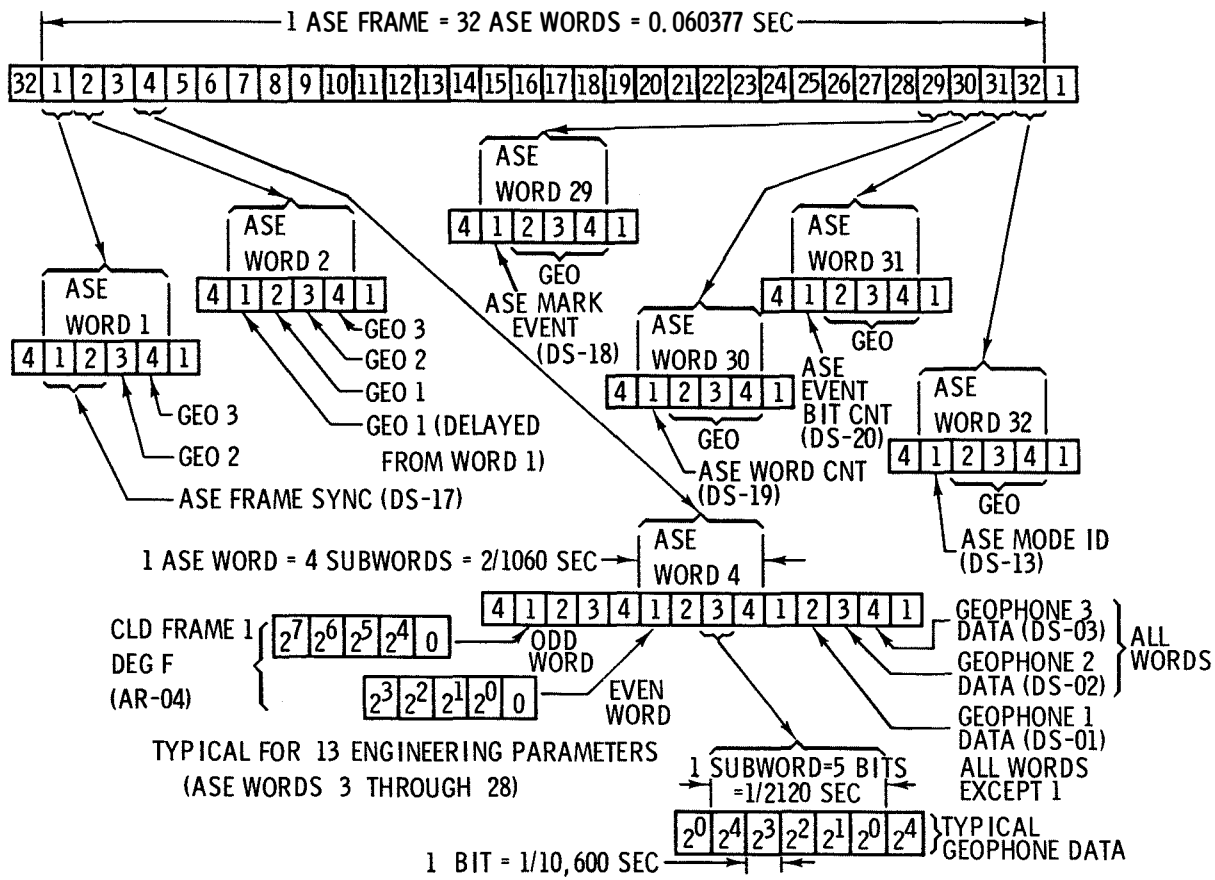

JAN 68 5178.9.23

ASE REAL TIME EVENT DATA

RTE SOURCES

- THUMPER FIRE: INITIATED BY PRESSURE SWITCH ON ASI MOUNTING PLATE
- GRENADE LAUNCH: FIRST BREAKWIRE INDICATES 10-IN. TRAVEL
- VELOCITY: SECOND BREAKWIRE INDICATES 25-FT + 10-IN. TRAVEL
- IMPACT: XMTR OFF

RTE READOUT

- MARK EVENT (ASE WORD 29): NON-ZERO PATTERN (00100) INDICATES THAT AN RTE HAS OCCURRED DURING THE PRECEDING 32-WORD FRAME
- WORD COUNT (ASE WORD 30): INDICATES DURING WHICH WORD OF PRECEDING FRAME THE RTE OCCURRED (5 WORD COUNT BITS = 32 DECIMAL POSSIBILITIES)
- EVENT BIT COUNT (ASE WORD 31): INDICATES DURING WHICH BIT IN THAT WORD THE RTE OCCURRED (ONE OF 20 BITS, GIVES NEAREST 0.1 M SEC)

JAN 68 5178.9.24

ASE MODE ID

SPECIAL BIT PATTERNS FOR EACH OF THE FOLLOWING:

- THUMPER ARM: PICKOFF ON ARM/FIRE SWITCH ACTIVATES ID REGISTER WHICH MAINTAINS THIS PATTERN UNTIL 4 SEC AFTER THUMPER FIRES; REGISTER THEN CLEARS TO ZERO
- GRENADE ARM/FIRE: GRENADE ARM CMD ACTIVATES ID REGISTER WHICH MAINTAINS THIS PATTERN UNTIL CHANGED BY RECEIPT OF GRENADE FIRE CMD

  GRENADE FIRE PATTERN IS MAINTAINED UNTIL CHANGED BY RECEIPT OF NEXT ARM CMD

  PATTERN MAY BE RESET TO ZERO (REGISTER CLEARED) BY SWITCHING ASE OFF (STBY) & ON (OPER)
- GEOPHONE CAL: GEO CAL GO CMD ACTIVATES ID REGISTER FOR THE 1-SEC DURATION OF THE CALIBRATION PULSE; REGISTER THEN CLEARS TO ZERO

JAN 68 5178.9.25

ASE DATA OUTPUT

ALSEP HK
(5 KEY PARAMETERS)
READ OUT IN
ASE FORMAT

4 ASE TEMPs
READ OUT IN
THE INDICATED
ANALOG CHANNELS
OF ALSEP
WORD 33
(ALSEP 4)

NOTE:
ALSEP ANALOG
CHANNELS SAMPLED
ONCE PER 54 SEC
ALSEP SEQUENCE

	SYMBOL	NAME	ASE FORMAT LOCATION WORD	ASE FORMAT LOCATION SUBWORD
	DS-17	ASE FRAME SYNC	1	1 & 2
	DS-02	GEOPHONE 2 DATA	ALL	3
	DS-03	GEOPHONE 3 DATA	ALL	4
	DS-01	GEOPHONE 1 DATA	2 2-32	1 2
	AR-04	CLD FRAME 1 DEG F	3,4	1
	AE-05	PCU 1 SHUNT AMPS	5,6	1
	DS-05	ASE GND MON VOLTS	7,8	1
	DS-06	ASE ROLL DEG	9,10	1
	DS-07	ASE PITCH DEG	11,12	1
55 *	AS-03	ASE GLA DEG C	13,14	1
	DS-08	ADE CAL SIG VOLTS	15,16	1
	DS-11	ASE ADC 3.75 VOLTS	17,18	1
	DS-10	ASE ADC 1.25 VOLTS	19,20	1
29 **	AS-01	ASE C/E DEG C	21,22	1
	AE-03	PCU IN VOLTS	23,24	1
	AE-04	PCU IN AMPS	25,26	1
	AR-01	HOT FRAME 1 DEG F	27,28	1
	DS-18	ASE MARK EVENT	29	1
	DS-19	ASE WORD CNT	30	1
	DS-20	ASE EVENT BIT CNT	31	1
	DS-13	ASE MODE ID	32	1
44	AS-02	MORTAR BOX DEG C		
73	AS-04	GEOPHONE DEG C		

* SWITCHED BY ASE OPER POWER-ON SIGNAL
** TWO SENSORS, NEW SYMBOL TBD

APR 69 5178.9.26

ASE DATA ENCODING

ASE WORD 1

1	2	← SUBWORD
00001	11011	← DS-17 INFO

ASE WORD 30, SUBWORD 1

BIT	DS-20 INFO	BIT	DS-20 INFO
0	00001	10	10001
1	01100	11	11100
2	01110	12	11110
3	01111	13	11111
4	01011	14	11011
5	01001	15	11001
6	10100	16	00100
7	10110	17	00110
8	10111	18	00111
9	10011	19	00011

SEPT 68 5178.9.27

LUNAR SURFACE MAGNETOMETER EXPERIMENT SUBSYSTEM

- COMPONENTS & FUNCTION
- COMMANDS & DATA
- DEPLOYMENT

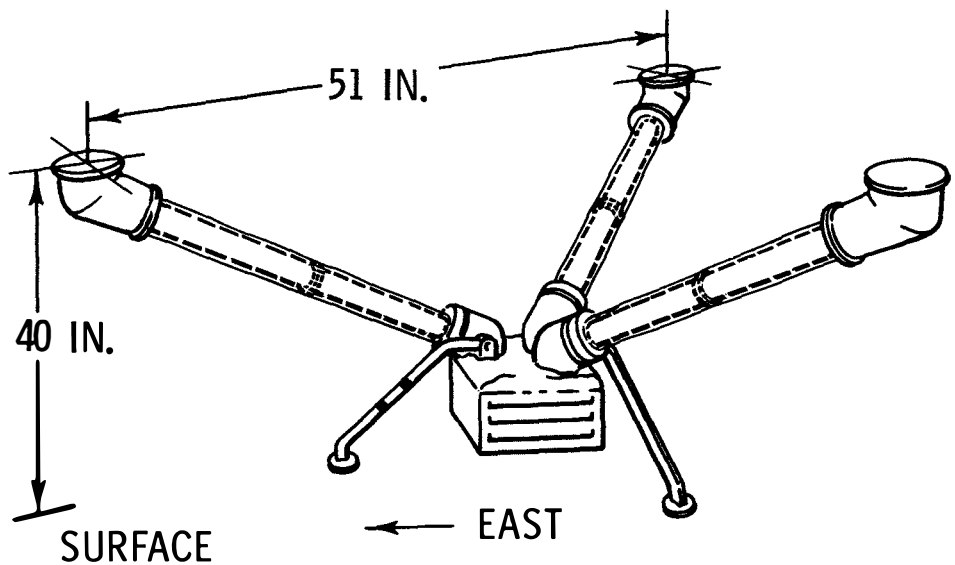

DEPLOYED

19.4 LB W/O CABLE

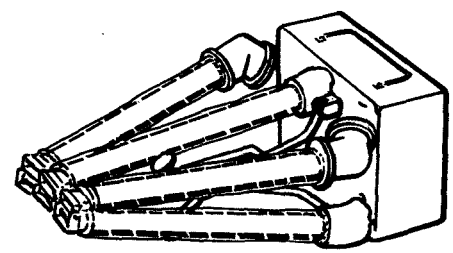

FOLDED

APR 69 5178.10.1

LSM FEATURES & PERFORMANCE

REQUIREMENT	CORRESPONDING FEATURE	
MEASURE MAGNETIC FIELD VECTOR	3 MAGNETIC SENSORS ALIGNED ALONG ORTHOGONAL AXES (X, Y, & Z)	
CAPABILITY FOR MEASURING BOTH DC & SLOW VARIATIONS OF FIELD	DIGITAL FILTERING OF SENSOR OUTPUT	
ACCOMODATE UNCERTAINTY IN FIELD MAGNITUDE	RANGE SELECTION & PERCENTAGE OFFSET BY CMD HIGH OVERALL RESOLUTION	
OBTAIN HIGH OVERALL ACCURACY	HIGH-GAIN SENSOR OUTPUT 10-BIT ADC & SCIENCE TM (INC POLARITY SIGN)	ALIASING ERROR PROTECTION PRECISE MECHANICAL ALIGNMENT END-TO-END CAL BY CMD
MINIMIZE AMBIGUITY	MEASURE LOCAL FIELD GRADIENT (SITE SURVEY MODE) USE LOW INSTRUMENT BIAS SENSORS FLIP 180° BY CMD OR TIMER	

- PROVIDES BASIC DATA ON MAGNITUDE & TEMPORAL VARIATIONS OF THE LUNAR SURFACE EQUATORIAL MAGNETIC FIELD VECTOR
- DATA TAKEN IN SOLAR & ANTI-SOLAR DIRECTION PROVIDES INFORMATION ON HOW INTERPLANETARY MAGNETIC FIELD DIFFUSES THROUGH MOON (ELECTROMAGNETIC PROPERTIES OF DEEP INTERIOR)
- AID IN RECONSTRUCTING GEOLOGICAL EVOLUTION OF MOON
- DETERMINE FEATURES OF MAGNETIC TAIL OF THE EARTH

RANGE	$\pm$ 100 γ, $\pm$ 200 γ, $\pm$ 400 γ (SELECTED BY CMD)
PERCENTAGE OFFSET	7 VALUES (SELECTED BY CMD) FOR EACH RANGE; 0, + 25%, + 50%, + 75%, - 75%, - 50%, - 25% OF NOMINAL FULL SCALE WITH AN ACCURACY OF 0.5% FULL SCALE
FREQ. RESPONSE	$\approx$1.5 CPS
RESOLUTION	$\pm$ 1 LSB (0.2% FULL SCALE)
CROSS-COUPLING	LESS THAN $\pm$ 1 LSB
MONOTONICITY	MONOTONIC OVER FULL RANGE; SATURATED OUTPUT VERIFIED TO 1000 γ & AT EARTH'S FIELD ($\approx$ 35,000 γ)
DC OFFSETS	LESS THAN $\pm$ 1% FULL SCALE OVER OPER TEMP RANGE
SIMULTANEITY	ALL 3 SENSORS SAMPLED WITHIN 588 μ SEC
PERIODICITY (TIME JITTER)	LESS THAN 100 μ SEC

CALIBRATION (BY CMD OR TIMER) USES SAME CIRCUIT AS ZERO OFFSET & 14 STEPS IN SEQUENCE (0, +75%, +50%, +25%, 0, -25%, -50%, -75%, & REPEAT)

LSM MODES OF OPERATION

- SCIENTIFIC MODE: NORMAL OPERATING MODE OF MAGNETIC FIELD SENSING
- SITE SURVEY MODE: PERFORMED ONCE (BY CMD) DURING EARLY OPERATIONS. ALL THREE SENSORS ALIGNED, IN SEQUENCE, TO THE X, Y, & Z AXES. PURPOSE OF SITE SURVEY IS TO IDENTIFY & LOCATE ANY MAGNETIC INFLUENCES PERMANENTLY INHERENT IN THE DEPLOYMENT SITE. THUS, THEIR EFFECTS (LOCAL FIELD GRADIENT) CAN BE CONSIDERED IN THE INTERPRETATION OF NORMAL SCIENTIFIC DATA
- CALIBRATION MODE: PERFORMED BY CMD OR AUTOMATICALLY (AT 12-HR INTERVALS) VIA ALSEP TIMER. PURPOSE OF CALIBRATION IS TO DETERMINE ABSOLUTE ACCURACY OF THE MAGNETIC SENSORS & CORRECT ANY DRIFT FROM THEIR LABORATORY CALIBRATION (DUE POSSIBLY TO RESIDUAL MAGNETIC PERMS ON THE SENSORS)

LSM FUNCTIONAL DIAGRAM

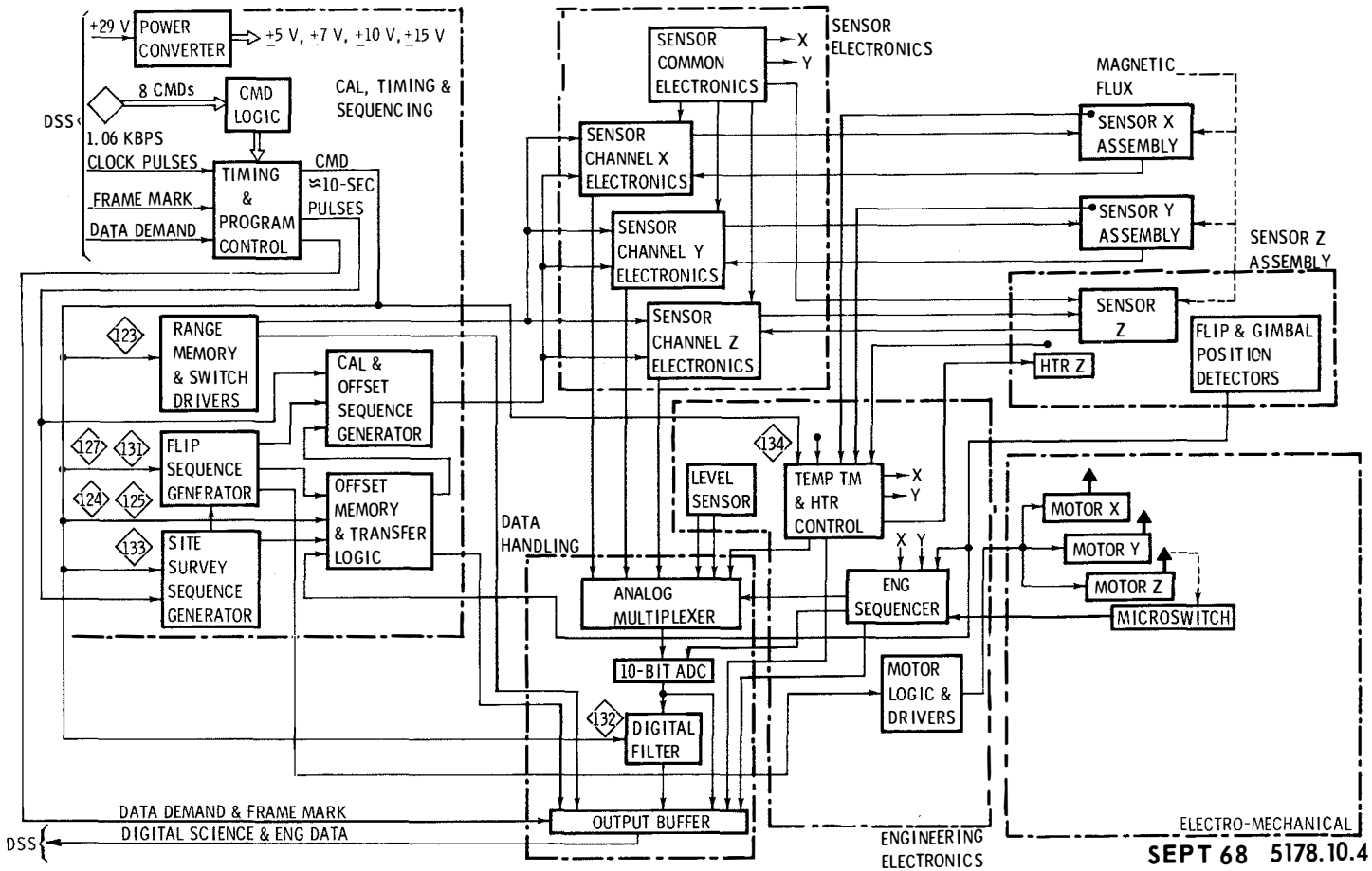

SEPT 68 5178.10.4

LSM ELECTRO-MECHANICAL

- ANGLE DEFINITIONS:
  FLIP MOTION ROTATES SENSORS +180° IN THESE PLANES (FIRST +90° OF ROTATION SHOWN) & -180° RETURNS SENSOR TO ORIGINAL SETTING. AFTER GIMBAL MOTION, FLIP MOTION IS IN DIFFERENT PLANE

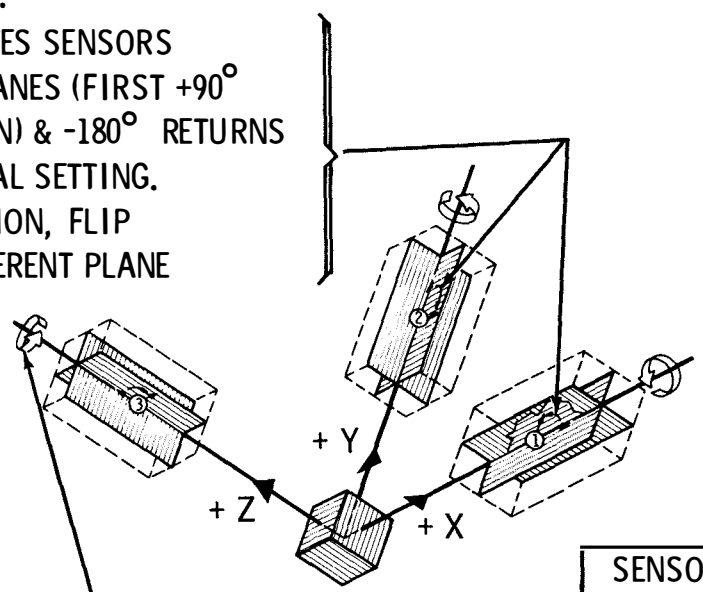

GIMBAL MOTION ROTATES SENSORS +90° IN THESE DIRECTIONS (ONCE FOR EACH SENSOR)

- STRUCTURAL SUPPORT
- SENSOR ARMS (BOOMS)
- ORIENTATION MECHANISMS
- MOTORS, STOPS

	SENSOR DIRECTION FOR 0 → + 90° → + 180° FLIP	
SENSOR	PRE-GIMBAL	POST-GIMBAL
X ①	+ X → + Y → - X	+ X → + Z → - X
Y ②	+ Y → + X → - Y	+ Y → + Z → - Y
Z ③	+ Z → + X → - Z	+ Z → + Y → - Z

SEPT 68 5178.10.5

LSM EGFU AND SENSOR ARM

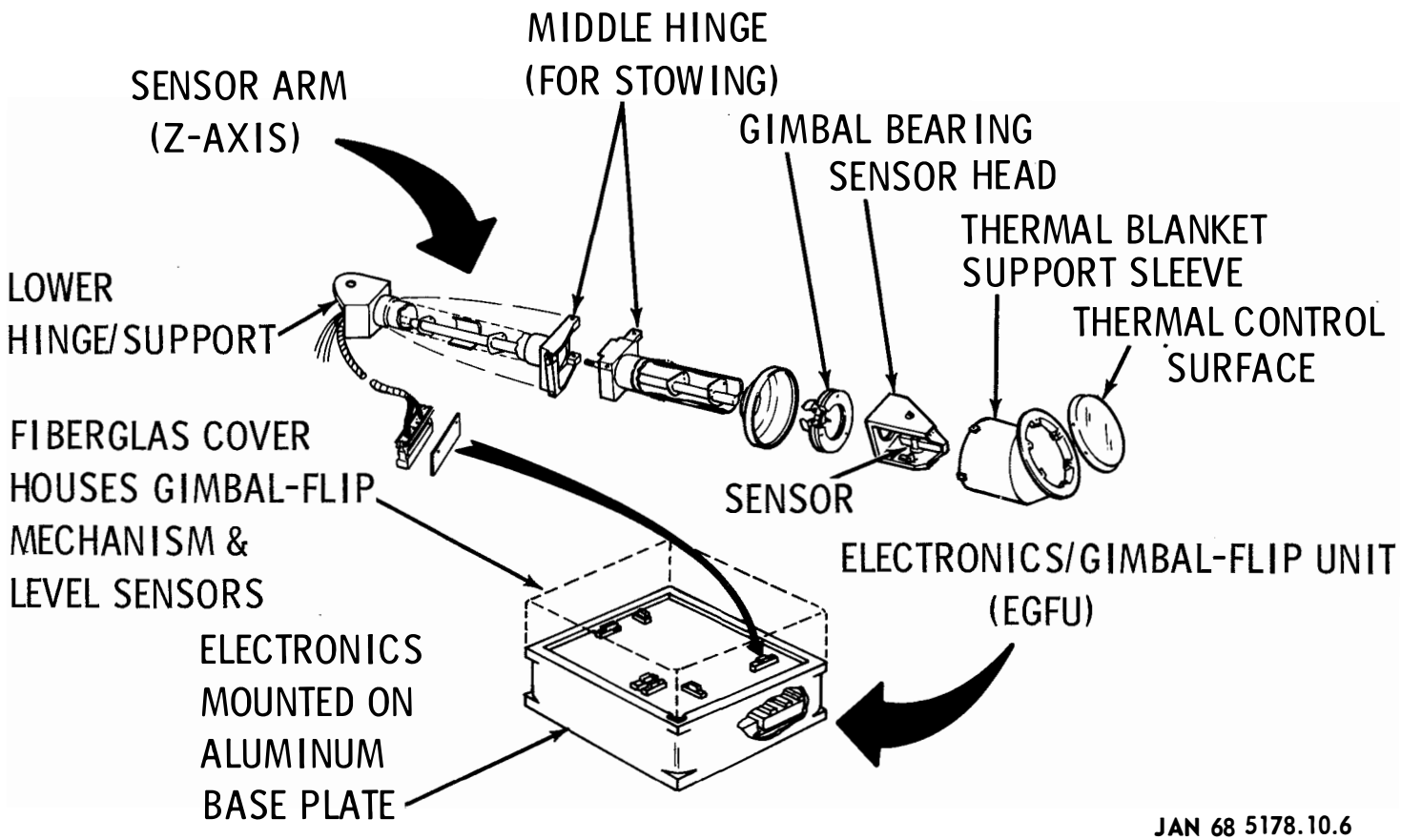

JAN 68 5178.10.6

LSM ORIENTATION MECHANISM

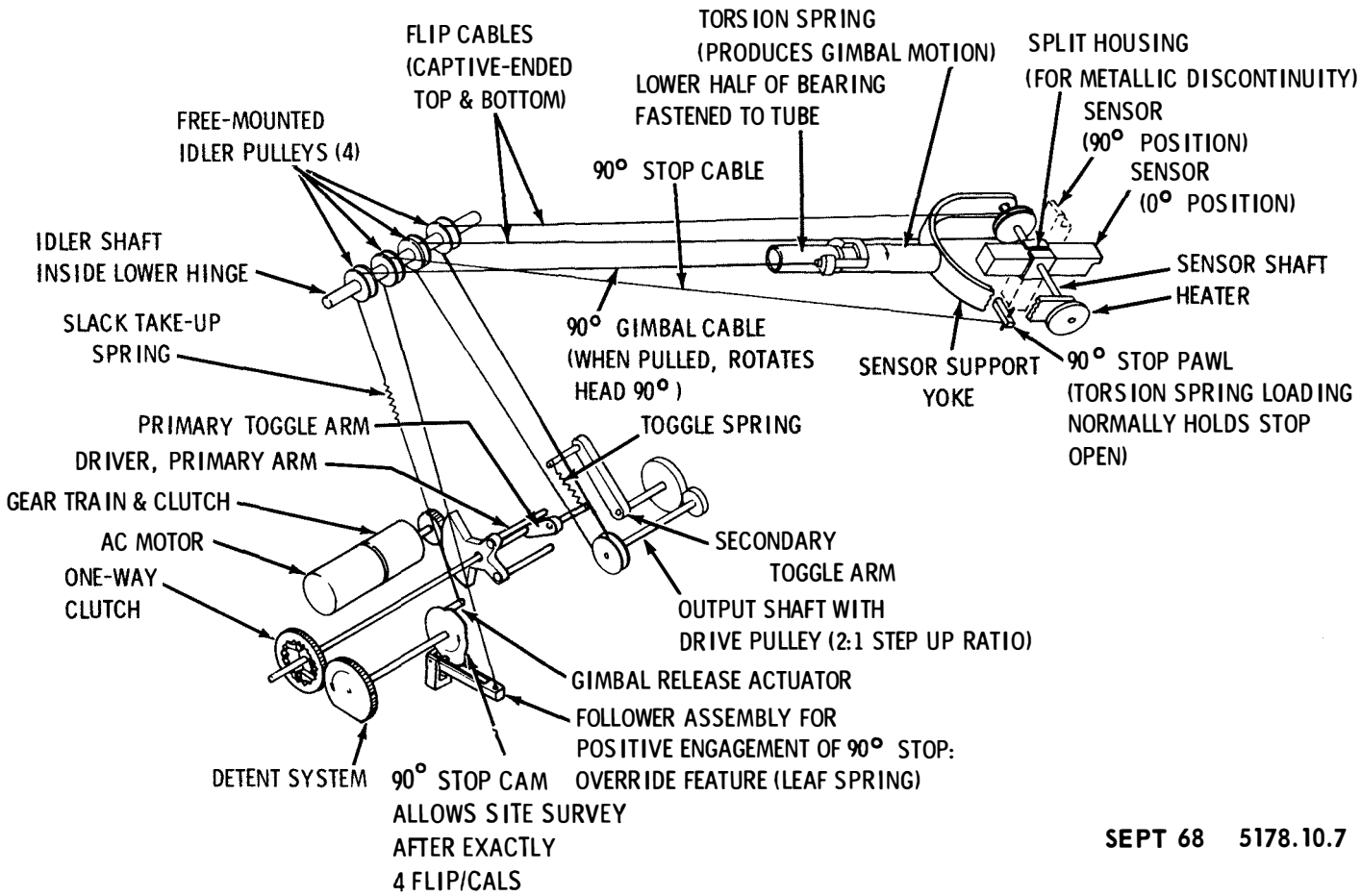

SEPT 68 5178.10.7

LSM MOTORS, STOPS, AND PISTONS

MOTORS: FLIPPING OF SENSORS IS POWERED BY INDIVIDUAL 400 ~, 2 ϕ AC MOTORS (PHASE REVERSAL CAUSES MOTOR MOTION REVERSAL)

FLIP MOTION STOPS: THREE STOPS IN EACH SENSOR'S SUPPORT YOKE

- FIXED STOPS AT 0° & 180° (FLIP & SURVEY) } FOR ACCURATE CONTROL
- RETRACTABLE STOP AT 90° (SURVEY ONLY) } OF SENSOR POSITION

RETRACTABLE STOP:

- CONTROLLED BY CAM & FOLLOWER ASSEMBLY
- SPRING LOADED IN RETRACTED POSITION (OPEN)
- POWER FOR STOP INSERTION (CLOSED) FROM FLIP MOTOR VIA CAM/FOLLOWER
- USED ONCE (DURING SITE SURVEY) & THEN PERMANENTLY RETRACTED

GIMBAL MOTION: ROTATION OF SENSOR SUPPORT YOKE ABOUT SUPPORT ARM AXIS

- CONTROLLED BY GEAR TRAIN FROM FLIP MOTOR
- POWERED BY PRESET TORSION SPRING IN SENSOR ARM
- PERFORMED ONCE (SENSOR YOKE ROTATES 90°) DURING SITE SURVEY
- FLIP MOTION, 0° TO 180° & BACK, CAN BE PERFORMED IN EITHER SETTING (PRE-GIMBAL OR POST-GIMBAL)

LSM FLUX MEASUREMENT

- FLUX GATE MAGNETIC SENSORS, IN CONJUNCTION WITH SENSOR ELECTRONICS, PROVIDE ANALOG SIGNAL OUTPUTS PROPORTIONAL TO THE INTENSITY OF INCIDENT MAGNETIC FIELD COMPONENTS PARALLEL TO THE SENSORS
- CONVERSION SENSITIVITY: 20μ VOLTS PER γ AT 10 Hz
- SENSOR ELECTRONICS:
  - PROVIDES FUNDAMENTAL POWER (WITH NEGLIGIBLE SECOND HARMONIC) TO EXCITE THE FLUXGATE SENSORS
  - ACCEPTS SENSOR OUTPUT SIGNALS, SELECTING & AMPLIFYING ONLY THE SECOND HARMONIC COMPONENT
  - DEMODULATES THIS TO PROVIDE ANALOG OUTPUTS (FREQUENCY RESPONSE: DC TO 50 Hz)
  - PROVIDES FEEDBACK CURRENT TO THE SENSORS FROM THE ANALOG OUTPUTS
  - GENERATES FUNDAMENTAL & SECOND HARMONIC REFERENCE SQUARE WAVES (5.9625 & 11.925 KHz) DERIVED FROM 1.06 KHz ALSEP CLOCK PULSES

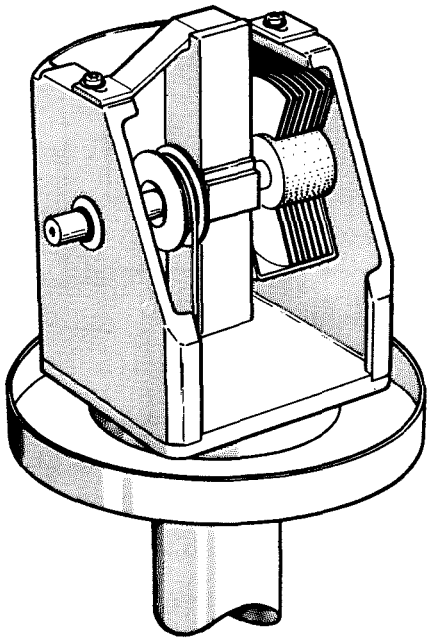

JAN 68 5178.10.9

LSM SENSOR ELECTRONICS

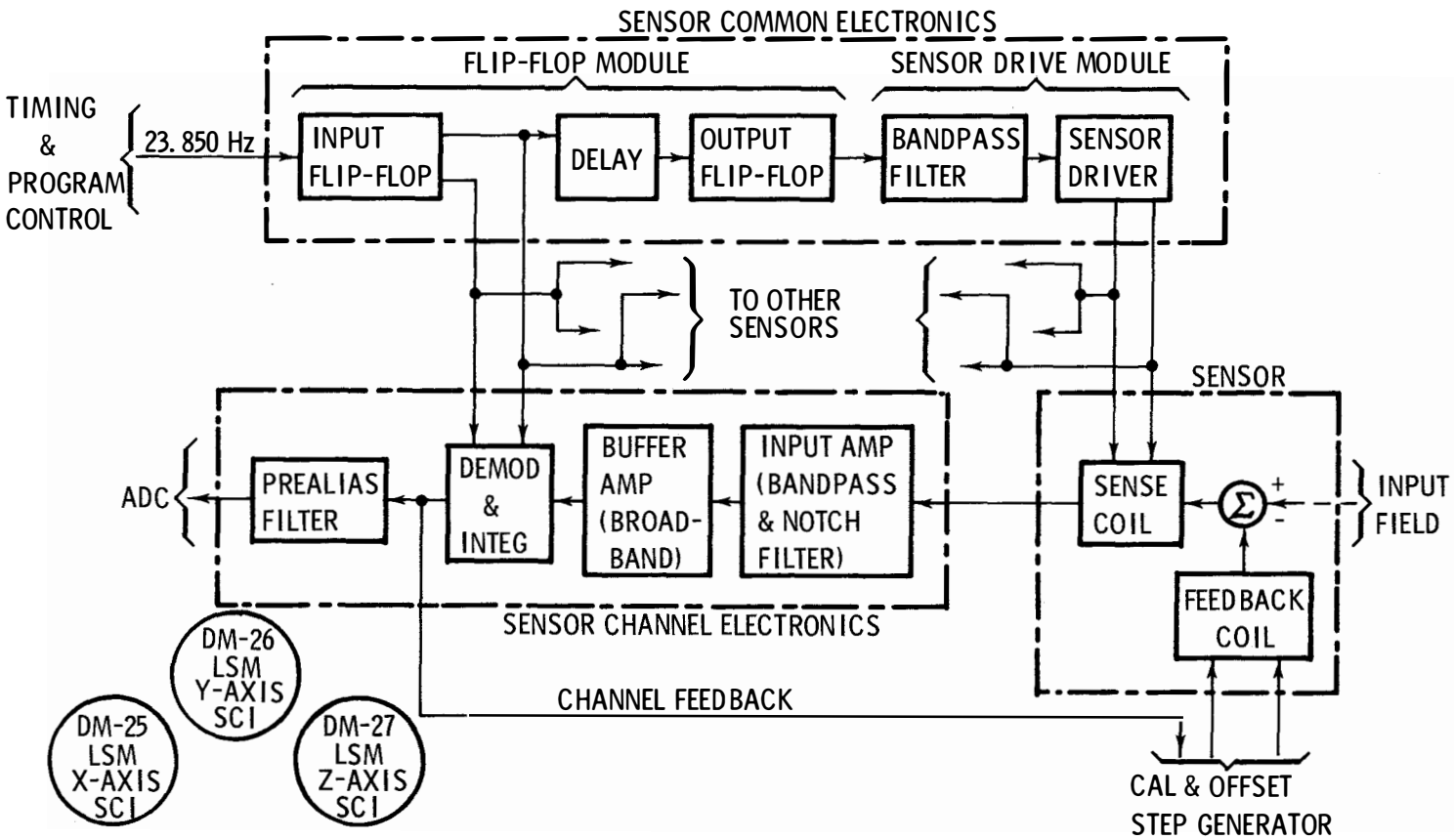

JAN 68 5178.10.10

LSM CAL, TIMING, AND SEQUENCING

- RANGE COMMAND
- RANGE MEMORY & SWITCH DRIVERS
  - OFFSET COMMANDS
  - OFFSET MEMORY & TRANSFER LOGIC
    - TIMING & PROGRAM CONTROL
      - FLIP/CAL COMMANDS
      - FLIP/CAL SEQUENCE
        - CAL & OFFSET GENERATOR
          - SITE SURVEY COMMAND
          - SITE SURVEY SEQUENCE
            - POWER CONVERTER
            - POWER PROFILE

JAN 68 5178.10.11

LSM RANGE COMMAND AND FUNCTION

OCTAL CMD NUMBER

123 LSM RANGE STEPS

THIS IS A 3-STATE CMD THAT DETERMINES THE FULL-SCALE RANGE OF THE THREE SENSORS (X, Y & Z). LSM ACTIVATION PRESETS THE RANGE TO $\pm 400\gamma$. REPEATED TRANSMISSION OF THIS CMD STEPS THE RANGE THROUGH SEQUENTIAL VALUES ($\pm 400\gamma$, $\pm 100\gamma$, $\pm 200\gamma$, $\pm 400\gamma$, ETC.) THE SELECTED RANGE IS COMMON TO ALL 3 SENSORS.

FUNCTION

RANGE MEMORY & SWITCH DRIVERS

- MEMORY REGISTER, ADVANCED BY CMD 123, PROVIDES FOR SELECTION OF APPROPRIATE SWITCH DRIVERS
- SWITCH DRIVERS ACTIVATE SWITCHES IN CAL & OFFSET GENERATOR TO CONTROL SENSOR RANGE (BY MODIFYING GAIN IN FEEDBACK)
- REGISTER SETTING ALSO APPEARS IN LSM DATA

JAN 68 5178.10.12

LSM OFFSET COMMAND & MEMORY

OCTAL CMD NUMBER

124 LSM FLD O/S CH

THIS IS A 7-STATE CMD CONTROLLING FIELD OFFSET PERCENTAGE INDEPENDENTLY FOR EACH OF THE THREE SENSORS (X, Y & Z). LSM ACTIVATION PRESETS THE OFFSET TO 0%. REPEATED TRANSMISSION OF THIS CMD ADVANCES THE OFFSET THROUGH SEQUENTIAL VALUES (+25%, +50%, +75%, -75%, -50%, -25%, 0%, ETC.) PRECENTAGES ARE REFERENCED TO THE CURRENT FULL-SCALE RANGE AS SELECTED BY CMD 123 (EXAMPLE: WITH RANGE SET AT $\pm$ 100 γ BY CMD 123 & OFFSET AT + 25%, FOR A PARTICULAR SENSOR, THE RESULTING RANGE FOR THAT SENSOR WOULD BE FROM - 75 γ TO + 125 γ).

125 LSM O/S ADD CH

THIS IS A 4-STATE CMD USED TO ADDRESS THE THREE SENSORS (X, Y & Z) FOR OFFSETTING. LSM ACTIVATION PRESETS THE ADDRESS TO NEUTRAL (NO SENSOR IS ADDRESSED). REPEATED TRANSMISSION OF THIS CMD ADVANCES THE ADDRESS SEQUENTIALLY THROUGH X, Y, Z, NEUTRAL, ETC. (EXAMPLE: WITH ADDRESS SET BY CMD 125 to Y SENSOR, THE NEXT TRANSMISSION OF CMD 124 ADVANCES THE Y-SENSOR OFFSET ONE STEP WITHOUT AFFECTING THE X & Z SENSORS

- OFFSET MEMORY & TRANSFER LOGIC STORES, IN RESPONSE TO CMDs 124 & 125, ONE OF THE 7 OFFSET (BIAS) LEVELS FOR EACH OF THE 3 SENSOR CHANNELS (X, Y & Z)
- STORED IN BINARY FORM IN A FLIP-FLOP MEMORY WHOSE OUTPUT STATES DRIVE THE APPROPRIATE OFFSET SWITCHES IN THE CAL & OFFSET GENERATOR
- MEMORY SETTING ALSO APPEARS IN LSM DATA
- TRANSFER LOGIC RECEIVES SENSOR POSITION DATA (FLIP & GIMBAL) & DERIVES APPROPRIATE SWITCH INPUTS (OFFSET LEVEL & POLARITY). EXAMPLE: DURING FLIP/CAL WHEN SENSOR ROTATES 180°, OFFSET POLARITY IS REVERSED. SIMILARLY, DURING X SITE SURVEY WHEN Y & Z SENSORS FLIP 90° (PARALLEL TO X AXIS) THEY ARE GIVEN THE X-AXIS OFFSET

LSM TIMING AND PROGRAM CONTROL

- GENERATES ALL TIMING & SYNCHRONIZATION SIGNALS NECESSARY TO SYNCRONIZE THE DATA PROCESSING & SEQUENCING
- CONTAINS INTERNAL (COUNT-DOWN) CLOCK WHICH GENERATES TIMING SIGNALS FOR FLIP/CAL & SITE SURVEY SEQUENCES ($\approx$10-SEC INTERVALS)

NOTE: LSM TIMING & FILTERING MATCHED TO ALSEP NORMAL BIT RATE (1.06 KBPS) & WILL NOT PRODUCE VALID DATA AT SLOW RATE (0.53 KBPS)

LSM FLIP/CAL

OCTAL CMD NUMBER

127 FLIP/CAL INHIB

THIS IS A 2-STATE CMD (IN/OUT) USED TO INHIBIT THE FLIP/CAL SEQUENCE OF THE LSM. LSM ACTIVATION PRESETS THE LOGIC SO THAT FLIP/CAL IS INHIBITED. REPEATED TRANSMISSION OF THIS CMD STEPS THE SYSTEM BACK & FORTH BETWEEN INHIBIT IN & OUT. SINCE THE INHIBITED STATE ALSO PREVENTS FLIP/CAL VIA THE ALSEP TIMER (EVERY 12 HRS), THIS CMD MUST BE CONSIDERED CRITICAL (POSSIBILITY OF ALSEP LOSING UPLINK CAPABILITY)

131 FLIP/CAL GO

THIS IS A 1-STATE CMD TO INITIATE A FLIP/CAL SEQUENCE, UNLESS INHIBITED AS A RESULT OF CMD 127. ALSEP TIMER ALSO INITIATES FLIP/CAL SEQUENCE EVERY 12 HRS (UNLESS FLIP/CAL IS INHIBITED OR TIMER IS INHIBITED). UPON COMPLETION OF FLIP/CAL, LSM RETURNS TO NORMAL (SCIENTIFIC) MODE & SEQUENCER SHUTS OFF. NOTE: THERE MUST BE EXACTLY 4 FLIP/CAL SEQUENCES BEFORE SITE SURVEY.

FLIP SEQUENCE GENERATOR

1. TRIGGERS CALIBRATION PORTION OF CAL & OFFSET GENERATOR TO APPLY SERIES OF CAL STEPS (RASTER) SIMULTANEOUSLY TO ALL 3 SENSORS ($\approx$160 SEC)
2. APPLIES POWER TO X MOTOR CAUSING X SENSOR FLIP ($\approx$10 SEC)
3. AFTER 10 SEC POWER TO X MOTOR IS SWITCHED OFF & Y MOTOR ON
4. REPEAT STEPS 2 & 3 FOR Y MOTOR, SWITCHING TO Z UPON COMPLETION
5. REPEAT STEP 2 FOR Z MOTOR
6. CAL RASTER INITIATED AND APPLIED SIMULTANEOUSLY TO ALL 3 SENSORS ($\approx$160 SEC)
7. SIGNAL (CAL COMPLETE) TURNS OFF POWER TO FLIP SEQUENCE GENERATOR

NOTES: A. OFFSET MEMORY & TRANSFER LOGIC REVERSES POLARITY OF EACH OFFSET WHEN ACTIVATED BY CHANGE IN FLIP POSITION DETECTORS (OFFSET ALSO APPEARS IN LSM DATA)

B. SPECIAL FLIP MOTIONS INITIATED ON DEMAND FROM SITE SURVEY SEQUENCE GENERATOR

LSM CAL AND OFFSET FUNCTION

- RANGE SELECTION: CHANGES SENSOR FEEDBACK GAIN
- % OFFSET (BIAS): } INSERTED IN FEEDBACK LOOP OF
- CALIBRATION (RASTER): } SENSOR ELECTRONICS
- FEEDBACK CIRCUIT PROVIDES:
  - ACCURATE SUMMATION OF OFFSET, CALIBRATION, & FEEDBACK (DEMOD + INTEG) VOLTAGES AT ALL COMBINATIONS OF SIGNALS
  - LINEAR DRIVE OF FLUXGATE SENSOR FEEDBACK WINDING OVER WIDE DYNAMIC RANGE

- OFFSET GENERATOR: SWITCH DRIVERS (ONE SET FOR EACH SENSOR CHANNEL) CONTROLLED BY OFFSET MEMORY & TRANSFER LOGIC; ACTIVATE LADDER NETWORKS (7 STATES)
- CALIBRATION SEQUENCE GENERATOR:
  - GENERATES TWO IDENTICAL SEQUENCES (BEFORE & AFTER FLIP)
  - EACH SEQUENCE HAS 14 STEPS OF ≈ 10 SEC/STEP (≈ 10-SEC CLOCK PULSES FROM TIMING & PROGRAM CONTROL)
  - EACH STEP ACTIVATES SWITCH DRIVER FOR SWITCHES IN CALIBRATION (LADDER) NETWORK OF CAL & OFFSET STEP GENERATOR
  - UPON COMPLETION OF SECOND SEQUENCE (AFTER FLIP) CLOCK INPUT IS INHIBITED & SIGNAL (CAL COMPLETE) IS SENT TO FLIP SEQUENCE GENERATOR

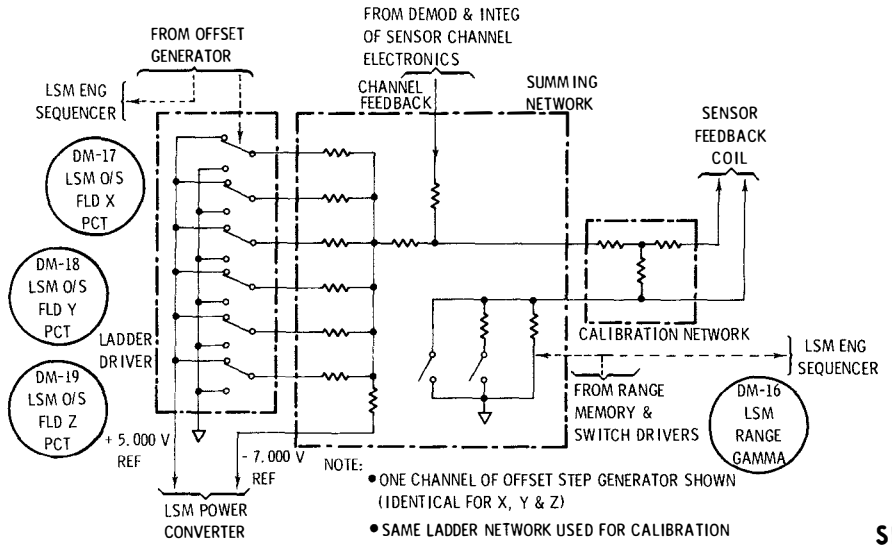

NOTE:
- ONE CHANNEL OF OFFSET STEP GENERATOR SHOWN (IDENTICAL FOR X, Y & Z)
- SAME LADDER NETWORK USED FOR CALIBRATION

SEPT 68 5178.10.16

LSM SITE SURVEY (GENERAL)

OCTAL CMD NUMBER

133 SITE SURVEY XYZ

THIS IS A 1-STATE CMD TRANSMITTED THREE TIMES, IN SUCCESSION, TO ACTIVATE THE SITE SURVEY SEQUENCE GENERATOR. THE FIRST TRANSMISSION INITIATES THE SURVEY IN THE X-AXIS DIRECTION. UPON COMPLETION OF THE X-AXIS SEQUENCE, THE LSM RETURNS TO THE SCIENTIFIC (NORMAL) MODE OF OPERATION. THE SECOND AND THIRD TRANSMISSIONS OF THIS CMD INITIATE SURVEYS IN THE Y-AXIS & Z-AXIS DIRECTIONS, RESPECTIVELY, & AFTER EACH SURVEY THE LSM RETURNS TO THE SCIENTIFIC (NORMAL) MODE OF OPERATION. THE COMPLETE SITE SURVEY SEQUENCE IS PERFORMED ONLY ONCE. IT MUST BE PRECEDED BY EXACTLY 4 FLIP/CAL SEQUENCES.

- TO ACCOMPLISH SITE SURVEY, ALL THREE SENSORS ARE ALIGNED PARALLEL TO THE X-AXIS DIRECTION, Y-AXIS DIRECTION, & Z-AXIS DIRECTION (3 SUBSEQUENCES)
- USES COMBINATIONS OF PARTIAL (90°) FLIP MOTION & GIMBAL MOTION
- CONTROLLED BY SITE SURVEY SEQUENCE GENERATOR WHICH USES TIMING PULSES FROM TIMING & PROGRAM CONTROL
- OPERATES THROUGH FLIP SEQUENCE GENERATOR TO ACTIVATE FLIP MOTORS (MOTORS ALSO ACTUATE GIMBAL MOTION)
- 90° FLIP IS PROGRAMMED THROUGH CAMS & CAM FOLLOWERS
- POSITION DETECTORS (THROUGH OFFSET MEMORY & TRANSFER LOGIC) APPLY APPROPRIATE OFFSETS TO EACH SENSOR
- POSITION DETECTORS ALSO HAVE OUTPUTS IN LSM DATA
- DETENT SYSTEM PERMANENTLY DISENGAGES CAM TOGGLING MECHANISM SO THAT 90° FLIP CAN NOT OCCUR AFTER COMPLETION OF SITE SURVEY
- CONTROLS SITE SURVEY (3 SUBSEQUENCES) IN RESPONSE TO 3 SUCCESSIVE GROUND CMDs
- CONSISTS OF A BINARY COUNTER WHICH STEPS ONE STEP AT THE COMPLETION OF EACH OPERATION
- COUNTER OUTPUTS ARE GATED; COINCIDENCE SIGNALS ACTIVATE THE FOLLOWING:
  - FLIP MOTOR POWER SWITCHING (3 MOTORS, EACH FWD & REVERSE)
  - CALIBRATION SEQUENCE INTIATION
  - SEQUENCE INHIBIT

LSM X-AXIS SURVEY

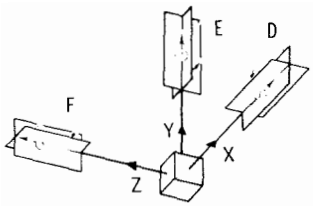

INITIAL POSITION
& FIRST ROTATIONS

A. SENSORS INITIALLY IN SCIENTIFIC ORIENTATION (OUTWARD ALONG AXES) AS SHOWN AT LEFT
B. TRANSMIT FIRST SITE SURVEY CMD

FLIP/CAL SEQUENCE

C. FLIP/CAL CYCLE CALIBRATES ALL SENSORS, THEN FLIPS IN SEQUENCE (+180°)
D. X-AXIS SENSOR IN X-Y PLANE (X→Y→-X)
E. Y-AXIS SENSOR IN X-Y PLANE (Y→X→-Y) } SET 90° STOP
F. Z-AXIS SENSOR IN Z-X PLANE (Z→X→-Z) } SET 90° STOP
G. ALL SENSORS ARE CALIBRATED AGAIN IN THE NEW POSITION

NEXT ROTATIONS
& SURVEY POSITION

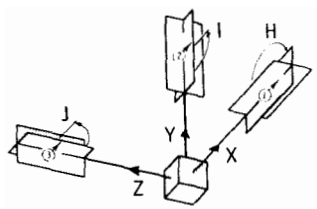

H. X-AXIS SENSOR FLIPS - 180° (-X→Y→X)
I. Y-AXIS SENSOR FLIPS -90°, ENGAGING STOP (-Y→X)
J. Z-AXIS SENSOR FLIPS -90°, ENGAGING STOP (-Z→X)
K. SENSORS ARE ALL ORIENTED IN X-DIRECTION (FOR X-AXIS SITE SURVEY) AS SHOWN AT RIGHT

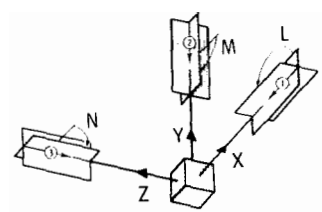

FINAL ROTATIONS
& END POSITIONS

L. AFTER COLLECTING X-AXIS SURVEY DATA FOR ≈150 SEC, X-AXIS SENSOR FLIPS -180° (X→Y→-X)

M. Y-AXIS SENSOR FLIPS +90°, RELEASING STOP (X→-Y)
N. Z-AXIS SENSOR FLIPS +90°, RELEASING STOP (X→-Z)
O. SENSORS ARE NOW IN SCIENTIFIC ORIENTATION (REVERSED) AS SHOWN AT LEFT AND WILL REMAIN THERE UNTIL NEXT GROUND CMD IS TRANSMITTED

THIS COMPLETES SUBSEQUENCE 1 OF SITE SURVEY

LSM Y-AXIS SURVEY

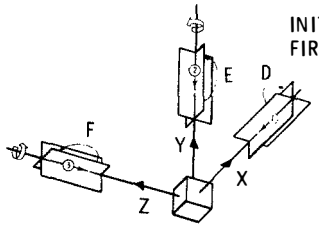

INITIAL POSITION & FIRST ROTATIONS

A. SENSORS INITIALLY IN SCIENTIFIC ORIENTATION (INWARD ALONG AXES) AS SHOWN AT LEFT
B. TRANSMIT SECOND SITE SURVEY CMD

FLIP/CAL SEQUENCE

C. FLIP/CAL CYCLE CALIBRATES ALL SENSORS, THEN FLIPS IN SEQUENCE (-180°)
D. X-AXIS SENSOR IN X-Y PLANE (-X→Y→X)
E. Y-AXIS SENSOR (-Y→X/Z→Y) INC 90° GIMBAL ROTATION
F. Z-AXIS SENSOR (-Z→X/Y→Z) INC 90° GIMBAL ROTATION
G. ALL SENSORS ARE CALIBRATED AGAIN IN THE NEW POSITION

NEXT ROTATIONS & SURVEY POSITION

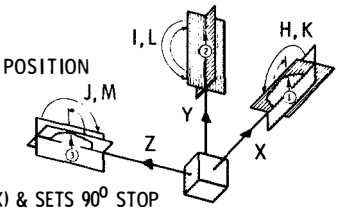

H. X-AXIS SENSOR FLIPS +180° (X→Y→-X) & SETS 90° STOP
I. Y-AXIS SENSOR FLIPS +180° (Y→Z→-Y)
J. Z-AXIS SENSOR FLIPS +180° (Z→Y→-Z) & SETS 90° STOP
K. X-AXIS SENSOR FLIPS -90°, ENGAGING STOP (-X→Y)
L. Y-AXIS SENSOR FLIPS -180° (-Y→Z→Y)
M. Z-AXIS SENSOR FLIPS -90°, ENGAGING STOP (-Z→Y)
N. SENSORS ARE ALL ORIENTED IN Y-DIRECTION (FOR Y-AXIS SITE SURVEY) AS SHOWN AT RIGHT

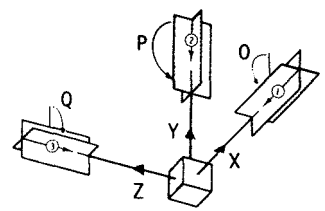

FINAL ROTATIONS & END POSITION

O. AFTER COLLECTING Y-AXIS SITE SURVEY DATA FOR ≈150 SEC, X-AXIS SENSOR FLIPS +90°, RELEASING STOP (Y→-X)
P. Y-AXIS SENSOR FLIPS +180° (Y→Z→-Y)
Q. Z-AXIS SENSOR FLIPS +90°, PERMANENTLY RELEASING STOP (Y→-Z)
R. SENSORS ARE NOW IN SCIENTIFIC ORIENTATION (REVERSED) AS SHOWN AT LEFT & WILL REMAIN THERE UNTIL NEXT GROUND CMD IS TRANSMITTED

THIS COMPLETES SUBSEQUENCE 2 OF SITE SURVEY

LSM Z-AXIS SURVEY

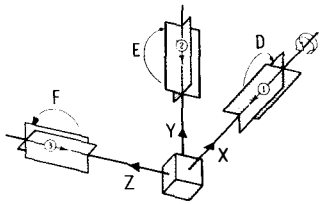

INITIAL POSITION
& FIRST ROTATIONS

A. SENSORS INITIALLY IN SCIENTIFIC ORIENTATION (INWARD ALONG AXES) AS SHOWN AT LEFT
B. TRANSMIT THIRD SITE SURVEY CMD

FLIP/CAL SEQUENCE

C. FLIP/CAL CYCLE CALIBRATES ALL SENSORS, THEN FLIPS IN SEQUENCE (-180^0)
D. X-AXIS SENSOR (-X→Y/Z→X) INC 90° GIMBAL ROTATION
E. Y-AXIS SENSOR IN Y-Z PLANE (-Y→Z→Y)
F. Z-AXIS SENSOR IN Y-Z PLANE (-Z→Y→Z)
G. ALL SENSORS ARE CALIBRATED AGAIN IN THE NEW POSITION

NEXT ROTATIONS & SURVEY POSITION

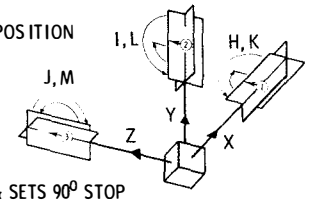

H. X-AXIS SENSOR FLIPS $+180^0$ (X→Z→-Z) & SETS 90^0 STOP
I. Y-AXIS SENSOR FLIPS $+180^0$ (Y→Z→-Y) & SETS 90^0 STOP
J. Z-AXIS SENSOR FLIPS $+180^0$ (Z→Y→-Z)
K. X-AXIS SENSOR FLIPS -90^0, ENGAGING STOP (-X→Z)
L. Y-AXIS SENSOR FLIPS -90^0, ENGAGING STOP (-Y→Z)
M. Z-AXIS SENSOR FLIPS -180^0 (-Z→Y→Z)
N. SENSORS ARE ALL ORIENTED IN Z-DIRECTION (FOR Z-AXIS SITE SURVEY) AS SHOWN AT RIGHT

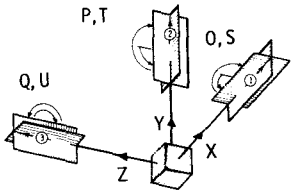

FINAL ROTATIONS & END POSITIONS

O. AFTER COLLECTING Z-AXIS SURVEY DATA FOR ≈150 SEC, X-AXIS SENSOR FLIPS -90^0, PERMANENTLY RELEASING STOP (Z→-X)
P. Y-AXIS SENSOR FLIPS -90^0, PERMANENTLY RELEASING STOP (Z→-Y)
Q. Z-AXIS SENSOR FLIPS -180^0 (Z→Y→-Z)
R. FLIP/CAL CYCLE CALIBRATES ALL SENSORS, THEN FLIPS IN SEQUENCE (-180^0)
S. X-AXIS SENSOR IN X-Z PLANE (-X→Z→X)
T. Y-AXIS SENSOR IN Y-Z PLANE (-Z→Y→Z)
U. Z-AXIS SENSOR IN Y-Z PLANE (-Z→Y→Z)

V. FINAL CALIBRATION OF ALL SENSORS IN NEW POSITION
- SENSORS ARE IN SCIENTIFIC ORIENTATION AS SHOWN AT LEFT & WILL NOT PERFORM ANY MORE 90^0 FLIPS OR GIMBAL ROTATIONS (FLIP/CAL BY CMD OR TIMER)
- ALL POWER TO SITE SURVEY SEQUENCER IS CUT OFF (COMPLETION OF SUBSEQUENCE 3 & SITE SURVEY)

LSM FAIL-SAFE PROVISIONS

- IF FLIP MECHANISM OR INDICATOR MALFUNCTIONS, 10-SEC TIMER TURNS OFF MOTOR AND ADVANCES SEQUENCE TO NEXT STEP (PARTIAL FAILURE, AT WORST)
- DETENT SYSTEM DISENGAGES 90° STOP CAM AND GIMBAL RELEASE AT END OF SITE SURVEY (NOT USED THEREAFTER)

LSM POWER CONVERTER

- CONVERTS ALSEP +29V INPUT TO 8 REGULATED OUTPUTS (±5V, ±7V, ±10V, ±15V)
- PROVIDE SWITCHING TO REMOVE POWER FROM VARIOUS PORTIONS OF LSM ELECTRONICS WHEN THEY ARE ON INACTIVE STANDBY
- A POWER FILTER MODULE IS INCLUDED IN THE SENSOR COMMON ELECTRONICS FOR CERTAIN PRECISION REQUIREMENTS

LSM POWER PROFILE

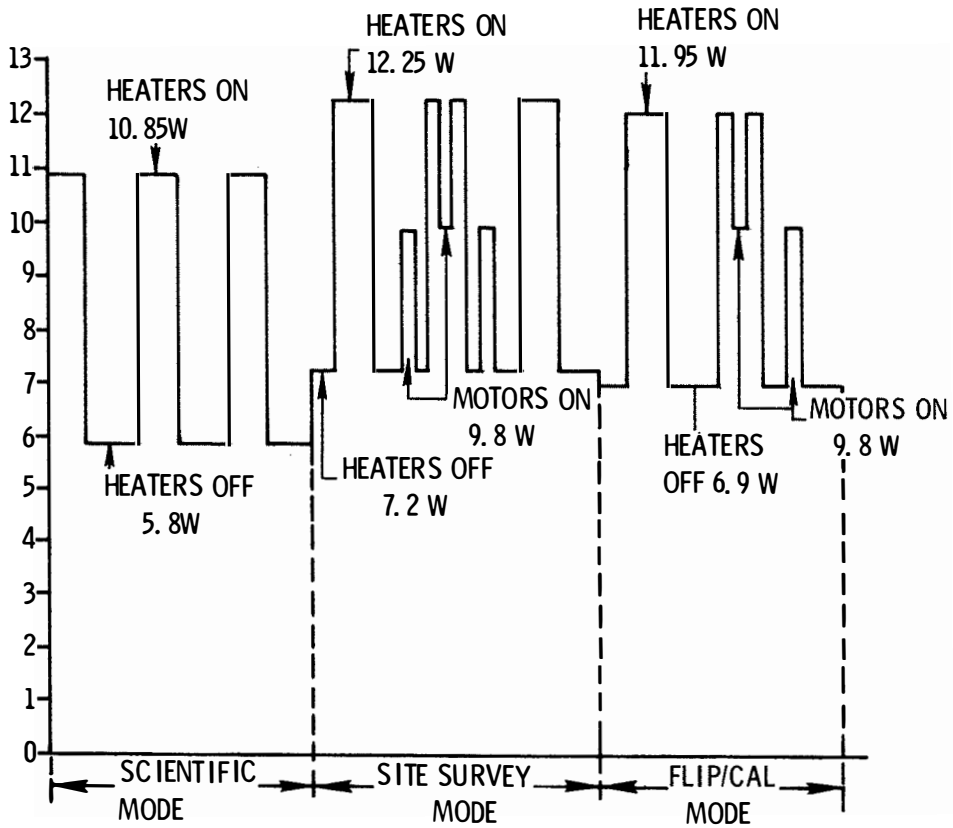

APR 69 5178.10.23

LSM ENGINEERING ELECTRONICS

- TEMPERATURE CONTROL CMD & FUNCTION
- MOTOR DRIVERS
- FLIP & GIMBAL POSITION DETECTORS
- LEVEL SENSOR
- ENG SEQUENCER

LSM TEMPERATURE CONTROL

SENSORS

- SENSORS HOUSED IN FIBERGLAS STRUCTURAL JACKET
- WRAPPED WITH INSULATION EXCEPT UPPER (HORIZONTAL) SURFACE
- UPPER SURFACE IS HEAT RADIATOR
- 3 TEMP SENSORS (X, Y, & Z) FOR TM : X OR Y SELECTED (BY CMD) FOR HEATER CONTROL
- INDIVIDUAL 1-WATT HEATERS

EGFU

- 2-SECTION PACKAGE (TOP & BOTTOM) WITH ALUMINUM BASE PLATE IN MIDDLE
- ELECTRO-MECHANICAL ON TOP & ELECTRONICS ON BOTTOM MOUNTED ON PLATE (CONDUCTIVE THERMAL TRANSFER)
- PLATE COUPLED TO PRA (THERMAL RADIATORS) ON 2 SIDES OF EGFU (N&S)
- TOP OF EGFU HAS FIBERGLAS COVER
- ALUMINIZED KAPTON INSULATION OVER ALL SURFACES EXCEPT RADIATORS
- 2 TEMP SENSORS IN TM
- 2.3-WATT HEATER

OPERATING RANGE: -30°C TO +65°C
NO STBY (SURVIVAL) POWER CONNECTION

OCTAL CMD NUMBER

134 LSM T CTL XYO

THIS IS A 3-STATE COMMAND (X, Y, OFF) WHICH IS USED TO SELECT ONE OF TWO TEMP SENSORS FOR HEATER CONTROL OR TO DEACTIVATE THE HEATER POWER. ALL 4 HEATERS ARE CONTROLLED IN PARALLEL BY EITHER OF TWO TEMP SENSORS (ONE IN THE SENSOR X ASSEMBLY & ONE IN THE SENSOR Y ASSEMBLY). LSM ACTIVATION PRESETS TO THE X STATE. REPEATED TRANSMISSION OF THIS CMD ADVANCES THE STATE SEQUENTIALLY THROUGH Y, OFF, X, ETC. IN THE OFF STATE, ALL POWER TO ALL 4 HEATERS IS REMOVED.

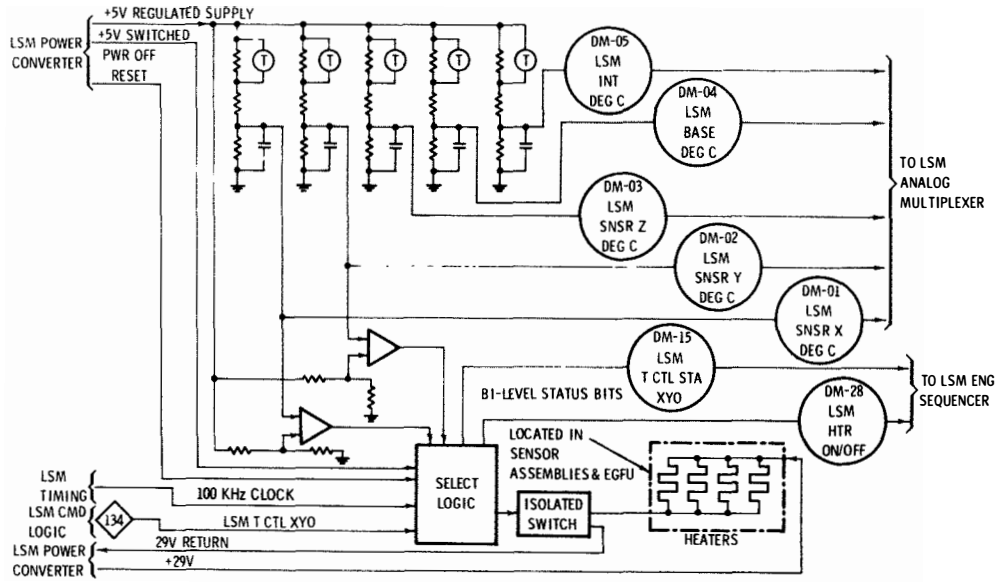

LSM MOTOR LOGIC AND DRIVERS

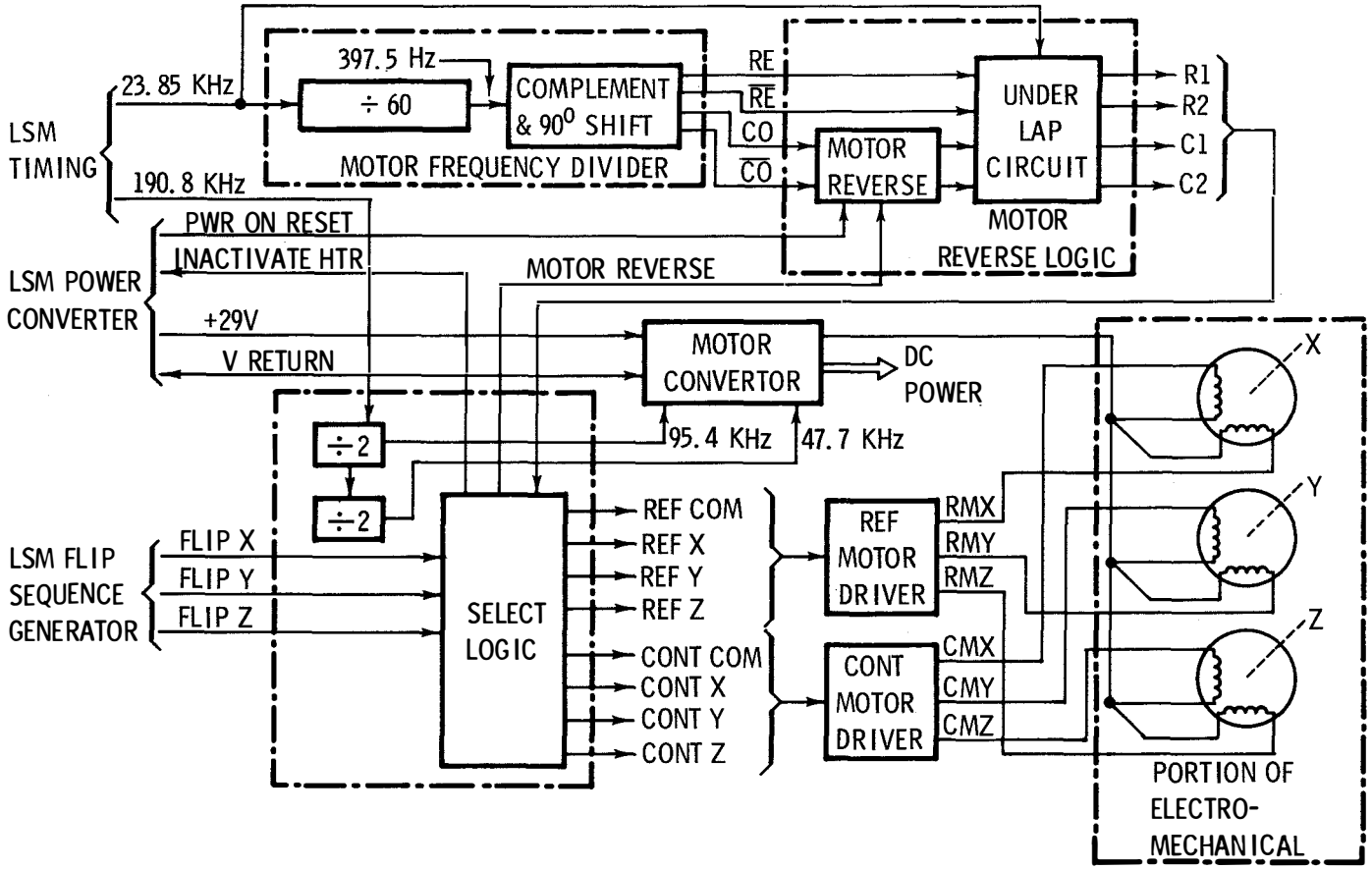

JAN 68 5178.10.26

LSM FLIP POSITION DETECTORS

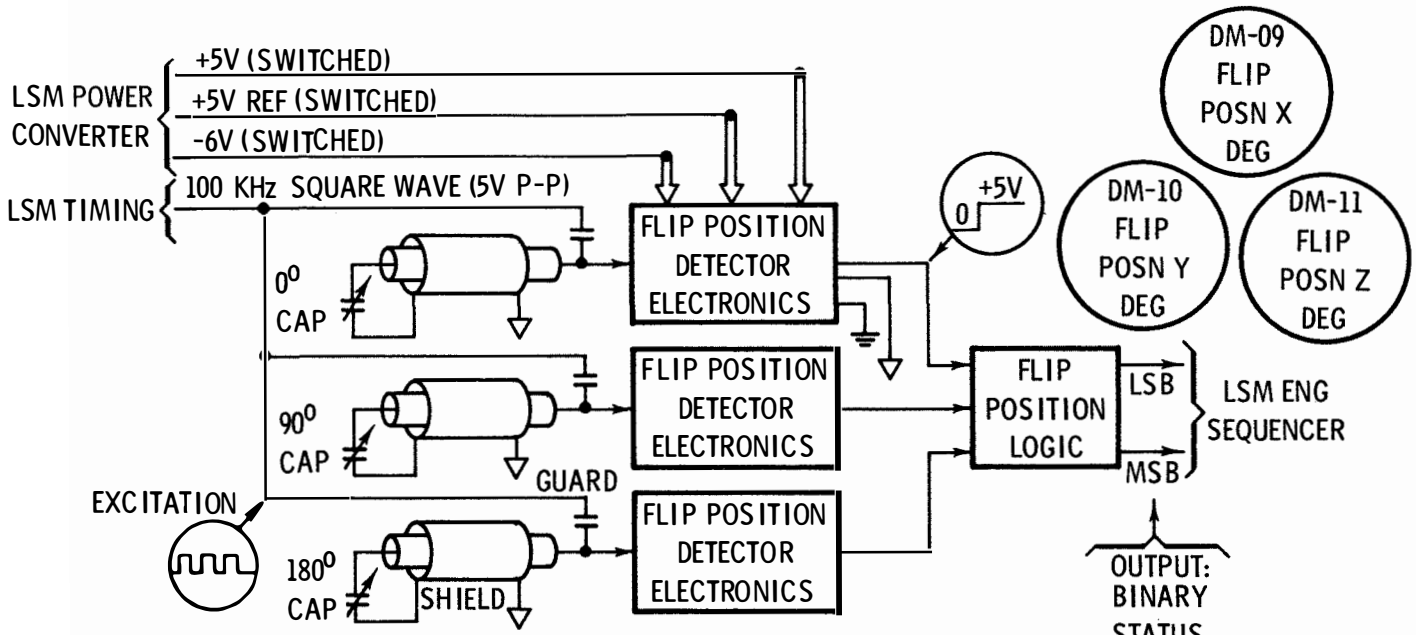

NOTE:
- 3 FLIP POSITION DETECTORS (0^0, 90^0, 180^0) SHOWN FOR ONE LSM SENSOR (EXAMPLE: X, IN TABLE)
- SIMILAR FOR LSM SENSORS Y & Z (TOTAL 9 DETECTORS)

TABLE OF OUTPUTS

POSITION	MSB	LSB
X = 0^0	0	1
X = 90^0	1	0
X = 180^0	1	1
NEITHER	0	0

SEPT 68 5178.10.27

LSM GIMBAL POSITION INDICATORS

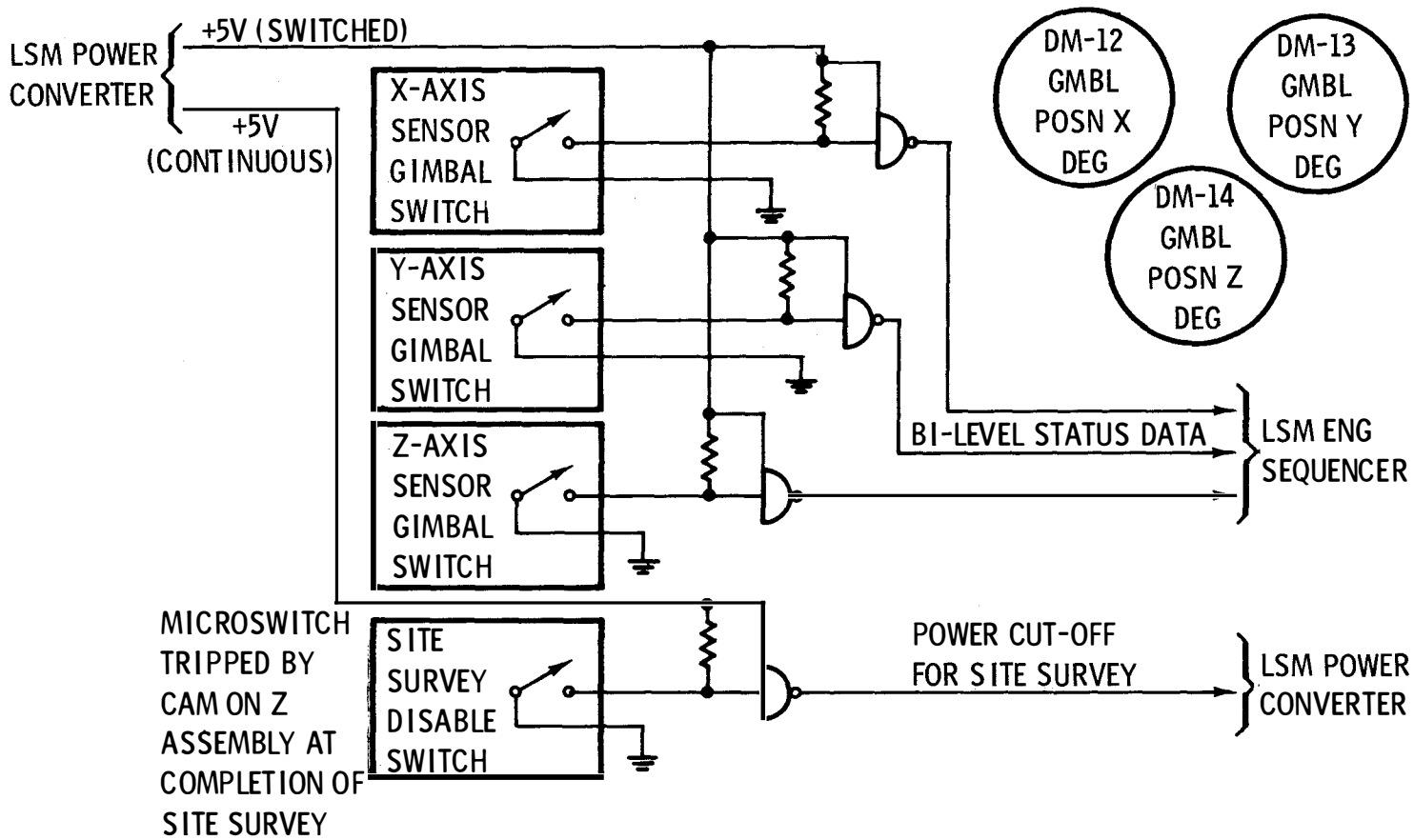

SEPT 68 5178.10.28

LSM LEVEL SENSOR

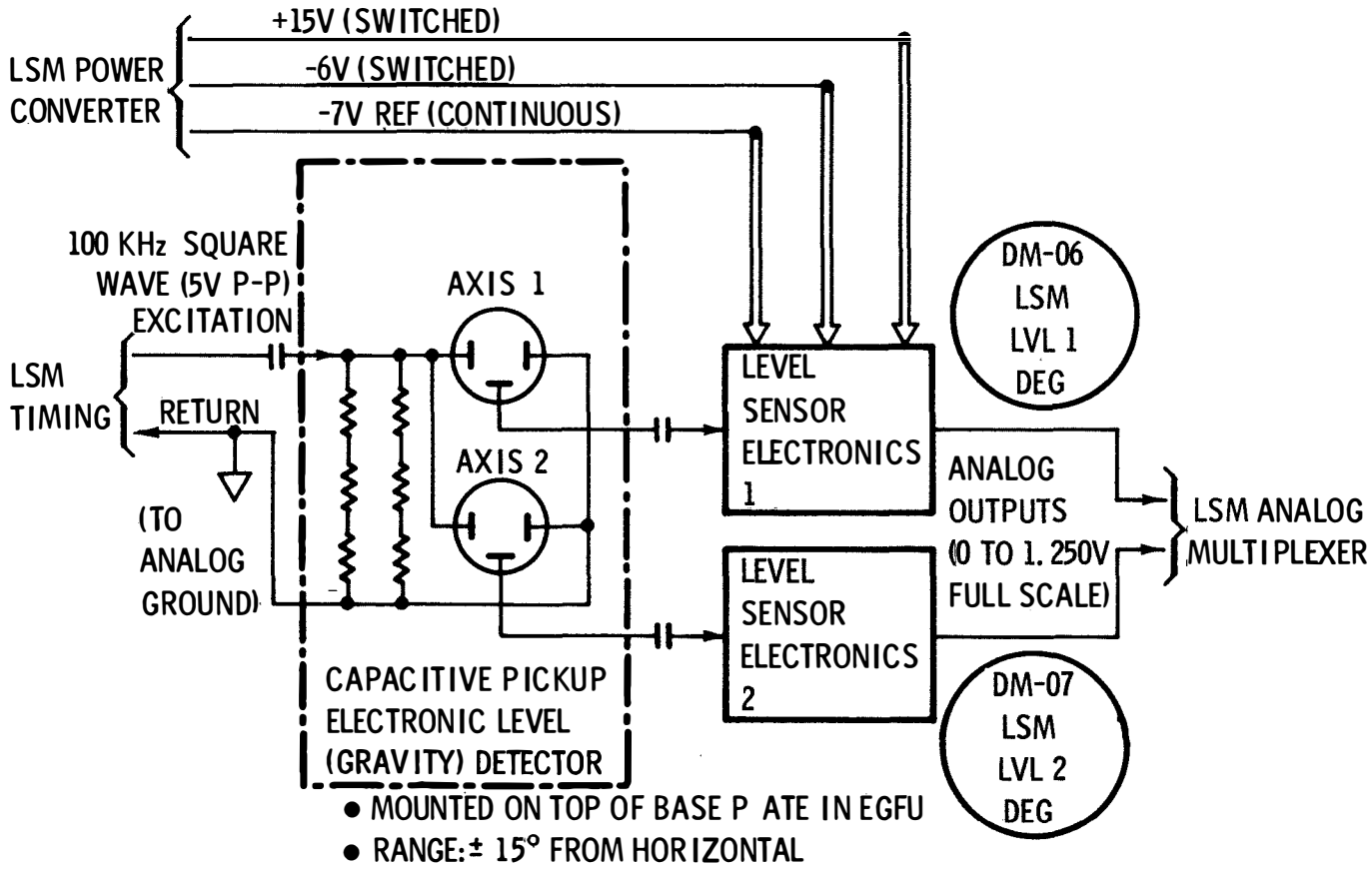

- MOUNTED ON TOP OF BASE P ATE IN EGFU
- RANGE: ± 15° FROM HORIZONTAL

SEPT 68 5178.10.29

LSM ENG SEQUENCER

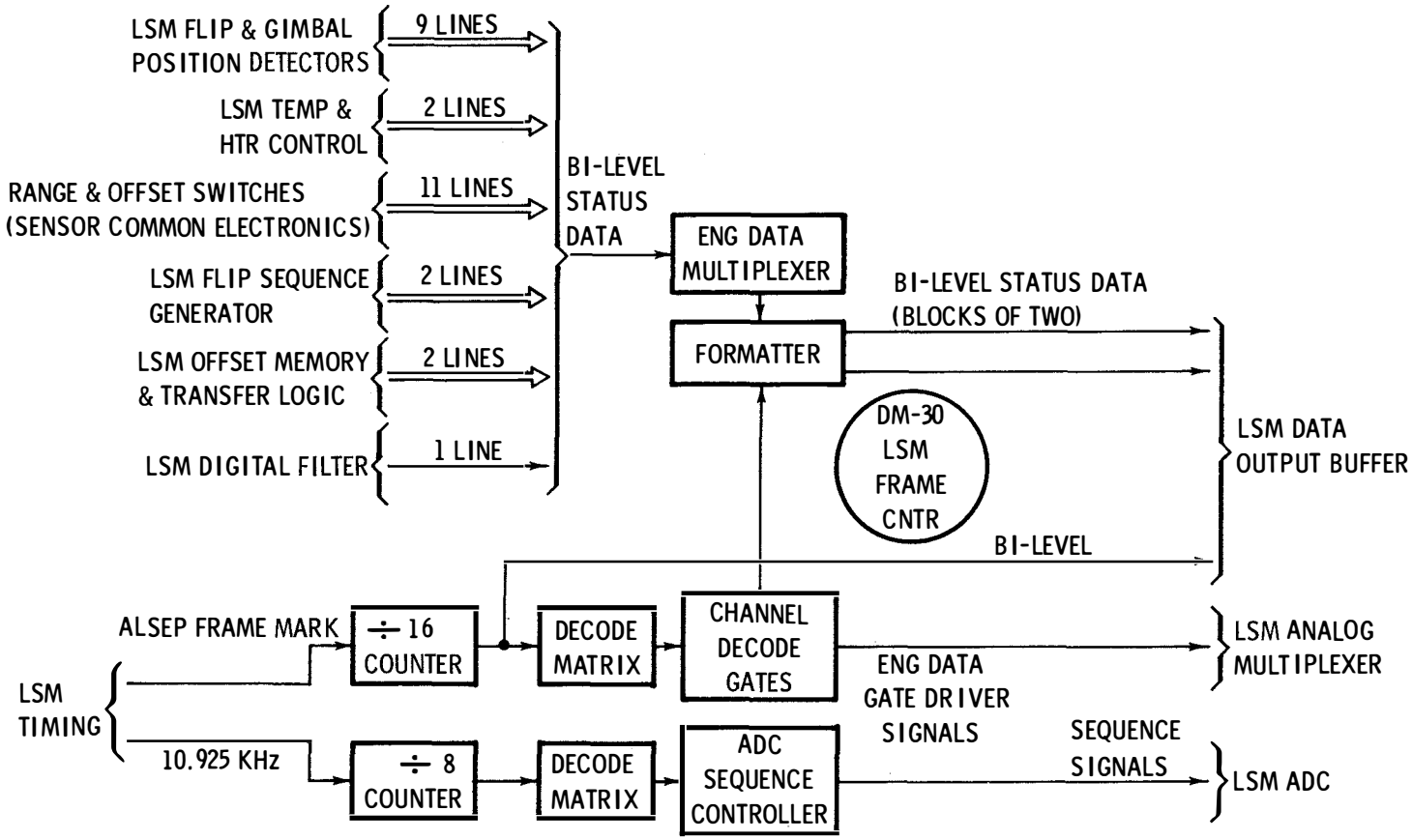

JAN 68 5178.10.30

LSM DATA HANDLING

SCIENTIFIC

- OUTPUTS OF 3 SENSOR ELECTRONICS CHANNELS (PREFILTERED) ARE SAMPLED, BY SAMPLE & HOLD CIRCUIT, WITHIN 125 μSEC OF EACH OTHER AT THE DIGITAL FILTER SAMPLING RATE
- MULTIPLEXED SEQUENTIALLY INTO THE 10-BIT ADC
- CONVERTED INTO 10-BIT BINARY (POLARITY & 9-BIT MAGNITUDE) & STORED IN DIGITAL FILTER MEMORY
- DIGITAL FILTER (COMPUTER):
  - REDUCES (TO ACCEPTABLE LEVEL) ALIASING ERROR INTRODUCED BY SAMPLING RATE
  - USES STATE VARIABLES (FILTERED OUTPUT OF EACH CHANNEL AT A REAL-TIME INSTANT) TO PERFORM FILTER COMPUTATIONS
  - STORED IN CORE MEMORY WHEN NOT IN USE
  - FILTER MAY BE BYPASSED BY GROUND CMD 132 (IN CASE OF FILTER FAILURE)
  - WITHOUT DIGITAL FILTER, ALIASING ERROR IS INCREASED
- 3 CHANNELS (X, Y, & Z) TIME SHARE THE ARITHMETIC UNIT, DATA BUS, & DATA CONTROL UNIT
- STATE VARIABLES ARE SHIFTED TO THE OUTPUT DATA BUFFER

ENGINEERING

- 8 ANALOG ENGINEERING DATA PARAMETERS
- 27 BI-LEVEL STATUS SIGNALS
- ANALOG IS MULTIPLEXED TO USE SAME ADC AS SCIENTIFIC DATA
- 10-BIT OUTPUT (NO POLARITY) TRUNCATED TO 7 BITS (0.5% RESOLUTION)
- BYPASSES DIGITAL FILTER & IS INTEGRATED IN OUTPUT DATA BUFFER (16 10-BIT WORDS):
  - TWO 8-WORD SEQUENCES OF 7-BIT ANALOG OUTPUT
  - 16 2-BIT STATUS SIGNALS (INC 5 FILLER BITS)
  - ONE BIT (LSM FRAME CNTR) TO FLAG START OF 16-WORD SEQUENCE
- INSERTED INTO DATA STREAM AS EVERY 7TH LSM WORD
- CONTENTS OF OUTPUT DATA BUFFER READOUT SEQUENTIALLY TO THE ALSEP DSS UPON RECEIPT OF DATA DEMAND PULSE
- NOTE THAT ALSEP READOUT OF LSM SCIENTIFIC DATA IS STAGGERED (IN TIME) BUT EACH SET OF 3 (X, Y, & Z) SAMPLES IS OBTAINED ≈SIMULTANEOUSLY & SUCCESSIVE SAMPLES ARE AT ≈EQUAL TIME INTERVALS

LSM FILTER BYPASS COMMAND

OCTAL CMD NUMBER

132 LSM FILT IN/OUT

THIS IS A 2-STATE CMD (IN/OUT). LSM ACTIVATION PRESETS THE DIGITAL FILTER IN. TRANSMISSION OF THIS CMD CAUSES A MAJOR PORTION OF THE FILTER TO BE BYPASSED. REPEATED TRANSMISSION OF THIS CMD CAUSES THE FILTER TO BE IN, OUT, IN, ETC.

LSM DATA FORMAT

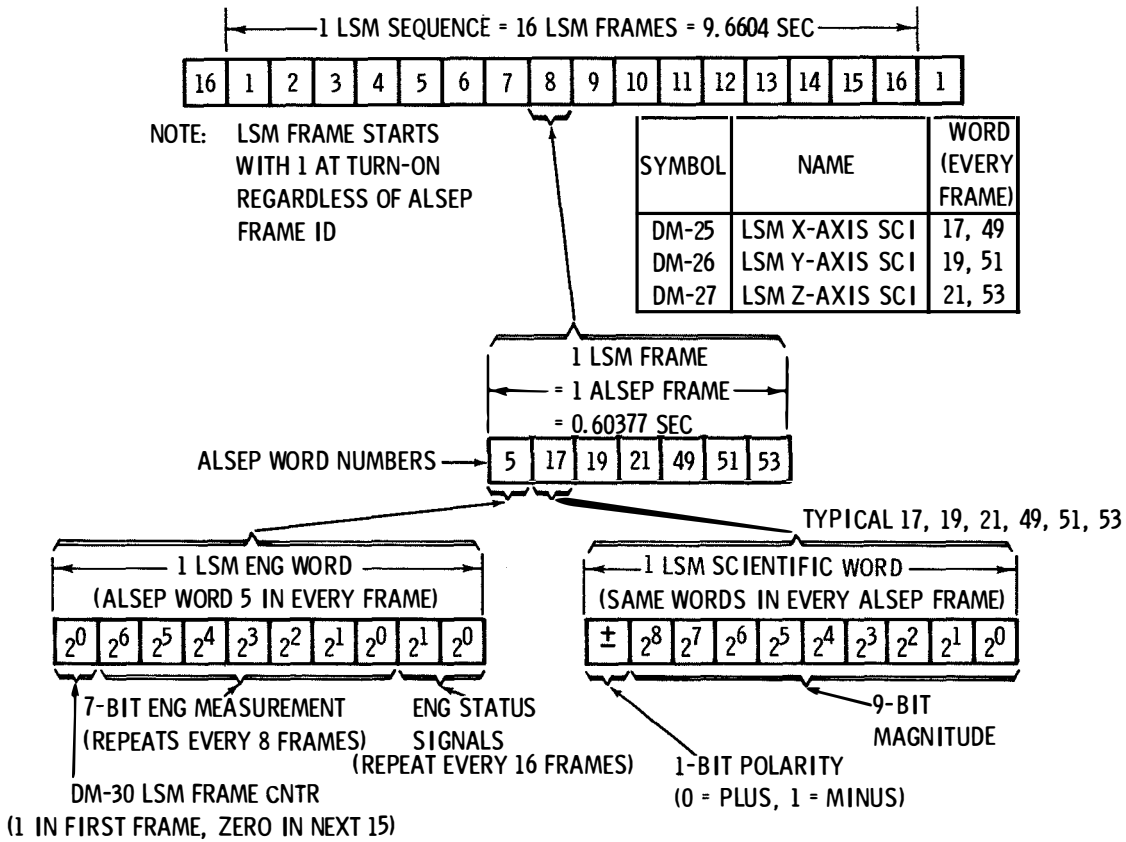

SYMBOL	NAME	WORD (EVERY FRAME)
DM-25	LSM X-AXIS SCI	17, 49
DM-26	LSM Y-AXIS SCI	19, 51
DM-27	LSM Z-AXIS SCI	21, 53

JAN 68 5178.10.33

LSM ENGINEERING DATA

ANALOG MEASUREMENTS

SYMBOL	NAME	LSM FRAME NUMBER	REMARKS
DM-01	LSM SNSR X DEG C	1, 9	• 7-BIT DATA IN ALSEP WORD 5
DM-02	LSM SNSR Y DEG C	2, 10	
DM-03	LSM SNSR Z DEG C	3, 11	
DM-04	LSM BASE DEG C	4, 12	• LSM HAS NO ANALOG DATA INPUT TO ALSEP ADC (WORD 33)
DM-05	LSM INT DEG C	5, 13	
DM-06	LSM LVL 1 DEG	6, 14	
DM-07	LSM LVL 2 DEG	7, 15	
DM-08	LSM 5V SUPPLY	8, 16	

ENGINEERING STATUS SIGNALS

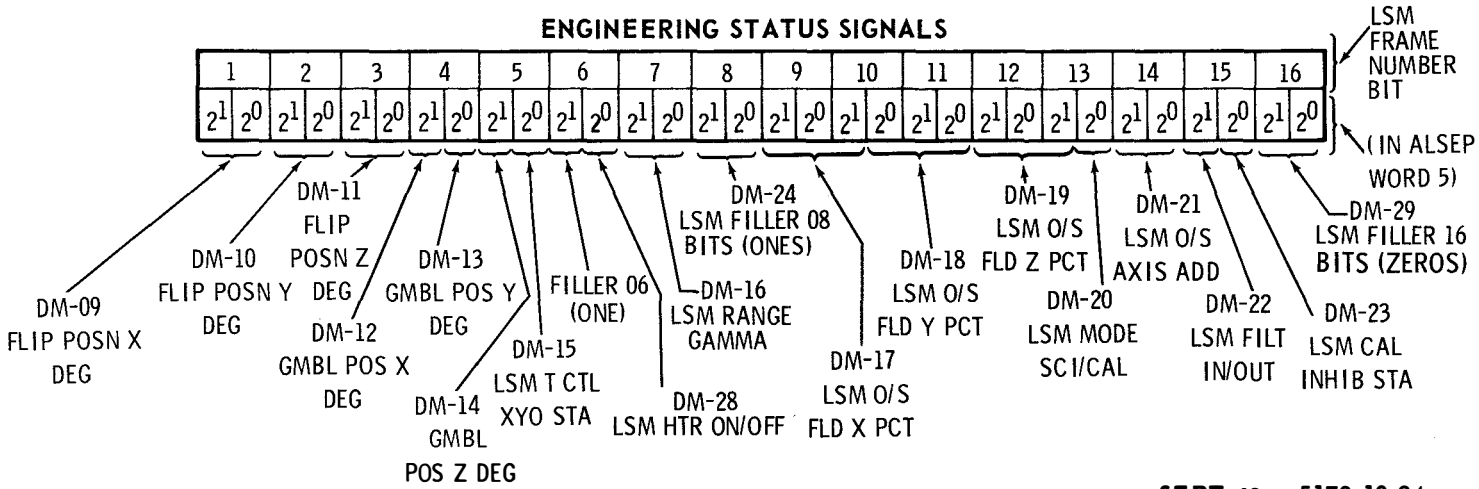

SEPT 68 5178.10.34

LSM DEPLOYMENT

STOWED CONFIGURATION

- FOLDED BOOMS & LEGS SECURED BY 2-PIECE HORSECOLLAR, ATTACHED TO FORWARD MOUNTING BRACKET BY BOYD BOLTS
- AFT END (EGFU) SEATED ON 2 TITANIUM PINS PROJECTING UP FROM PYLON
- EGFU LOCKED BY SLIDE PLATE (LANYARD ACTUATED) ENGAGING LOCKING SURFACES OF PINS

REMOVAL

- USE UHT TO RELEASE FORWARD BOYD BOLTS
- PULL HANDLE ON TOP OF HORSECOLLAR TO DISENGAGE BRACES AND DISCARD UPPER HALF OF HORSECOLLAR AND BRACES
- PULL HANDLE ON TOP OF EGFU TO RELEASE SLIDE PLATE FROM PINS AND LIFT LSM STRAIGHT UP TO REMOVE FROM SUNSHIELD
- GRASP HANDLE LOOPED BETWEEN BOOM HINGES. REMOVE LOWER HALF OF HORSECOLLAR AND LOWER LSM TO SURFACE

FINAL PLACEMENT

- CARRY 50 FT TO EMPLACEMENT SITE
- DEPLOY LUNAR SUPPORT LEGS
- LOWER TO SURFACE (STRIPED LEG EAST)
- UNFOLD BOOMS (DISCARD HANDLE)
- REMOVE PRA COVERS
- ADJUST LEVEL (BUBBLE ON TOP OF EGFU) USING UHT TO ROTATE SCREW IN EACH LEG AT JOINT TO EGFU
- ALIGN E-W USING SHADOWGRAPH (MOUNTED ON TOP OF EGFU)
- MAKE FINAL SHADOWGRAPH READOUT

APR 69 5178.10.35

LSM EMPLACEMENT CRITERIA

PARAMETER	REQUIREMENT	PRIORITY	INDICATOR	COMMENTS
DISTANCE FROM SUBPACKAGE 1	50 ±5 FT	2	55 FT CABLE	IN QUADRANT OPPOSITE RTG TO MINIMIZE MAGNETIC EFFECTS
DIRECTION FROM SUBPACKAGE 1	OPPOSITE LM ±20°	2	EYEBALL	MINIMIZE MAGNETIC CONTAMINATION
SITE SELECTION	AVOID RUBBLE	3	EYEBALL	FOR MAXIMUM STABILITY
LEVEL, WRT INDICATOR	± 5° OF HORIZ (ACCEPTABLE) ± 3° OF HORIZ (GOAL)	1	BUBBLE LEVEL ON EGFU	TM OF INTERNAL LEVEL SENSOR
ALIGN, WRT SHADOW	± 3° OF E-W	1	SHADOW-GRAPH	COLOR-CODED LEG POINTS E*
READOUT OF ALIGNMENT, WRT SHADOW	± 1° OF E-W	1	SHADOW-GRAPH	NEEDED FOR SCIENTIFIC DATA INTERPRETATION; THERMAL LESS CRITICAL**
EXPERIMENT INTERRELATION	MUST BE AT LEAST 80 FT FROM SIDE AND PREFERABLY 100 FT			
SPECIAL REQUIREMENTS	*COULD BE ROTATED 180° AND MEET THERMAL CRITERIA; HOWEVER, SHADOWGRAPH IS NOT REVERSIBLE **RADIATORS ON ELECTRONICS REQUIRE E-W ALIGNMENT±3°.			

APR 69 5178.10.36

LSM LEVELING AND ALIGNMENT

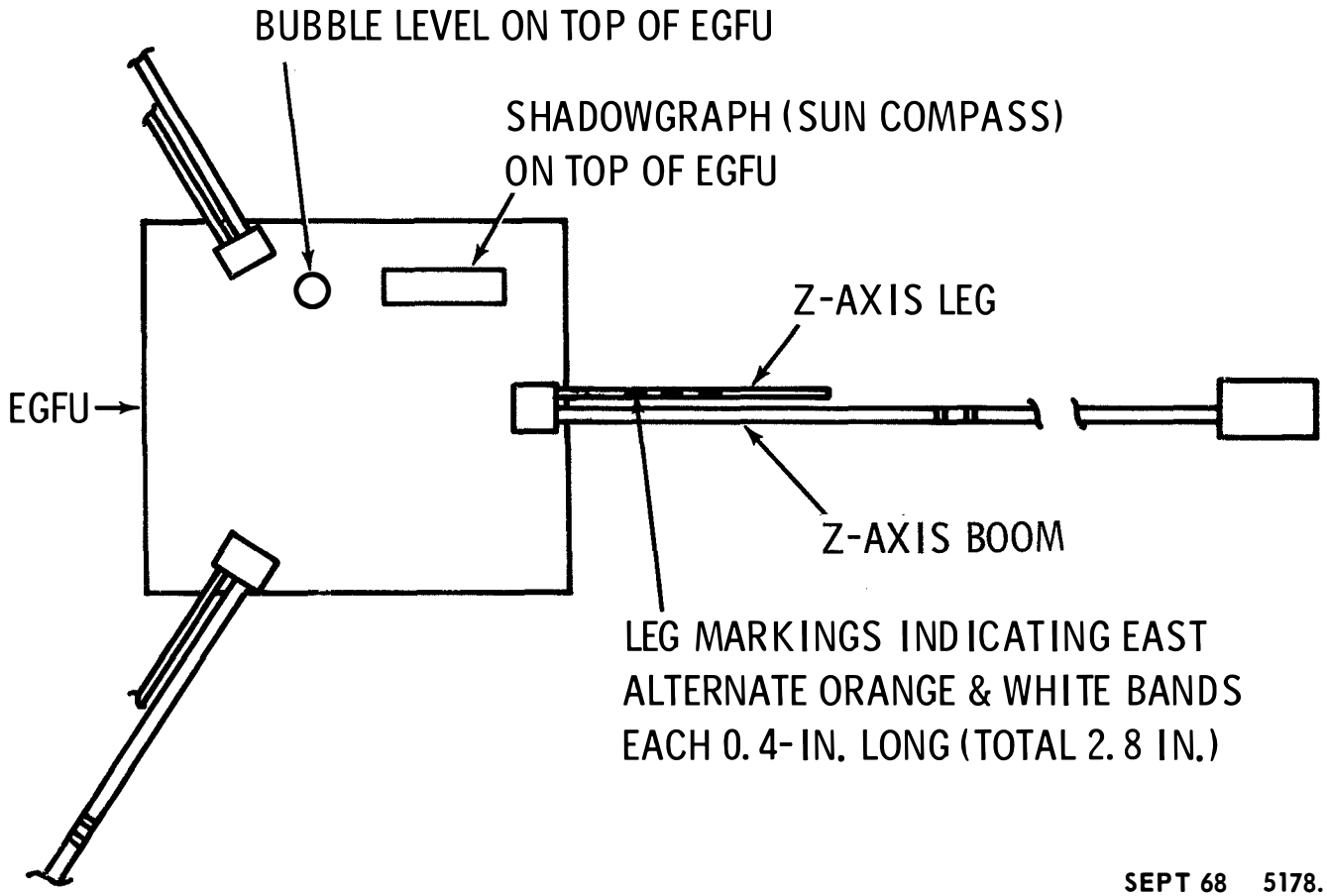

SEPT 68 5178.10.37

SOLAR WIND SPECTROMETER

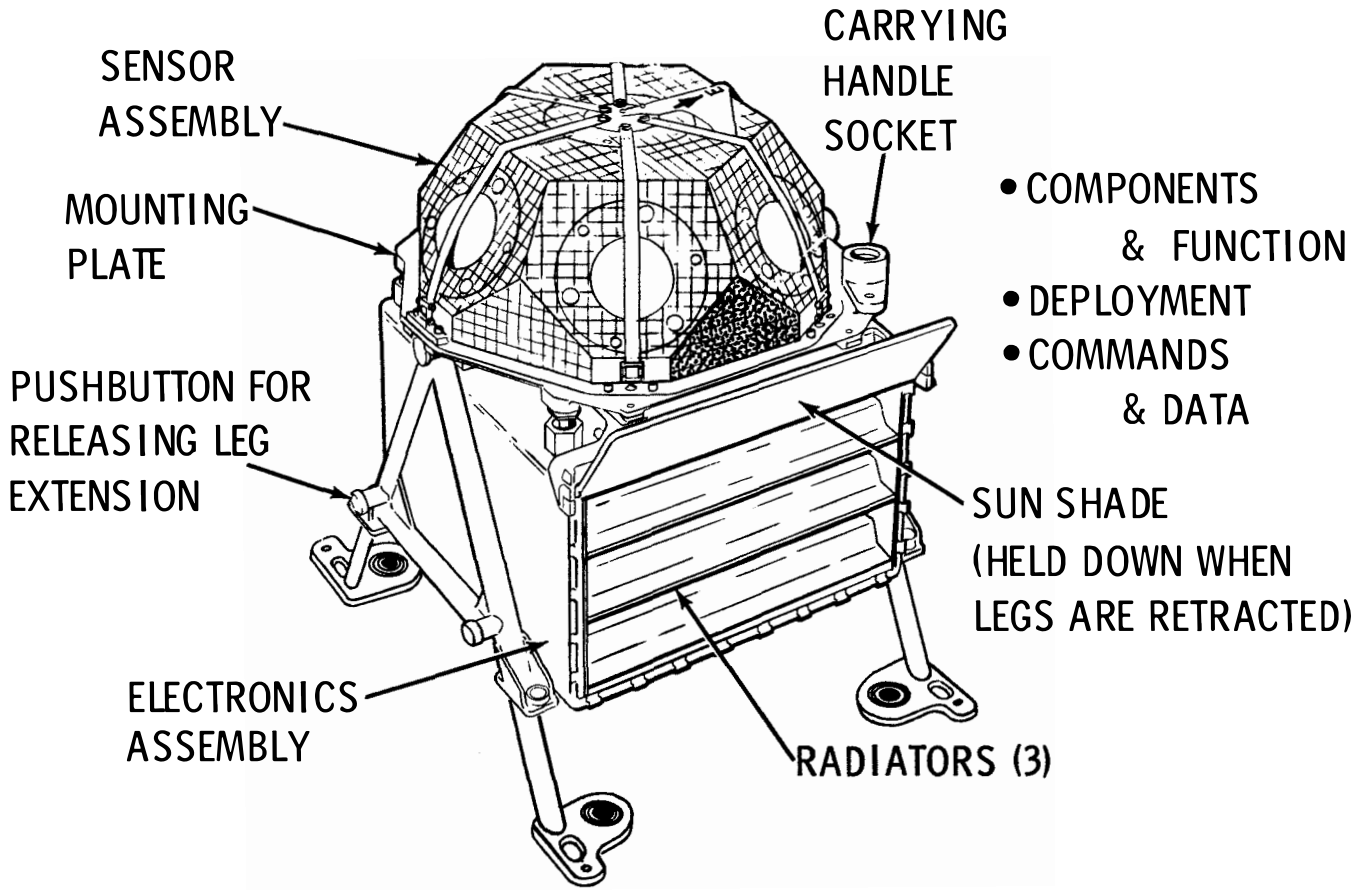

APR 69 5178.11.1

SWS SIZE AND WEIGHT

EARTH WT, LB = 12.25

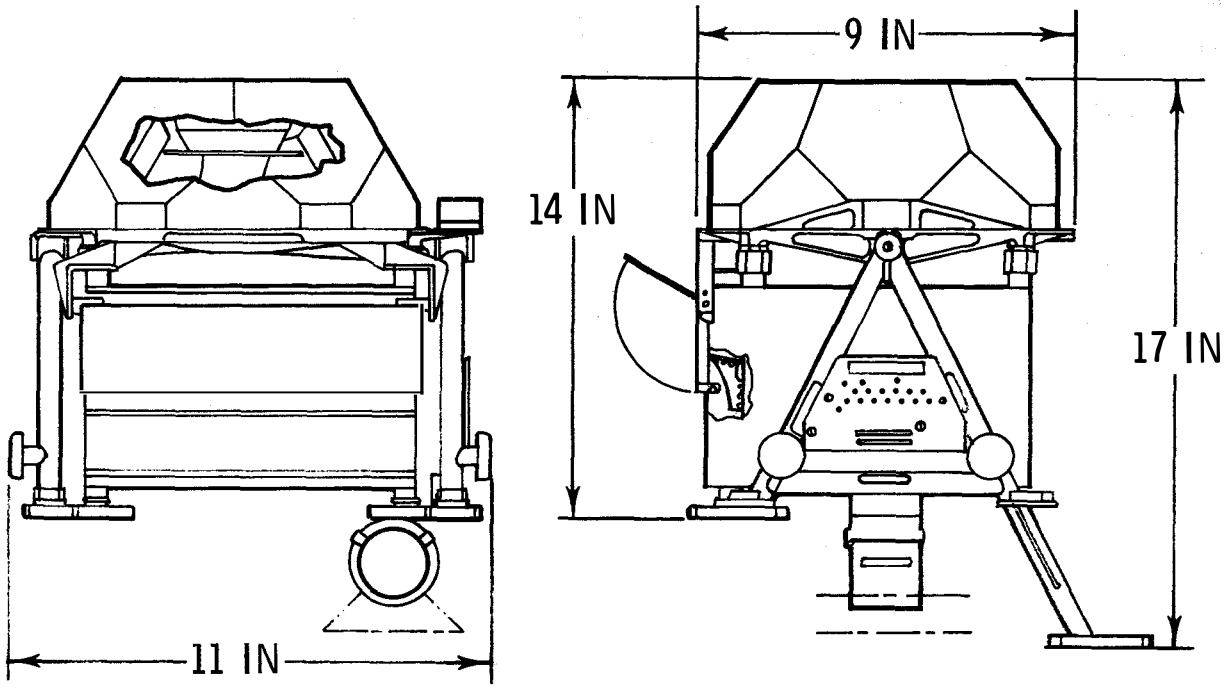

OCT 68 5178.11.2

SWS MEASUREMENT CAPABILITY

ENERGY RANGE:

ELECTRONS - 6 to 1330 ELECTRON VOLTS
POSITIVE IONS - 18 to 9780 ELECTRON VOLTS } TWO RANGES

FLUX DENSITY RANGE:

10^6 to 10^{10} PARTICLES PER CM^2 PER SEC

ENERGY RESOLUTION:

ELECTRONS - FACTOR OF 2
POSITIVE IONS - FACTOR OF $\sqrt{2}$

FLUX RESOLUTION:

3.7 % OF TRUE FLUX VALUE

DIRECTION:

INCIDENCE ANGLES $\pm 15^\circ$ FOR COLLIMATED FLUX

OCT 68 5178.11.3

MODULATING FARADAY CUP

- MODULATOR CIRCUIT APPLIES 2 KHz SQUARE WAVE TO SENSOR
- 2 KHz SUPERIMPOSED ON DC (PEAK-TO-PEAK)
  - 1/6 OF DC LEVEL FOR POSITIVE DC
  - 1/3 OF DC LEVEL FOR NEGATIVE DC
- DC LEVEL STEPS (STAIRCASE FASHION) THROUGH CONTINUOUS, SUCCESSIVE VALUES
  - 14 TIMES WITH $X\sqrt{2}$ SPACING FOR POSITIVE DC
  - 7 TIMES WITH X 2 SPACING FOR NEGATIVE DC

ADVANTAGE

STRAY PARTICLE FLUXES, SUCH AS PHOTOELECTRONS PRODUCED INSIDE THE SENSOR, ARE NOT CHANGED BY THE MODULATION POTENTIAL; THEREFORE, THEY ARE NOT INCLUDED WITHIN THE MEASUREMENTS.

SWS DUST COVERS

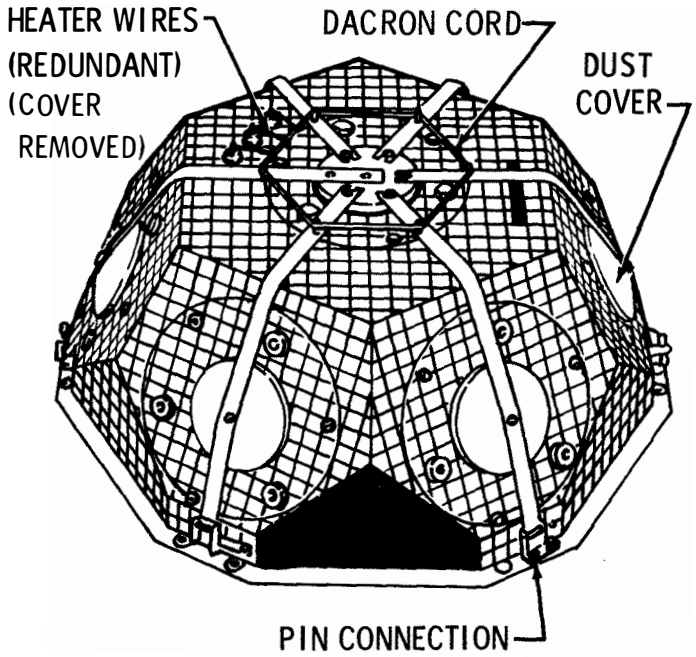

- HEATER WIRES BURN RETAINING CORD TO RELEASE COVERS
- INITIATED BY GROUND COMMAND
- REQUIRED BURN TIME, 1.5 SEC
- POWER APPLIED 4 ± 2 SEC

APR 69 5178.11.5

SWS FUNCTIONAL DIAGRAM

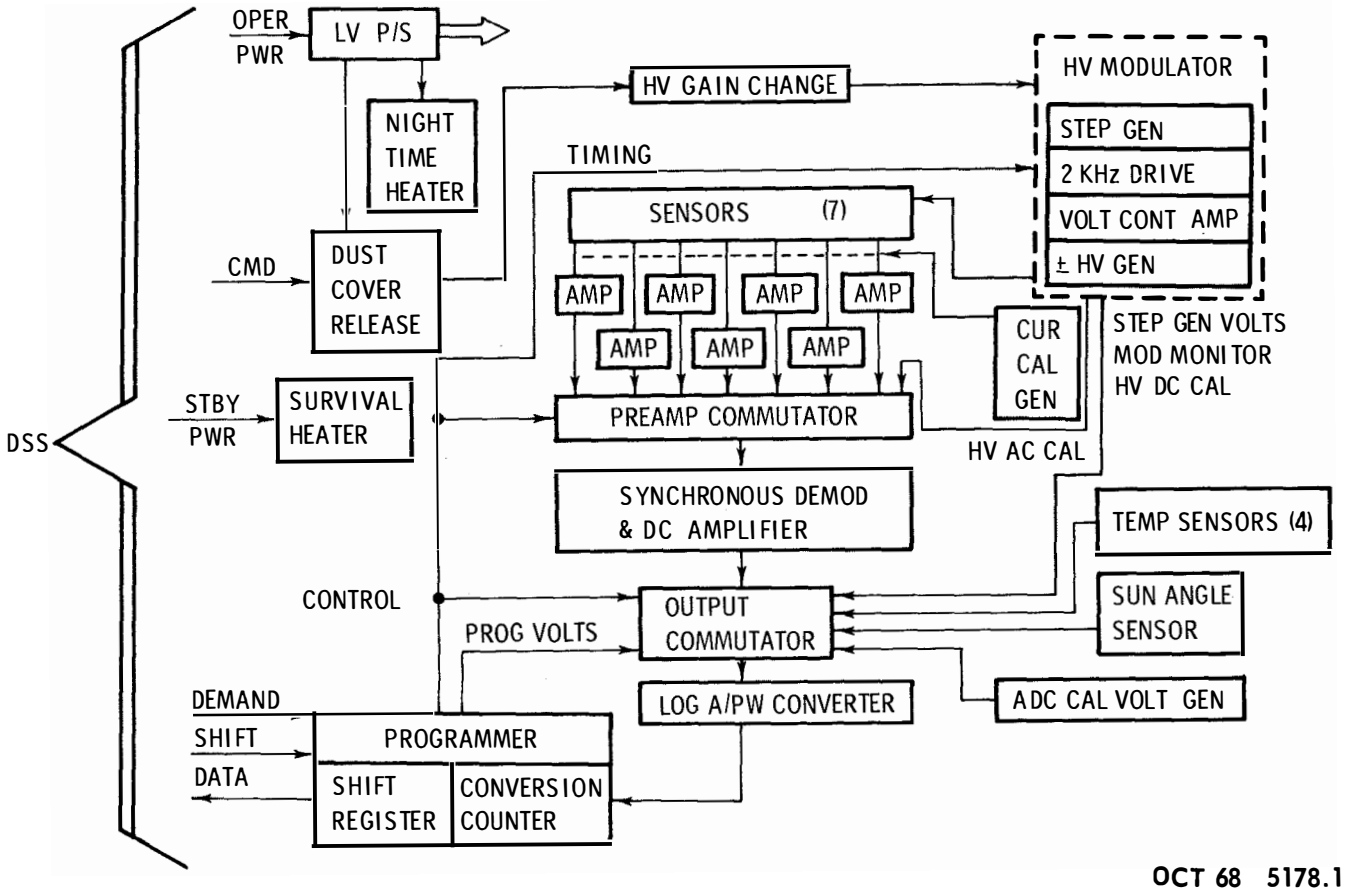

OCT 68 5178.11.6

SWS ELECTRONIC MODULES

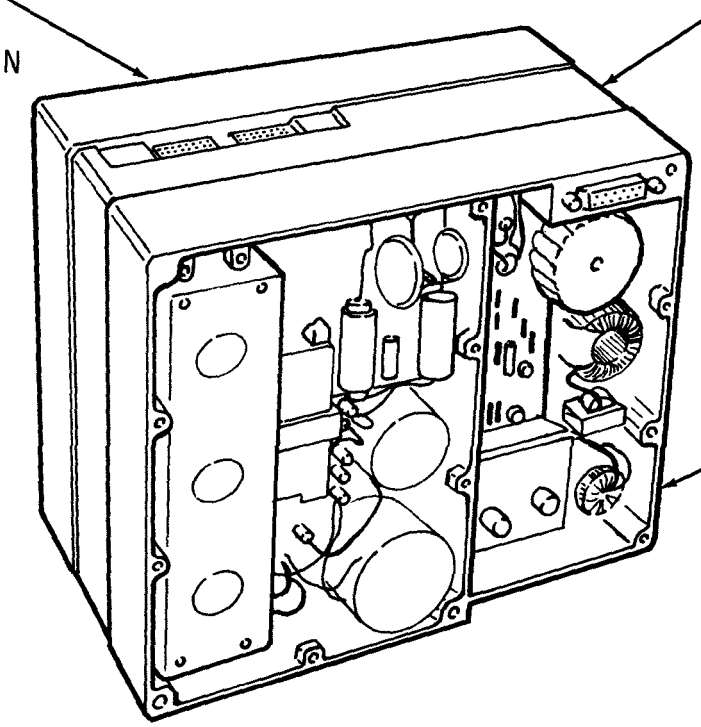

DEC 67 5178.11.7

SWS VERIFICATION FEATURES

CALIBRATION TYPE	NUMBER OF WORDS	DISTRIBUTION	REPETITION RATE *
2 KHz CURRENT PULSES ± 2% TO PREAMPS	32	4 VALUES (INC 0) INTO EACH CHAIN & 7 COMBINED	112.3 SEC
CAL VOLTAGES ± 2% TO OUTPUT COMMUTATOR	8	5 VALUES PLUS 3 REPEATS	56.1 SEC
READOUT OF AC & DC HIGH VOLTAGES	42	14 EACH FOR + DC 7 EACH FOR - DC	449.2 SEC

* AT NORMAL ALSEP DATA RATE, COMPLETE SWS CYCLE (449.2 SEC) CONSISTS OF 16 SEQUENCES (28.065 SEC)

NOV 67 5178.11.8

SWS THERMAL CONTROL

MECHANICAL

GOLD - PLATED FIBERGLAS HOUSING
COVERED WITH SILK/MYLAR (ALUMINIZED)
& COATED WITH WHITE PAINT

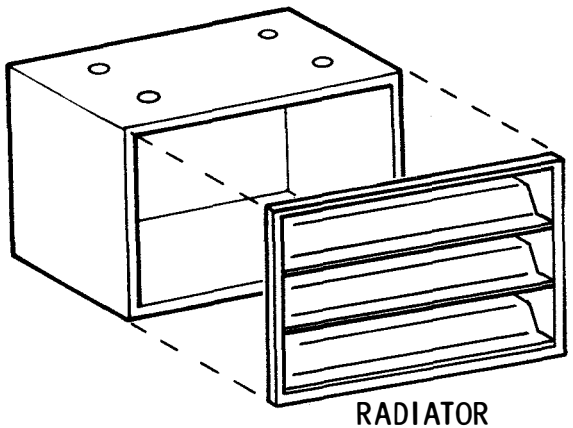

RADIATOR
(ONE SIDE ONLY)

ELECTRICAL

UNIT	LOCATION	REMARKS
THERMISTOR (1) SENSOR	SENSOR ASSY	WINSCO MODEL 2712-4-00-2
THERMISTORS (3) SENSOR	MOD 100, 200, 300	YELLOW SPRINGS YSI 44063
THERMISTOR (1) CONTROL	MOD 300 ACTIVATES < 25°C	YELLOW SPRINGS YSI 44063
OPERATIONAL HEATERS (SERIES)	MOD 200	43-OHM DISSIPATES 1.2 W
	MOD 300	75 - OHM DISSIPATES 2.1 W
SURVIVAL (STBY) HEATERS (3 IN PARALLEL)	ONE IN EACH MODULE	680 - OHM (2) 600 - OHM (1) 4.0 W TOTAL (MAX)

NOTES:
- NO MANUAL (COMMAND) THERMAL CONTROL
- NO THERMOSTAT FOR SURVIVAL HEATER
- OPERATIONAL HEATER LIMITED TO AVOID > 6.5 W TOTAL POWER

OCT 68 5178.11.9

SWS TIMING FUNCTIONS

INTERNAL	EXTERNAL
BASIC 1024 KHz CLOCK SUPPLIES 256, 2.0, & 0.5 KHz TO VARIOUS USERS	SHIFT PULSES & DEMAND PULSE FROM DATA SUBSYSTEM ARE USED TO SHIFT DATA FROM REGISTER
• CONVERSION COUNTER OPERATES AT 256 KHz • DC/DC CONVERTER OPERATES AT 2.67 KHz (FREE RUNNING) • HV MODULATOR OPERATES AT 2.0 KHz	THESE PULSES ARE ALSO USED TO PROGRAM COMMUTATORS & STEP GENERATOR

ONE SEQUENCE OF SWS OPERATION CONSISTS OF 14 POSITIVE STEPS (EACH TIME SAMPLING TOTAL + 7 INDIVIDUAL SENSORS), 16 CAL WORDS, 7 NEGATIVE STEPS (8 WORDS EACH) & 2 SEQUENCE/CYCLE COUNTER WORDS (TOTAL 186) IN 28.065 SEC.

SWS POWER PROFILE

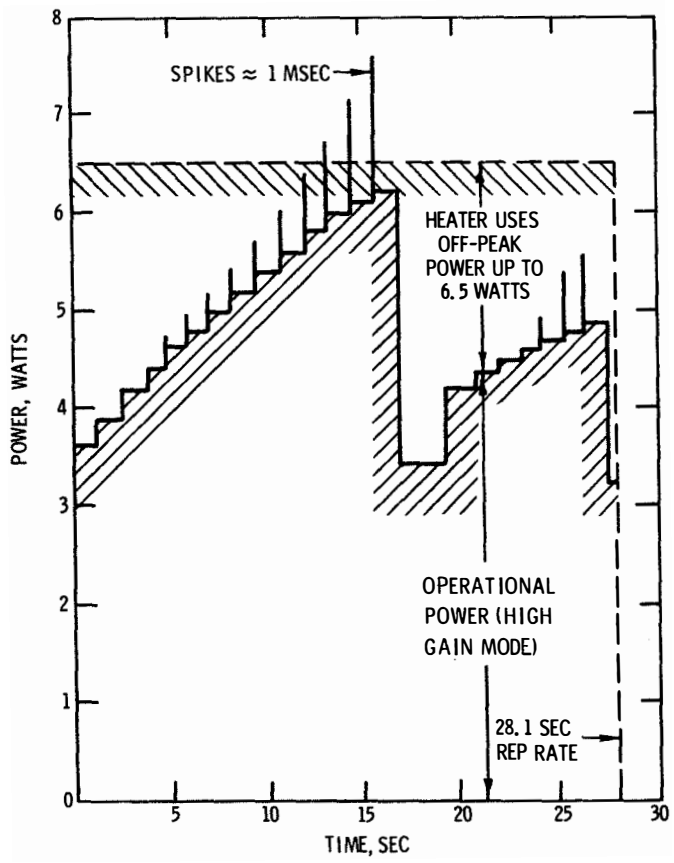

- STBY POWER: 4.0 WATTS (MAX)
- OPER POWER SHOWN EXCEPT FOR DUST COVER REMOVAL (10 WATTS FOR 4±2 SEC)
- TURN-ON TRANSIENT ≈ 10.5 WATTS FOR LESS THAN 60 MSEC

OCT 68 5178.11.11

SWS TIE-DOWN AND RELEASE

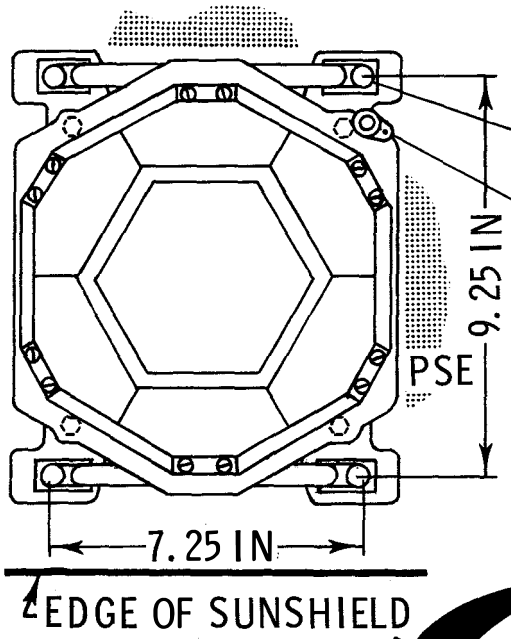

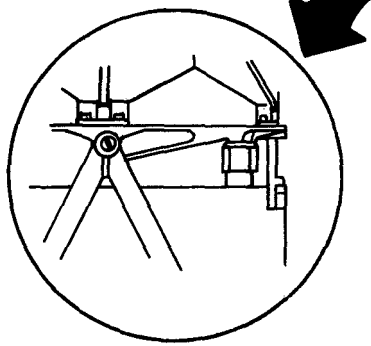

FOUR FASTENERS RELEASED BY UHT
INSERT UHT IN SOCKET AND LIFT
LEG ASSEMBLIES ATTACHED TO MOUNTING
PLATE IN TIE-DOWN POSITION COMPRESSES
HEXAGONAL SEPARATORS IN EACH CORNER:
(1) RESTRAINING PIVOTING MOTION
(2) LOCKING SUNSHADE IN STOWED POSITION
RELEASE OF TIE-DOWN
FASTENERS & LEGS ALLOWS
1/4 IN. VERTICAL SEPARATION
CABLE REEL IS STOWED UNDER SWS

OCT 68 5178.11.12

SWS EMPLACEMENT CRITERIA

PARAMETER	REQUIREMENT	PRIORITY	INDICATOR	COMMENTS
DISTANCE FROM SUBPACKAGE 1	13 ± 1 ft (15 FT CABLE)	1	PACED OFF	SEE EXPERIMENT INTERRELATION
DIRECTION FROM SUBPACKAGE 1	± 30° FROM DUE N OR S*	2	EYEBALL	± 10° AREA OF REDUCED SENSITIVITY (OTHERS AT 60°)
SITE SELECTION	APPROX HORIZ	3	EYEBALL	AVOID THERMAL DISTURBANCES
LEVEL	± 5 OF HORIZ	2	EYEBALL & GRAVITY	PENDULUM EFFECT ON ONE LATERAL AXIS. INTERNAL SUN SENSOR.
ALIGN, WRT SHADOW	± 5° OF E-W	2	PAINT** AND UHT SHADOW	LOUVERED SIDE AWAY FROM RTG (THERMAL AND SCIENCE REQUIREMENT)
EXPERIMENT INTERRELATION	*NO OTHER SUBSYSTEM SHOULD SUBTEND AN ANGLE GREATER THAN 0.03 STERADIAN AT THE SOLAR WIND LOCATION AND SHOULD BE IN AN AREA OF REDUCED SENSITIVITY.			
SPECIAL REQUIREMENTS	**ARROW NOMINALLY POINTS EAST ALTHOUGH SCIENTIFIC OUTPUT DEPENDS ONLY ON KNOWING FINAL ALIGNMENT (COULD BE EAST OR WEST). FINAL ALIGNMENT BY SETTING ORANGE FACES (N-S) ON SENSOR ASSEMBLY EQUALLY IN SHADE, AND UHT SHADOW PARALLEL TO SENSOR EDGE.			

APR 69 5178.11.13

SWS ALIGNMENT MARKING

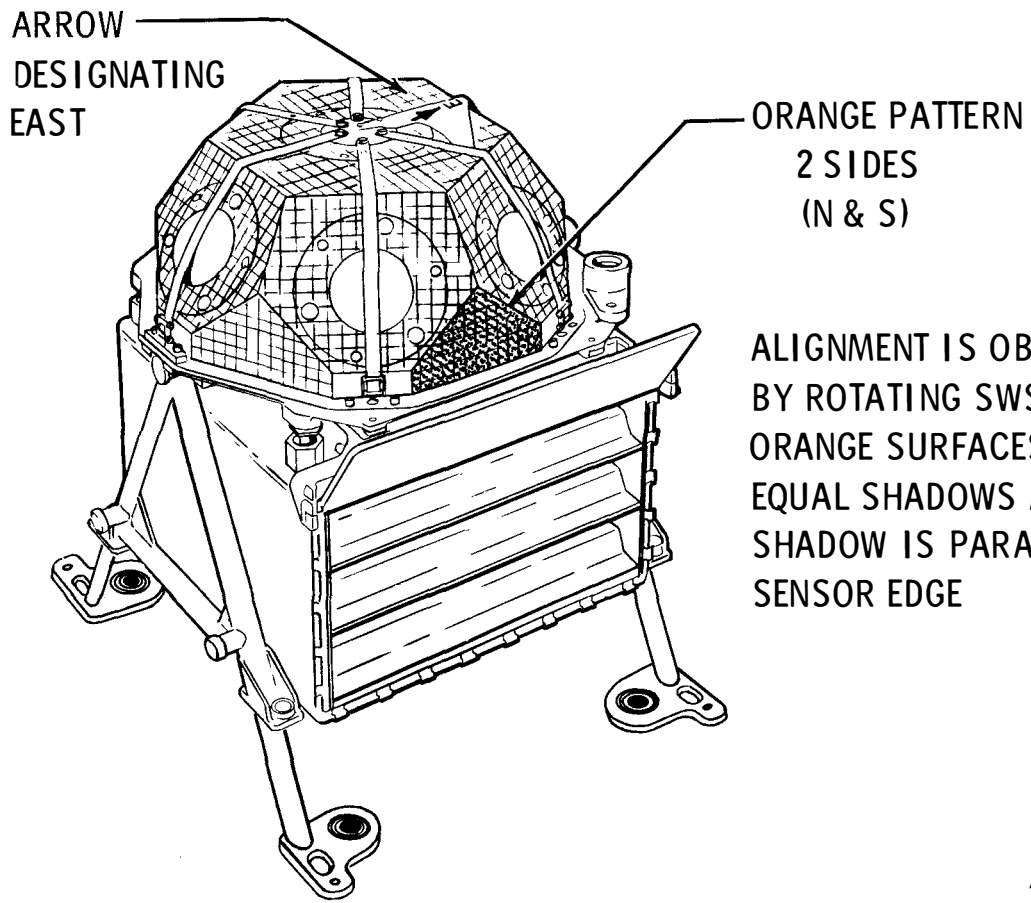

ALIGNMENT IS OBTAINED BY ROTATING SWS UNTIL ORANGE SURFACES HAVE EQUAL SHADOWS AND UHT SHADOW IS PARALLEL TO SENSOR EDGE

APR 69 5178.11.14

SWS ALIGNMENT MECHANISM

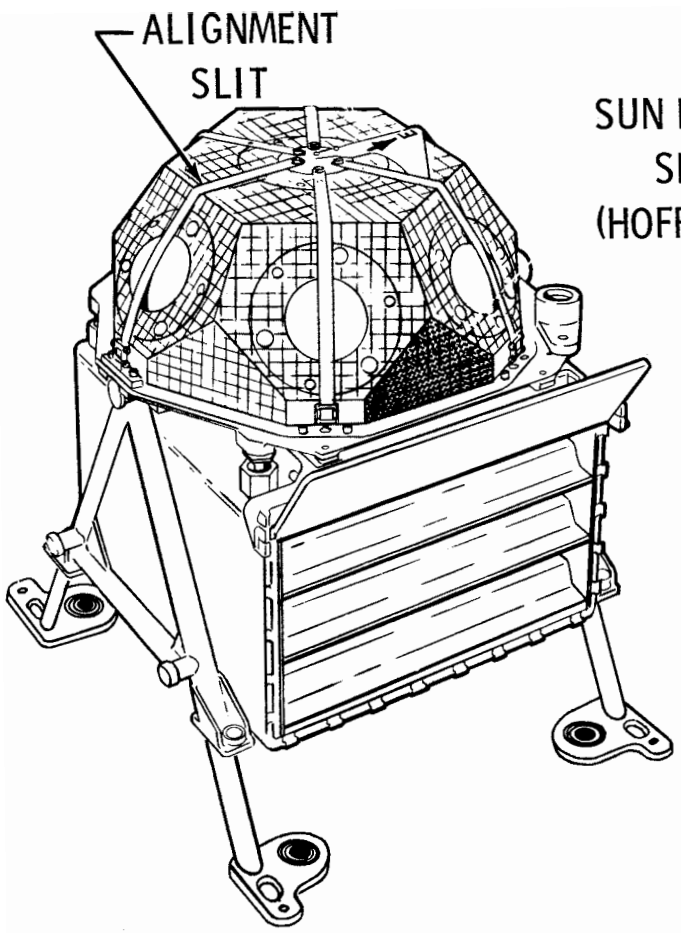

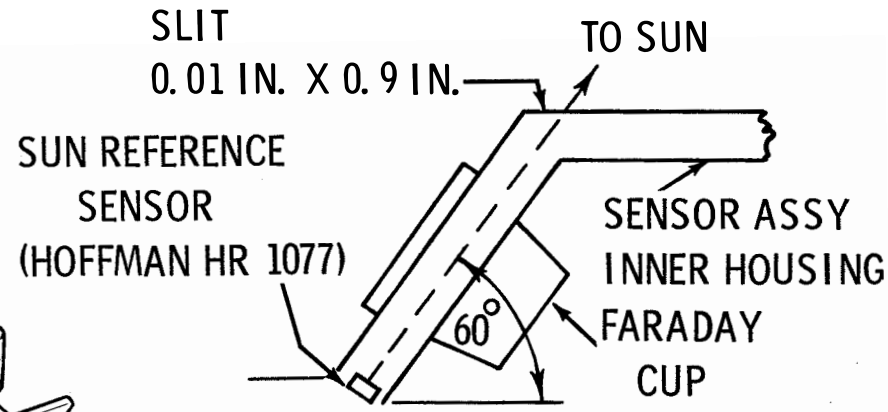

- SUN REFERENCE SENSOR GIVES A SHARP VOLTAGE PEAK FOR ≈ 1 HR WHEN SUN PASSES 30° OFF VERTICAL (VERIFY SWS ALIGNMENT)
- OUTPUT WHEN SUN IS OFF-AXIS IS REDUCED BUT SUFFICIENT TO VERIFY DUST COVER RELEASE

APR 69 5178.11.15

SWS COMMANDS

OCTAL CMD NUMBER

122 SWS CVR GO

CMD 122 CAUSES THE ONE TIME FUNCTION OF REMOVING THE SWS DUST COVERS. THIS CMD IS AN IRREVERSIBLE FUNCTION AND IS NECESSARY TO OBTAIN SWS SCIENTIFIC DATA.

122-122-122 HV GAIN CHANGE

TRANSMISSION OF CMD 122 THREE TIMES WITHIN 10 SEC SWITCHES THE VOLTAGE CONTROL AMPLIFIER FROM THE INITIAL (TURN-ON) LOW GAIN MODE TO THE HIGH GAIN MODE. BOTH GAIN SETTINGS WILL BE USED FOR SCIENTIFIC DATA COLLECTION. LOW GAIN MINIMIZES POSSIBILITY OF ARCING.

SWS DATA FORMAT

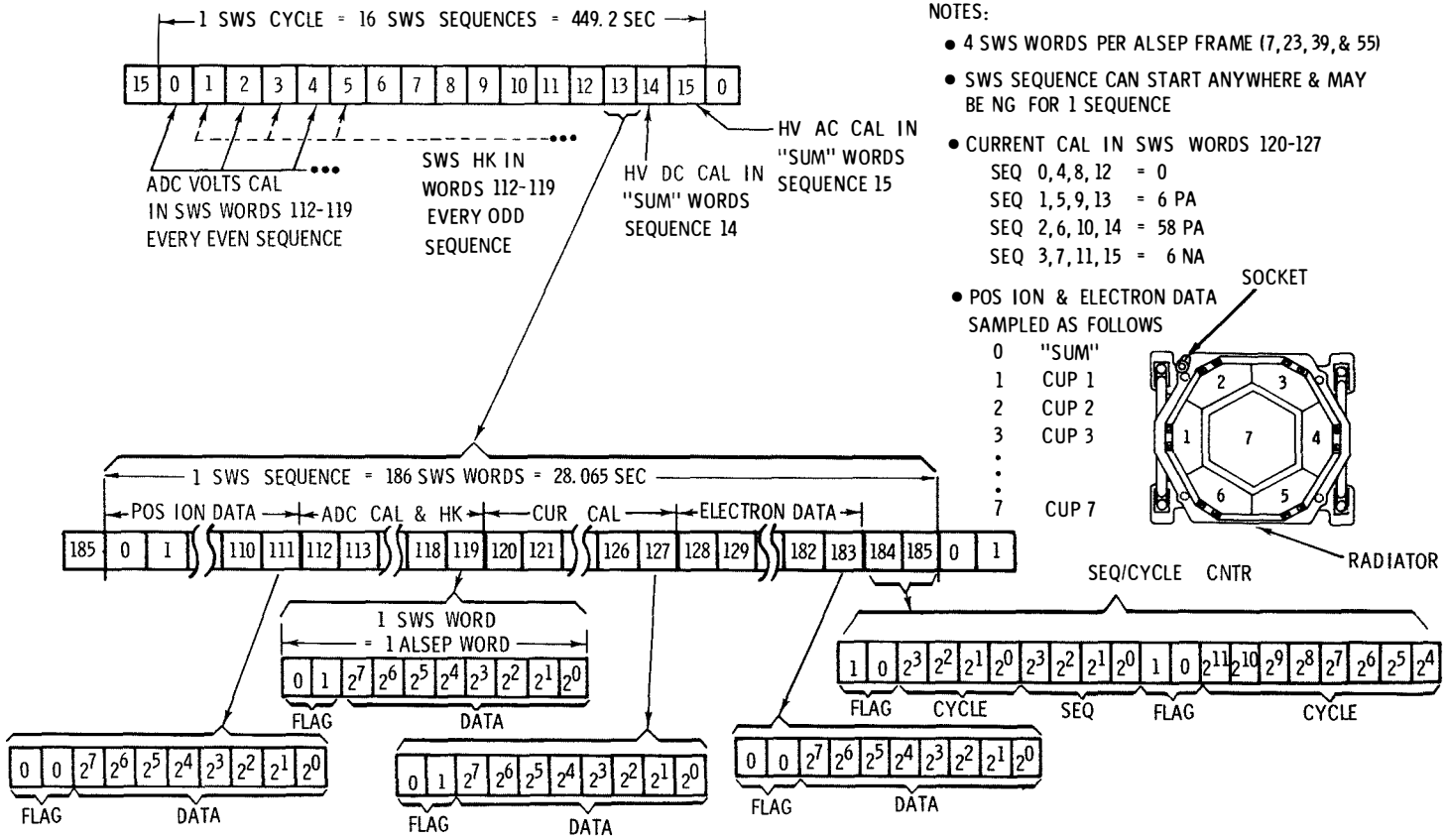

NOTES:

- 4 SWS WORDS PER ALSEP FRAME (7, 23, 39, & 55)
- SWS SEQUENCE CAN START ANYWHERE & MAY BE NG FOR 1 SEQUENCE
- CURRENT CAL IN SWS WORDS 120-127
  - SEQ 0, 4, 8, 12 = 0
  - SEQ 1, 5, 9, 13 = 6 PA
  - SEQ 2, 6, 10, 14 = 58 PA
  - SEQ 3, 7, 11, 15 = 6 NA
- POS ION & ELECTRON DATA SAMPLED AS FOLLOWS
  - 0 "SUM"
  - 1 CUP 1
  - 2 CUP 2
  - 3 CUP 3
  - ⋮
  - 7 CUP 7

OCT 68 5178.11.17

SUPRATHERMAL ION DETECTOR EXPERIMENT (SIDE)

- COMPONENTS & FUNCTIONS
- DEPLOYMENT
- COMMANDS & DATA

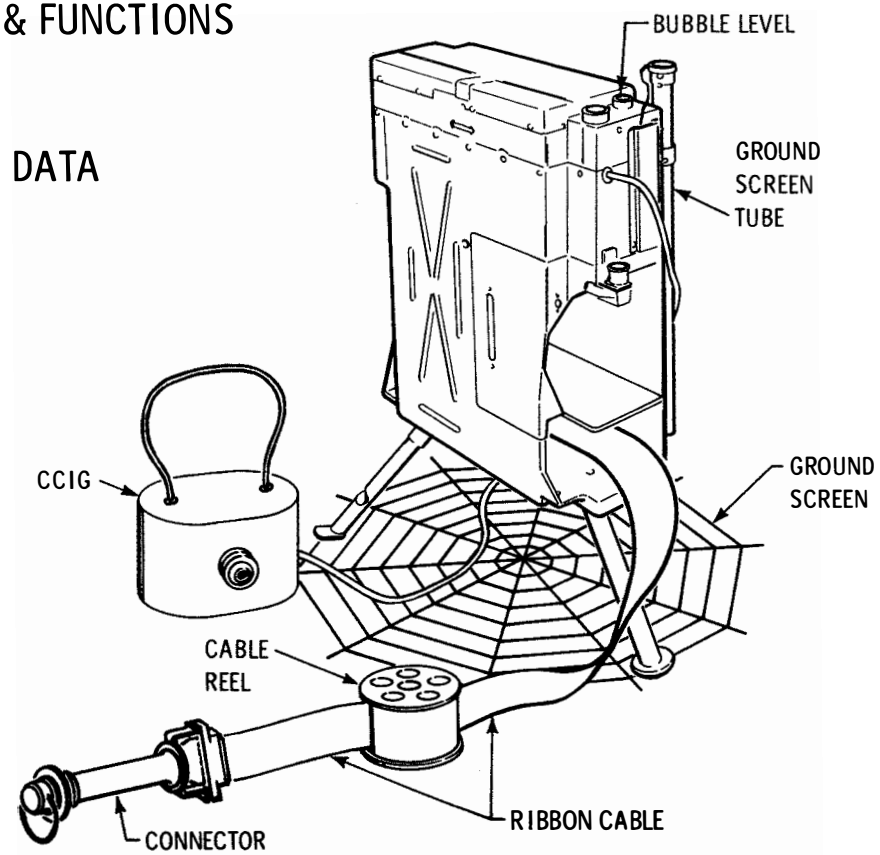

APR 69 5178.12.1

ION DETECTOR INSTRUMENT

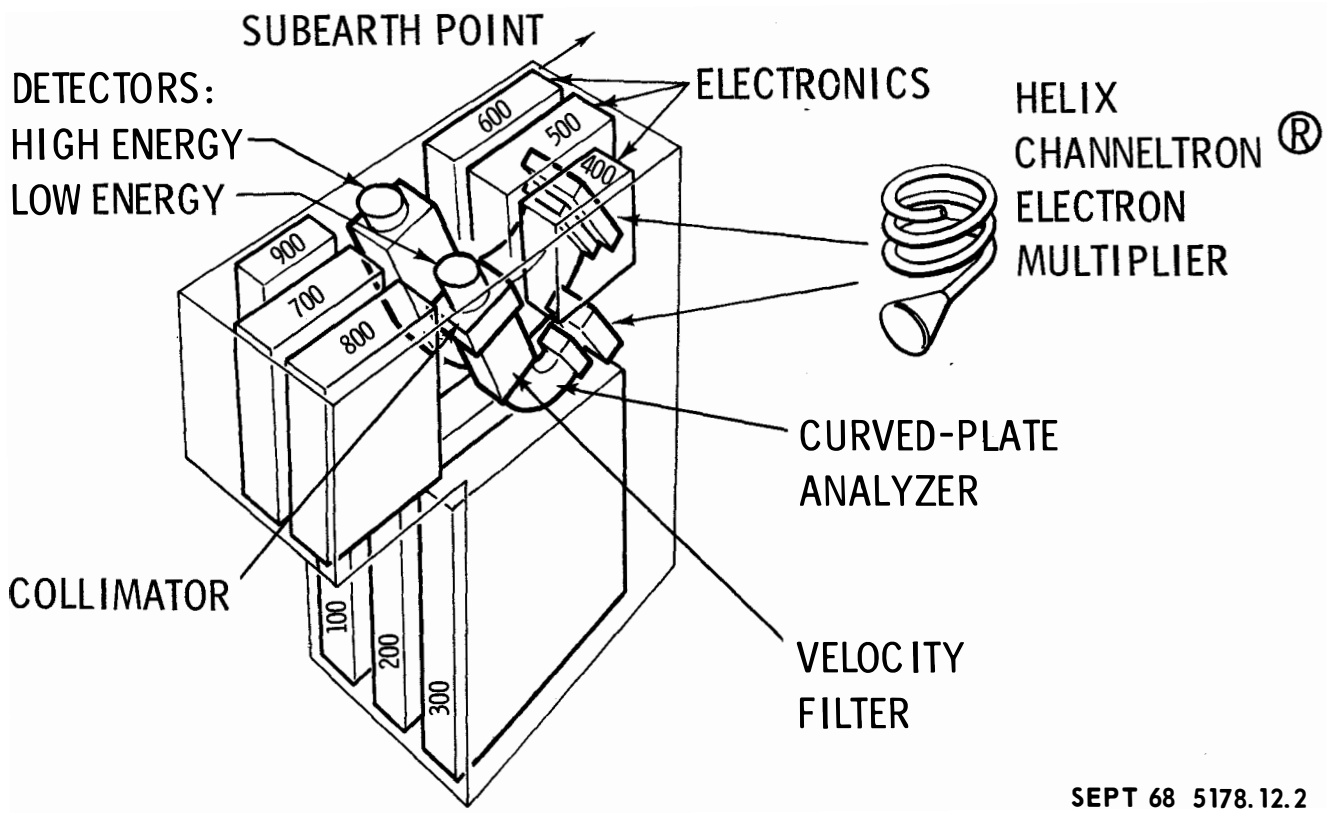

SEPT 68 5178.12.2

CCIG INSTRUMENT

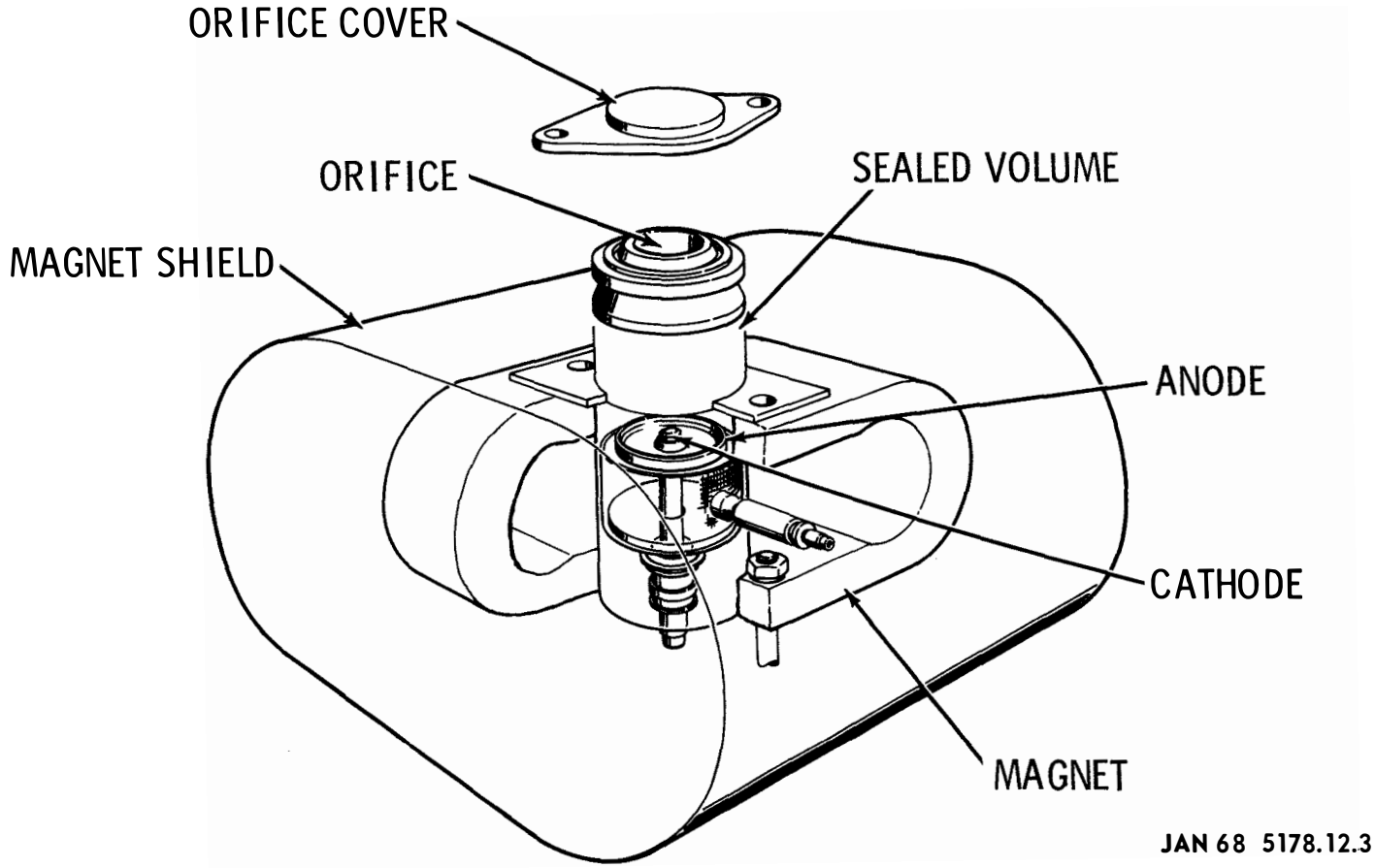

SIDE GENERAL FEATURES

MEASURE IONIC ENVIRONMENT OF MOON

DETECT POSITIVE IONS
- RESULTING FROM UV IONIZATION OF THE LUNAR ATMOSPHERE
- FREE STREAMING & THERMALIZED SOLAR WIND

DETERMINE
- DENSITY OF LUNAR ATMOSPHERE (INC CHANGES WITH TIME)
- LOSS RATE OF CONTAMINANTS LEFT BY ASTRONAUT & LM

HIGH ENERGY CURVED PLATE ANALYZER (HECPA)
- NO VELOCITY FILTER
- DETERMINES FLUX (PARTICLES/SEC) WITHIN STEPPED RANGES OF ENERGY PER UNIT CHARGE

LOW ENERGY CURVED PLATE ANALYZER (LECPA)
- PRECEDED BY VELOCITY FILTER (CROSSED ELECTRIC & MAGNETIC FIELDS)
- DETERMINES FLUX (PARTICLES/SEC) WITHIN STEPPED RANGES OF VELOCITY & ENERGY PER UNIT CHARGE

COLD CATHODE ION GAUGE (CCIG)
- MEASURES DENSITY OF NEUTRAL ATOMS (THIS, WITH TEMP OF GAUGE, ALLOWS CALCULATION OF LUNAR ATMOSPHERE PRESSURE)

- PLACED ON GROUND PLANE (WIRE MESH SCREEN) WITH VOLTAGE APPLIED BETWEEN INSTRUMENT & SCREEN TO ASSESS LUNAR SURFACE ELECTRICAL FIELD EFFECTS
- SIDE ELECTRONICS INPUT CIRCUITS PROVIDE ISOLATION FROM ALSEP (POWER & SIGNAL)

JAN 68 5178.12.4

SIDE PERFORMANCE

HECPA

- ENERGY RANGE: 10 ev TO 3500 ev PER UNIT CHARGE
- ANGLE OF COVERAGE: $30^\circ \times 6^\circ$
- ALIGNMENT:
  - $\pm 5^\circ$ TO LUNAR EQUATOR
  - 15° OFF VERTICAL & POINTED AWAY FROM SUB-EARTH POINT
- MEASUREMENT TECHNIQUE: CURVED PLATE ANALYZER FOLLOWED BY CHANNELTRON® ELECTRON MULTIPLIER
  - CURVED PLATE ANALYZER USES ELECTROSTATIC FIELD (BALANCED POTENTIAL ON PLATES) TO PERFORM ENERGY RESOLUTION
  - PLATE VOLTAGES: 20 STEPS BETWEEN 2.5 & 875 VOLTS
  - ELECTRON MULTIPLIER DETECTS IONS PASSED BY CURVED PLATE ANALYZER & SUPPLIES CURRENT PULSE ($>10^{-13}$ COULOMBS) TO PREAMP
  - ELECTRON MULTIPLIER OPERATES WITH -3500 VOLT EXCITATION

LECPA

- RANGE:
  - MASSES UP TO 130 AMU
  - ENERGIES 0.2 EV TO 48.6 EV PER UNIT CHARGE
  - VELOCITIES 4×10^4 CM/SEC TO 9.35×10^6 CM/SEC
- ANGLE OF COVERAGE: $30^\circ \times 6^\circ$
- ALIGNMENT:
  - $\pm 5^\circ$ TO EQUATOR
  - 15° OFF VERTICAL & POINTED AWAY FROM SUB-EARTH POINT
- MEASUREMENT TECHNIQUE: VELOCITY FILTER, FOLLOWED BY CURVED PLATE ANALYZER, FOLLOWED BY CHANNELTRON® ELECTRON MULTIPLIER
  - VELOCITY FILTER: WEIN TYPE (CROSSED ELECTRIC & MAGNETIC FIELDS
    - 500 GAUSS ALNICO, DOUBLE-C CONSTRUCTION MAGNET (62.5 GRAMS)
    - PARALLEL ELECTRICAL PLATES WITH BALANCED POTENTIAL HAVING 120 STEPS BETWEEN 0.12 & 28 VOLTS
  - CURVED PLATE ANALYZER HAS 6 STEPS BETWEEN 0.1 & 24.3 VOLTS
  - ELECTRON MULTIPLIER SAME AS HECPA

CCIG

- RANGE: 10^{-6} TO 10^{-12} TORR
- OPERATING VOLTAGE: +4500 V
- MAGNETIC FIELD: 1020 GAUSS
- POWER DISSIPATION: 5 MILLIWATTS
- GAGE BODY CONSTRUCTED OF 304 STAINLESS STEEL
- THREE OVERLAPPING MEASUREMENT RANGES (SWITCHED BY INTERNAL LOGIC) HANDLE CURRENT MEASUREMENTS BETWEEN 1×10^{-13} & 1×10^{-6} AMPS
- PLACED ON SURFACE OUTSIDE GROUND PLANE

GROUND PLANE

- WIRE MESH SCREEN ≈2 FT DIAM
- 24 VOLTAGE STEPS (11 POSITIVE, 11 NEGATIVE, & 2 ZEROS) BETWEEN -27.6 & +27.6 VOLTS

JAN 68 5178.12.5

SIDE BLOCK DIAGRAM

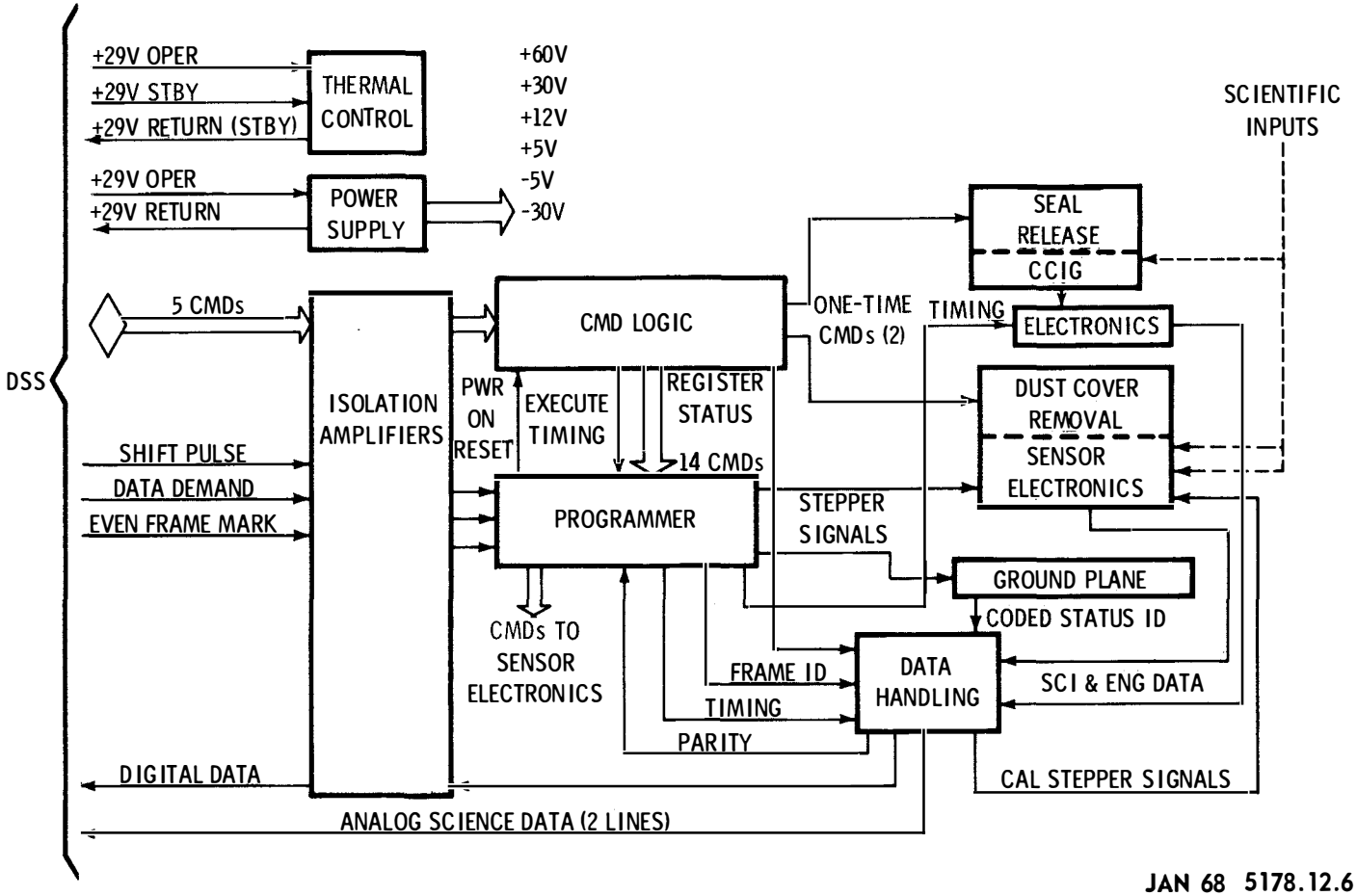

JAN 68 5178.12.6

SIDE COMMAND FUNCTION

- ALSEP SUPPLIES 5 CMDs:

OCTAL	NAME	
104	SIDE LOAD 1	TRANSMITTED FIRST. AFTER PROPER LOADING OF SIDE CMD INPUT REGISTER IS VERIFIED VIA TM, THEN EXECUTE IS TRANSMITTED.
105	SIDE LOAD 2	
106	SIDE LOAD 3	
107	SIDE LOAD 4	
110	SIDE EXECUTE	

- IF LOAD CMDs ARE NOT PROPERLY RECEIVED, INPUT REGISTER CAN BE CLEARED BY TRANSMITTING ALL LOADS (1, 2, 3 & 4) & THEN EXECUTE
- SIDE ENCODES 15 DIFFERENT CMD COMBINATIONS (INC REGISTER RESET)
- TWO OF THE 15 ARE ALSO USED (VIA ONE-TIME REGISTER) TO PERFORM THE ONE-TIME FUNCTIONS OF CCIG SEAL BREAK & SIDE DUST COVER REMOVAL (THE FIRST TIME THEY ARE TRANSMITTED)
- CMDs ARE STROBED FROM INPUT REGISTER (BUFFER) TO MODE REGISTER WHEN EXECUTED (SIMULTANEOUSLY DECODED & APPLIED)
- TM OF MODE REGISTER INDICATES WHAT THE LAST CMD WAS; THEREFORE, HELPS VERIFY WHAT MODE THE SIDE IS IN

SIDE COMMAND ENCODING

ALSEP OCTAL CMD SEQUENCE					SYMBOL	FUNCTION	COMMENTS
104	105	106	107	110			
	X			X	CI-01	CCIG SEAL BREAK	ONE-TIME CMDs
			X	X	CI-02	SIDE DUST COVER GO	
X				X	CI-06	GROUND PL STEP PROG ON/OFF	THESE CMDs MODIFY DATA OUTPUT MODE BY CHANGING LENGTH OF SIDE SEQUENCE OR CYCLE — REPETITIVE CMDs
	X			X	CI-07	RST SIDE FRAME CNTR AT 10	
X	X			X	CI-08	RST SIDE FRAME CNTR AT 39	
		X		X	CI-09	RST V/FILT CNTR AT 9	
X		X		X	CI-10	RST SIDE FRAME CNTR AT 79	
	X	X		X	CI-11	RST CNTRs AT 79 & 9	
X	X	X		X	CI-12	X10 ACCUM INTERVAL ON/OFF	
			X	X	CI-13	MASTER RST (NORMAL MODE SEL)	
X			X	X	CI-14	V/FILT VOLTAGE ON/OFF	CMDs AFFECTING STEPPER VOLTAGES
	X		X	X	CI-15	LECPA HIGH VOLTAGE ON/OFF	
X	X		X	X	CI-16	HECPA HIGH VOLTAGE ON/OFF	
		X	X	X	CI-17	FORCE CONTINUOUS CAL	DATA CHANGE (SHORT SEQUENCE)
X		X	X	X	CI-18	CCIG HIGH VOLTAGE ON/OFF	POWER SWITCHING
	X	X	X	X	CI-19	CHANNELTRON HV ON/OFF	
X	X	X	X	X	CI-20	RST CMD INPUT REGISTER	INTERNAL TO CMD LOGIC
				X	NA	NOT USED	

JAN 68 5178.12.8

SIDE COMMAND LOGIC DIAGRAM

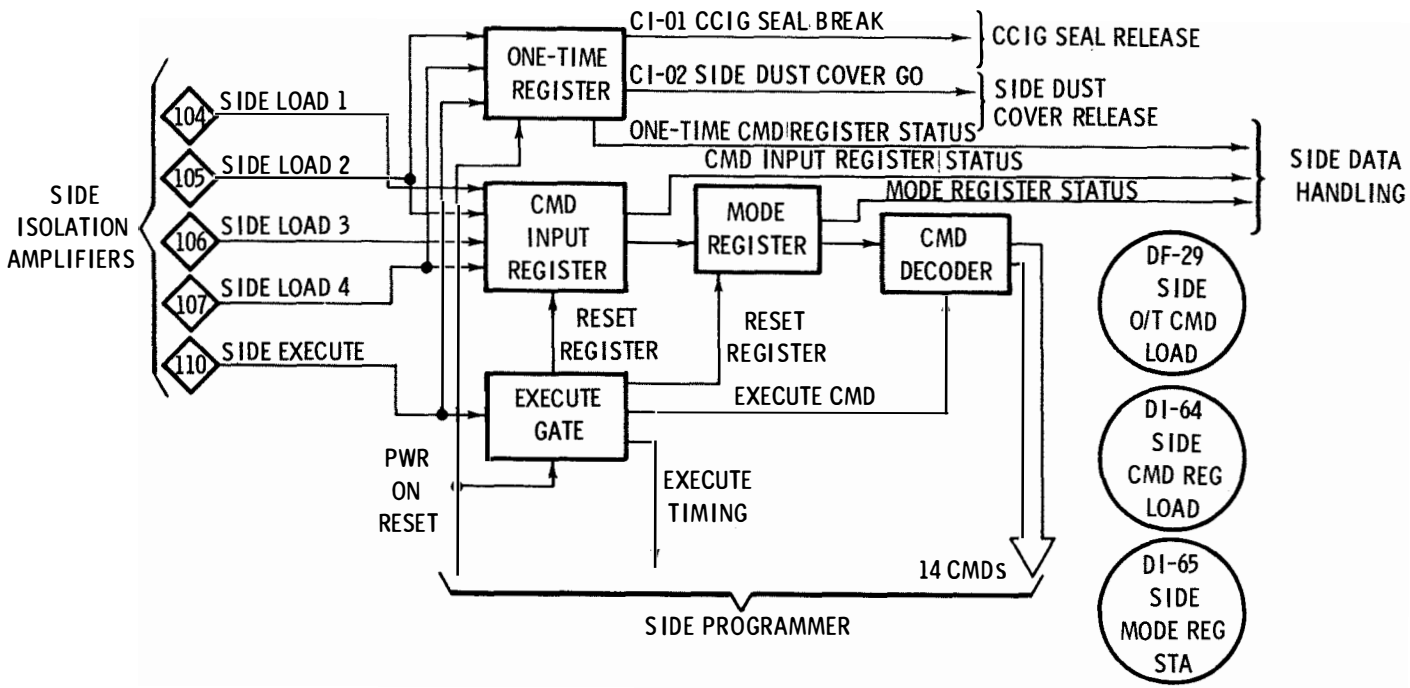

JAN 68 5178.12.9

SIDE PROGRAMMER FUNCTION

- PROVIDES TIMING & CONTROL SIGNALS TO
  - HECPA
  - VELOCITY FILTER
  - LECPA
  - CALIBRATION PULSER
  - GROUND PLANE
  - CCIG
- BASIC TIME REFERENCE IS GENERATED IN SIDE FRAME COUNTER
  - NORMALLY COUNTS 128 ALSEP EVEN FRAME MARKS (256 ALSEP FRAMES)
  - INITIATES HECPA, VELOCITY FILTER, & LECPA STEPS (ETC.) AT PROPER TIME IN SIDE FRAME, DEPENDING ON SIDE FRAME COUNT
  - COUNTER OPERATION MAY BE MODIFIED VIA GROUND CMD TO COUNT LESS THAN 128 (0-79, 0-39, 0-10, 120-127)
  - GROUND PLANE STEPS ONCE AT EACH SIDE FRAME COUNTER RESET UNLESS INHIBITED VIA GROUND CMD (24 GROUND PLANE STEPS)

SIDE PROGRAMMER DIAGRAM

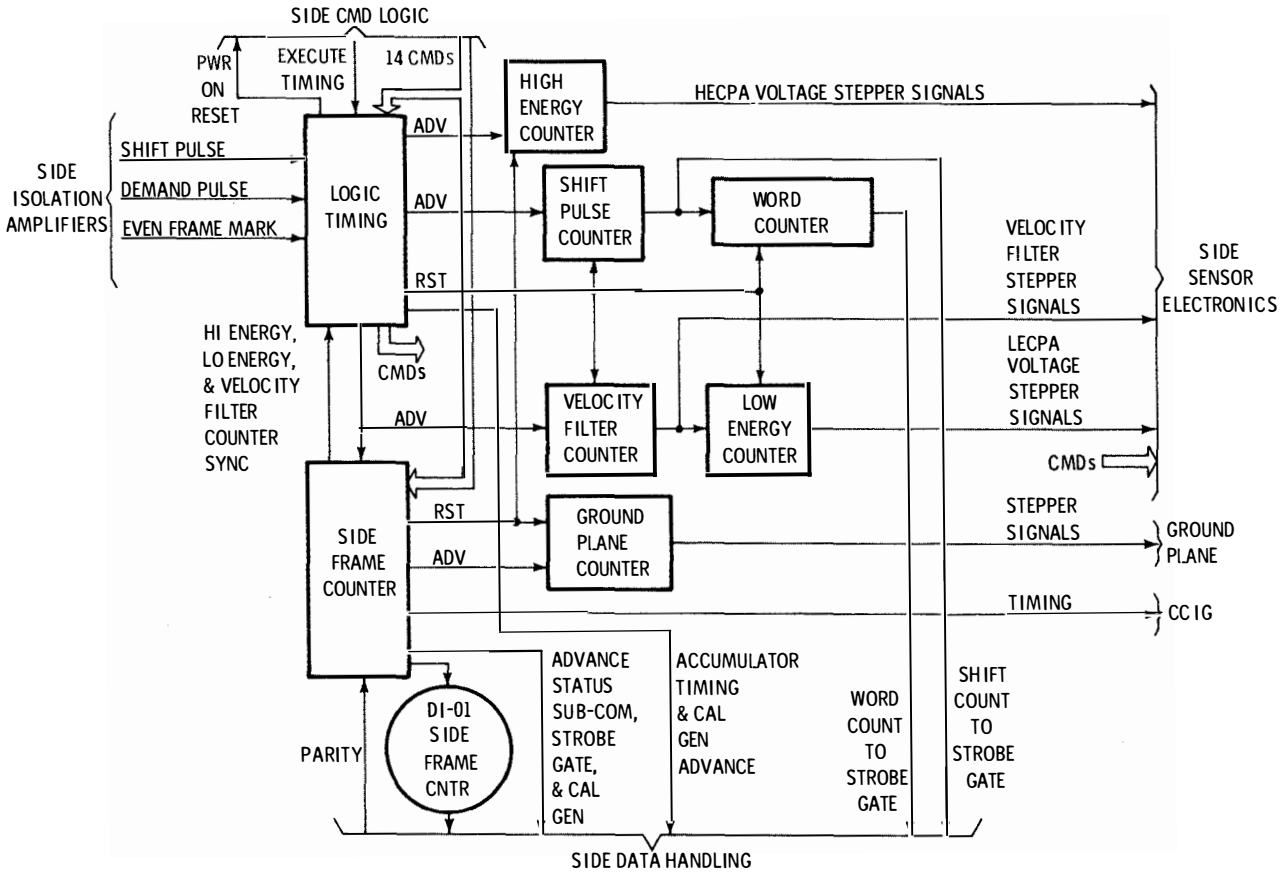

JAN 68 5178.12.11

SIDE ION DETECTION

- POSITIVE IONS PASSING THROUGH VELOCITY FILTER & LECPA (OR THROUGH HECPA) ARE DETECTED BY ELECTRON MULTIPLIERS WHICH SUPPLY A CURRENT PULSE, FOR EACH ION THAT ENTERED, TO DETECTOR AMPLIFIERS (DISCRIMINATORS)
- DISCRIMINATORS SEPARATE PULSES FROM BACKGROUND NOISE & AMPLIFY PULSE SIGNALS (ALSO LIMIT OUTPUT TO ≈ONE PULSE PER MICROSECOND)
- PULSES ARE APPLIED TO COUNT ACCUMULATORS (IN DATA HANDLING) & TO LOGARITHMIC COUNT RATE METERS (4V = 40,000 CNTS/SEC; 1V = 50 CNTS/SEC)
- WHEN SIDE FRAME COUNTER READS 120 TO 127 (EVERY 2.5 MIN, APPROX, AT NORMAL RATE) CAL SIGNAL PULSES ARE GATED THROUGH THE DETECTOR AMPLIFIERS AT THE FOLLOWING FREQUENCIES:

0	Hz (BACKGROUND)	IN SEQUENCE
136.72	Hz	
17,500	Hz	
560,000	Hz	

- DURING CALIBRATION, THE STEPPING VOLTAGES OF HECPA & LECPA ARE PROGRAMMED TO ZERO & THE VELOCITY FILTER TO THE MAXIMUM POSITIVE. THIS PREVENTS ION COUNTS DURING CALIBRATION
- SIDE DUST COVER RELEASED BY SOLENOID-OPERATED CATCH VIA GROUND CMD

JAN 68 5178.12.12

SIDE SENSOR ELECTRONICS

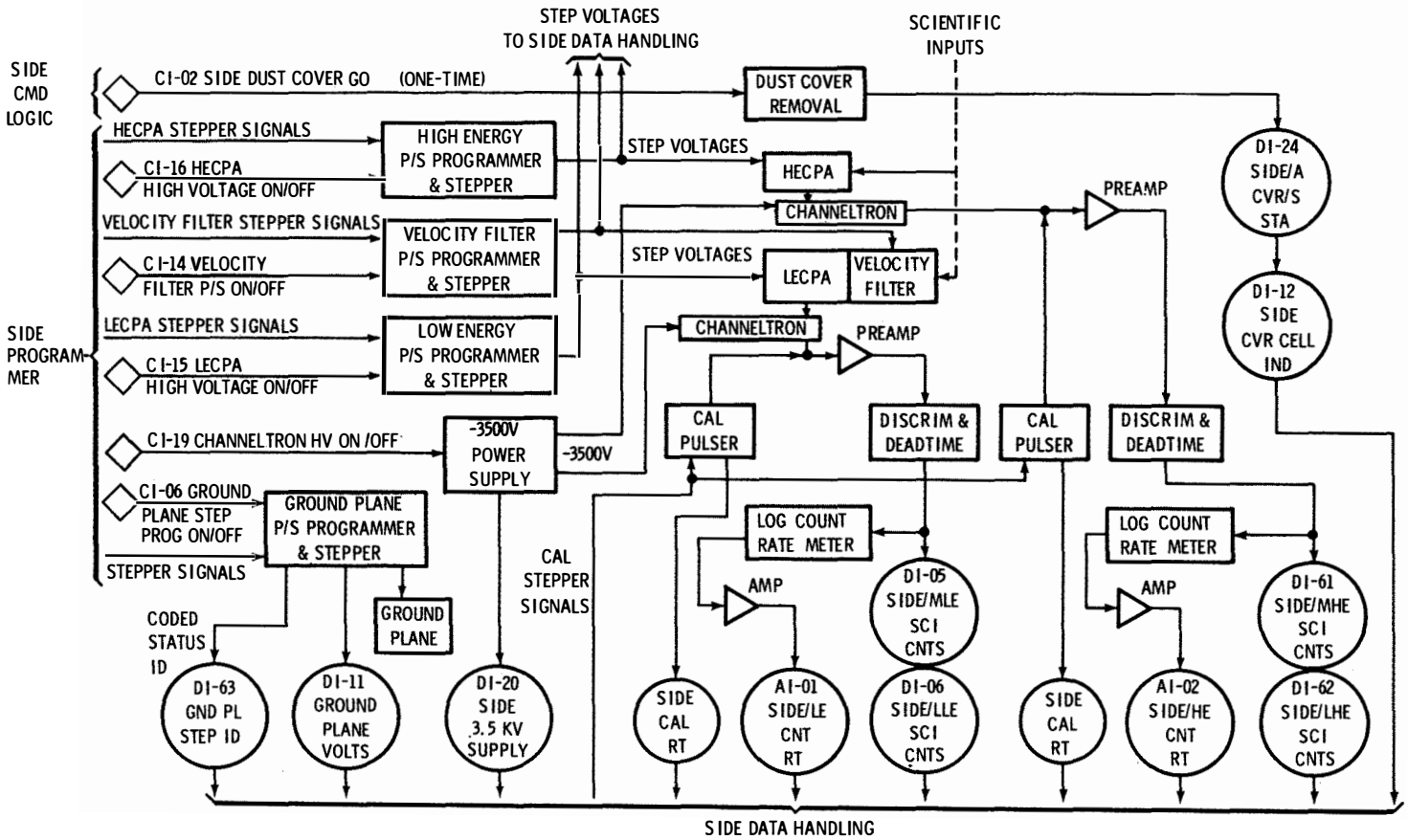

JAN 68 5178.12.13

CCIG FUNCTION

- CHARGED PARTICLES ENTERING THE SENSOR ARE DEFLECTED INTO ELONGATED SPIRAL PATHS BY THE COMBINATION OF MAGNETIC & ELECTROSTATIC FIELDS
- THESE PARTICLES COLLIDE WITH NEUTRAL ATOMS PRODUCING A LARGE NUMBER OF IONS & A CURRENT FLOW (DEPENDING ON THE NUMBER OF ATOMS) BETWEEN CATHODE & ANODE
- ELECTROMETER AMPLIFIER AMPLIFIES THE CURRENT FOR INPUT TO DATA HANDLING
- AUTOMATIC RANGE SELECTION (ALSO READ OUT VIA TM)
- THE NO-ION COUNT OUTPUT OF THE ELECTROMETER PROVIDES AUTOMATIC ZERO CORRECTION
- UPON DEMAND FROM SIDE FRAME COUNTER, A SEQUENCE OF PRECISELY CONTROLLED CURRENTS ARE GATED THROUGH THE ELECTROMETER INPUT CIRCUITS FOR CALIBRATION
- CCIG SEAL IS REMOVED BY AN EXPLOSIVE PISTON ACTUATOR (PIN-PULLER) WHICH RELEASES SPRING-LOADED COVER

JAN 68 5178.12.14

CCIG DIAGRAM

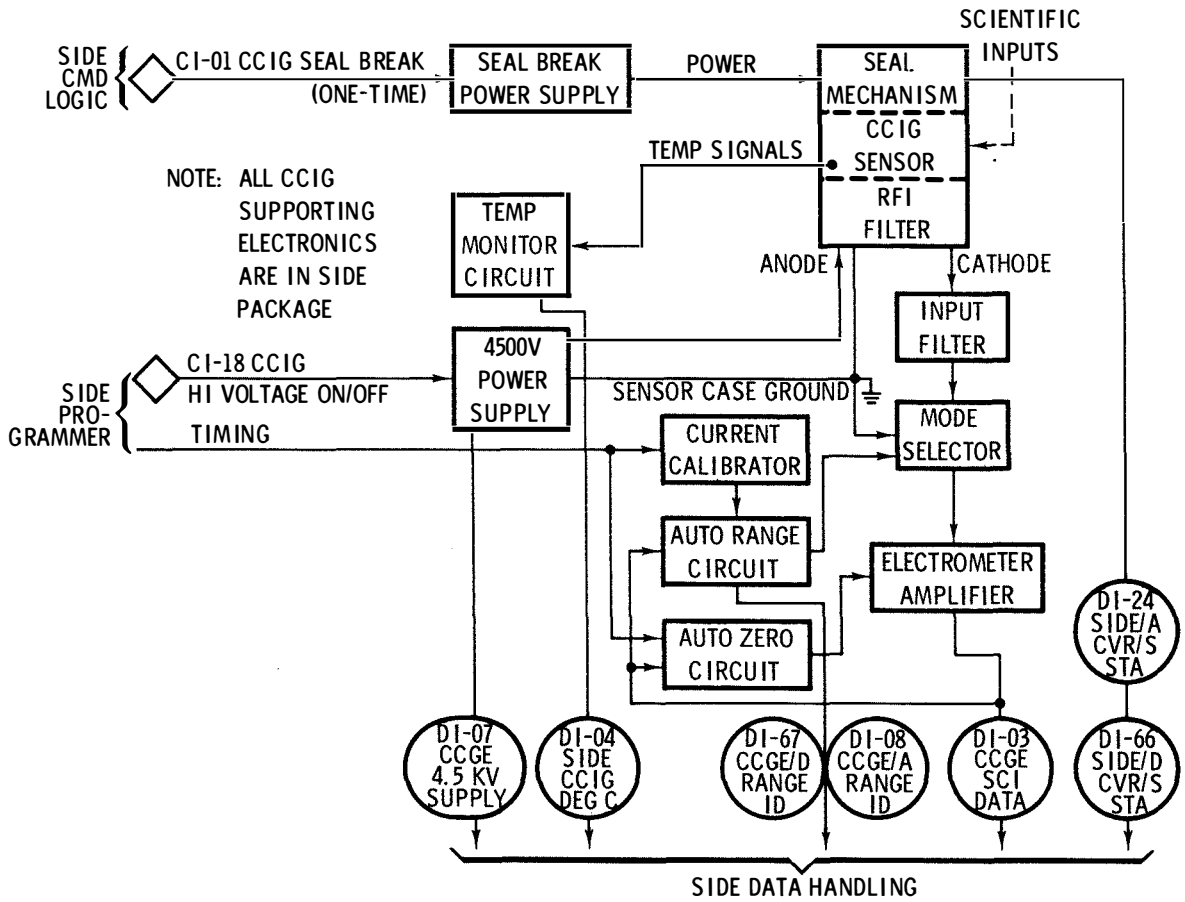

JAN 68 5178.12.15

SIDE DATA HANDLING

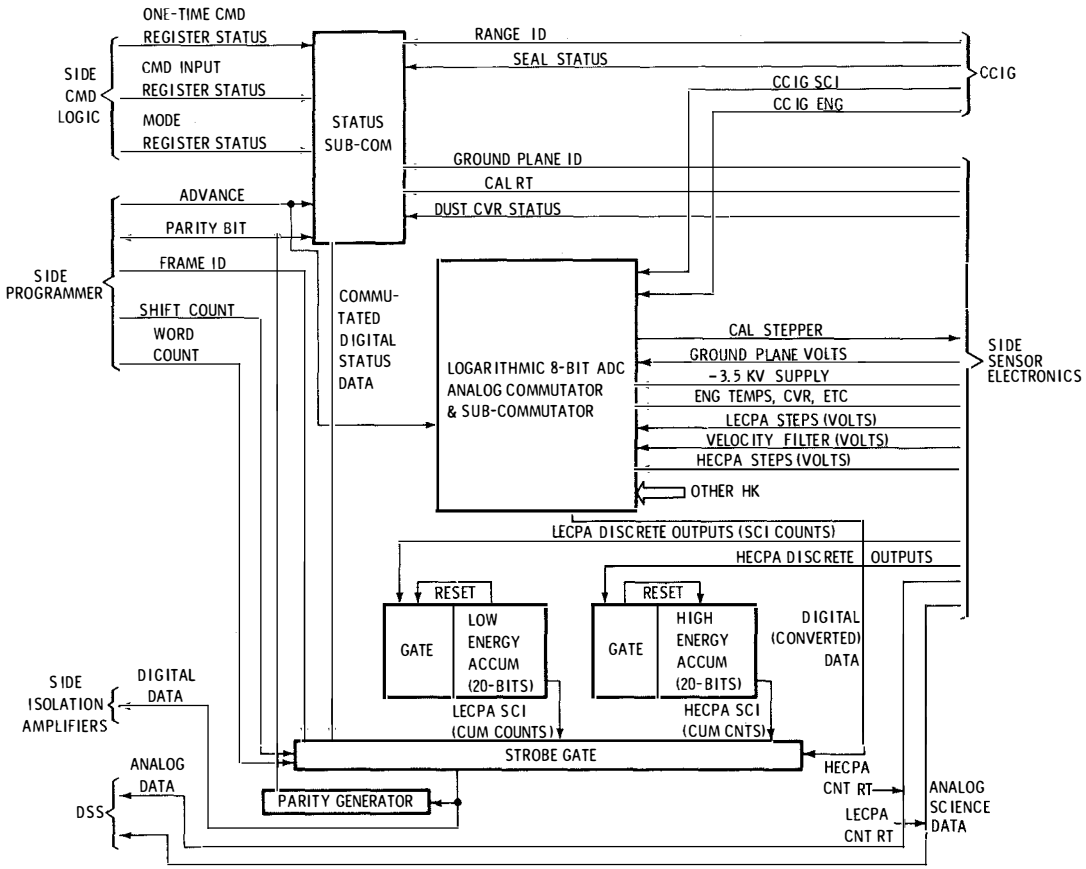

JAN 68 5178.12.16

SIDE THERMAL CONTROL

MECHANICAL

- OPERATING RANGE FOR ELECTRONICS: -20° C TO +80° C
- ELECTRONICS PACKAGE HAS OUTER GOLD COVER, OUTER CASE HAS INNER GOLD SURFACE (TWO GOLD SURFACES FACING EACH OTHER)
- OUTSIDE SURFACE OF OUTER CASE PAINTED WHITE
- BOTTOM OF CASE HAS THIN INSULATION BLANKET BETWEEN LEGS
- TOP OF PACKAGE HAS SECOND SURFACE MIRROR RADIATOR
  - DUST COVER PROTECTS MIRROR & APERTURES FROM DUST UNTIL AFTER LM ASCENT (ALSO PROTECTS ASTRONAUT FROM MIRROR REFLECTIONS)
  - CONDUCTIVE GRID OVER MIRROR PROVIDES EQUIPOTENTIAL SURFACE AROUND APERTURES

ELECTRICAL

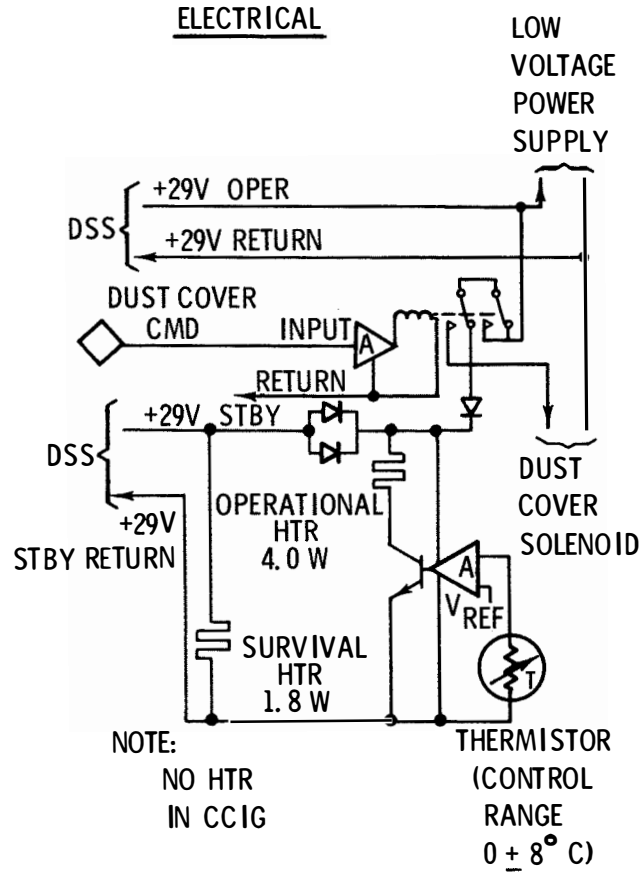

APR 69 5178.12.17

SIDE POWER SUPPLY

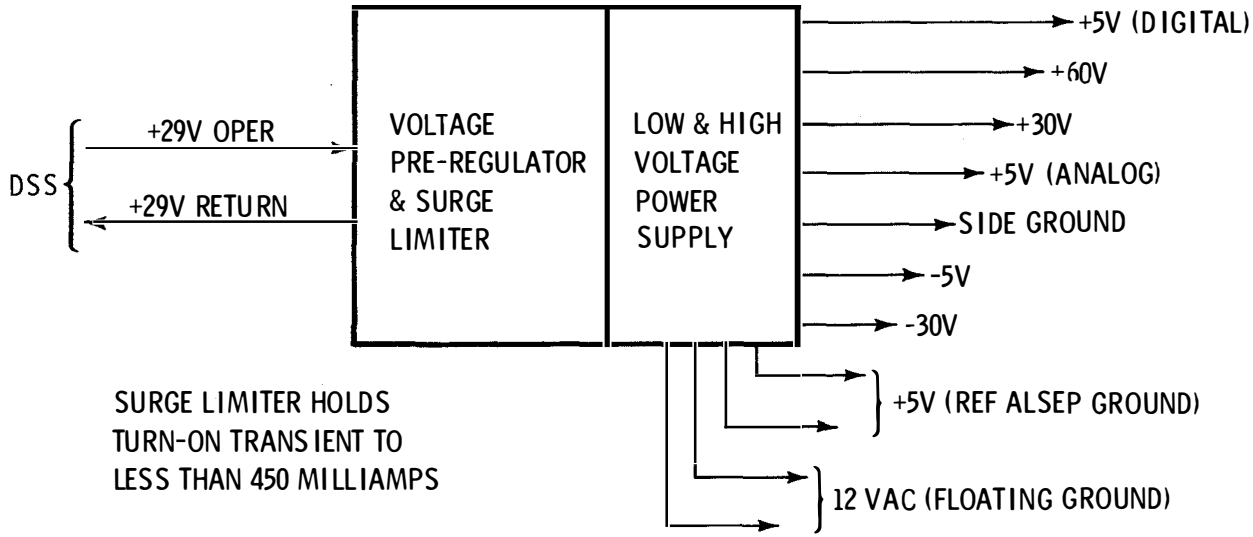

SURGE LIMITER HOLDS TURN-ON TRANSIENT TO LESS THAN 450 MILLIAMPS

SPECIAL PURPOSE POWER SUPPLIES:

- STEPPERS
  - HECPA 1.25V TO 438V
  - LECPA 0.05V TO 12.15V
  - VELOCITY FILTER 0.06V TO 14V

  } BALANCED VOLTAGES, + ON ONE TERMINAL - ON OTHER TERMINAL
- CHANNELTRON® ELECTRON MULTIPLIER -3500V
- COLD CATHODE ION GAUGE +4500V

JAN 68 5178.12.18

SIDE POWER PROFILE

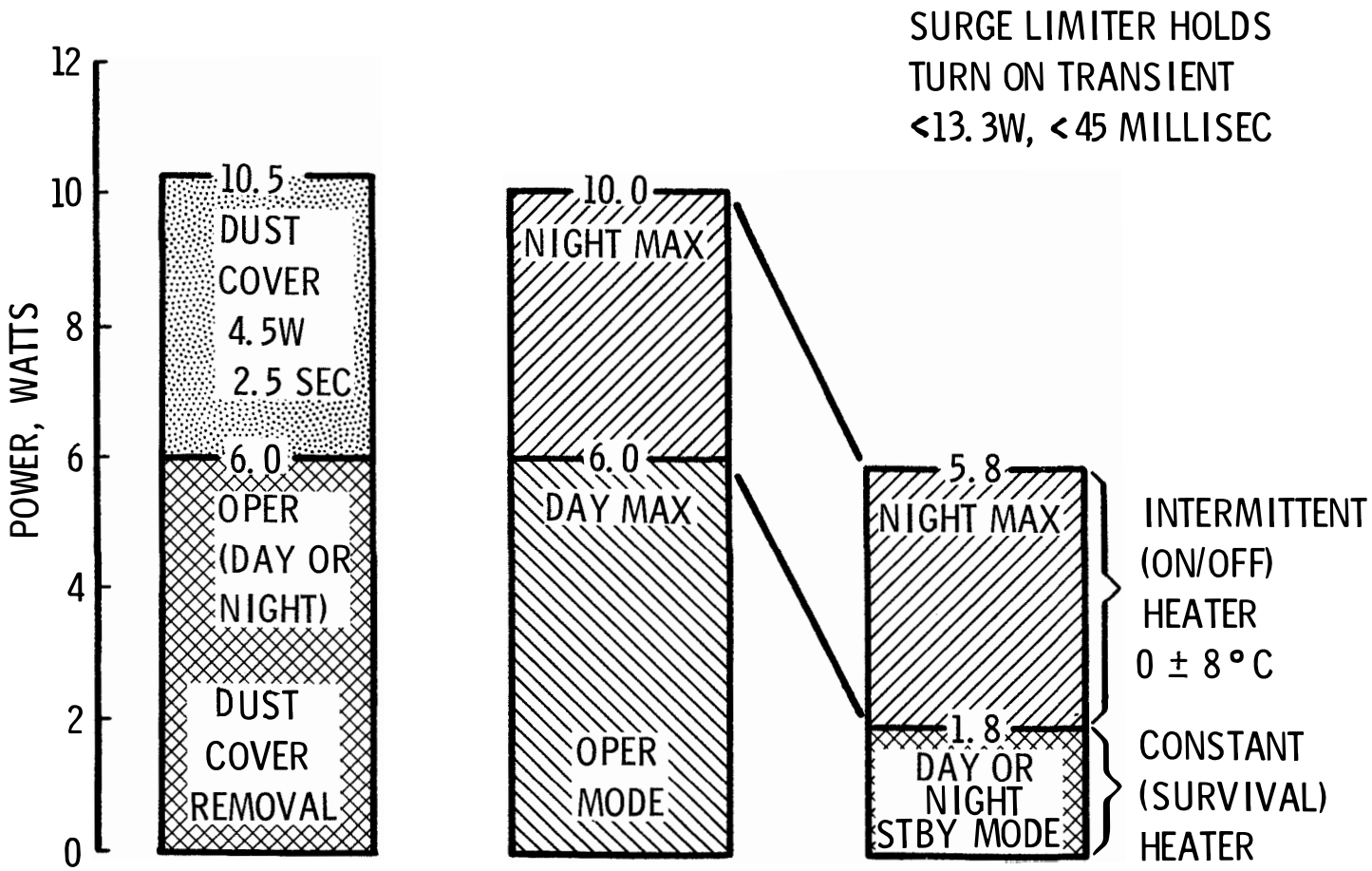

SEPT 68 5178.12.19

SIDE TIE-DOWN AND RELEASE

- SIDE ON SUBPALLET OF SUBPACK 2
- ASTRONAUT RELEASES 5 FASTENERS
  - 1 EXPER TIE-DOWN RELEASED BY ROTATING GROUND SCREEN TUBE
  - 4 EXPER TIE-DOWNS RELEASED BY USING UHT
  - CONNECTOR RELEASED BY USING UHT
- EXPERIMENT LIFTED USING UHT IN HANDLING SOCKET
- CONNECTOR LIFTED BY LANYARD
- ASTRONAUT DEPLOYS LEGS BY PULLING LANYARD
- PLACES EXPER ON LUNAR SURFACE
- PLUGS CONNECTOR INTO CENTRAL STATION
- REMOVES SCREEN FROM TUBE & DEPLOYS SCREEN
- LIFTS EXPER
- REMOVES CC IG
- STANDS EXPER ON SCREEN
- DEPLOYS CC IG (OFF SCREEN)

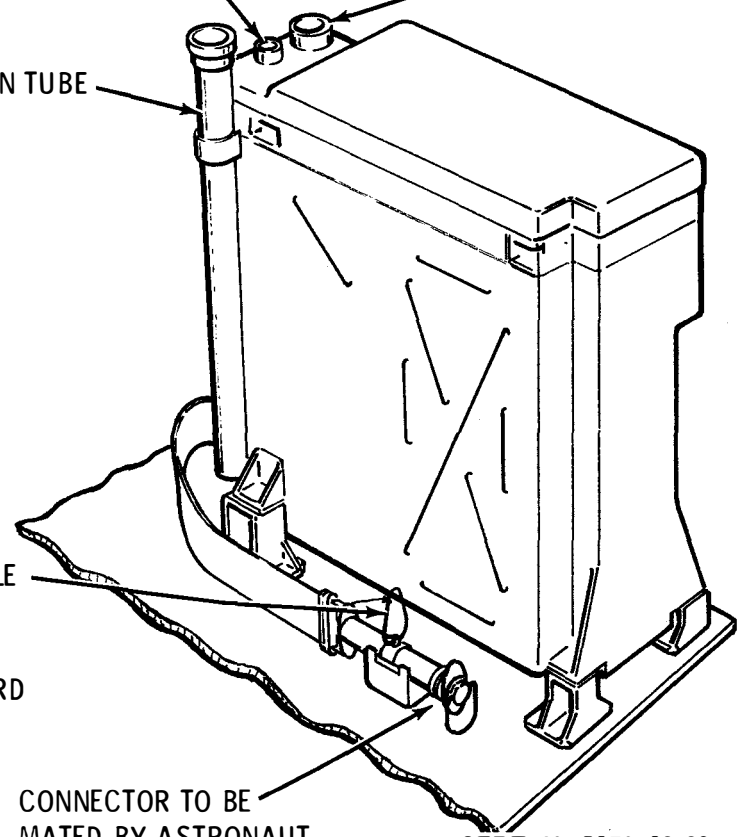

SEPT 68 5178. 12.20

SIDE EMPLACEMENT CRITERIA

	PARAMETER	REQUIREMENT	PRIORITY	INDICATOR	COMMENTS
DETECTOR	DISTANCE FROM SUBPACKAGE 1	55 ±5 FT	2	60 FT CABLE	TO MINIMIZE INTERFERENCE AT LSM LOCATION
DETECTOR	DIRECTION FROM SUBPACKAGE 1	$110^0 \pm 10^0$ FROM LSM (I.E., $\approx 70^0$ FROM LM)	2	EYEBALL	TO OBTAIN 80 FT SEPARATION FROM LSM & PREFERABLY 100 FT
DETECTOR	SITE SELECTION	SMOOTH	1	EYEBALL	SUITABLE FOR SCREEN
DETECTOR	LEVEL, WRT INDICATOR	5^0 OF HORIZ	1	BUBBLE	INTERACTS WITH ALIGNMENT
DETECTOR	ALIGN, WRT SHADOW	10^0 OF E-W	2	ARROW*	THERMAL & SCIENTIFIC REQUIREMENT
ION GAUGE	POSITION	OFF SCREEN, OPPOSITE LM, 5 FT FROM DETECTOR	1	5 FT CABLE	TO SATISFY ALIGNMENT REQUIREMENTS
ION GAUGE	ALIGN ORIFICE	20^0 OF N OR S	2	PAINT	AWAY FROM ($\pm 90^0$) ALL SUBSYSTEMS, LM, SUN & EARTH
	EXPERIMENT INTERRELATION	HEAVY MAGNET IN ION GAGE IS SHIELDED. IT AND MAGNETIC FIELD OF DETECTOR MUST BE SEPARATED FROM LSM (DIRECTION CRITERIA NOT PERTINENT ON OTHER EXPERIMENT COMBINATIONS)			
	SPECIAL REQUIREMENTS	*ARROW MUST POINT TOWARD SUBEARTH POINT (E OR W); HENCE, EXPERIMENT IS NOT BIDIRECTIONAL. FINAL ALIGNMENT IS BY SHADOWS ON LONG SIDES OF DETECTOR.			

SEPT 68 5178.12.21

SIDE ALIGNMENT MARKINGS

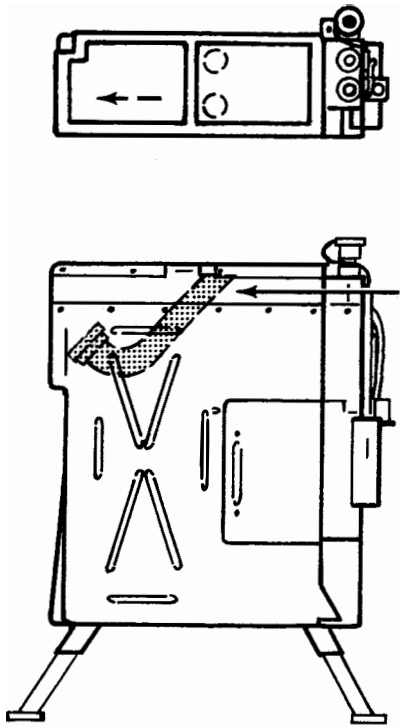

- ARROW POINTS EAST OR WEST: (±5°)
  BUT TOWARD THE SUBEARTH POINT
- DETECTORS POINT AWAY FROM SUBEARTH POINT

APR 69 5178.12.22

SIDE COMMANDS

OCTAL CMD NUMBERS

(105 & 110) CCIG SEAL BREAK

THIS CMD (CI-01) CAUSES THE ONE TIME FUNCTION OF CC IG SEAL BREAK. IT SIMULTANEOUSLY RESETS THE SIDE FRAME COUNTER AT 10 (DESCRIBED LATER). THIS CMD IS AN IRREVERSIBLE FUNCTION AND IS NECESSARY TO OBTAIN CC IG SCIENTIFIC DATA. THIS CMD IS ALSO GENERATED BY THE DELAYED CMD SEQUENCER (ALSEP TIMER).

(107 & 110) SIDE DUST COVER GO

THIS CMD (CI-02) CAUSES THE ONE TIME FUNCTION OF REMOVING THE SIDE DUST COVER. IT SIMULTANEOUSLY RESETS THE SIDE MASTER RESET (DESCRIBED LATER). THIS CMD IS AN IRREVERSIBLE FUNCTION AND IS NECESSARY TO OBTAIN SIDE SCIENTIFIC DATA. THIS CMD IS ALSO GENERATED BY THE DELAYED CMD SEQUENCER (ALSEP TIMER).

NOTE THE SIDE DUST COVER CAN BE REMOVED BY SENDING ANY CMD CONTAINING A 107 FOLLOWED BY 110 (SIMILARLY, SEAL BREAK 105 & 110).

HEATER CIRCUIT ATUOMATICALLY INTERRUPTED TO AVOID EXCESSIVE CURRENT DEMAND.

(104 & 110) GROUND PLANE STEP PROG ON/OFF

THIS CMD (CI-06) IS A 2-STATE CMD (ON/OFF) THAT CONTROLS THE OPERATION OF THE GROUND PLANE STEP PROGRAMMER. SIDE ACTIVATION PRESETS THE PROGRAMMER TO ON. THE GROUND PLANE VOLTAGE IS THEN STEPPED THROUGH TWENTY-FOUR LEVELS (ONE LEVEL/SIDE SEQUENCE). TRANSMISSION OF THIS CMD WILL CAUSE THE STEP PROGRAMMER TO STOP AND HOLD A FIXED VOLTAGE. RETRANSMISSION WILL START THE STEP PROGRAMMER AND DOES NOT RESET VOLTAGE LEVEL TO ZERO BUT CONTINUES TO STEP FROM THE PREVIOUS LEVEL.

(105 & 110) RESET SIDE FRAME COUNTER AT 10

THIS CMD (CI-07) IS A MODE CMD. (INITIATION OF A MODE CMD CHANGES THE OPERATIONAL DATA FORMAT CHARACTERISTICS). UPON RECEIPT OF THE CMD, THE EXPERIMENT RESETS TO SIDE FRAME ZERO, THEN STEPS NORMALLY TO SIDE FRAME 10 BEFORE RESETTING AGAIN TO ZERO. THE VELOCITY FILTER, HIGH AND LOW ENERGY CURVED PLATE ANALYZERS STEP THROUGH THE VALUES OBTAINED FOR THESE SIDE FRAMES IN THE NORMAL MODE OF OPERATION. THE GROUND PLANE VOLTAGE STEPS THROUGH THE NORMAL 24 STEPS, ONE STEP PER 11-FRAME SEQUENCE.

(104, 105 & 110) RESET SIDE FRAME COUNTER AT 39

THIS CMD (CI-08) IS A MODE CMD. UPON RECEIPT OF THE CMD, THE EXPERIMENT OPERATES IN A SIMILAR FASHION TO THE RESET AT 10 MODE EXCEPT THAT IT RESETS AT SIDE FRAME 39.

(106 & 110) RESET VELOCITY FILTER COUNTER AT 9

THIS CMD (CI-09) IS A MODE CMD. THE EXPERIMENT, IN THIS MODE, EXECUTES THE NORMAL 128 SIDE FRAME SEQUENCE. HOWEVER, THE VELOCITY FILTER VOLTAGE ONLY EXECUTES THE FIRST 10 OF ITS NORMAL 20-STEP PROGRAM. THAT IS, AT SIDE FRAME 10, INSTEAD OF COMPLETING THE 20 STEPS, THE VELOCITY FILTER ASSUMES THE VALUE OF SIDE FRAME 20 IN THE NORMAL MODE. SIMILARLY AT SIDE FRAME 20, THE FILTER ADOPTS THE NORMAL MODE VALUE OF SIDE FRAME 40. THIS OPERATION CONTINUES FOR THE COMPLETE 128 SIDE FRAMES. THE LOW ENERGY CURVED PLATE ANALYZER, INSTEAD OF MAINTAINING ITS VALUE FOR 20 SIDE FRAMES, STEPS TO THE NEXT VALUE EVERY 10 SIDE FRAMES. THIS MEANS THAT THE PROGRAM FROM SIDE FRAME 60 TO 119 IS A REPETITION OF 0 TO 59.

(104, 106 & 110) RESET SIDE FRAME COUNTER AT 79

THIS CMD (CI-10) IS A MODE CMD. UPON RECEIPT OF THE CMD, THE EXPERIMENT OPERATES IN A SIMILAR FASHION TO THE RESET AT 10 MODE EXCEPT THAT IT RESETS AT SIDE FRAME 79.

(105, 106 & 110) RESET FRAME CNTR AT 79 & FILTER CNTR AT 9

THIS CMD (CI-11) IS A MODE CMD. UPON RECEIPT OF THE CMD, THE EXPERIMENT PERFORMS PROGRAM OF RESET VELOCITY FILTER COUNTER AT 9, BUT THE PROGRAM STOPS AT SIDE FRAME 79 AND REPEATS.

THE PROGRAM STEPS FOR OTHER VOLTAGES AND DATA COMMUTATION ARE NORMAL UP TO SIDE FRAME 79.

(104, 105, 106 & 110) X10 ACCUMULATION INTERVAL ON/OFF

THIS CMD (CI-12) IS A 2-STATE CMD. REPEATED TRANSMISSION CHANGES THE ACCUMULATION PERIOD OF THE HECPA & LECPA SCIENCE DATA BACK & FORTH BETWEEN ≈1.2 SEC & ≈12 SEC. IN THE X10 SETTING, THE SIDE FRAME COUNTER & ASSOCIATED COMMUTATED ENGINEERING DATA ARE REPEATED 10 TIMES WHILE THE SCIENCE DATA READS PROGRESSIVE ACCUMULATIONS OF PULSES. AFTER 10 REPETITIONS AT A PARTICULAR SETTING, THE PROGRAM ADVANCES TO THE SETTINGS OF THE NEXT SIDE FRAME NUMBER.

THE X10 ACCUMULATION MODE CAN BE USED WITH ANY OF THE COUNTER RESET DATA MODES.

(107 & 110) MASTER RESET

THIS CMD (CI-13) IS A MODE CMD. UPON RECEIPT OF THE CMD, THE EXPERIMENT WILL RETURN TO THE NORMAL OPERATIONAL MODE AS FOLLOWS:

- REMOVE ALL SHORT SEQUENCES
- RESET SIDE FRAME COUNTER (INC HECPA, LECPA & VELOCITY FILTER COUNTERS)

NOTE: THIS DOES NOT DISTURB ANY ON/OFF CMDs (HV OR STEPPERS INC GROUND PLANE) OR X10 ACCUMULATION INTERVAL

(104, 107 & 110) VELOCITY FILTER VOLTAGE ON/OFF

THIS CMD (CI-14) IS A 2-STATE CMD. REPEATED TRANSMISSION TURNS ON & OFF THE POWER SUPPLY FOR VELOCITY FILTER STEPS.

(105, 107 & 110) LECPA HIGH VOLTAGE ON/OFF

THIS CMD (CI-15) IS A 2-STATE CMD. REPEATED TRANSMISSION TURNS ON & OFF THE POWER SUPPLY FOR LECPA STEPS.

(104, 105, 107 & 110) HECPA HIGH VOLTAGE ON/OFF

THIS CMD (CI-16) IS A 2-STATE CMD. REPEATED TRANSMISSION TURNS ON & OFF THE POWER SUPPLY FOR HECPA STEPS.

(106, 107, & 110) FORCE CONTINUOUS CALIBRATION

THIS CMD (CI-17) IS A MODE CMD. UPON RECEIPT OF THIS CMD, THE SIDE FRAME COUNTER IS RESET TO 120 AFTER WHICH IT STEPS FROM 120 THROUGH 127 (IN THE NORMAL SEQUENCE) AND REPEATS 120-127 UNTIL TRANSMISSION OF SOME OTHER CMD. THESE STEPS CONTAIN ALL OF THE CALIBRATION PROGRAMS; HENCE, THERE IS NO ENG OR SCI DATA (EXCEPT CCIG SCII.

(104, 106, 107 & 110) CCIG HIGH VOLTAGE ON/OFF

THIS CMD (CI-18) IS A 2-STATE CMD. REPEATED TRANSMISSION TURNS ON & OFF THE POWER SUPPLY FOR THE CCIG SENSOR. IN THE OFF CONDITION, THERE IS NO CCIG SCIENTIFIC DATA OUTPUT.

(105, 106, 107 & 110) CHANNELTRON HIGH VOLTAGE ON/OFF

THIS CMD (CI-19) IS A 2-STATE CMD. REPEATED TRANSMISSION TURNS ON & OFF THE EXCITATION POWER SUPPLY FOR THE CHANNELTRON® ELECTRON MULTIPLIERS OF HECPA & LECPA; THUS, IN THE OFF CONDITION THERE IS NO ION DETECTOR SCIENTIFIC DATA.

(104, 105, 106, 107 & 110) RESET COMMAND INPUT REGISTER

THIS CMD (CI-20) IS USED TO CLEAR THE CMD REGISTER OF ANY CMD AWAITING EXECUTION. IF A FAULTY CMD IS ENTERED IN THE REGISTER, THE MISSING SIDE LOAD CMDs ARE TRANSMITTED FOLLOWED BY SIDE EXECUTE (OCTAL 110). ACTUATES ONE-TIME CMDs IF THEY HAVE NOT BEEN COMPLETED PREVIOUSLY.

SIDE DATA FORMAT

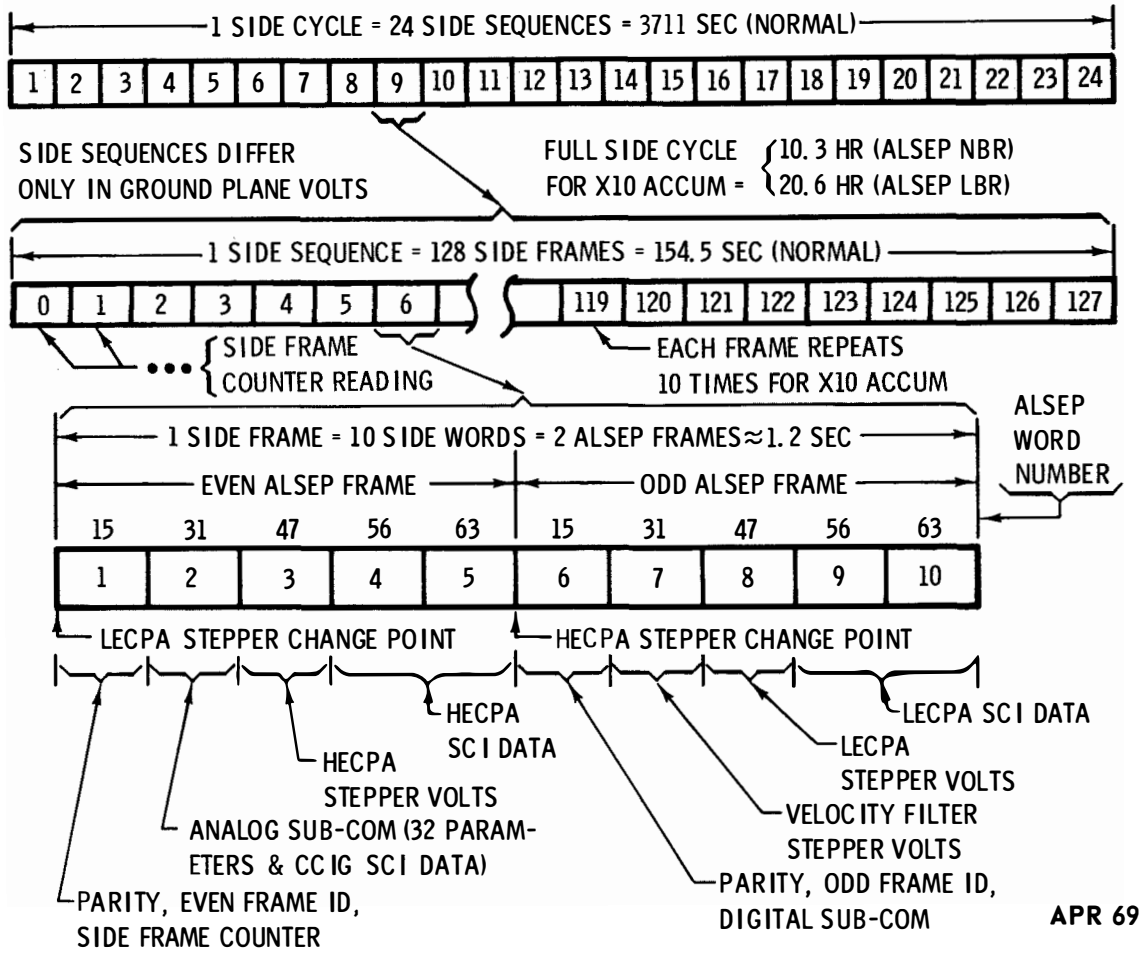

APR 69 5178.12.24

SIDE DATA MODES

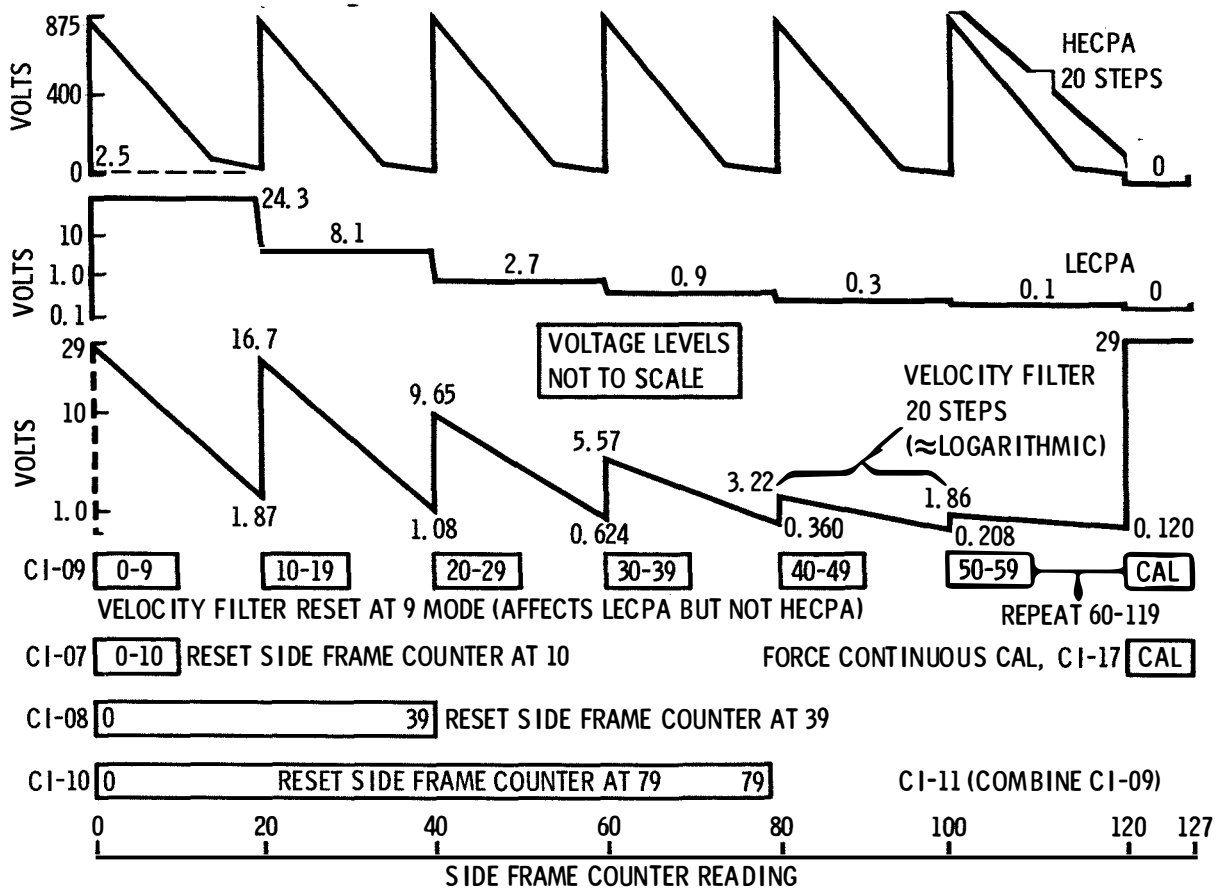

SEPT 68 5178.12.25

SIDE DATA WORD STRUCTURE

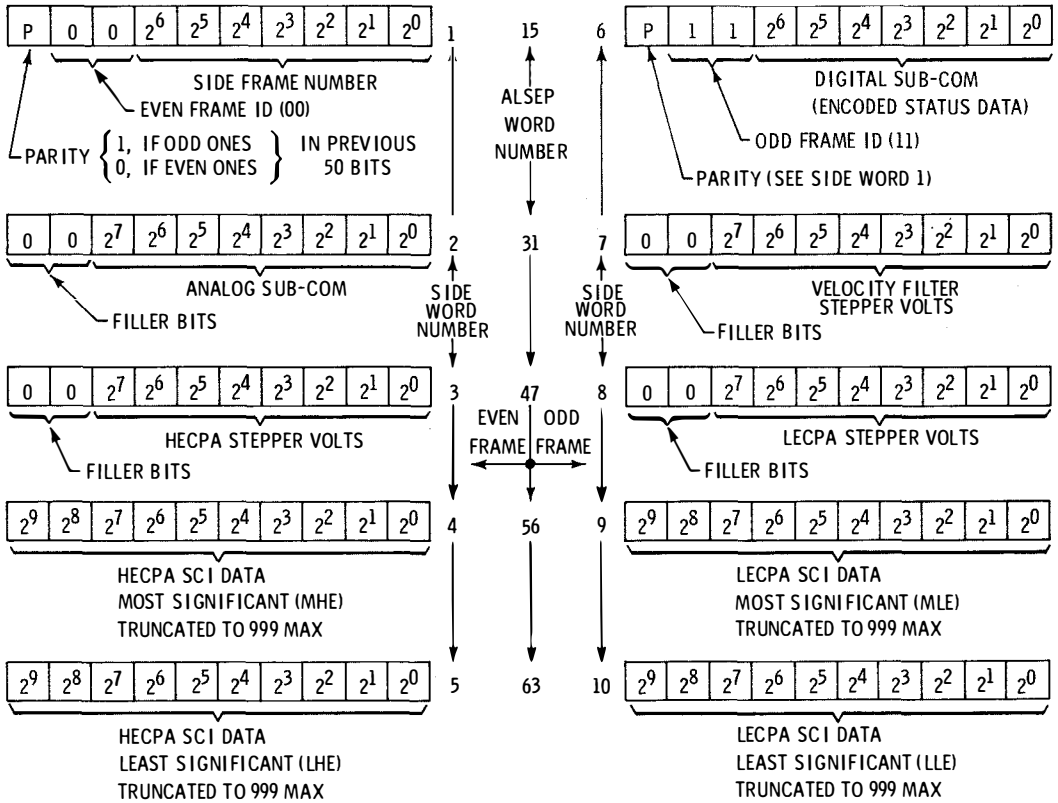

JAN 68 5178.12.26

SIDE ANALOG COMMUTATION

0							7	
+5V SUPPLY	CCIG SCI	CCIG TEMP	CCIG SCI	SIDE 2 TEMP	CCIG SCI	SIDE 3 TEMP	CCIG SCI	
+4.5 KV	CCIG SCI	RANGE ID	SIDE 4 TEMP	SIDE 5 TEMP	GND PLANE	SIDE CVR	GND PLANE	
+60 VOLTS	+30 VOLTS	SIDE/D +5V	GND VOLTS	-5 VOLTS	-30 VOLTS	SIDE 6 TEMP	-3.5 KV	
RANGE ID	ADC +30MV	ADC + REF	ADC +1.0V	ADC +12V	GND PLANE	ADC - REF	GND PLANE	RST
+5V SUPPLY	O/T CMD	CCIG TEMP	O/T CMD	SIDE 2 TEMP	ADC - 1.0V	SIDE 3 TEMP	ADC -12V	AT 39
+4.5 KV	CCIG SCI	RANGE ID	SIDE 4 TEMP	SIDE 5 TEMP	GND PLANE	ADC -30MV	GND PLANE	
+60 VOLTS	+30 VOLTS	SIDE/D +5V	GND VOLTS	-5 VOLTS	-30 VOLTS	SIDE 6 TEMP	-3.5 KV	
RANGE ID	ADC +30MV	ADC + REF	ADC +1.0V	ADC +12V	GND PLANE	ADC - REF	GND PLANE	
+5V SUPPLY	PRE/REG %	CCIG TEMP	CVR/SEAL	SIDE 2 TEMP	GND PLANE	SIDE 3 TEMP	CVR/SEAL	RST
+4.5 KV	CCIG SCI	RANGE ID	SIDE 4 TEMP	SIDE 5 TEMP	GND PLANE	SIDE CVR	GND PLANE	AT 79
+60 VOLTS	+30 VOLTS	SIDE/D +5V	GND VOLTS	-5 VOLTS	-30 VOLTS	SIDE 6 TEMP	-3.5 KV	
RANGE ID	ADC +30MV	ADC + REF	ADC +1.0V	ADC +12V	GND PLANE	ADC - REF	GND PLANE	
+5V SUPPLY	O/T CMD	CCIG TEMP	O/T CMD	SIDE 2 TEMP	ADC -1.0V	SIDE 3 TEMP	ADC -12V	
+4.5 KV	CCIG SCI	RANGE ID	SIDE 4 TEMP	SIDE 5 TEMP	GND PLANE	ADC -30MV	GND PLANE	
+60 VOLTS	+30 VOLTS	SIDE/D +5V	GND VOLTS	-5 VOLTS	-30 VOLTS	SIDE 6 TEMP	-3.5 KV	
RANGE ID	CCIG SCI	→						
120							127	

JAN 68 5178.12.27

SIDE DIGITAL COMMUTATION

0															7
GND PL ID		CMD REG	GND PL ID		MODE REG		GND PL ID		CMD REG		GND PL ID		CVR/SEAL		
		RANGE ID											MODE REG		
		CMD REG													
		RANGE ID													
		CMD REG											CVR/SEAL		RST AT 39
		RANGE ID											MODE REG		
		CMD REG													
		RANGE ID													
		CMD REG											CVR/SEAL		
		RANGE ID											MODE REG		RST AT 79
		CMD REG													
		RANGE ID													
		CMD REG											CVR/SEAL		
		RANGE ID											MODE REG		
		CMD REG													
CAL RT1 ID		CAL RT2 ID	CAL RT3 ID		CAL RT4 ID		CAL RT1 ID				CAL RT3 ID		CAL RT4 ID		
120															127

SEPT 68 5178.12.28

SIDE DATA SUMMARY

DI-01	SIDE FRAME CNTR
DI-02	SIDE/A +5V SUPPLY
DI-03	CCGE SCI DATA
DI-04	SIDE CC IG DEG C
DI-05	SIDE 2 DEG C
DI-06	SIDE 3 DEG C
DI-07	CCGE 4.5KV SUPPLY
DI-08	CCGE/A RANGE ID
DI-09	SIDE 4 DEG C
DI-10	SIDE 5 DEG C
DI-11	GND PLANE VOLTS
DI-12	SIDE CVR CELL IND
DI-13	SIDE +60V SUPPLY
DI-14	SIDE +30V SUPPLY
DI-15	SIDE/D +5V SUPPLY
DI-16	SIDE GND VOLTS
DI-17	SIDE -5V SUPPLY
DI-18	SIDE -30V SUPPLY
DI-19	SIDE 6 DEG C
DI-20	SIDE 3.5 KV SUPPLY
DI-21	SIDE ADC +1.0V
DI-22	SIDE ADC +30 MV
DI-23	SIDE ADC POS REF
DI-24	SIDE/A CVR/S STA
DI-25	SIDE ADC NEG REF
DI-26	SIDE ADC -1.0V
DI-27	SIDE ADC -12V
DI-28	SIDE ADC +12V
DI-29	SIDE PRE/REG PCT
DI-30	SIDE ADC -30MV
DF-29	SIDE O/T CMD LOAD
DI-40 through DI-60	HECPA STEP VOLTS
DI-61	SIDE/MHE SCI CNTS
DI-62	SIDE/LHE SCI CNTS
DI-63	GND PL STEP ID
DI-64	SIDE CMD REG LOAD
DI-65	SIDE MODE REG STA
DI-66	SIDE/D CVR/S STA
DI-67	CCGE/D RANGE ID
DI-68	SIDE CAL RT 1 ID
DI-69	SIDE CAL RT 2 ID
DI-70	SIDE CAL RT 3 ID
DI-71	SIDE CAL RT 4 ID
DI-72 through DI-99	SIDE V/FILT VOLTS
DJ-00 through DJ-97	SIDE V/FILT VOLTS
DJ-98	LECPA STEP VOLTS
DJ-99	LECPA STEP VOLTS
DF-00 through DF-04	LECPA STEP VOLTS
DF-05	SIDE/MLE SCI CNTS
DF-06	SIDE/LLE SCI CNTS
DF-07	SIDE PARITY BIT
DF-08	SIDE FRAME ID

DIGITAL "FILL" DATA

STBY, ALL ZEROS

OFF, ALL ONES

AI-01	SIDE/LE CNT RT
AI-02	SIDE/HE CNT RT

APR 69 5178.12.29

HEAT FLOW EXPERIMENT

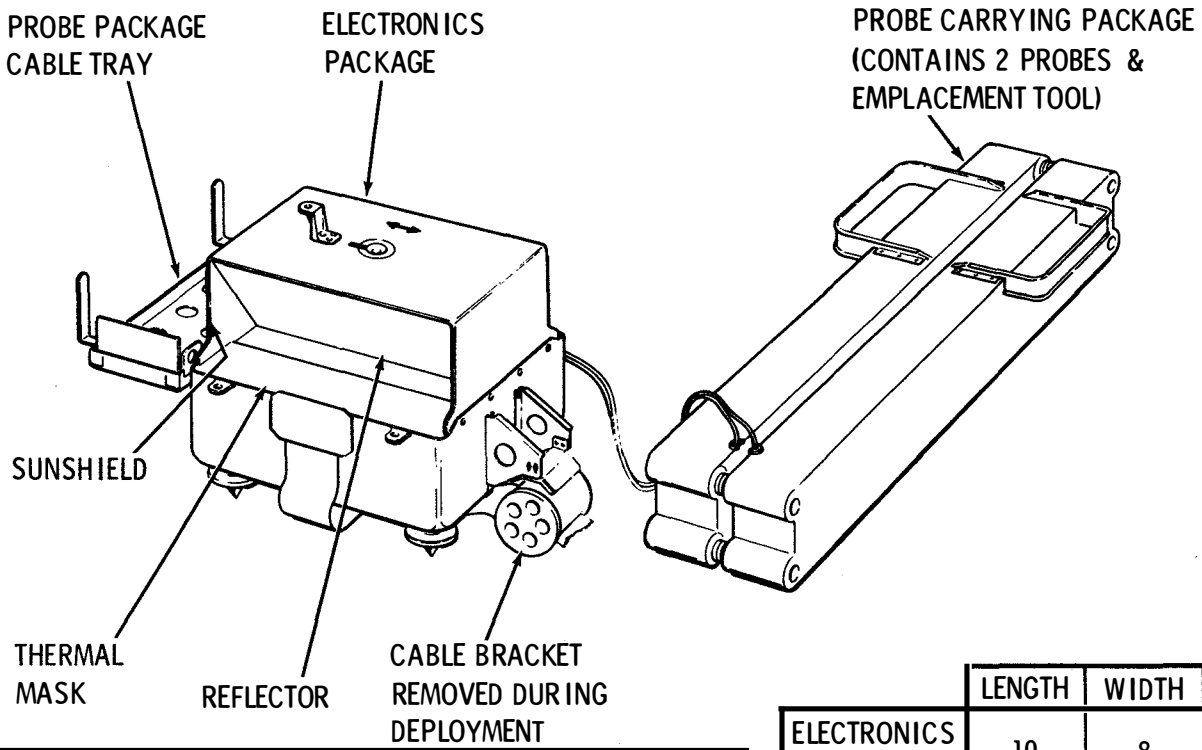

	LENGTH	WIDTH	HEIGHT
ELECTRONICS PACKAGE	10	8	7.5
PROBE PACKAGE	25.5	3.5	5

- COMPONENTS & FUNCTIONS
- DEPLOYMENT
- COMMANDS & DATA

APR 69 5178.13.1

HFE SIZE AND WEIGHT

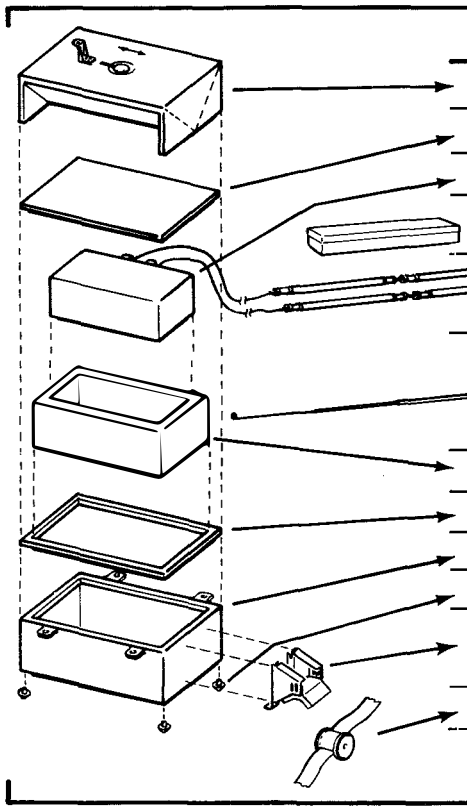

COMPONENT	SIZE, IN.	EARTH WT, LB
SUNSHIELD	10 x 6 x 4	.37
THERMAL PLATE	10 x 8 x 0.08	.40
ELECTRONICS	9 x 7 x 2.07	3.30
PROBE PACKAGE	25.5 X 4.5 X 3.5	3.67
PROBES (2), EACH	1 DIA x 43 LONG	
EMPLACEMENT TOOL (FULLY EXTENDED)	88 LONG	
THERMAL BAG	9.5 x 7.5 x 2.57	.30
INSULATING RING	10 x 8 x 0.4	.57
OUTER CASE	10 x 8 x 3.5	.46
LEGS (4)	0.75 x 0.75	.16
CABLE REEL SUPPORT, ETC.		.23
CABLE REEL	2.57 DIA x 2.6 LONG	.16
SCREWS, WASHERS, ETC.		.08
TOTAL		9.70

APR 69 5178.13.2

HFE PROBE DETAILS

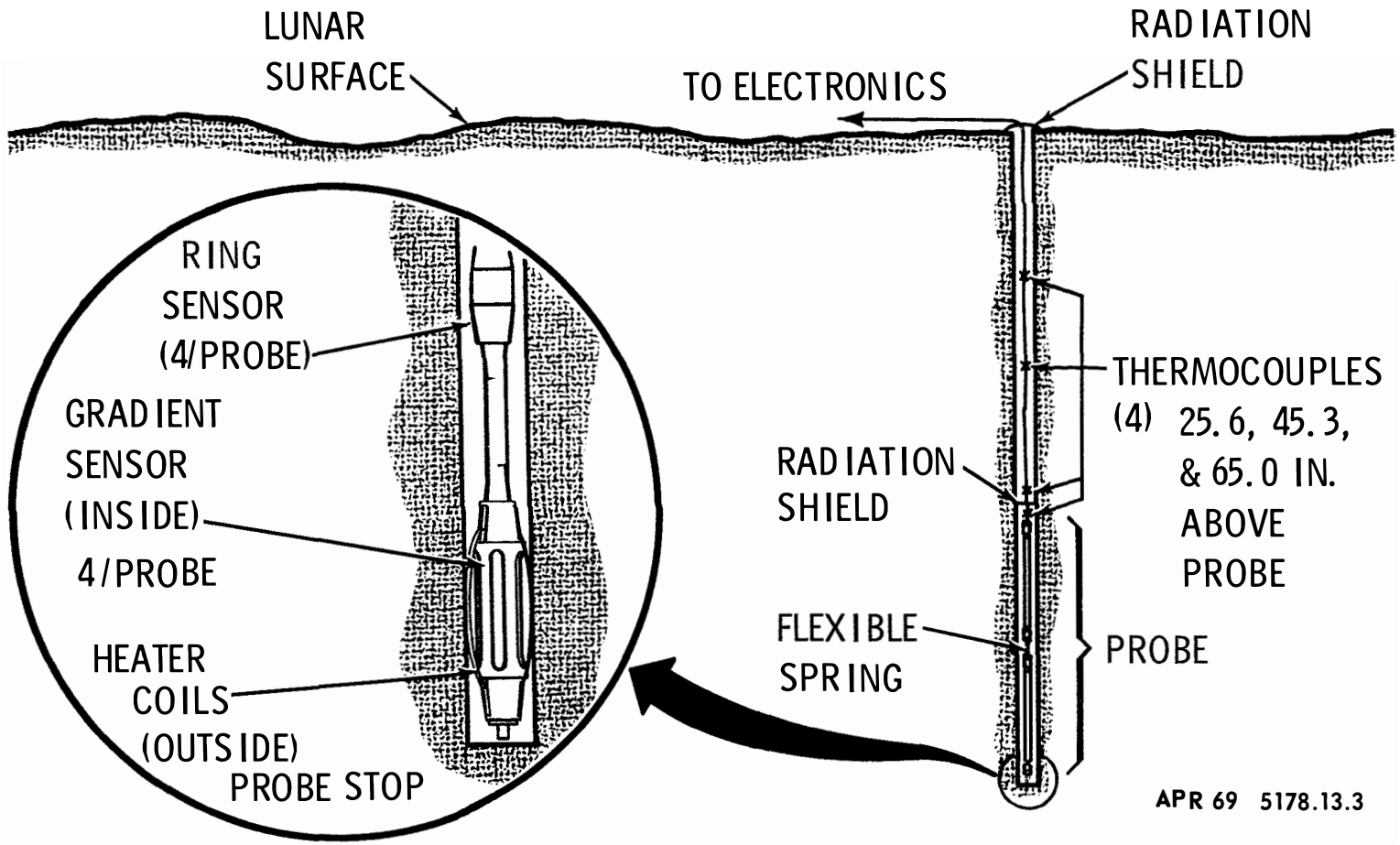

HFE FUNCTIONAL DIAGRAM

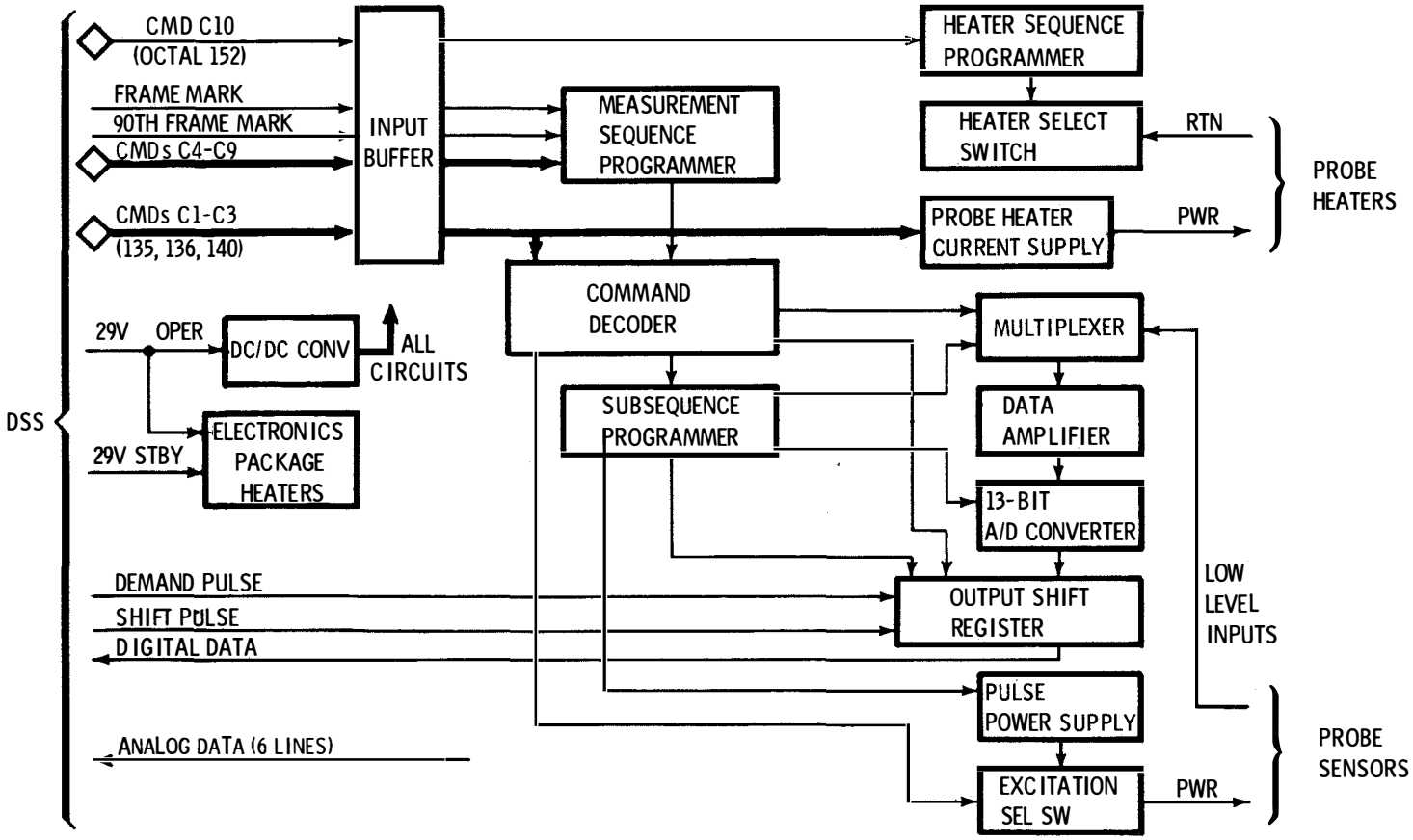

DEC 68 5178.13.4

HFE MODES OF OPERATION

	MODE		
	G, NORMAL GRADIENT (MODE 1)	LK, LOW CONDUCTIVITY (MODE 2)	HK, HIGH CONDUCTIVITY (MODE 3)
MEASUREMENT SEQUENCES	A. FULL (ALL MEAS)	SAME AS GRADIENT	DIFFERENTIAL & AMBIENT TEMP FOR ONE BRIDGE (DEPENDING ON SELECTED HEATER)
	B. PROBE 1 PROBE 2		
	C.* DIFFERENTIAL TEMP (HI EXCITATION) DIFFERENTIAL TEMP (LO EXCITATION) AMBIENT TEMP REF JUNCTION TEMP & CABLE THERMOCOUPLES		
	D. COMBINATIONS OF B & C		
BRIDGE SENSORS	GRADIENT	GRADIENT	RING (OR "REMOTE")
HEATERS	NONE	RING SOURCE	HEAT PULSE

*THESE MODES USED PRIMARILY FOR TESTS

APR 69 5178.13.5

HFE COMMAND SUMMARY

CMD HFE	NUMBERS OCTAL		
C1	135	HFE MODE/G SEL*	INITIALIZED TO THESE CONDITIONS AT POWER TURN-ON
C2	136	HFE MODE/LK SEL	
C3	140	HFE MODE/HK SEL	
C4	141	HFE SEQ/FUL SEL*	
C5	142	HFE SEQ/P1 SEL	
C6	143	HFE SEQ/P2 SEL	
C7	144	HFE LOAD 1	MEASUREMENT SELECT (ENCODED)
C8	145	HFE LOAD 2	
C9	146	HFE LOAD 3	
C10	152	HFE HTR STEPS	

INPUT BUFFER HOLDS COMMANDS FOR EXECUTION AT 90-FRAME MARK

HFE DIGITAL DATA FORMAT

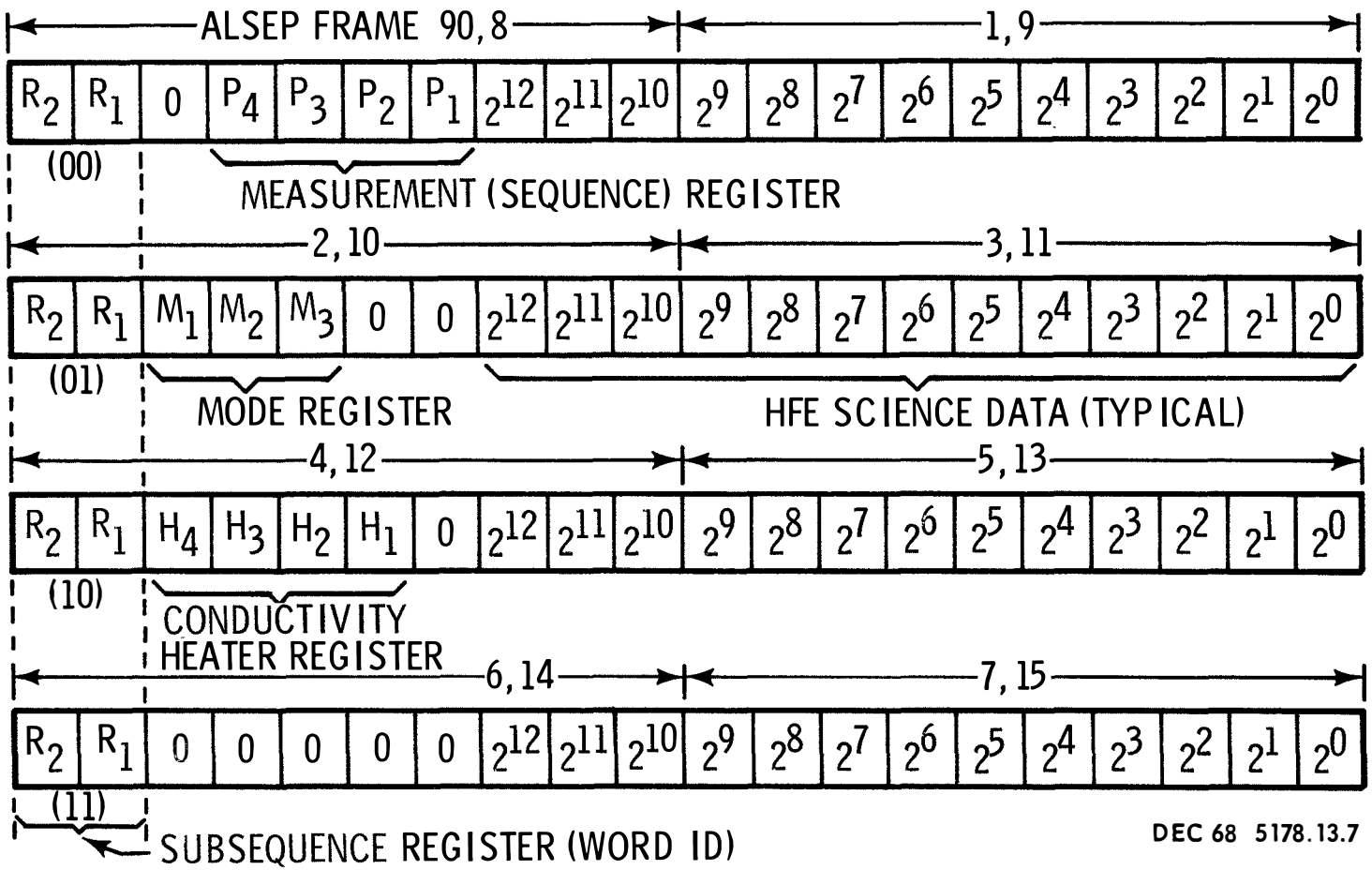

DEC 68 5178.13.7

HFE MODE REGISTER

THE MODE REGISTER IS PART OF THE HFE CMD DECODER AND RESPONDS TO CMDs 135, 136 AND 140. THE STATE OF THIS REGISTER IS READ OUT VIA TM

OCTAL	ABBR	HFE	MODE	TM ($M_1M_2M_3$)
135	MODE/G	MODE 1	NORMAL GRADIENT	100
136	MODE/LK	MODE 2	LOW CONDUCTIVITY	010
140	MODE/HK	MODE 3	HIGH CONDUCTIVITY	001

THE MODE SELECTED BY CMD AFFECTS THE DATA AS FOLLOWS:

MODE/G AND MODE/LK HAVE IDENTICAL TM (FORMATTED BY THE MEASUREMENT SEQUENCE PROGRAMMER AND SUBSEQUENCE PROGRAMMER) BUT IN MODE/LK THE PROBE HEATER CURRENT SUPPLY IS TURNED ON AND HEATERS RESPOND TO CMD 152.

MODE/HK BYPASSES THE MEASUREMENT SEQUENCE PROGRAMMER AND PRODUCES A SPECIAL TM OUTPUT FORMATTED BY THE SUBSEQUENCE PROGRAMMER AND HEATER SEQUENCE PROGRAMMER.

HFE GRADIENT MEASUREMENT OPTIONS

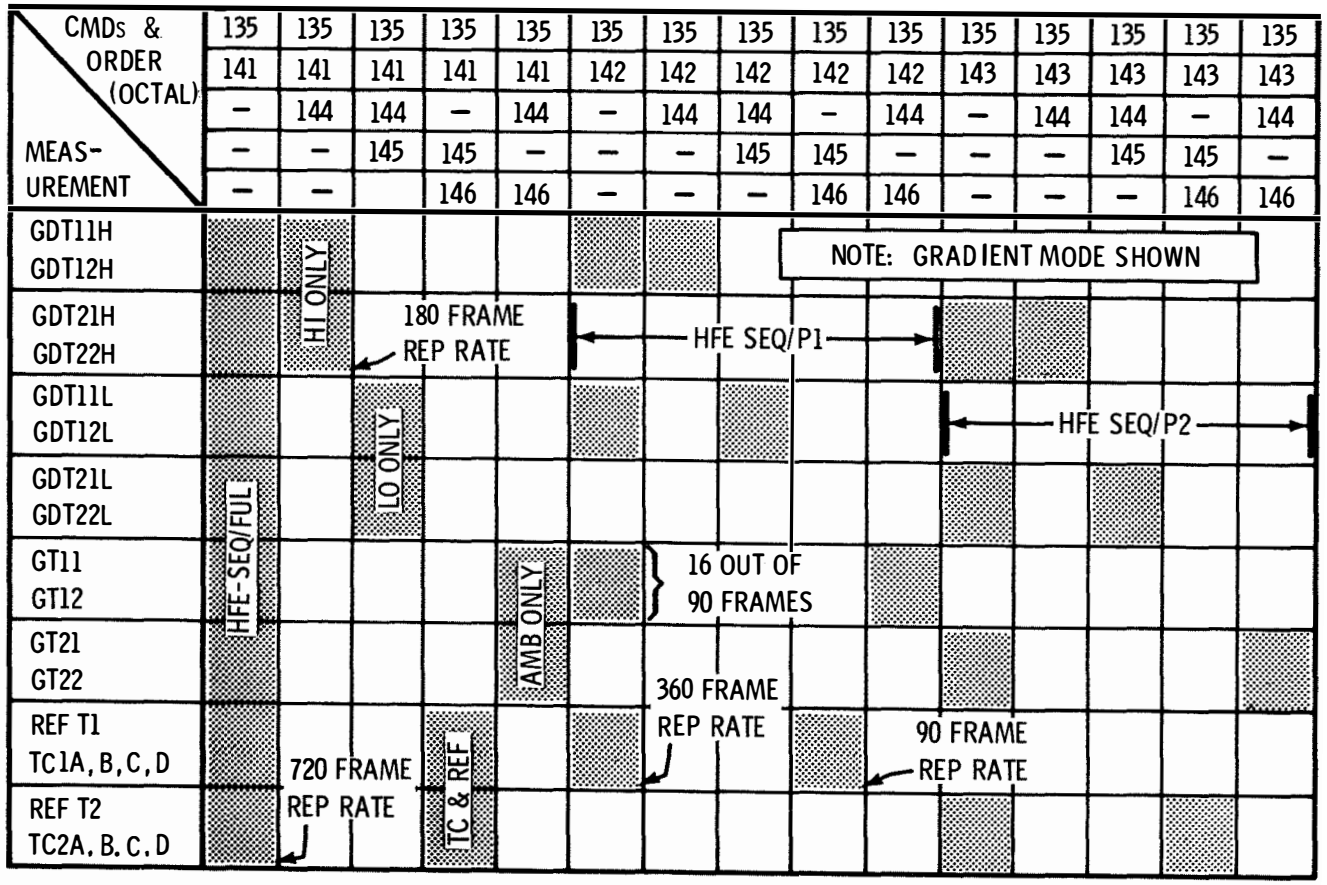

DEC 68 5178.13.9

HFE MEASUREMENT SEQUENCE PROGRAMMER

THE MEASUREMENT SEQUENCE PROGRAMMER (MSP) IS A 16-STATE BINARY COUNTER USING 4 FLIP-FLOPS. ITS OPERATION CAN BE MODIFIED BY CMD TO PERFORM 8-STATE, 4-STATE, AND 2-STATE PROGRAMS. THE FLIP-FLOPS HAVE DUAL FUNCTIONS:

- FORMAT HFE DATA BY CONTROLLING GATES TO THE OUTPUT REGISTER
- SUPPLY MSP STATUS DATA FOR TM (P-BITS)

NOTE THAT EXECUTION OF A MEASUREMENT CMD (141 THROUGH 146) DOES NOT RESET MSP. OPERATION CONTINUES FROM PREVIOUS STATE.

IN DIAGRAM, THE SET (5) AND CLEAR (C) POSITIONS OF THE FLIP-FLOPS CORRESPOND TO ONE AND ZERO IN THE TM.

HFE MSP DIAGRAM

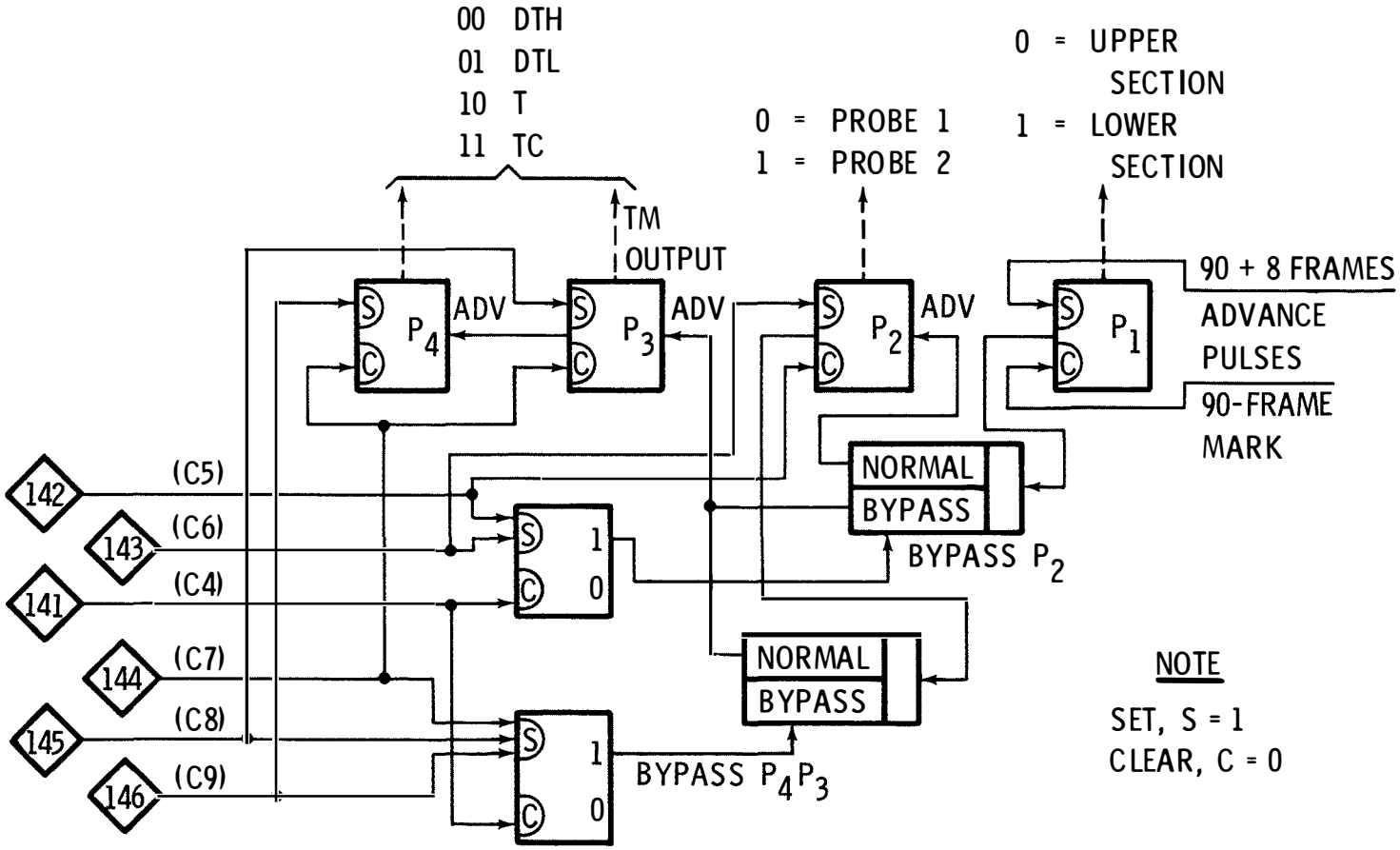

APR 69 5178.13.11

HFE SUBSEQUENCE PROGRAMMER

THE SUBSEQUENCE PROGRAMMER IS A 4-STATE COUNTER HAVING DUAL FUNCTIONS:

- CONTROL GATING OF DATA, WITHIN A SUBSET, TO THE OUTPUT REGISTER: (WHERE THE TYPE OF SUBSET IS CONTROLLED BY THE MSP)
- SUPPLY SUBSEQUENCE REGISTER STATUS DATA FOR TM (R-BITS)

THE STATE OF R_2R_1 CHANGES EVERY OTHER ALSEP FRAME (ONE 10-BIT WORD OF HFE DATA IN EACH ALSEP FRAME) STARTING WITH A RESET AT THE 90-FRAME MARK

THE TRANSITION FROM 11 TO 00 BETWEEN 7 AND 8 MARKS THE 90 + 8 FRAME. THIS ADVANCES P_1 FROM ZERO TO ONE

R_2 R_1	ALSEP FRAME NO	
00	90,1	8,9
01	2,3	10,11
10	4,5	12,13
11	6,7	14,15

R_2R_1 READ OUT AS FIRST TWO BITS IN EVEN NUMBERED ALSEP FRAME

FROM ALSEP FRAME 16 TO 89 THERE IS NO HFE DATA AND REGISTER CHANGES ARE INHIBITED

DEC 68 5178.13.12

HFE TIMING FUNCTIONS

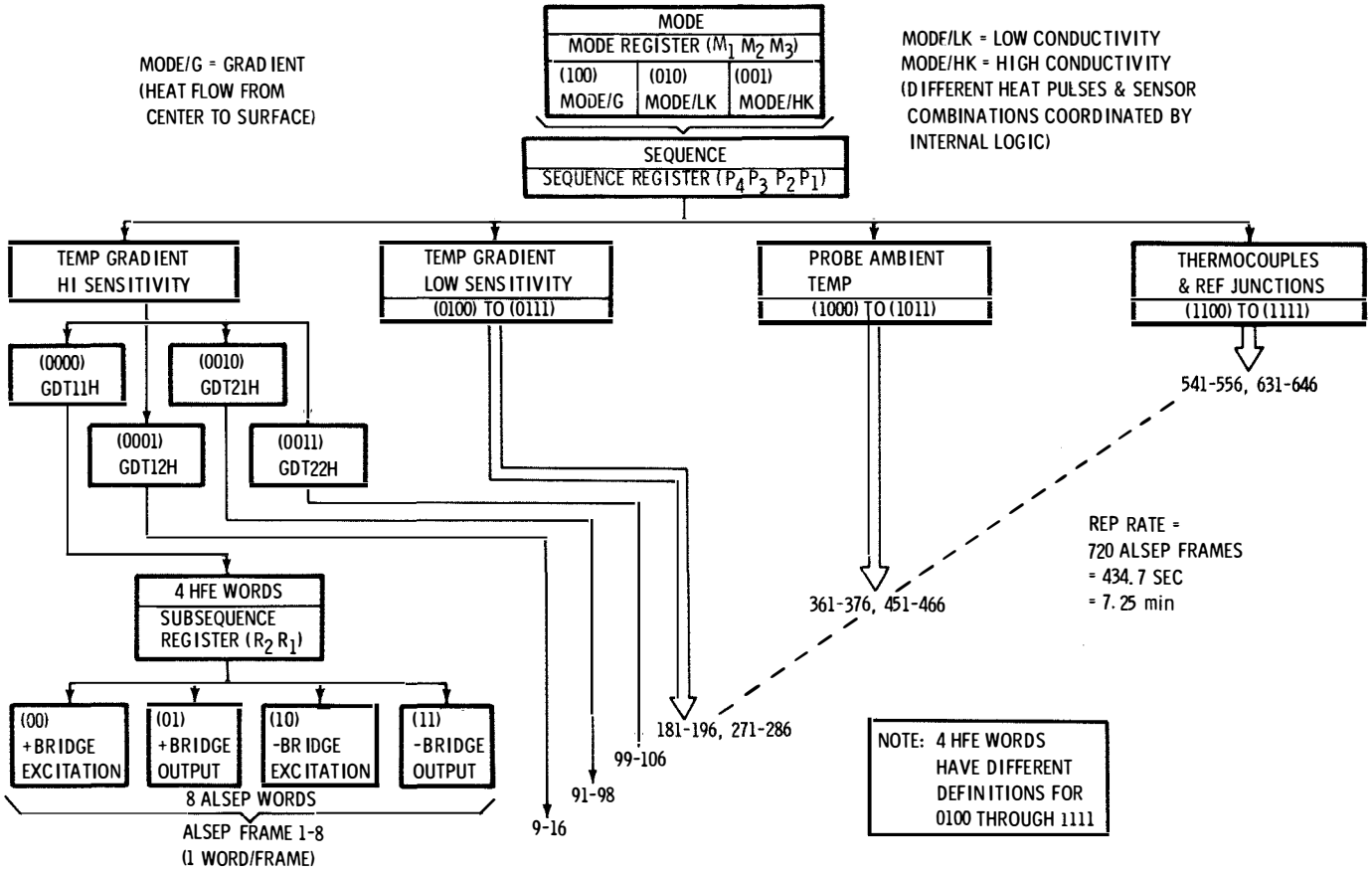

DEC 68 5178.13.13

HFE GRADIENT MEASUREMENT INDEX

SYMBOL	ABBR	P-BITS	DATA SOURCE	PROBE/ BRIDGE	EXCITATION (SENSITIVITY)	(R_2R_1) SUBSET DATA
DH-01	GDT 11H	0000	DIFFER-ENTIAL BRIDGE (GRADIENT SENSORS)	1/UPPER	HIGH VOLTAGE	(00) + BRIDGE EXCITATION
DH-02	GDT 12H	0001		1/LOWER		(01) + BRIDGE OUTPUT
DH-03	GDT 21H	0010		2/UPPER		(10) - BRIDGE EXCITATION
DH-04	GDT 22H	0011		2/LOWER		(11) - BRIDGE OUTPUT
DH-05	GDT 11L	0100		1/UPPER	LOW VOLTAGE	(00) + BRIDGE CURRENT
DH-06	GDT 12L	0101		1/LOWER		(01) + BRIDGE OUTPUT
DH-07	GDT 21L	0110		2/UPPER		(10) - BRIDGE CURRENT
DH-08	GDT 22L	0111		2/LOWER		(11) - BRIDGE OUTPUT
DH-09	GT 11	1000	(RESIS-TANCE)	1/UPPER	HIGH VOLTAGE	(00) + BRIDGE EXCITATION
DH-10	GT 12	1001		1/LOWER		(01) + BRIDGE CURRENT
DH-11	GT 21	1010		2/UPPER		(10) - BRIDGE EXCITATION
DH-12	GT 22	1011		2/LOWER		(11) - BRIDGE CURRENT
DH-13	REF T1	1100	REF JUNCTION BR		HV	SAME AS DH-01 TO DH-04
DH-14 DH-24 DH-34 DH-44	TC1 GROUP	1101	THERMOCOUPLES IN CABLE OF PROBE 1 WRT REF T1			(00) REF T1-TC1 (4) (01) TC1 (4)-TC1 (1) (10) TC1 (4)-TC1 (2) (11) TC1 (4)-TC1 (3) (1) IS AT TOP AND (4) IS AT BOTTOM
DH-15	REF T2	1110	SAME AS DH-13		HV	SAME AS DH-01 TO DH-04
DH-16 DH-26 DH-46 DH-66	TC2 GROUP	1111	THERMOCOUPLES IN CABLE OF PROBE 2 WRT REF T2			(00) REF T2-TC2 (4) (01) TC2 (4)-TC2 (1) (10) TC2 (4)-TC2 (2) (11) TC2 (4)-TC2 (3) (1) IS AT TOP AND (4) IS AT BOTTOM

DEC 68 5178.13.14

HFE HEATER SEQUENCE PROGRAMMER

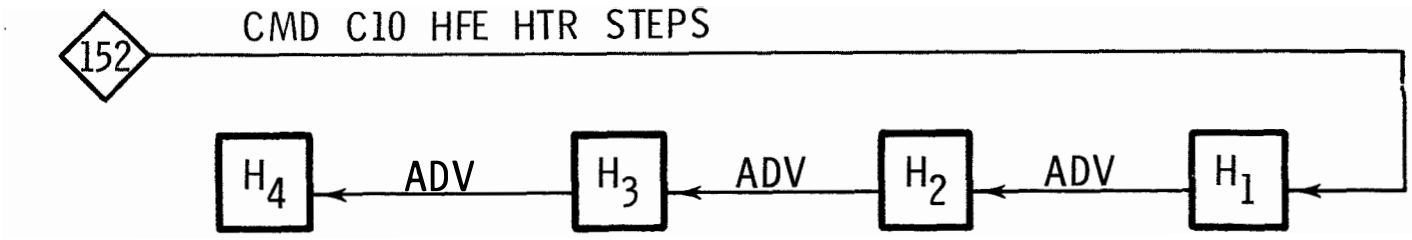

- 16-STATE BINARY COUNTER USING 4 FLIP-FLOPS
- STATUS TRANSMITTED IN TM AS H-BITS (ALL 3 MODES)
- EFFECT ON OPERATION AND DATA:
  - MODE/G – NO EFFECT (CAN BE ADVANCED VIA CMD 152 BUT PROBE HEATER CURRENT SUPPLY IS OFF)
  - MODE/LK – CONTROLS ON/OFF STATUS OF 8 HEATERS (4/PROBE) IN LOW MODE OF PROBE HEATER CURRENT SUPPLY
  - MODE/HK – CONTROLS DATA OUTPUT AND ON/OFF STATUS OF 8 HEATERS IN HIGH MODE OF PROBE HEATER CURRENT SUPPLY
- PROBE HEATER ON/OFF STATUS IN ANALOG TM (ALSEP WORD 33)

DEC 68 5178.13.15

HFE HEATER SELECT CODE

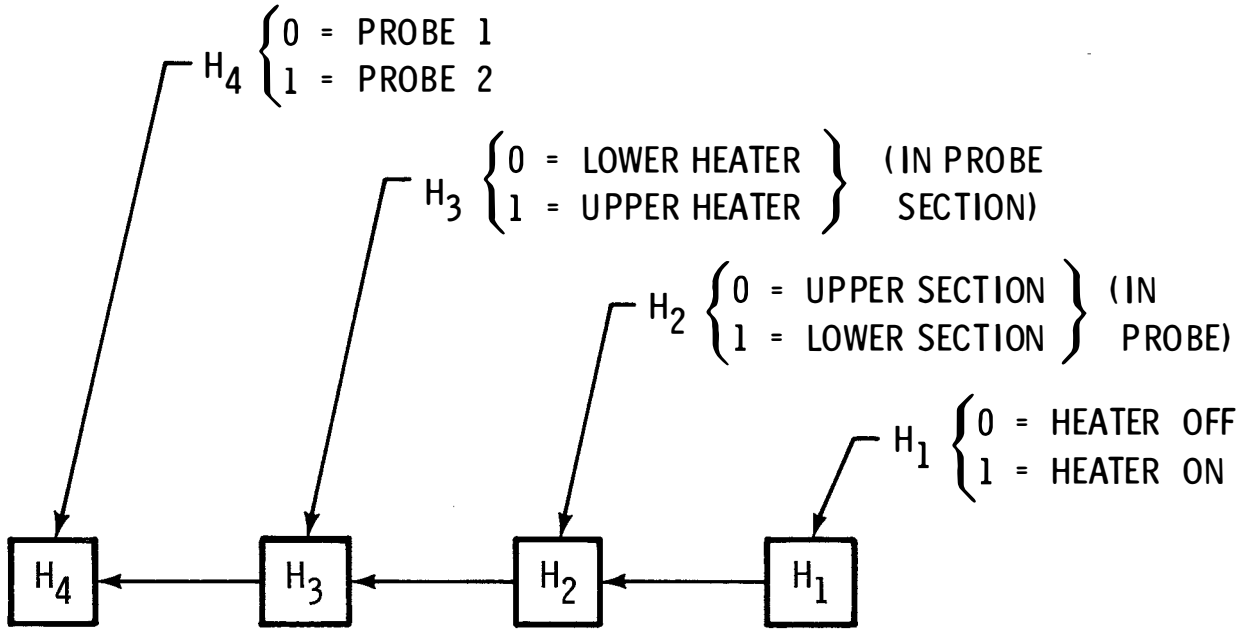

H_3 H_2	HTR NUMBER
00	2
01	4 (BOTTOM)
10	1 (TOP)
11	3

EXAMPLE: WHEN H-BITS = 1011, HEATER H24 IS ON (WHERE H24 INDICATES FOURTH HEATER IN PROBE 2)

NOTE: THIS CODE APPLIES TO HEATER CONTROL IN BOTH MODE/LK AND MODE/HK

DEC 68 5178.13.16

HFE MEASUREMENTS IN MODE/HK

SYMBOL	ABBR	PROBE	BRIDGE	$H_4 H_3 H_2 H_1$	SYMBOL	ABBR	PROBE	BRIDGE	$H_4 H_3 H_2 H_1$
DH-50	RDT 11	1	1	0000	DH-70	RDT 21	2	1	1000
DH-51	RT 11	1	1	0000	DH-71	RT 21	2	1	1000
DH-52	RDT 11	1	1	0001	DH-72	RDT 21	2	1	1001
DH-53	RT 11	1	1	0001	DH-73	RT 21	2	1	1001
DH-60	RDT 12	1	2	0010	DH-80	RDT 22	2	2	1010
DH-61	RT 12	1	2	0010	DH-81	RT 22	2	2	1010
DH-62	RDT 12	1	2	0011	DH-82	RDT 22	2	2	1011
DH-63	RT 12	1	2	0011	DH-83	RT 22	2	2	1011
DH-56	RDT 11	1	1	0100	DH-76	RDT 21	2	1	1100
DH-57	RT 11	1	1	0100	DH-77	RT 21	2	1	1100
DH-58	RDT 11	1	1	0101	DH-78	RDT 21	2	1	1101
DH-59	RT 11	1	1	0101	DH-79	RT 21	2	1	1101
DH-66	RDT 12	1	2	0110	DH-86	RDT 22	2	2	1110
DH-67	RT 12	1	2	0110	DH-87	RT 22	2	2	1110
DH-68	RDT 12	1	2	0111	DH-88	RDT 22	2	2	1111
DH-69	RT 12	1	2	0111	DH-89	RT 22	2	2	1111

- DATA ALTERNATES BETWEEN DIFFERENCE (BRIDGE) AND AMBIENT (RESISTANCE) MEASUREMENTS FOR THE SET OF RING SENSORS NEAREST THE SELECTED HEATER

ALSEP FRAMES	P_1 (a)	MEAS TYPE (b)	ABBR (c)
90 TO 7	0	DIFFERENCE	RDTNN
8 TO 15	1	AMBIENT	RTNN

- NOTES
  - (a) P-BITS, OTHER THAN P_1, ARE MEANINGLESS IN MODE/HK
  - (b) MEASUREMENT CONTENT:

$R_2 R_1$	DIFFERENCE	AMBIENT
00	+ BRIDGE EXCITATION VOLTS	
01	+ BRIDGE OUTPUT	+ BRIDGE CURRENT
10	- BRIDGE EXCITATION VOLTS	
11	- BRIDGE OUTPUT	- BRIDGE CURRENT

  - (c) NN IDENTIFIES SENSOR (BRIDGE) LOCATION

HFE COMMAND DETAILS

OCTAL CMD NUMBER

135 HFE MODE/G SEL

THIS CMD (C1) IS A 1 STATE CMD. IT PLACES THE HFE IN THE GRADIENT, OR NORMAL, MODE OF OPERATION IN WHICH MEASUREMENTS ARE OBTAINED FROM THE GRADIENT SENSORS AND CABLE THERMOCOUPLES UNDER THE CONTROL OF THE MSP. CMD 135 ALSO TURNS OFF THE PROBE HEATER CURRENT SUPPLY. DIFFERENT MEASUREMENT SEQUENCES IN MODE/G MAY BE SELECTED BY TRANSMITTING SUBSEQUENT CMDs. AT POWER TURN-ON, THE HFE INITIALIZES IN MODE/G. IF THE HFE IS IN MODE/G, TRANSMISSION OF CMD 135 HAS NO EFFECT

NOTE THAT THE HFE INPUT BUFFER HOLDS CMDs FOR EXECUTION AT THE 90-FRAME MARK; THUS, SEQUENTIAL CMDs MUST BE TRANSMITTED AT LEAST 54 SEC APART

136 HFE MODE/LK SEL

THIS CMD (C2) IS A 1-STATE CMD. IT PLACES THE HFE IN THE LOW CONDUCTIVITY, OR RING SOURCE, MODE OF OPERATION IN WHICH MEASUREMENTS, AND SEQUENCES, ARE IDENTICAL TO MODE/G. IT ALSO TURNS ON THE PROBE HEATER CURRENT SUPPLY IN THE LOW (RING SOURCE) MODE ALLOWING HEATERS TO BE ACTIVATED BY CMD 152. IF THE HFE IS IN MODE/LK, TRANSMISSION OF CMD 136 HAS NO EFFECT

140 HFE MODE/HK SEL

THIS CMD (C3) IS A 1-STATE CMD. IT PLACES THE HFE IN THE HIGH CONDUCTIVITY, OR HEAT PULSE, MODE OF OPERATION IN WHICH MEASUREMENTS ARE OBTAINED FROM THE RING (OR REMOTE) SENSORS UNDER THE CONTROL OF THE HEATER SEQUENCE PROGRAMMER. NOTE THAT CMD 144 (C7) MUST ALSO BE TRANSMITTED BEFORE VALID DATA WILL BE OBTAINED IN MODE/HK. EITHER CMD MAY BE TRANSMITTED FIRST. CMD 140 ALSO TURNS ON THE PROBE HEATER CURRENT SUPPLY IN THE HIGH, OR HEAT PULSE, MODE ALLOWING HEATERS TO BE ACTIVATED BY CMD 152. IF THE HFE IS IN MODE/HK, TRANSMISSION OF CMD 140 HAS NO EFFECT.

141 HFE SEQ/FUL SEL

THIS CMD (C4) IS A 1-STATE CMD IT CANCELS THE EFFECT OF CMDs 142 THROUGH 146 CAUSING THE MSP TO PERFORM ITS FULL 16-STATE CYCLE OF OPERATION IN MODE/G OR MODE/LK. IF TRANSMITTED DURING MODE/HK OPERATION, THIS CMD WILL CAUSE INVALID OPERATION UNTIL CMD 144 IS EXECUTED. AT POWER TURN-ON, THE HFE INITIALIZES IN SEQ/FUL. IF THE HFE IS IN MODE/G OR MODE/LK AND IN SEQ/FUL, TRANSMISSION OF CMD 141 HAS NO EFFECT.

142 HFE SEQ/P1 SEL

THIS CMD (C5) IS A 1-STATE CMD AND ALTERNATES WITH CMD 143 TO SELECT ONLY ONE PROBE FOR MEASUREMENT. IN MODE/HK THIS CMD IS MEANINGLESS. IN MODE/G AND MODE/LK IT CAUSES THE MSP TO LOCK FLIP-FLOP P_2 IN THE CLEAR STATE AND BYPASS P_2. THUS THE MSP ACTS AS AN 8-STATE COUNTER IF CMD 141 WAS PREVIOUSLY EXECUTED, OR AS A 2-STATE COUNTER IF CMD 144, 145 OR 146 WAS PREVIOUSLY EXECUTED SEQ/P1 IS CLEARED BY SUBSEQUENT EXECUTION OF CMD 141

143 HFE SEQ/P2 SEL

THIS CMD (C6) IS A 1-STATE CMD AND ALTERNATES WITH CMD 142 TO SELECT ONLY ONE PROBE FOR MEASUREMENT. IT HAS THE SAME CHARACTERISTICS AS CMD 142 EXCEPT THAT FLIP-FLOP P_2 IS LOCKED IN THE SET STATE.

144 HFE LOAD 1

THIS CMD (C7) IS A 1-STATE CMD AND IS USED ALONE OR IN COMBINATION WITH CMD 145 OR 146 TO POSITION AND LOCK TWO FLIP-FLOPS (P_4 P_3) OF THE MSP. CMD 144 PLACES P_4P_3 IN THE CLEAR POSITION (00) AND BYPASSES THOSE STEPS. THE MSP THEN ACTS AS A 4-STATE COUNTER IF CMD 141 WAS PREVIOUSLY EXECUTED AND AS A 2-STATE COUNTER IF CMD 142 OR 143 WAS PREVIOUSLY EXECUTED. THIS APPLIES TO MODE/G AND MODE/LK. IN MODE/HK CMD 144 MUST BE EXECUTED TO OBTAIN VALID DATA. CMDs 145 OR 146 MAY BE USED IN MODE/G OR MODE/LK, FOLLOWING CMD 144, TO LOCK P_4 P_3 IN THE 10 OR 01 STATE RESPECTIVELY. THE EFFECT OF CMD 144 IS CLEARED BY SUBSEQUENT EXECUTION OF CMD 141. NOTE: WHEN IN MODE/G OR MODE/LK 00 STATE PROVIDES HIGH EXCITATION DIFFERENTIAL TEMPERATURE DATA ONLY.

145 HFE LOAD 2

THIS CMD (C8) IS A 1-STATE CMD AND IS USED IN COMBINATION WITH EITHER CMD 144 (PRECEDING 145) OR CMD 146 (PRECEDING OR FOLLOWING 145) TO POSITION AND LOCK P_4 P_3 (SEE CMD 144). CMD 145 POSITIONS FLIP-FLOP P_3 IN THE SET STATE. THEREFORE, 144-145 YIELDS 01 (LOW EXCITATION DIFFERENTIAL TEMPERATURE DATA ONLY) WHILE 145-146 YIELDS 11 (CABLE THERMOCOUPLE DATA ONLY). EXECUTION OF THIS CMD IN MODE/HK CAUSES INVALID DATA UNTIL CMD 144 IS EXECUTED. THE EFFECT OF CMD 145 IS CLEARED BY SUBSEQUENT EXECUTION OF CMD 141.

146 HFE LOAD 3

THIS CMD (C9) IS A 1-STATE CMD OPERATING ESSENTIALLY THE SAME AS CMD 145 EXCEPT THAT IT POSITIONS FLIP-FLOP P_4 IN THE SET STATE. WHEN PRECEDED BY CMD 144 IT YIELDS 10 FOR P_4 P_3 (AMBIENT TEMPERATURE DATA ONLY). EXECUTION OF THIS CMD IN MODE/HK CAUSES INVALID DATA UNTIL CMD 144 IS EXECUTED.

152 HFE HTR STEPS

THIS CMD (C10) IS A 16-STATE CMD WHICH ADVANCES THE HEATER EXCITATION PROGRAMMER (H_4 H_3 H_2 H_1) EACH TIME THE CMD IS EXECUTED. IN MODE/G THE PROGRAMMER ADVANCES BUTH THERE IS NO OTHER EFFECT SINCE THE PROBE HEATER CURRENT SUPPLY IS OFF. IN MODE/LK THE EXECUTION OF CMD 152 ALTERNATES THE HEATER STATUS BETWEEN ON AND OFF, SIMULTANEOUSLY STEPPING THROUGH THE 8 HEATERS (CURRENT SUPPLY IS ON FULL TIME AND HEATER ELEMENTS ARE SWITCHED IN AND OUT OF CIRCUIT). IN MODE/HK THE HEATER EXCITATION PROGRAMMER (ADVANCED BY CMD 152) ALSO SELECTS THE DATA TO BE SAMPLED.

HFE ANALOG DATA

AH-01	HFE +5V SUPPLY	EACH SAMPLED ONCE EVERY 54 SEC ALSEP SEQUENCE
AH-02	HFE -5V SUPPLY	
AH-03	HFE +15V SUPPLY	
AH-04	HFE -15V SUPPLY	
AH-05	(DELETED)	
AH-06	HFE HTR/LK ON/OFF	
AH-07	HFE HTR/HK ON/OFF	

HFE THERMAL CONTROL

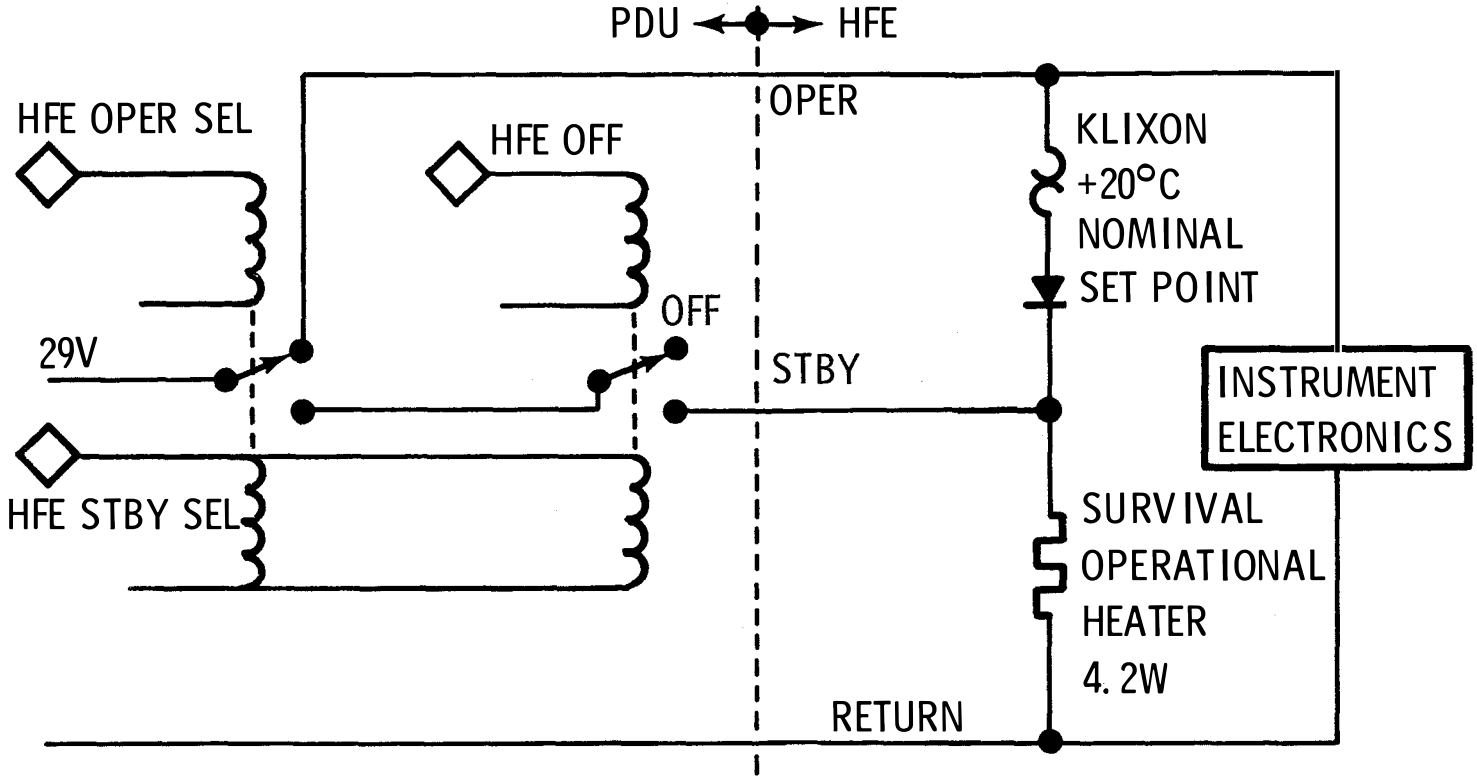

NOTE: ADDITIONAL THERMOSTAT TURNS A PORTION OF INSTRUMENT ELECTRONICS ON/OFF BETWEEN MEASUREMENTS IF TEMP IS LOW/HIGH

APR 69 5178.13.20

HFE POWER PROFILE

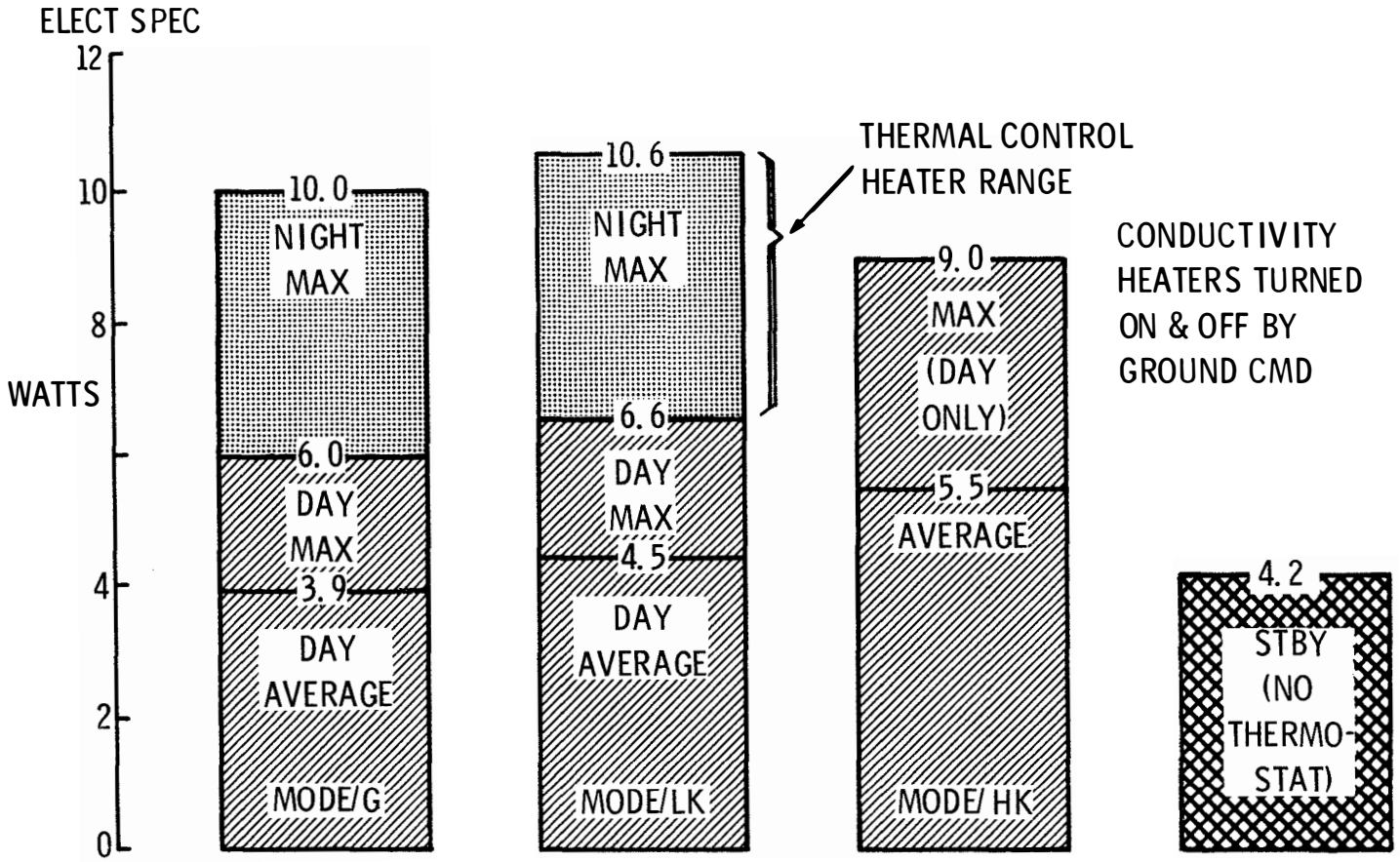

APR 69 5178.13.21

HFE TIE-DOWN

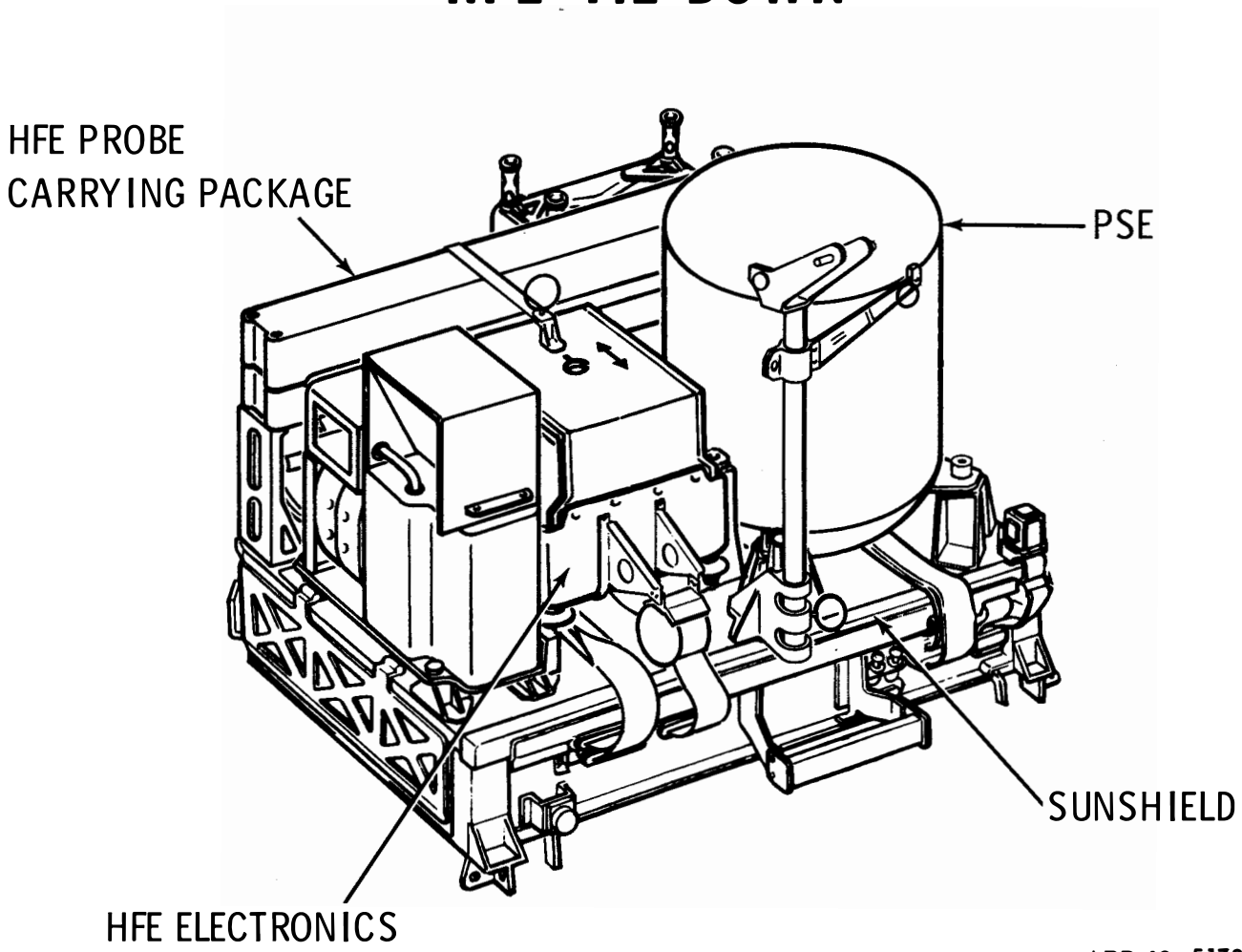

APR 69 5178.13.22

HFE EMPLACEMENT CRITERIA

	PARAMETER	REQUIREMENT	PRIORITY	INDICATOR	COMMENTS
ELECTRONICS PACKAGE	DISTANCE FROM SUBPACKAGE 1	29 ± 1 ft (30 ft CABLE)	2	PACED OFF	TO OBTAIN PROBE SEPARATION FROM RTG*
	DIRECTION FROM SUBPACKAGE 1	AWAY FROM RTG	2	EYEBALL	GREATER THAN 80° FROM RTG
	LEVEL	±12° OF VERTICAL	2	EYEBALL	INTERACTS WITH ALIGNMENT
	ALIGN WRT SHADOW	±5° OF E-W	2	ARROW** AND SHADOWS	THERMAL REQ FOR SUN SHIELD SHADOWS TO ALIGN WITH PLATE EDGES
PROBES (2)	DISTANCE FROM ELECTRONICS	17 ± 1 ft (20 ft CABLE TO HOLE)	1	PACED OFF (CABLE MARKED FOR DEPTH)	TO OBTAIN 30 ft SEPARATION BETWEEN PROBES (REQUIREMENT)
	DIRECTION FROM ELECTRONICS	AT LEAST 140° APART	1	PAINT LINES***	PROBE AND RTG SEPARATION* AVOID SHADOWS FROM ALL SUBSYSTEMS
	VERTICAL ALIGNMENT	WITHIN ± 15°	2	EYEBALL	OBJECTIVE FOR DRILLING
EXPERIMENT INTERRELATION	*SEPARATION DISTANCE FROM RTG: 40 ft MINIMUM, AVOID MAJOR DISTURBANCES (TRAMPLING, ETC.) AND SHADOWS IN 17 ft CIRCLE AROUND PROBE.				
SPECIAL REQUIREMENTS	**ARROW NOMINALLY POINTS EAST-WEST ***PAINT LINES GIVE 120° DIRECTIONS CENTERED ON N-S AXIS BUT ALLOW ESTIMATION OF OTHER DIRECTIONS.				

APR 69 5178.13.23

HFE ALIGNMENT MARKINGS

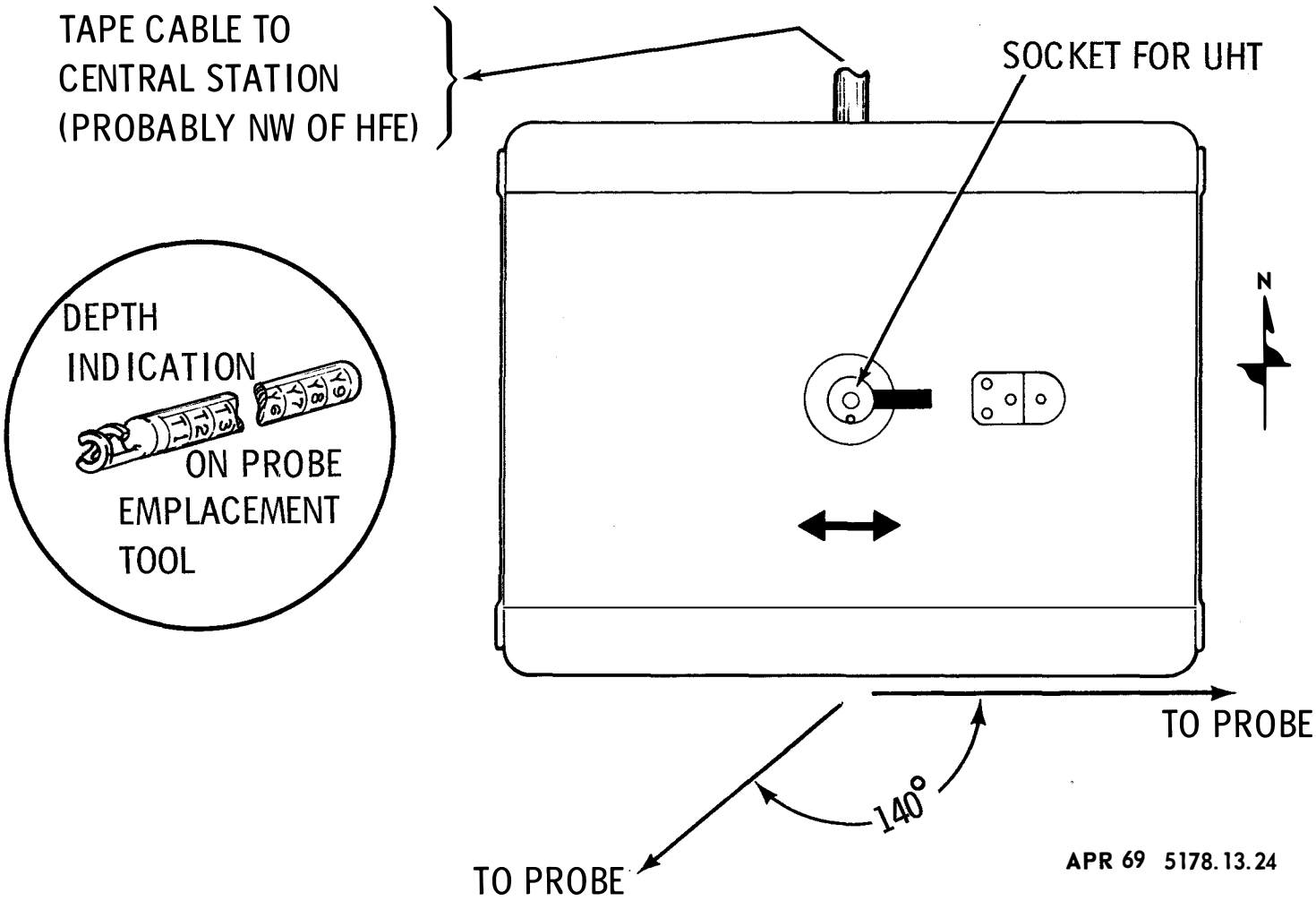

APR 69 5178.13.24

APOLLO LUNAR SURFACE DRILL

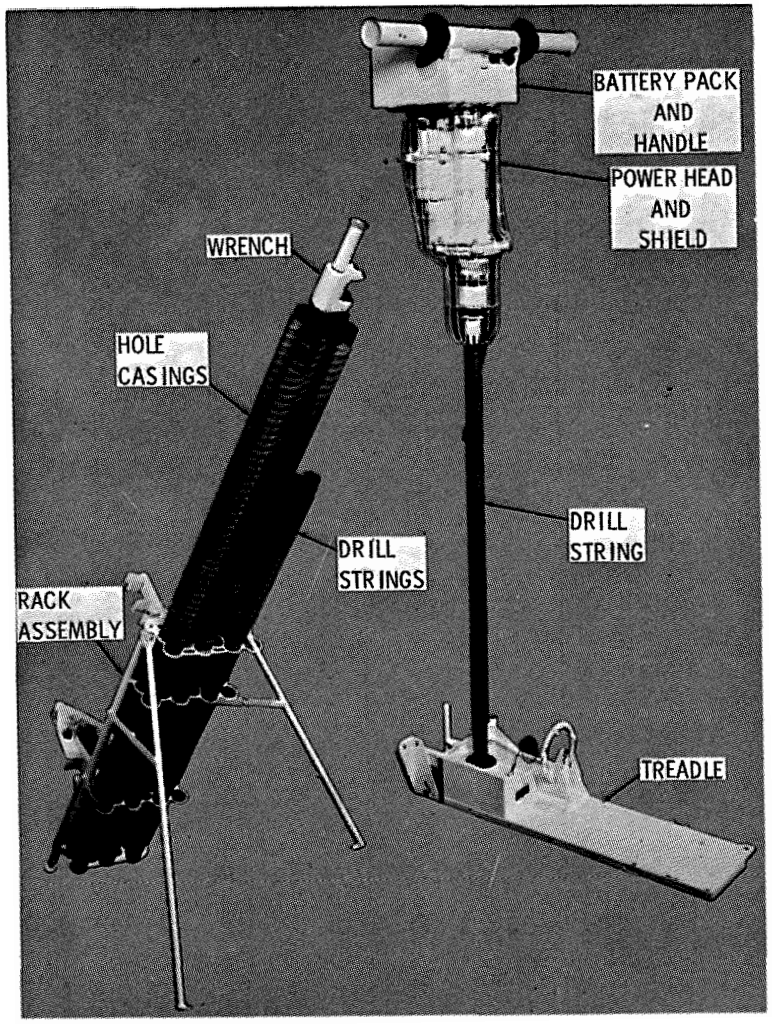

JAN 69 5178.13.25

APOLLO LUNAR SURFACE DRILL

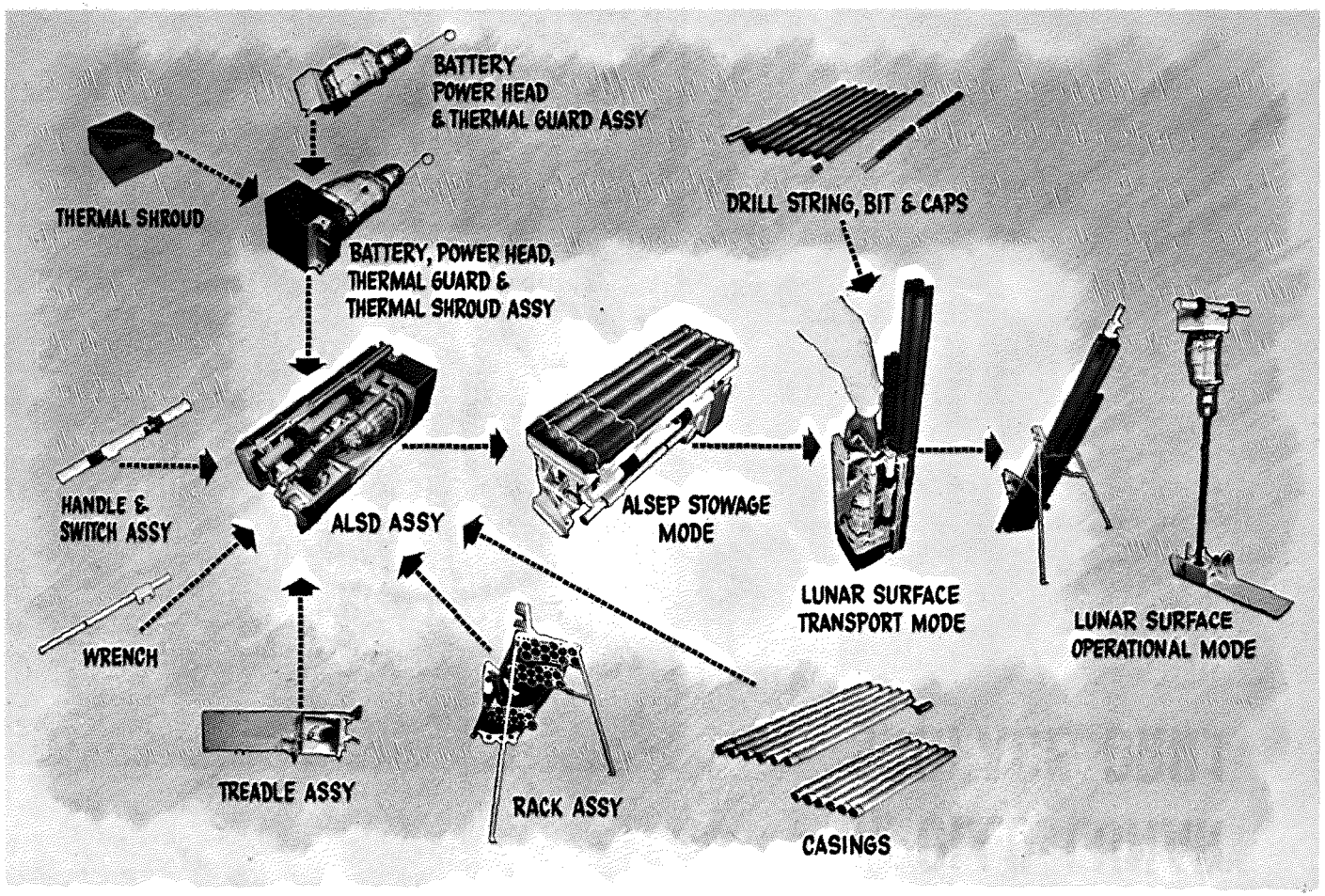

JAN 69 5178.13.26

CHARGED-PARTICLE LUNAR ENVIRONMENT EXPERIMENT SUBSYSTEM

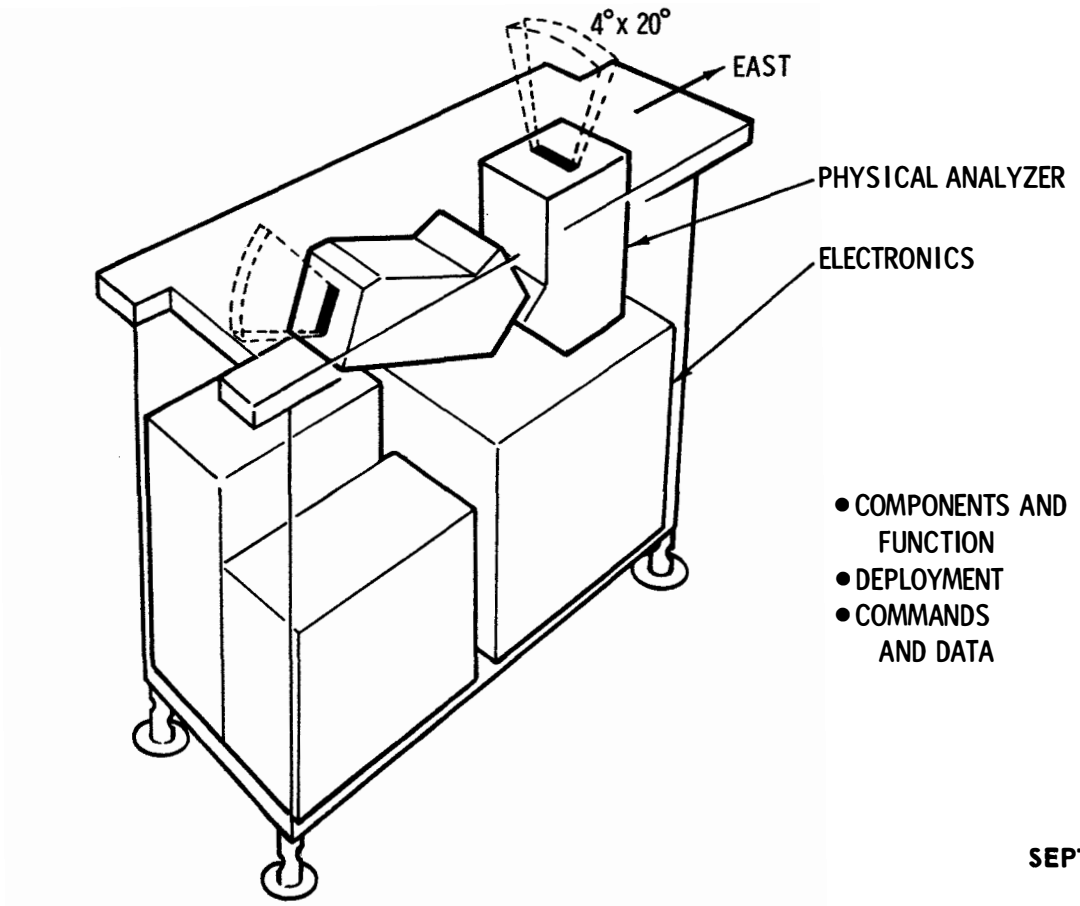

- COMPONENTS AND FUNCTION
- DEPLOYMENT
- COMMANDS AND DATA

SEPT 68 5178.14.1

CPLEE PHYSICAL ANALYZER

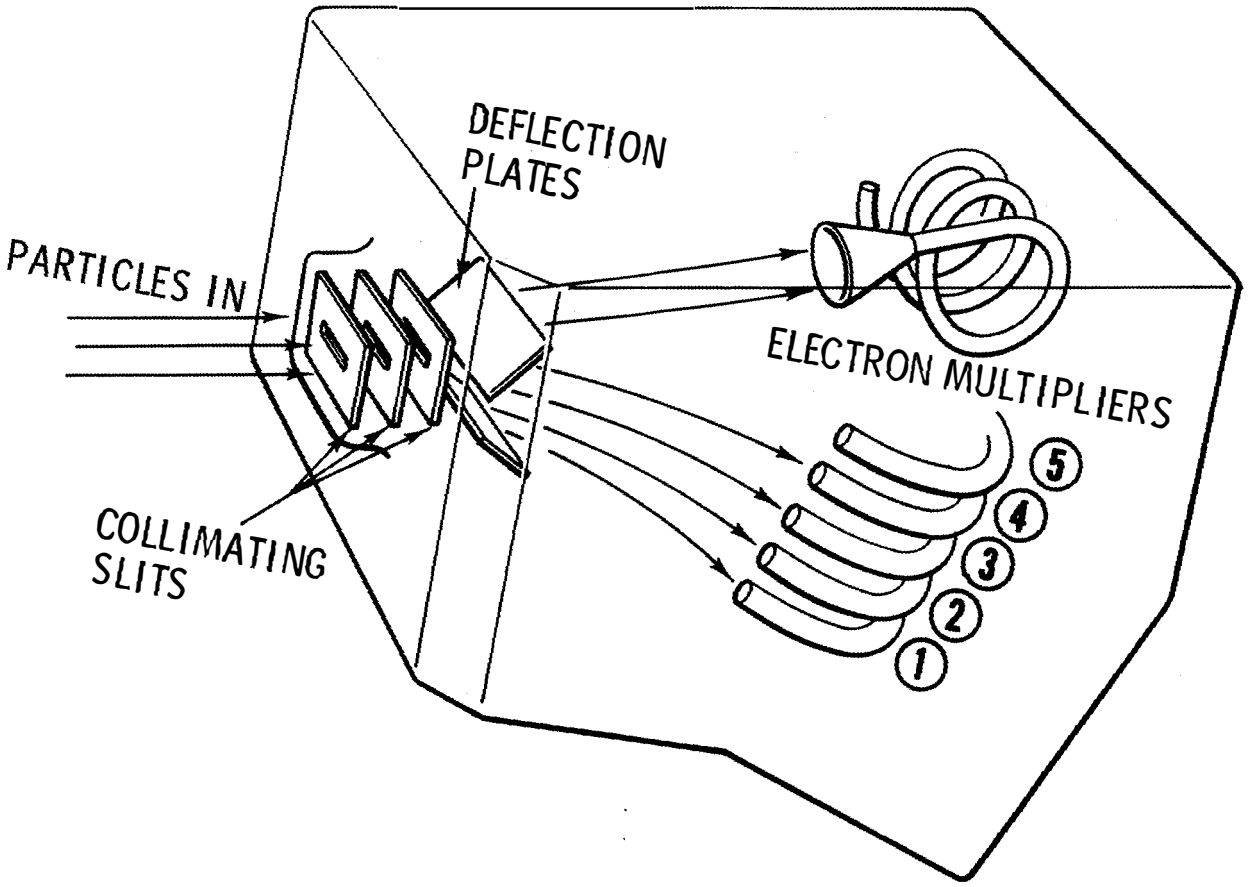

NOV 67 5178.14.2

CHANNELTRON® ELECTRON MULTIPLIERS

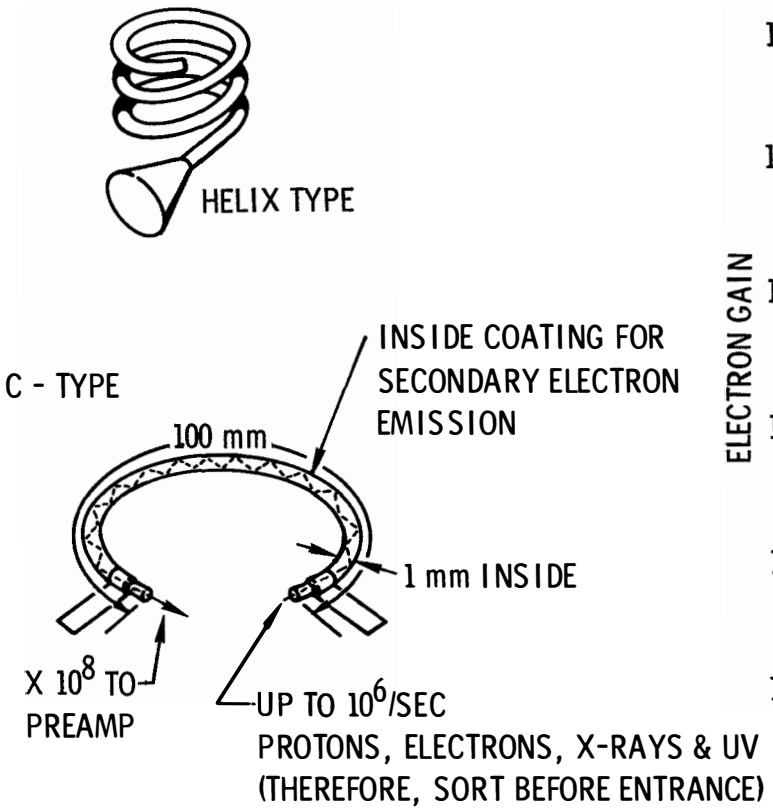

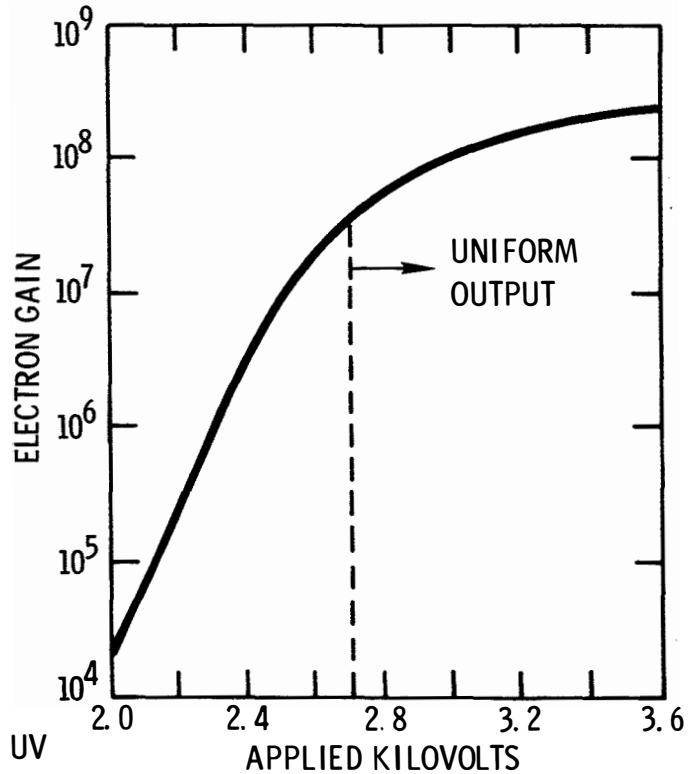

NOV 67 5178.14.3

CPLEE FUNCTIONAL DIAGRAM

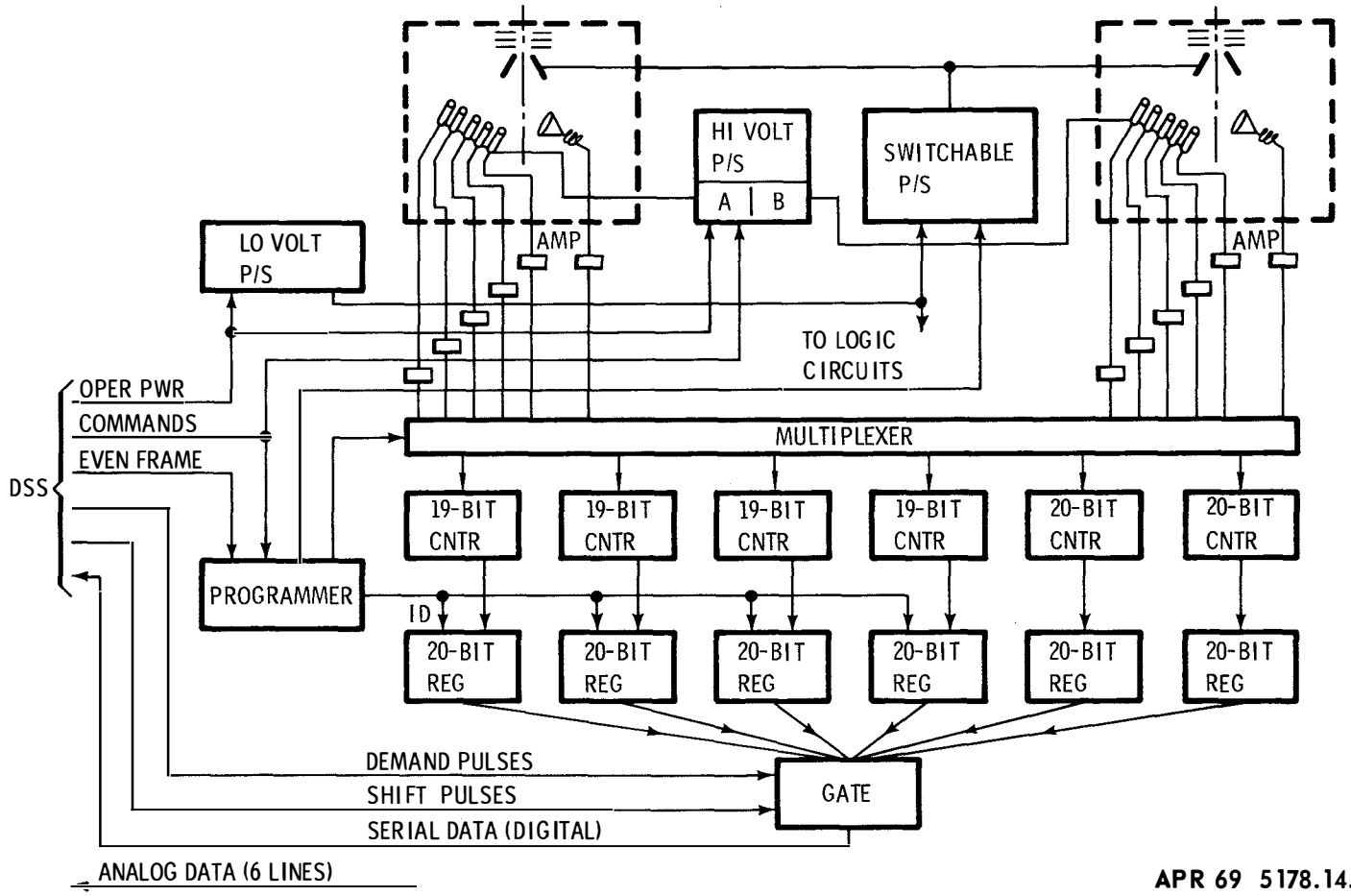

APR 69 5178.14.4

CPLEE THERMAL CONTROL

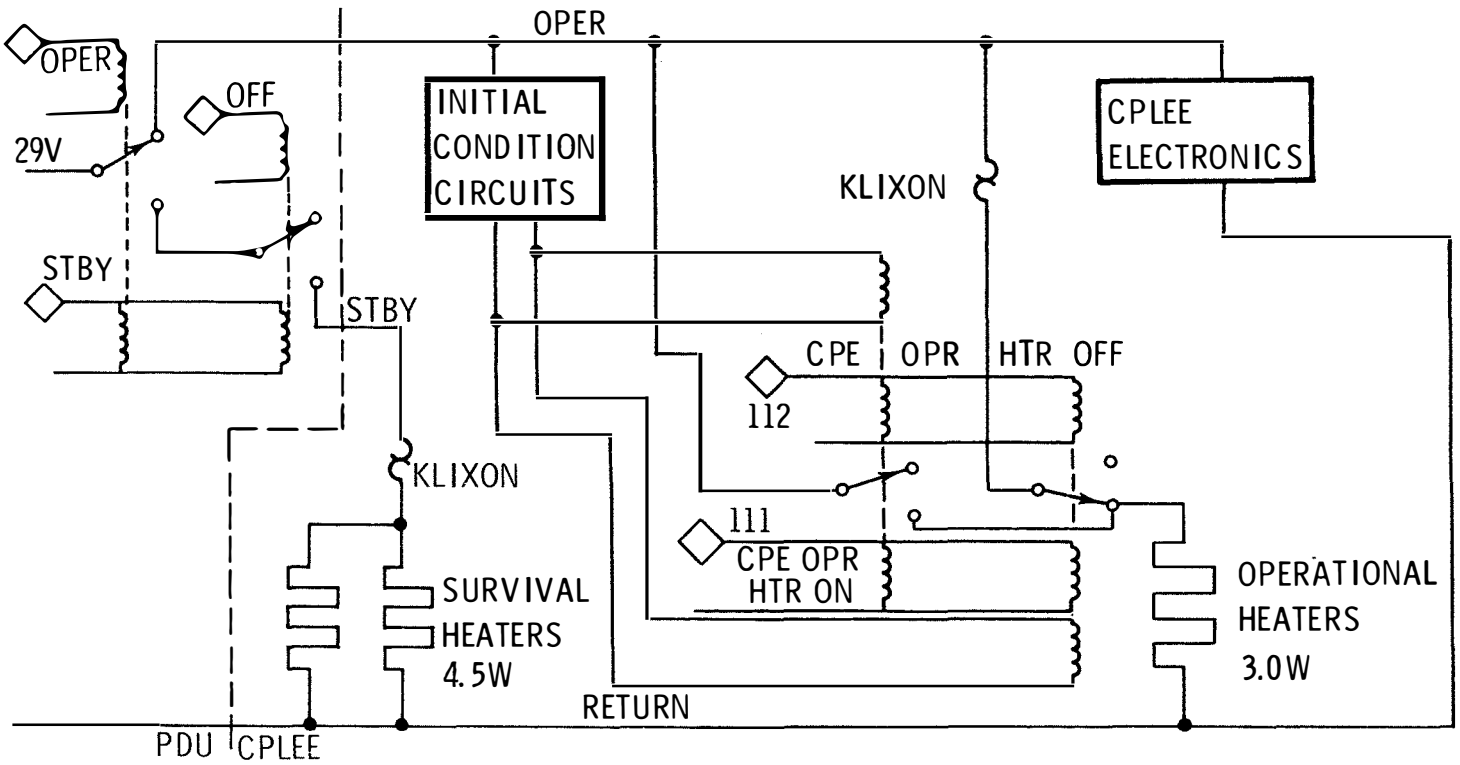

APR 69 5178.14.5

CPLEE TIMING SEQUENCE

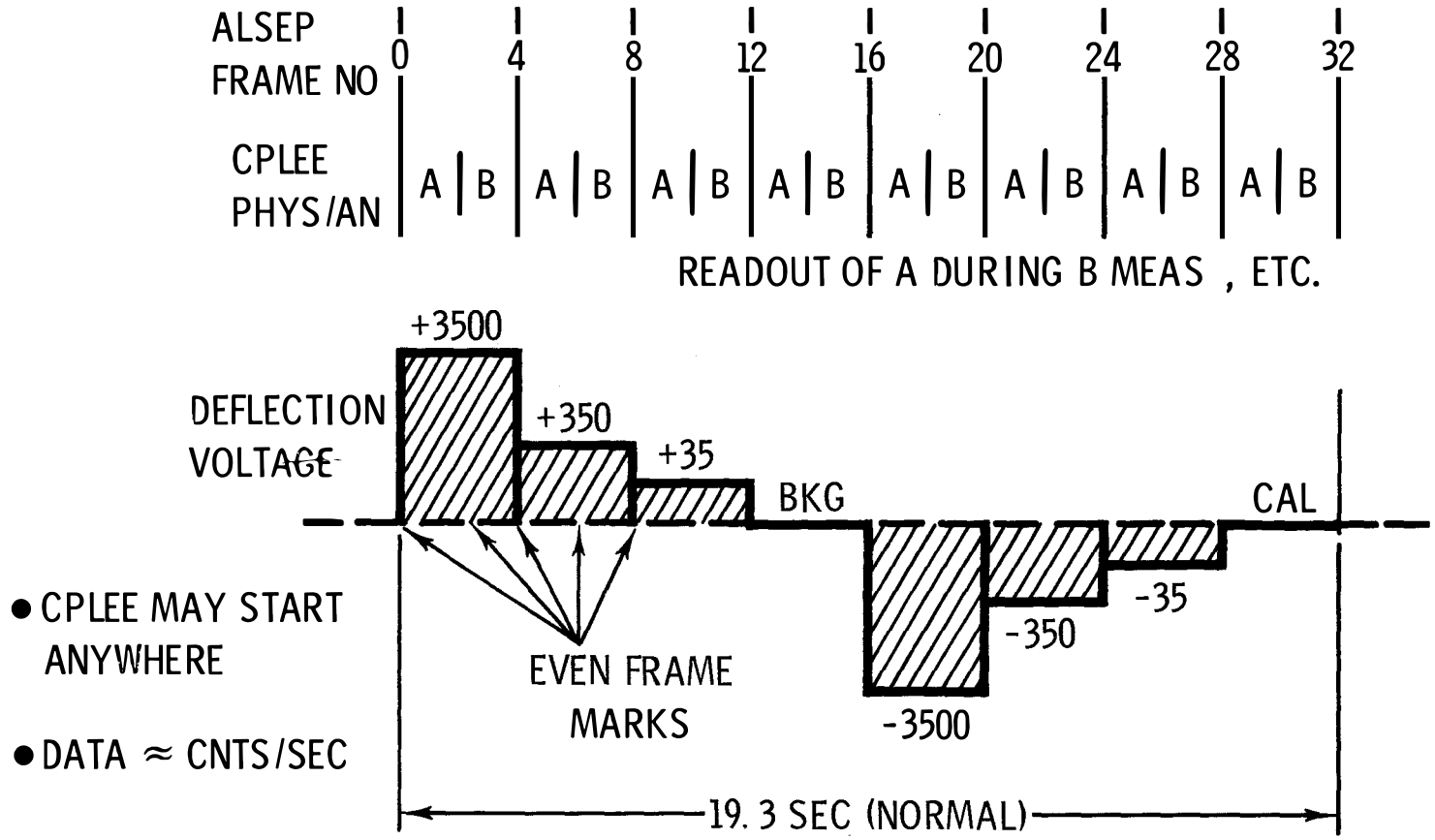

- CPLEE MAY START ANYWHERE
- DATA ≈ CNTS/SEC

NOV 68 5178.14.6

CPLEE POWER PROFILE

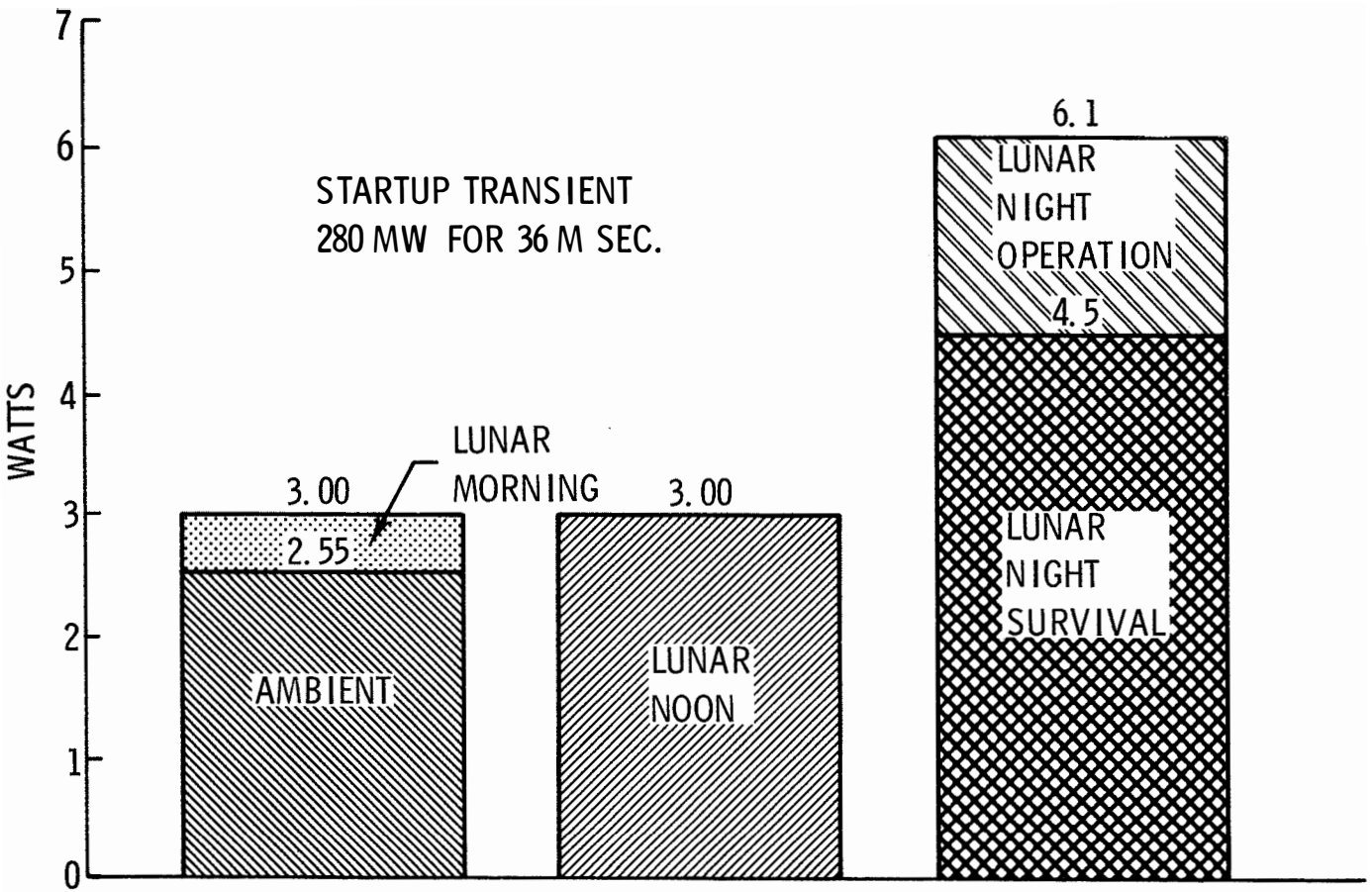

APR 69 5178.14.7

CPLEE ENERGY RANGES

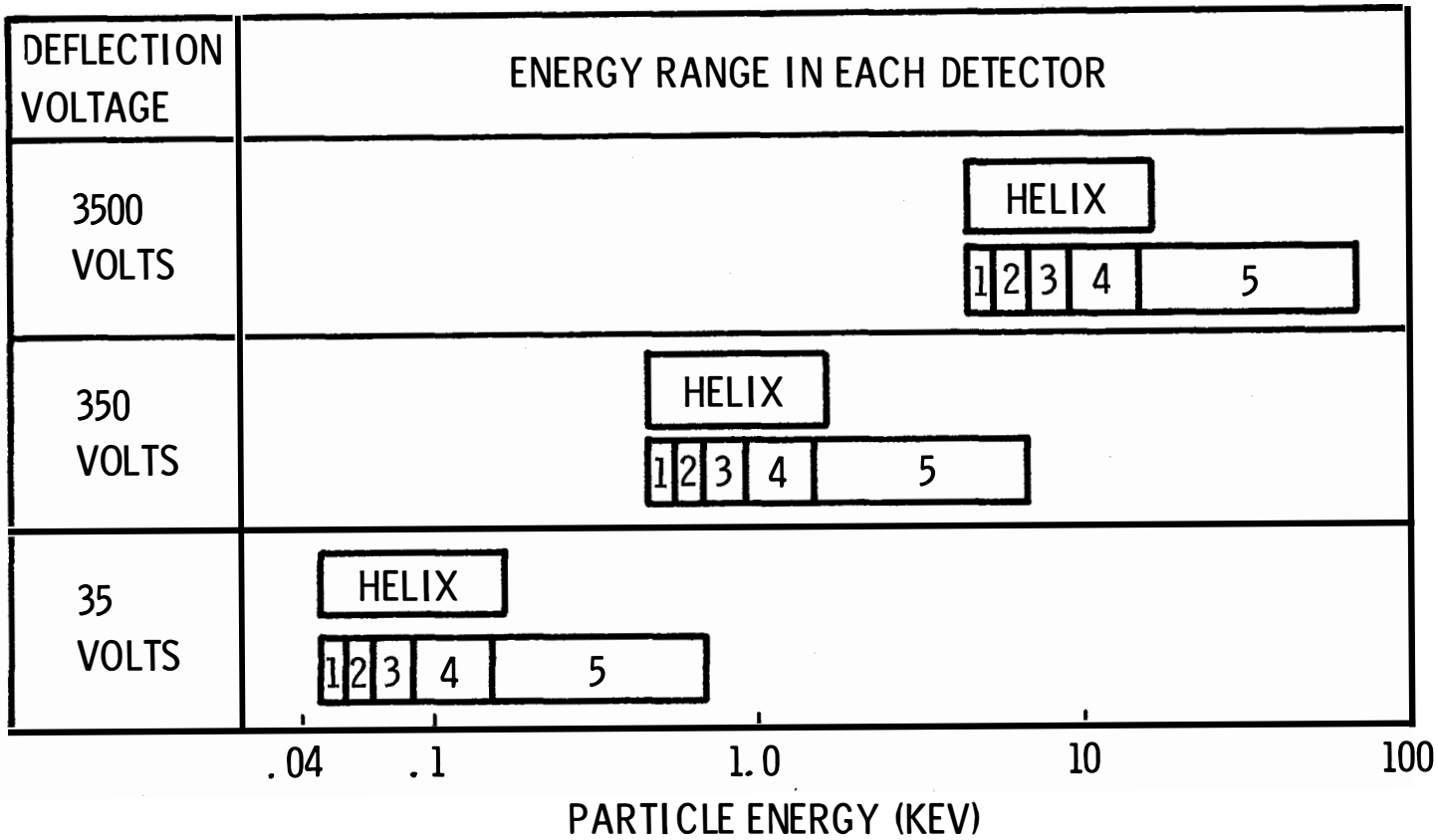

SEPT 68 5178.14.8

CPLEE PERFORMANCE CHECKS

TECHNIQUE	CNT/SEC
BETA SOURCE IN DUST COVER FOR COMPLETE TEST DURING INITIAL OPERATION	0 TO 2000 (DEPENDING ON CHANNEL)
TEST OSCILLATOR INPUT TO ALL PREAMPS ONCE DURING EACH OPERATING CYCLE	≈350,000 Hz (FILLS 19TH BIT OF REGISTER)

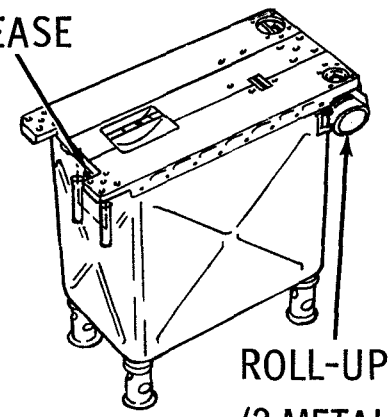

APR 69 5178.14.9

CPLEE TIE-DOWN

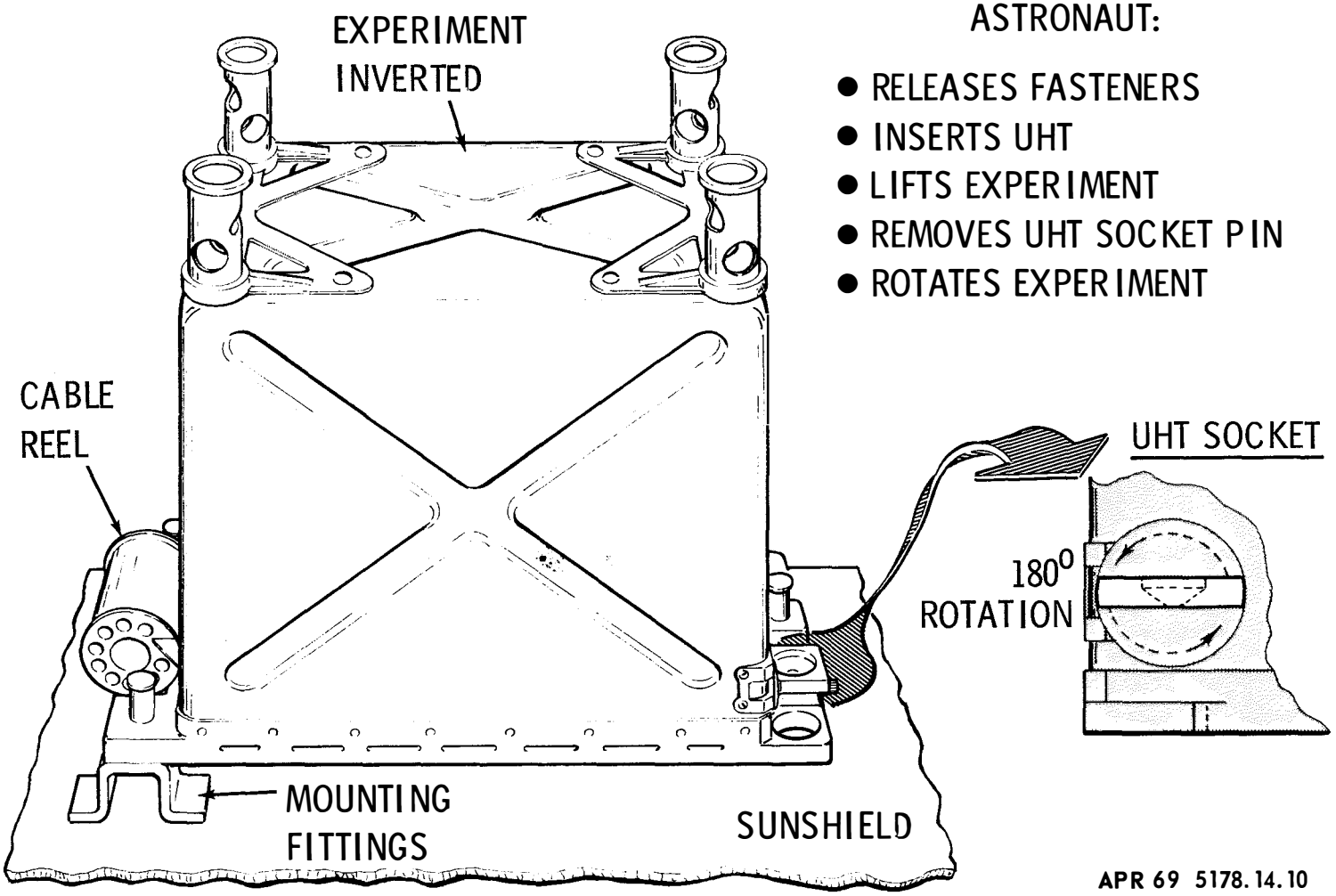

ASTRONAUT:

- RELEASES FASTENERS
- INSERTS UHT
- LIFTS EXPERIMENT
- REMOVES UHT SOCKET PIN
- ROTATES EXPERIMENT

APR 69 5178.14.10

CPLEE EMPLACEMENT CRITERIA

PARAMETER	REQUIREMENT	PRIORITY	INDICATOR	COMMENTS
DISTANCE FROM SUBPACKAGE 1	10 ± 1 FT (11 FT CABLE)	1	PACED OFF	CRITICAL SEPARATION IS FROM RTG AND SUB-PACKAGE 1
DIRECTION FROM SUBPACKAGE 1	AT LEAST 60° FROM RTG AND 30° FROM N-S LINE OF SUB-PACKAGE 1	1	EYEBALL	AT LEAST 14 FT FROM RTG AND PREFERABLY 20 FT* AVOID FIELD OF VIEW OF CENTRAL STATION RADIATOR
SITE SELECTION	APPROX HORIZ	2	EYEBALL	75° (HALF-ANGLE) VERTICAL CONE MUST BE CLEAR EXCEPT FOR ALSEP ANTENNA.
LEVEL, WRT INDICATOR	±2.5° OF HORIZ	1	BUBBLE	INTERACTS WITH ALIGNMENT
ALIGN, WRT SHADOW	± 2° OF E-W	2	ARROW**	THERMAL REQUIREMENT
READOUT OF ALIGNMENT	± 1° OF E-W	1	TOOL & ROSE	SCIENTIFIC REQUIREMENT**
EXPERIMENT INTERRELATION	*CONTAMINATING RADIOACTIVE FIELD AT CPLEE CAUSED BY OTHER SUBSYSTEMS MUST BE LESS THAN 0.1 COUNT/SEC IN ALL CHANNELS.			
SPECIAL REQUIREMENTS	**EXPERIMENT IS BIDIRECTIONAL FOR SCIENTIFIC OUTPUT BUT ARROW POINTS E AND PARTIAL COMPASS ROSE (USING SHADOW OF HANDLING TOOL) COVERS ONLY THE RANGE FOR SUN IN EAST.			

SEPT 68 5178.14.11

CPLEE ALIGNMENT MARKINGS

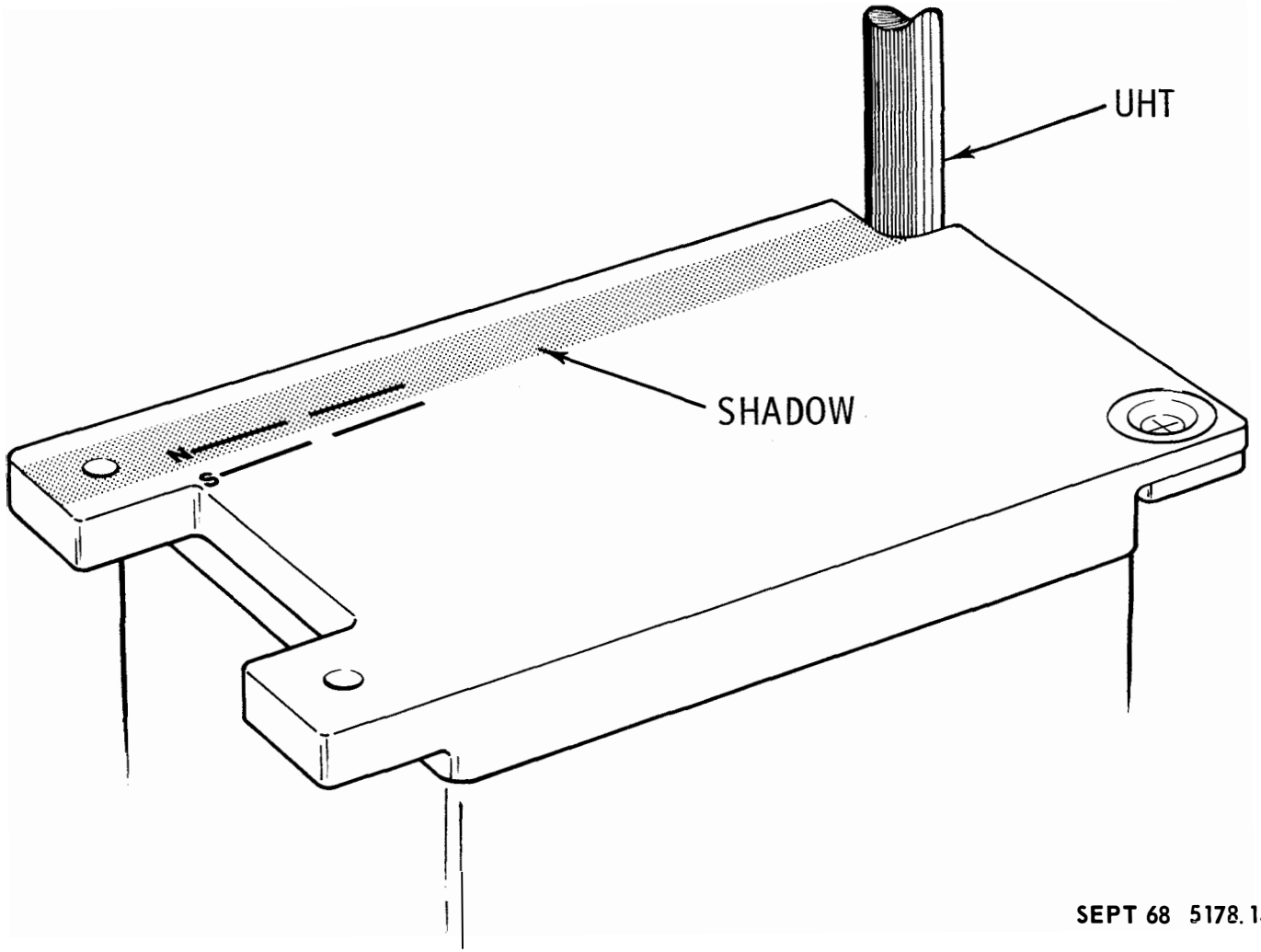

SEPT 68 5178.14.12

CPLEE DIGITAL DATA FORMAT

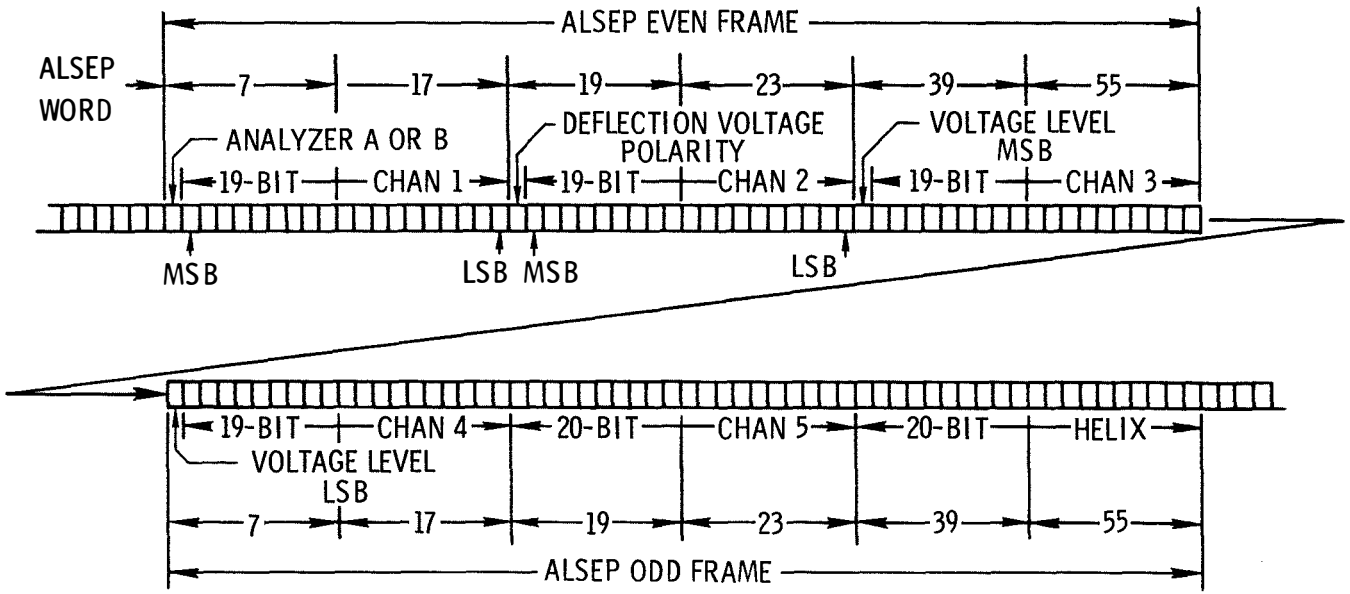

DC-01	THROUGH	DC-34	CPE DET SCI DATA
DC-85	THROUGH	DC-96	CPE CAL SIG
	DC - 97		CPE PHYS/AN ID
	DC - 98		CPE POLARITY ID
	DC - 99		CPE DEF LVL ID

NOV 67 5178.14.13

CPLEE ANALOG DATA

SAMPLED ONCE PER 54-SEC
ALSEP SEQUENCE (ALSEP WORD 33)

AC - 01	CPE	DEF P/S VOLTS
AC - 02	CPE	CHAN/1 VOLTS
AC - 03	CPE	CHAN/2 VOLTS
AC - 04	CPE	CONV VOLTS
AC - 05	CPE	PHYS/AN DEG C
AC - 06	CPE	DEF P/S DEG C

NOTE: AC - 05 IS TEMPERATURE OF PHYSICAL ANALYZER A

CPLEE COMMANDS

OCTAL COMMAND NUMBERS

111 CPE OPR HTR ON

THIS COMMAND BYPASSES THE THERMOSTAT IN THE CPLEE AND TURNS THE OPERATIONAL HEATER ON. TO RESTORE AUTOMATIC THERMAL CONTROL THE EXPERIMENT POWER MUST BE COMMANDED TO STBY AND BACK TO OPER. THIS COMMAND HAS NO CONTROL OVER SURVIVAL (STBY) HEATERS.

112 CPE OPR HTR OFF

THIS COMMAND BYPASSES THE THERMOSTAT IN THE CPLEE AND TURNS THE OPERATIONAL HEATER OFF, AND IS ALSO USED TO TURN OFF THE OPERATIONAL HEATER AFTER IT HAS BEEN TURNED ON BY COMMAND 111. SEE COMMAND 111 FOR RESTORATION OF AUTOMATIC THERMAL CONTROL. THIS COMMAND HAS NO CONTROL OVER SURVIVAL HEATERS. (OPERATIONAL HEATER ON/OFF VIA 111 & 112 CAN BE RECYCLED INDEFINITELY.)

113 CPE CVR GO

THIS COMMAND ACTUATES THE GUILLOTINE DEVICE FOR REMOVING THE CPLEE DUST COVER.

114 CPE DEF SEQ ON

THIS COMMAND STARTS THE AUTOMATIC SEQUENCE OF VOLTAGES TO THE CPLEE DEFLECTION PLATES WHENEVER IT HAS BEEN STOPPED (BY COMMAND 117). INITIAL TURN-ON OF THE EXPERIMENT IS IN THE AUTOMATIC SEQUENCE MODE.

115 CPE DEF STEP

THIS COMMAND ADVANCES THE VOLTAGE ON THE CPLEE DEFLECTION PLATES ONE STEP EACH TIME IT IS USED, IN THE STANDARD SEQUENCE, WHEN THE SEQUENCE HAS BEEN STOPPED. IF AUTOMATIC SEQUENCE IS ON, THIS COMMAND HAS NO EFFECT.

117 CPE DEF SEQ OFF

THIS COMMAND INTERRUPTS THE AUTOMATIC SEQUENCE OF VOLTAGES TO THE CPLEE DEFLECTION PLATES. THE VOLTAGE THEN REMAINS CONSTANT UNTIL ADVANCED BY COMMAND 115. IT IS RESTORED TO AUTOMATIC SEQUENCE BY COMMAND 114 OR BY CYCLING CPLEE TO STBY AND BACK TO OPER.

120 CPE CHAN/HI SEL

THIS COMMAND INCREASES THE VOLTAGE ACROSS THE CHANNELTRON ® ELECTRON MULTIPLIERS IN BOTH PHYSICAL ANALYZERS (A & B) TO THE HIGHER VALUE, ≈ 3200 VOLTS, IF IT IS AT THE LOWER SETTING, ≈ 2800 VOLTS (Δ = 400 VOLTS). IF THIS COMMAND IS SENT TWICE, WITHOUT COMMAND 121 BETWEEN, THE SECOND COMMAND HAS NO EFFECT.

121 CPE CHAN/LO SEL

THIS COMMAND DECREASES THE VOLTAGE ACROSS THE CHANNELTRON ® ELECTRON MULTIPLIERS IN BOTH PHYSICAL ANALYZERS (A & B) TO THE LOWER VALUE, ≈ 2800 VOLTS, IF IT IS AT THE HIGHER SETTING, ≈ 3200 VOLTS (Δ = 400 VOLTS). IF THIS COMMAND IS SENT TWICE, WITHOUT COMMAND 120 BETWEEN, THE SECOND COMMAND HAS NO EFFECT.

COLD CATHODE GAUGE EXPERIMENT (CCGE)

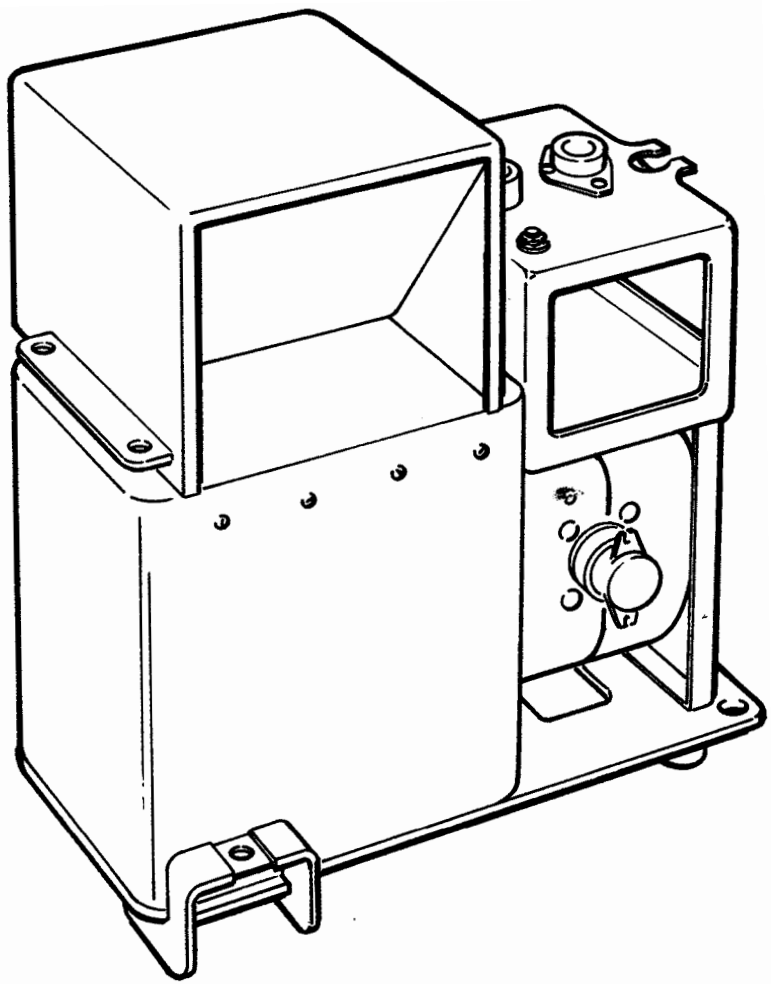

HEIGHT, IN. = 13.4
WIDTH, IN. = 4.6
DEPTH, IN. = 12.0
EARTH WEIGHT, LB = 12.5

JAN 69 5178.15.1

CCGE GENERAL FEATURES

PURPOSE IS TO DETERMINE

- DENSITY OF LUNAR ATMOSPHERE, WHERE TIME-DEPENDENT CHANGES MAY BE
  - RANDOM
  - FUNCTION OF LUNAR CYCLE
  - FUNCTION OF SOLAR ACTIVITY
- LOSS RATE OF CONTAMINANTS LEFT BY ASTRONAUTS & LM

MEASUREMENT TECHNIQUE

- GAUGE PRODUCES AN ELECTRICAL CURRENT PROPORTIONAL TO THE NEUTRAL PARTICLE DENSITY AT ITS POSITION
- CURRENT IS AMPLIFIED & CONVERTED INTO A 10-BIT WORD FOR TRANSMISSION IN THE ALSEP FORMAT

COMBINED WITH MEASURED TEMP OF GAUGE, ALLOWS CALCULATION OF LUNAR ATMOSPHERE PRESSURE

APR 69 5178.15.2

CCGE PERFORMANCE

- RANGE: 10^{-6} TO 10^{-12} TORR
- ACCURACY: $\pm$ 30% ABOVE 10^{-10} TORR, $\pm$ 50% BELOW 10^{-10} TORR
- OPERATING VOLTAGE: + 4500V
- MAGNETIC FIELD: 1020 GAUSS
- GAUGE BODY CONSTRUCTED OF 304 STAINLESS STEEL
- SEVEN OVERLAPPING MEASUREMENT RANGES (SWITCHED BY CMD OR BY INTERNAL LOGIC) HANDLE CURRENTS BETWEEN 10^{-6} AMPS (RANGE 1) AND 10^{-12} AMPS (RANGE 7)

CCGE BLOCK DIAGRAM

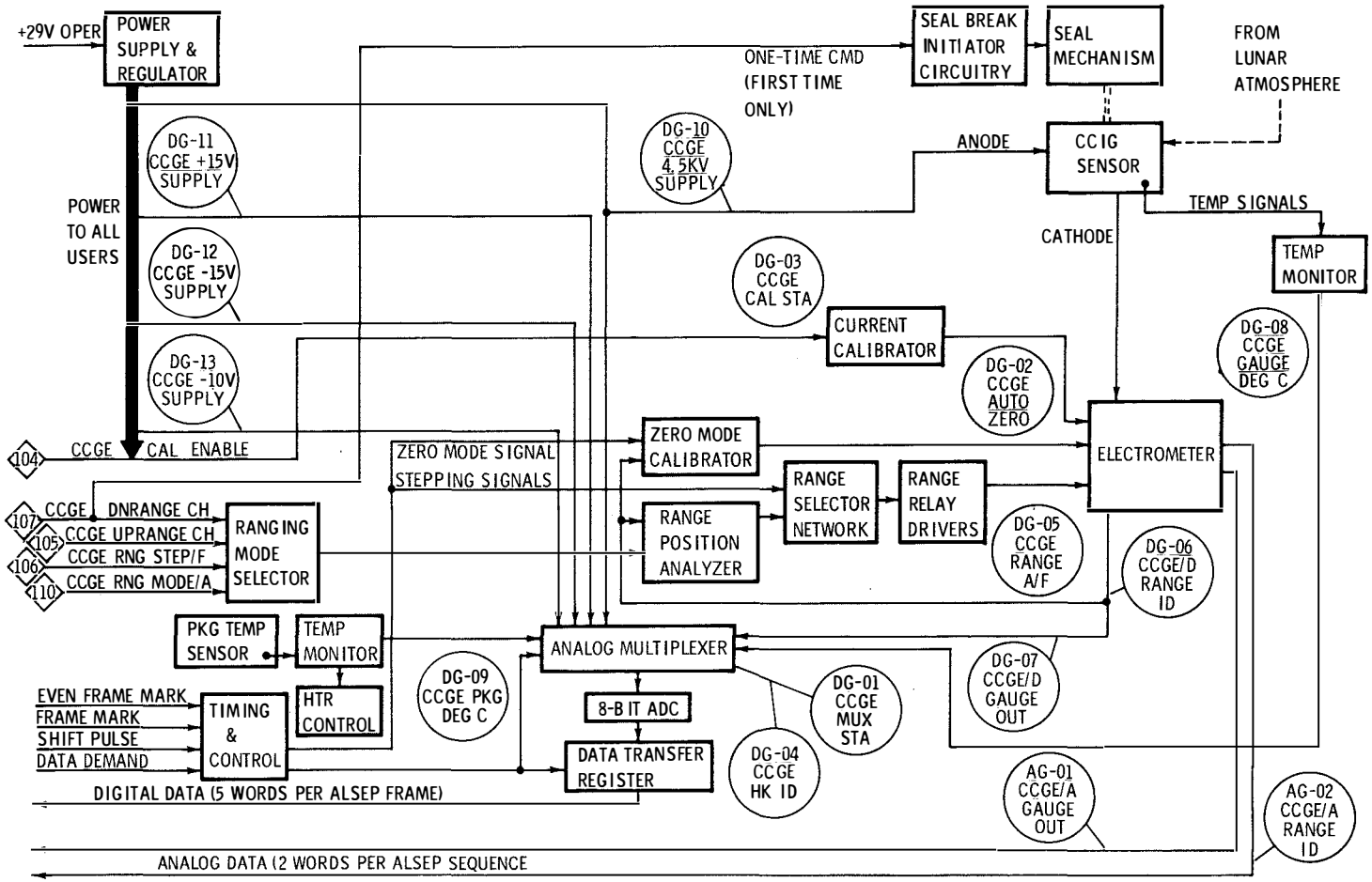

JAN 69 5178.15.4

CCGE SEAL BREAK

- INITIATED BY FIRST TRANSMISSION OF CMD 107 (MAY BE NECESSARY TO TRANSMIT CMD 105 PRIOR TO 107 FOR ACTUATION OF SEAL BREAK)
- EXPLOSIVE-ACTUATED PISTON RELEASES SPRING WHICH RETAINED ORIFICE COVER
- RELEASE OF SPRING CAUSES COVER TO FLIP OFF

CCGE RANGE CHANGE

- 7 OVERLAPPING RANGES FROM 10^{-12} TO 10^{-6} AMPS
- SELECTED EITHER AUTOMATICALLY OR BY COMMAND
- AUTOMATIC
  - UP-DOWN COMPARATOR OF RANGE POSITION ANALYZER SENSES ELECTROMETER OUTPUT VOLTAGE
  - WHEN VOLTAGE PASSES UPPER OR LOWER TRIP POINT VALVES, COMPARATOR SUPPLIES UPRANGE OR DOWNRANGE SIGNAL TO RANGE SELECTOR NETWORK
  - RANGE SELECTOR NETWORK (COUNTING REGISTER) TRACKS THE RANGES, SUPPLIES SIGNALS TO ACTUATE THE RANGE RELAY DRIVERS, & SUPPLIES ANALOG & DIGITAL TM OF RANGE ID
- BY COMMAND
  - TRANSMIT CMD 104 OR 107 TO SELECT UPRANGE OR DOWNRANGE DIRECTION FOR FORCED RANGE CHANGE
  - TRANSMIT CMD 106 TO EXECUTE FORCED RANGE STEP IN THE PRESET DIRECTION. THIS OVERRIDES RANGE POSITION ANALYZER & SUPPLIES SIGNAL TO RANGE SELECTOR NETWORK.
  - NEW RANGE WILL BE RETAINED UNTIL:
    - STEPPED BY TRANSMISSION OF CMD 106
    - REVERSED (CMD 104 OR 107) & STEPPED (CMD 106)
    - RESET TO AUTOMATIC MODE (CMD 110)

CCGE SELF CALIBRATION

- PROVIDES CHECK OF ELECTROMETER CURRENT-TO-VOLTAGE CONVERSION & CORRECTS (COMPENSATES) FOR ELECTROMETER ZERO DRIFT
- CURRENT CALIBRATION
  - TRANSMISSION OF CMD 104 ENABLES CURRENT CALIBRATOR
  - CALIBRATION OCCURS AT NEXT CYCLE OF ZERO COMPENSATION
  - GAUGE OUTPUT TO ELECTROMETER IS REPLACED BY PRECISION CURRENT SOURCE
  - ELECTROMETER STEPS THROUGH 7 RANGES
  - AFTER 7 CALIBRATION STEPS, CURRENT SOURCE IS REPLACED BY GAUGE OUTPUT (NORMAL OPERATION)
- ZERO MODE CALIBRATOR
  - ACTUATED BY INTERNAL TIMING EVERY 30.9 MIN
  - GAUGE OUTPUT TO ELECTROMETER IS DISCONNECTED & OFFSET COMPENSATION NETWORK ADJUSTED (AUTOMATICALLY) TO CORRECT FOR SIGNAL DRIFT
  - CCGE THEN RETURNS TO NORMAL OPERATION, UNLESS CURRENT CALIBRATION HAS BEEN ENABLED (CMD 104)

CCGE THERMAL CONTROL

- STRUCTURAL HOUSING COVERED WITH THERMAL COATING
- SUNSHIELD (WITH REFLECTOR) SHADES THERMAL PLATE FROM DIRECT SUNLIGHT & ALLOWS RADIATIVE COUPLING TO DEEP SPACE
- REFLECTOR REDUCES HEAT INPUT FROM LUNAR SURFACE TO THERMAL PLATE
- ELECTRICAL HEATER PROVIDES 4.5W INPUT TO ELECTRONICS
  - INTERMITTENTLY IN OPER PWR MODE (CONTROL "ON" BELOW $\approx$ 20°F)
- NORMAL OPERATION (LUNAR DAY/NIGHT) FOR ELECTRONICS ANTICIPATED +85°C TO -20°C

CCGE POWER PROFILE

- SEAL BREAK BY CAPACITANCE DISCHARGE

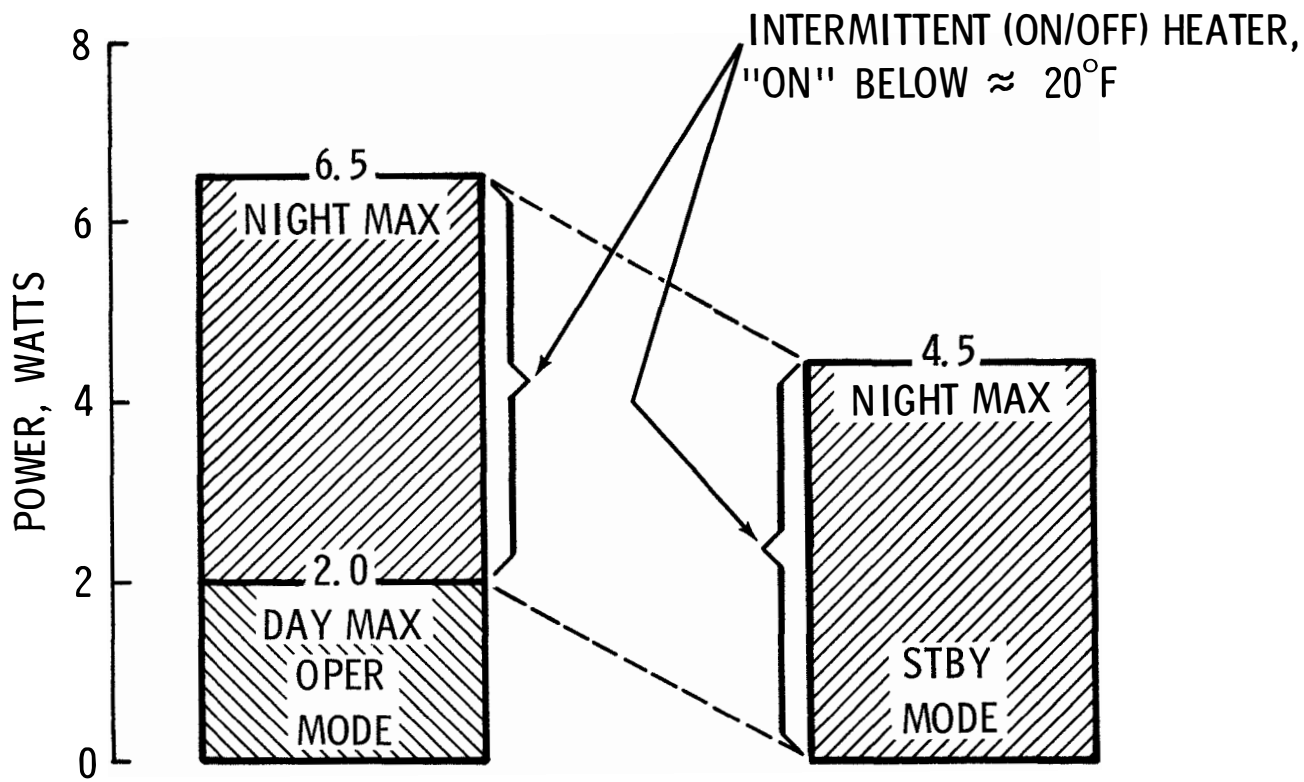

APR 69 5178.15.9

CCGE EMPLACEMENT CRITERIA

PARAMETER	REQUIREMENT	PRIORITY	INDICATOR	COMMENTS
DISTANCE FROM SUBPACKAGE 1	55 ± 5 FT (60-FT CABLE)	2	PACED OFF	INTERCHANGEABLE WITH SIDE
DIRECTION FROM SUBPACKAGE 1	S (MAY BE N)	2	EYEBALL	TO SATISFY ORIFICE REQUIREMENT
SITE SELECTION	≈ SMOOTH	2	EYEBALL	NO LEGS ON CCGE
LEVEL, WRT INDICATOR	5° OF HORIZ	1	BUBBLE	INTERACTS WITH ALIGNMENT
ALIGN, WRT SHADOW	5° OF E-W	1	ARROW & "E"	SHADOW OF UHT COVERS "E"
ALIGN ORIFICE	AWAY FROM (± 90°) LM & CENT STA	2	EYEBALL	EXACT ALIGNMENT SET BY SHADOW REQUIREMENT
SPECIAL REQUIREMENTS	PLANNED DEPLOYMENT IS SOUTH OF CENT STA BUT WOULD BE REVERSED IF LM IS SOUTH OF CENT STA			

JAN 69 5178.15.10

CCGE COMMANDS

OCTAL CMD NUMBER

104 CCGE CAL ENABLE

THIS CMD (CG-01) IS A 1-STATE CMD WHICH CAUSES THE ELECTROMETER CALIBRATION CYCLE TO OCCUR AT THE NEXT ZERO MODE CALIBRATION (EVERY 30.9 MIN). IF CMD 104 IS TRANSMITTED MORE THAN ONCE BEFORE THE TIME OF CALIBRATION ARRIVES, THE EFFECT IS THE SAME AS ONE CMD. AN ELECTROMETER CALIBRATION CYCLE CONSISTS OF STEPPING THROUGH THE 7 RANGES OF MEASUREMENT WHILE APPLYING PRECISION CURRENTS TO THE ELECTROMETER.

105 CCGE UPRANGE CH

THIS CMD (CG-02) IS A 1-STATE CMD WHICH SELECTS THE UPRANGE DIRECTION FOR FORCED RANGE CHANGES. REPEATED TRANSMISSION OF THIS CMD HAS NO EFFECT. SUBSEQUENT TRANSMISSION OF CMD 106 CAUSES THE RANGE CHANGE AND LOCKS OUT THE AUTOMATIC RANGE CHANGE. IT MAY BE NECESSARY TO TRANSMIT CMD 105, FOLLOWED BY CMD 107, TO EXECUTE THE CCGE SEAL BREAK

106 CCGE RNG STEP/F

THIS CMD (CG-03) IS A MULTI-STATE CMD WHICH FORCES THE ELECTROMETER SENSITIVITY RANGE TO CHANGE ONE STEP (IN THE DIRECTION PRE-SELECTED BY CMD 105 OR 107) EACH TIME CMD 106 IS TRANSMITTED. CMD 106 ALSO LOCKS OUT AUTOMATIC RANGE CHANGES UNTIL RELEASED BY CMD 110. REPEATED TRANSMISSION OF CMD 106 ADVANCES THE RANGE UNTIL THE MAXIMUM (OR MINIMUM) VALUE IS OBTAINED: FURTHER TRANSMISSION HAS NO EFFECT.

107 CCGE DNRANGE CH

THIS CMD (CG-04) IS A 1-STATE CMD, SIMILAR TO CMD 105, EXCEPT THAT IT SELECTS THE DOWNRANGE DIRECTION FOR FORCED RANGE CHANGES. IT ALSO BREAKS THE CCGE SEAL AT THE TIME OF FIRST TRANSMISSION UNLESS THE TOGGLE IS IN THE ADVERSE SETTING. IF SO, CMD 105 FOLLOWED BY CMD 107 WILL EXECUTE CCGE SEAL BREAK

110 CCGE RNG MODE/A

THIS CMD (CG-05) IS A 1-STATE CMD WHICH, FOLLOWING TRANSMISSION OF CMD 106, RELEASES THE RANGE CHANGE LOCKOUT AND ENABLES AUTOMATIC RANGE CHANGES, REPEATED TRANSMISSION OF THIS CMD HAS NO EFFECT. AT TURN-ON, THE CCGE INITIALIZES IN THE AUTOMATIC MODE OF (RANGE CHANGE) OPERATION.

CCGE DATA FORMAT

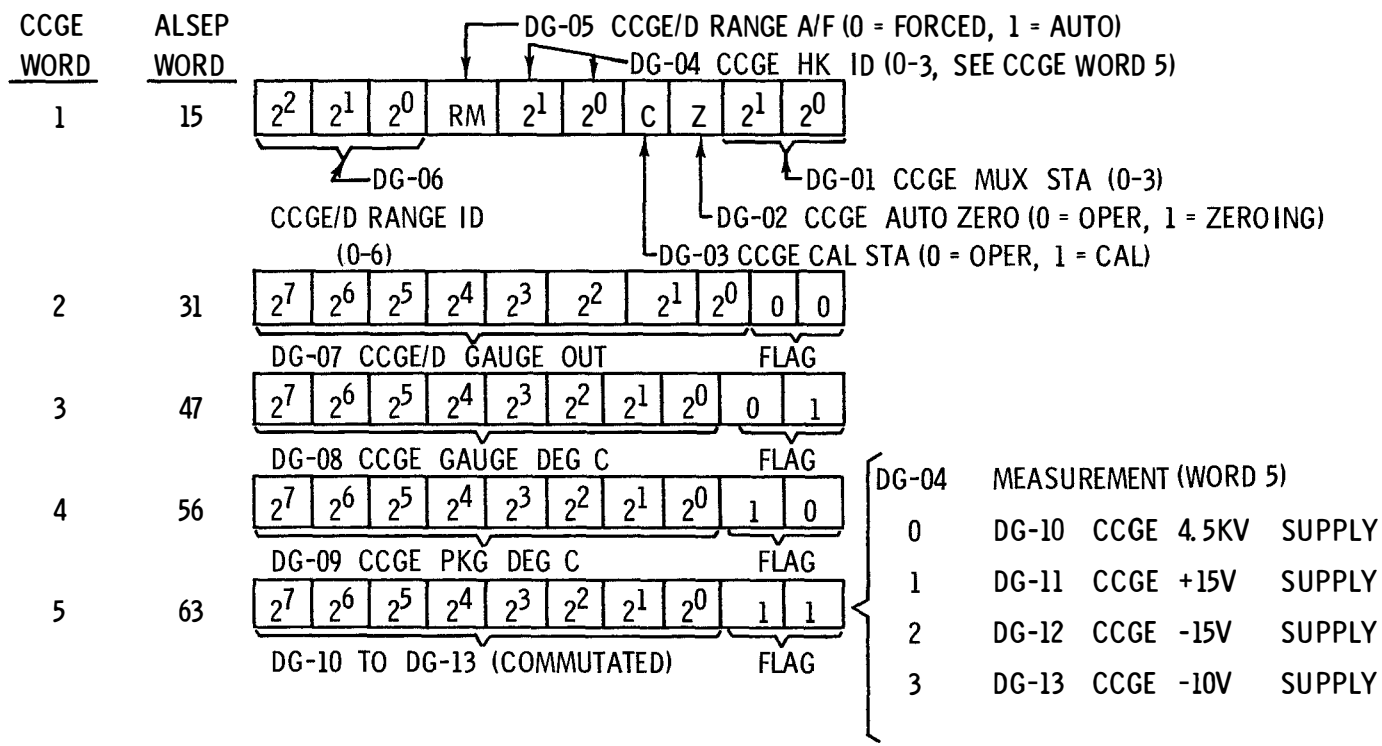

APR 69 5178.15.12

CCGE DATA SUMMARY

DG-01	CCGE MUX STA	DG-08	CCGE GAUGE DEG C
DG-02	CCGE AUTO ZERO	DG-09	CCGE PKG DEG C
DG-03	CCGE CAL STA	DG-10	CCGE 4.5KV SUPPLY
DG-04	CCGE HK ID	DG-11	CCGE +15V SUPPLY
DG-05	CCGE RANGE A/F	DG-12	CCGE -15V SUPPLY
DG-06	CCGE/D RANGE ID	DG-13	CCGE -10V SUPPLY
DG-07	CCGE/D GAUGE OUT		

AG-01	CCGE/A GAUGE OUT
AG-02	CCGE/A RANGE ID

MSFN/MCC OPERATIONS

- GENERAL REQUIREMENTS
  - CMD & TM PROCESSING
  - SOFTWARE & DISPLAYS
- SPECIAL REQUIREMENTS
  - POWER/THERMAL MANAGEMENT
  - COMMAND FUNCTION STATUS BOARD
- DETAILED MCC MONITORING ACTIVITIES

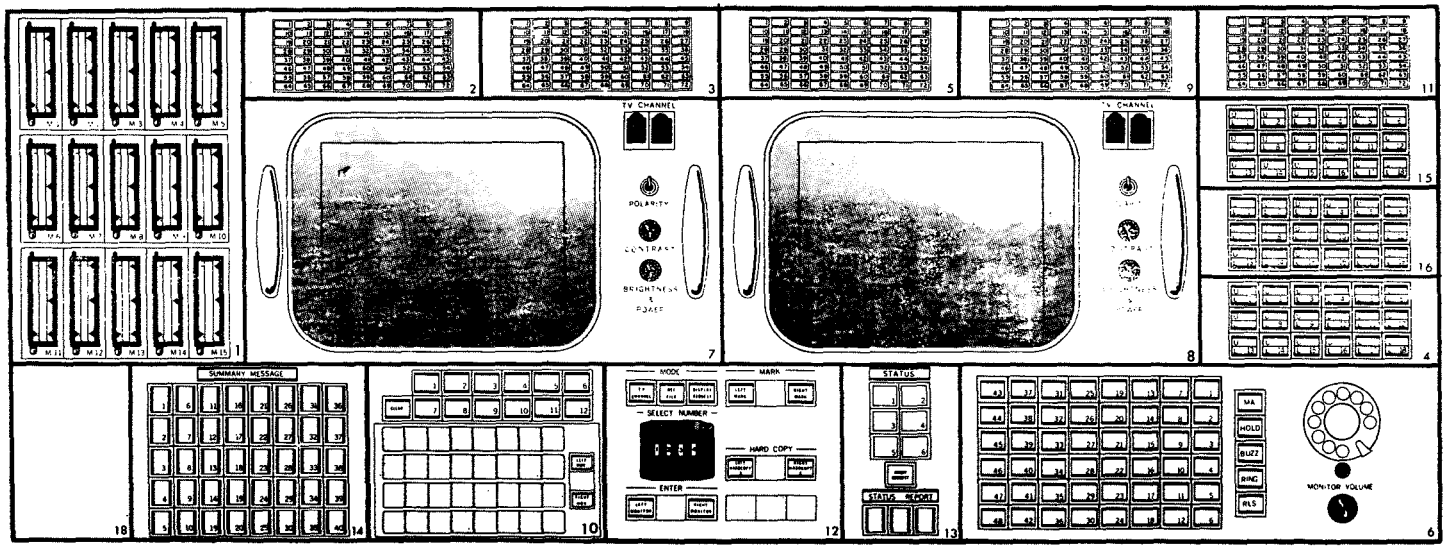

JAN 69 5178.16.1

COMMAND CONSOLE PLAN

TENTATIVE

- ALL COMMANDS FOR ALL ALSEPS FROM 1 CONSOLE
- USE UNIVERSAL COMMAND SYSTEM PANEL
  - ADDRESS: ANY ONE OF 8 ALSEP DECODERS
  - COMMAND: ANY ONE OF 100 DESIGNATIONS (PREFERABLY OCTAL 003 TO 174)
  - EXECUTE

NOTES: (1) STANDARD VERIFICATION CHECKS WILL BE INCORPORATED; AT LEAST, GROUND REJECT

(2) NO AUTOMATIC RETRANSMIT PROCEDURE

TM PROCESSING AT MSFN SITES

ALSEP	MINIMUM REQUIREMENT	REMARKS
1,3	THROUGHPUT 2 DATA STREAMS MAX TO MCC, NO DECOMM REQ'D UNLESS THERE IS A DECISION TO MONITOR CMD VERIFICATION	TECHNIQUE FOR SENDING 2 STREAMS 1.06 KBPS EACH (NORMAL) ON ONE 2.4 KBPS LINE TBD. NOTE ALSEP FRAME = 0.60377 SEC
4	SAME AS ABOVE FOR MAJORITY OF TIME ADDITIONAL DECOMM REQM'T FOR ASE 10.6 KBPS DATA RATE TO REDUCE IT TO < 2.4 KBPS & SEND TO MCC. DURING ASE OPERATIONS NO OTHER ALSEP DATA STREAM IS SENT TO MCC	85-FT SITE REQ'D FOR 10.6 KBPS DATA. EXCEPT FOR ≈ 1 HR WHILE CREW IS ON LUNAR SURFACE, OTHER ASE OPERATIONS CAN BE SCHEDULED FOR CONVENIENCE

RECORDING REQ'D FOR MAX OF 3 ALSEPS SIMULTANEOUSLY PLUS RCVD STATION TIME. PLAYBACK REQMT'S TBD.

APR 69 5178.16.3

SOFTWARE

- ONE CDP COMMAND PROGRAM WILL SUPPORT ALL ALSEPS
- DECOM PROGRAMS VARY BETWEEN ALSEPS
- CAL CURVES VARY BETWEEN ALSEPS
- IN ADDITION TO VERY COMPLICATED SUBCOMMUTATION & SUPER COMMUTATION, MANY ALSEP PARAMETERS REQUIRE MORE COMPUTATION THAN ENG UNIT CONVERSION & LIMIT SENSING

DISPLAYS

FOR ALSEP 1

NOTE:

RETENTION OF HISTORICAL DATA MUST BE MINIMIZED

SUBSYSTEM	REAL-TIME MONITORING				HISTORY	
	H/S PRINTER	METERS	ANALOG CHARTS	EVENT LIGHTS/CRT	H/S PRINTER	ANALOG CHARTS
CENTRAL STATION	L	H	B	D	L+D	B
PASSIVE SEISMIC	L		B+S	D	L+D	B+S
MAGNETOMETER	L		B	D	L+D	B
SOLAR WIND	A				A	
SUPRATHERMAL ION	L		B	D	L+D	B

LEGEND

L = LIMIT-SENSED PARAMETERS

H = HIGH-PRIORITY ANALOGS

D = DISCRETE

B = 8-CHANNEL BRUSH RECORDER (SCIENCE DATA > 1 SAMPLE/SEC)

S = SPECIAL SINGLE CHANNEL DRUM RECORDERS WITH VARIABLE BAND-PASS FILTERS

A = ALL SWS DATA IN MATRIX FORMAT (1 MATRIX = 28 SEC)

APR 69 5178.16.5

MULTIPLE-ALSEP DISPLAY PHILOSOPHY

DISPLAY	REMARKS
H/S PRINTER	SAME SUBSYSTEM ON DIFFERENT ALSEPS WILL USE SAME DISPLAY BUT DIFFERENT FORMATS
METERS & EVENT LIGHTS	EACH ALSEP WILL HAVE ITS OWN METERS & LIGHTS; HENCE THESE DISPLAYS WILL GIVE VALID DATA WHENEVER THEIR BIT STREAM IS BEING PROCESSED
ANALOG RECORDERS	SWITCHABLE IN REAL TIME BETWEEN DIFFERENT BIT STREAMS
CAPABILITY FOR PROCESSING 2 BIT STREAMS SIMULTANEOUSLY PROVIDES FOR PANEL LIGHT INDICATING OUT-OF-LIMITS WHENEVER IT IS DETECTED (EITHER ALSEP); ALSO INDICATES (1) WHICH ALSEP & (2) WHICH SUBSYSTEM	

POWER/THERMAL MANAGEMENT

REQUIREMENT

- RTG SUPPLIES CONSTANT POWER (NO MORE, NO LESS) AT A PARTICULAR VOLTAGE. OVERLOAD & UNDERLOAD ON RTG WILL CAUSE SERIOUS CHANGES IN RTG VOLTAGE
- PCU ADDS OR REMOVES SHUNT LOADS (UP TO 40 W) TO MAINTAIN CONSTANT SYSTEM LOAD ON RTG
- PDR LOADS CAN BE COMMANDED ON/OFF TO ASSIST PCU
- IF SYSTEM OVERLOAD OCCURS (WHEN PCU CANNOT UNLOAD ENOUGH), EXPERIMENTS ARE RIPPLED OFF AUTOMATICALLY TO REACH SATISFACTORY LOAD (TURN-ON BY COMMAND ONLY)
- IF SYSTEM UNDERLOAD (OR OVERLOAD) EXCEEDS PCU CAPABILITY, 12V LINE WILL GO UP (OR DOWN). AT 13V OR 11V, PCU 1 SWITCHES AUTOMATICALLY TO PCU 2 (PCU 2 HAS NO SWITCHBACK LOGIC & WILL OPERATE OUTSIDE 11-13V RANGE)

MCC ACTIVITIES

- MONITOR TM DATA FOR RESERVE POWER (PCU SHUNT) & ADJUST LOADS BY COMMAND TO AVOID RIPPLE-OFF, SWITCH-OVER, OR SYSTEM FAILURE

  NOTE: (1) RESERVE POWER TM ONLY EVERY 54 SEC
  (2) EXPER POWER PROFILES ARE VARIABLE & ASYNCHRONOUS
  (3) NO TM OF INDIVIDUAL EXPER POWER
  (4) PCU SHUNT LOAD VARIATIONS CAUSE NON-LINEAR (BUT PREDICTABLE) INTERNAL DISSIPATION IN PCU. THIS CAN CAUSE SERIOUS THERMAL DISTURBANCE OF CENTRAL STATION
- MAINTAIN, AS A FLIGHT CONTROL TOOL, A POWER/THERMAL FORECAST FOR SEVERAL HOURS IN ADVANCE & PARTICULARLY BEFORE MAJOR COMMAND OR TIMER EVENTS

COMMAND FUNCTION STATUS BOARD

REQUIREMENT

- ALSEP 1 WILL USE 65 OF THE 100 AVAILABLE CMDs (REMAINDER MAY BE CONSIDERED INVALID)
- SIDE USES 5 CMDs MULTIPLEXED TO PERFORM 2 ONE-TIME & 15 REPETITIVE FUNCTIONS RESULTING IN 890 "CONFIGURATIONS"
- PSE & LSM USE SINGLE CMDs REPETITIVELY FOR MULTI-STATE FUNCTIONS
- CMDs INTERACT; EXAMPLE, ONE CMD ADDRESSES X, Y OR Z-AXIS WHILE THE NEXT CMD ACTIVATES THE ADDRESSED UNIT (PSE & LSM)
- LSM HAS 7-STATE FUNCTIONS; CMD MUST BE SENT 7 TIMES TO RETURN TO INITIAL STATE
- RESULT FOR LSM IS 20,000 "CONFIGURATIONS"
- INTERNAL TIMER PROVIDES SCHEDULED FUNCTIONS (BACKUP TO EXISTING CMDs) & INTERNAL PROTECTION CAUSES UNSCHEDULED SWITCHING

APR 69 5178.16.8

DETAILED MONITORING ACTIVITIES

- ALSEP START-UP ACTIVITIES
  - EXPERIMENT TURN-ON
  - TYPICAL EXPER CHECKOUT (EXAMPLE, PSE)
- TYPICAL ALSEP 1 MCC OPERATIONS
  - FUNCTIONAL CHECKS
  - CRITICAL PARAMETERS

JAN 69 5178.16.9

EXPERIMENT TURN-ON

ALSEP 1

- CHECK S/N RATIO AT MSFN
- SYNC & DECOM AT MCC
- CMD BACK-UP DATA MODES AS REQUIRED
- CMD EXPERIMENT 2 OPER (LSM)
- VERIFY RECEIPT & EXECUTION OF CMD
- CONFIRM POWER LOAD & RESERVE POWER STATUS
- CMD EXPERIMENT 1 OPER (PSE)
- VERIFY CMD EXECUTION & POWER STATUS AS ABOVE
- CONTINUE FOR EXPERIMENTS 3 & 4 (SWS & SIDE)
- CMD DUST DETECTOR ON
- VERIFY PRESENCE OF DUST DETECTOR DATA
- CONFIRM POWER STATUS

TYPICAL EXPERIMENT CHECKOUT

(EXAMPLE, PSE)

- CHECK SCIENTIFIC & ENGINEERING DATA OF THE PSE
- UNCAGE PSE (MAY OCCUR PRIOR TO LM ASCENT)
- LEVEL THE PSE
- CALIBRATE THE PSE
- CHECK TEMPERATURE OF THE PSE
- COLLECT BASELINE PSE DATA

TYPICAL ALSEP 1 MCC OPERATIONS

POST 45 DAYS

1. BRING BIT STREAM IN BUILDING, DECOM, PROCESS, & BRING UP DISPLAYS; MEANWHILE, VERIFY THAT CMD PANEL IS HOT
2. CHECK CMD FUNCTION STATUS FOR CHANGES SINCE END OF PREVIOUS MONITORING PERIOD
3. COMPARE POWER/THERMAL STATUS TO FORECAST
4. OBSERVE CENTRAL STATION PARAMETERS FOR OUT-OF-LIMITS CONDITIONS OR OTHER ANOMALIES; IF ANY EXIST, LOG STATUS, DETERMINE CAUSES, & CMD AS APPROPRIATE
5. EXAMINE PSE FOR SATISFACTORY DATA (1.2 SEC); SEND CORRECTIVE CMDs, IF NECESSARY
6. EXAMINE LSM DATA (9.66 SEC) FOR PROPER OPERATION & SETTINGS; CMD AS REQUIRED
7. DETERMINE WHETHER SWS IS FUNCTIONING PROPERLY BY OBSERVING FULL DATA CYCLE (7.6 MIN); NO FUNCTIONAL CMDs TO SWS EXCEPT POWER OPER/STBY/OFF
8. EXAMINE SIDE DATA (FULL CYCLE ≈1 HR) FOR PROPER OPERATION & MEASUREMENT RANGES; ADJUST BY CMD, IF NECESSARY

NOTES

- INDICATED TIMES ARE FOR ONE CYCLE OF DATA AT NORMAL BIT RATE
- MAINTAIN LOG OF ALL CMDs SENT & STATUS CHANGES
- INDICATED TASKS DO NOT HAVE TO BE SERIAL

JAN 69 5178.16.12

TRANSMITTER CHECK

- CHECK XMTR A CRYSTAL & HEAT SINK TEMPERATURES
- CHECK RF OUTPUT POWER LEVELS
- SWITCH TO BACKUP XMTR, IF REQUIRED
- CHECK XMTR B TEMPERATURES & POWER LEVELS AS ABOVE

DIAGNOSTIC CHECKS

- CHECK LEVEL OF RECEIVED POWER AT MSFN STATION
- CHECK PRELIMITING SIGNAL LEVEL OF ALSEP RCVR
- DETERMINE CENTER FREQUENCY OF ALSEP RCVR BANDPASS
- DETERMINE RF LEVEL OF ALSEP RCVR LOCAL OSCILLATOR
- CHECK FOR PRESENCE OF 1 KHz SUBCARRIER
- CHECK OUTPUT VOLTAGES OF DUST DETECTOR

TEMPERATURE CHECKS AND THERMAL CONTROL

- CHECK CENTRAL STATION TEMPERATURES
- CHECK RTG TEMPERATURES
- CHECK DUST DETECTOR TEMPERATURES
- CMD CENTRAL STATION HEATER ON/OFF, AS REQUIRED

DEC 67 5178.16.15

POWER SUPPLY STATUS CHECK

- VERIFY THAT PCU 1 IS OPERATING
- CHECK PCU 1 TEMPERATURES
- CHECK PCU 1 OPERATING VOLTAGES
- CHECK POWER RESERVE STATUS
- CMD POWER DISSIPATION RESISTORS ON/OFF AS REQUIRED
- SWITCH TO PCU 2 ONLY IF FAILURE IS IMMINENT
- CHECK ADC CALIBRATION

CRITICAL CENTRAL STATION PARAMETERS

EQUIPMENT	CONTINGENCY	CORRECTIVE ACTION
POWER	1. RTG HOT & COLD FRAME TEMPS ABNORMALLY HI OR LO 2. PCU SHUNT CURRENT HI OR LO 3. ABNORMAL PCU TEMPS OR VOLTAGES	1. MAY BE UNDER LOAD OR OVER-LOAD BUT PROBABLY INCIPENT FAILURE & NO CORRECTIVE ACTION; COLLECT MAX DATA IN TIME REMAINING 2. UNDERLOAD OR OVERLOAD. AD-JUST PDR & SWITCH EXPER OPER/STBY TO LOCATE CAUSE 3. ADJUST LOADS & PREPARE TO SWITCH PCU 2 IF SITUATION DETERIORATES
DATA	1. LOSS OF CARRIER, MODULA-TION OR SYNC 2. WEAK OR NOISY SIGNAL 3. LOSS OF 6 OR 15 ANALOG CHANNELS 4. SUBCOMM DATA NOT OK 5. NON-ZERO IN CMD VERIF WORD WHEN NO CMD WAS SENT 6. ABNORMAL TEMPS IN COM-PONENTS (OR ENTIRE CENTRAL STATION)	1. SWITCH TO ALTERNATE XMTR OR DATA PROCESSOR 2. SWITCH TO LOW BIT RT & TROUBLE SHOOT (LSM DATA INVALID IN LBR) 3. MULTIPLEXER MALF; SWITCH TO ALTERNATE DATA PROCESSOR 4. SWITCH DATA PROCESSORS 5. INCIPIENT DECODER LOCKOUT; SWITCH TO ALTERNATE DATA PROCESSOR BEFORE SENDING ANY OTHER CMDS 6. SWITCH TO REDUNDANT EQUIP (MAN HTR ON/OFF)

DEC 67 5178.16.17

CRITICAL PASSIVE SEISMIC PARAMETERS

CONTINGENCY	CORRECTIVE ACTION	COMMENTS
1. INSTRUMENT OFF-LEVEL (INDICATED BY TIDAL DATA)	1. CMD LVL, AS NECESSARY	1. SINCE LEVEL SHOULD CHANGE SLOWLY (IF AT ALL) ANY CMD LVL SHOULD BE CLEARED WITH PI
2. SEISMIC DATA OFF SCALE OR INSIGNIFICANT	2. ADJUST AMPLIFIER GAINS	2. SEE NOTE
3. ERRATIC TIDAL DATA	3. CMD PSE FILT OUT	3. WITH FILT OUT, TIDAL DATA SHOULD BE SAME AS SEISMIC
4. ABNORMAL TEMPS	4. CMD PSE HTR A/M & REGULATE TEMPS MANUALLY (PSE CAN OVERHEAT QUICKLY, THIS ACTION IS URGENT)	4. AUTO/MAN CMD HAS 4 STATES & HTR CAN BE SWITCHED FULL ON OR FULL OFF; CAN ALSO SWITCH ALL PWR OFF IF TEMPS ARE RISING RAPIDLY
5. POSSIBLE OUT-OF-CALIBRATION	5. CMD CALIBRATIONS (TIMER ON SHORT PERIOD)	5. CALIB INTERVALS TBD

NOTE: AVOID SENDING ANY COMMANDS DURING SIGNIFICANT SEISMIC ACTIVITY

APR 69 5178.16.18

CRITICAL MAGNETOMETER PARAMETERS

CONTINGENCY	CORRECTIVE ACTION	COMMENTS
1. SCIENCE DATA NEAR FULL-SCALE, NEAR ZERO, OR OFF-CENTER	1. ADJUST GAINS & OFFSETS AS NECESSARY	1. POSSIBLE DUE TO CHANGES IN LUNAR ENVIRONMENT (NOTIFY PI PROMPTLY)
2. ERRATIC OR TOO FREQUENT FLIP/CAL	2. CMD ALSEP TIMER INHIBIT & FLIP/CAL BY LSM CMD	2. DURING INTERMITTENT MONITORING FLIP/CAL BY TIMER (EVERY 12 HR) CAN BE DETECTED FROM SENSOR POSITION TM
3. SCIENCE DATA NOT OK	3. CMD LSM FILT IN/OUT	3. BYPASS (REMOVAL) OF FILTER RESULTS IN ROUGH, BUT USABLE, DATA
4. NON-UNIFORM OR UNEXPECTED SENSOR TEMPS	4. CMD LSM T CTL XY (SEE NOTE)	4. SWITCHES THERMAL CONTROL BETWEEN SENSOR HEADS (EITHER CAN BE SELECTED)
5. OTHER ABNORMAL TEMPS	5. NO CORRECTIVE ACTION, TURN EXPER OFF IF IT ENDANGERS ALSEP	5. NO THERMAL CONTROL OVERRIDE & NO STBY HTR (IF LSM IS NOT OPERATING, IT HAS NO POWER)

NOTE: FOR BEST OPERATION, FLIP/CAL MUST BE PERFORMED WHENEVER SENSOR TEMP CHANGES 3° C

DEC 67 5178.16.19

CRITICAL SIDE PARAMETERS

CONTINGENCY	CORRECTIVE ACTION	COMMENTS
1. SIGNIFICANT CHANGE IN DISTRIBUTION OF SCIENCE DATA	1. ADJUST SAMPLING MODE (INTERNAL PROGRAMS STEP THROUGH A RANGE; VARIOUS MODE CMDs DELETE PORTIONS OF THIS RANGE)	1. POSSIBLY DUE TO CHANGE IN LUNAR ENVIRONMENT (NOTIFY PI PROMPTLY); NON-NORMAL MODES MAY SHORTEN TIME FOR COMPLETE DATA CYCLE
2. MAJOR DECREASE IN MEASURED FLUX	2. CMD X10 INTEGRATION	2. MAKES FULL CYCLE $\lesssim$ 10 HR
3. OUT-OF-CALIBRATION	3. CMD CALIBRATION	3. NORMAL MODE INC CAL EVERY 2.5 MIN BUT OTHER MODES MAY NOT
4. ABNORMAL TEMPS	4. CMD EXPER STBY OR OFF IF RISING RAPIDLY	4. NO THERMAL CONTROL OVERRIDE

OTHER CMDs ALLOW PORTIONS OF THE EXPERIMENT TO BE TURNED ON/OFF INDEPENDENTLY BUT THERE IS NO CORRECTIVE ACTION FOR MOST OUT-OF-LIMITS CONDITIONS OR HANG-UPS

CCIG PORTION OF SIDE HAS TEMP MEASUREMENT IN CONTACT WITH LUNAR SURFACE (THE ONLY ONE ON ALSEP)

DEC 67 5178.16.20

ALSEP ABBREVIATIONS

a	ampere
AB	Analog Bistatic (Discrete) Measurement (Code)
AC	Alternating Current
ACCEL	Acceleration
ACCPT	Accept
ACK	Acknowledge
ACN	Ascension Island (MSFN)
A/D	Analog to Digital
ADC	Analog-to-Digital Converter
ADD	Address
ADJ	Adjustment
ADV	Advance
AE	Analog Electrical Parameter (Code)
AEC	Atomic Energy Commission
A/F	Automatic/Forced
AGC	Automatic Gain Control
AIM	Aiming
ALGE	Apollo Lunar Geological Equipment
ALHT	Apollo Lunar Hand Tools
ALSD	Apollo Lunar Surface Drill
ALSEP	Apollo Lunar Surface Experiments Package
ALT	Alternate
AMPL	Amplifier
AMP	Amperes-pl is AMPs Amplifier(s)
AMU	Atomic Mass Unit
ANT	Antenna
APPROX	Approximate, Approximately
A/PW	Analog to Pulse Width
AR	Analog Temp. of RTG (Code)
ARC	Ames Research Center
ASE	Active Seismic Experiment
ASI	Apollo Standard Initiators
ASSY	Assembly
ASTRO	Astronaut
AT	Analog Temperature Parameter (Code)
ATTEN	Attenuator
AUTO	Automatic
AWG	American Wire Gage
AZ	Azimuth
B1	Bottom Location of Structure Temperature Measurement
BATT	Battery
BER	Bit Error Rate
BIOMED	Biomedical
BKG	Background
BPS	Bits per Second
BTU	British Thermal Unit
C	Centigrade
CAL	Calibrate, Calibration
CAP	Capacitor
CCGE	Cold Cathode Gauge Experiment (Part of SIDE)
CCGE/A, CCGE/D	Analog and Digital ID Read Out from CCGE
CCIG	Cold Cathode Ion Gauge (Instrument Portion of CCGE)
CDP	Command Data Processor
C/E	Central Electronics (of ASE)
CENT STA	Central Station
CFE	Contractor-Furnished Equipment
CG	Center of Gravity
CH	Change, Channel (Data)
CHAN	Channeltron; used in CPE as: CHAN/1 Channeltron P/S #1 CHAN/2 Channeltron P/S #2 CHAN/HI Channeltron Voltage Increase ON CHAN/LO Channeltron Voltage Increase OFF

CIRC	Circular
CKT	Circuit-CKTS (Pl)
CKT BKR	Circuit Breaker
CLD	Cold
CMzyx	Continuous Motor (Connections on LSM)
CM	
CMD	Command (CMDs, Commands) Commanded
CNB	Canberra, Australia (MSFN)
CNT(s)	Count(s)
CNTR	Counter
CO	Continuous (Motor Circuit on LSM)
COAX	Coaxial Cable
CON	Connector
COMM	Communications
CONFIG	Configuration
CONN	Connection
CONT	Controlled-Control (Cont. = Continued)
CONV	Converter
CPE	See CPLEE
CPLEE	Charged-Particle Lunar Environment Experiment (Also CPE)
CPS	Cycles per Second
CRT	Cathode Ray Tube
CST	Central Station Timer
CTL	Control
CUR	Current
CV	Command Verification
CVR	Cover
CRV/S	Cover and Seal (used on SIDE)
CW	Clockwise
db	Decibels
dbm	Decibels, with reference to one milliwatt
DC	Direct Current
DDP	Digital Data Processor
DECOM	Decommutate, Decommutation
DEF	Deflection
DEG	Degrees
DEMOD	Demodulator
DET	Detect, Detection, Detector
DIAM	Diameter
DIR	Direction
DIR/V	Direction and Speed (used on PSE)
DISSIP	Dissipation
DIST	Distribution
DSS	Data Subsystem; components include:
	DSS/A Analog Data Processor
	DSS/D Digital Data Processor
	DSS/PROC Complete Data Processor (Redundant)
E	East
ea	Each
EGFU	Electronics/Gimbal Flip Unit (LSM)
EL	Elevation
ELECT	Electrical
ELEV	Elevation
EM	Electromagnetic
EMI	Electromagnetic Interference
ENG	Engineering
EOS	Electro-Optical Systems (Xerox)
EPS	Electrical Power Subsystem
EQUIP	Equipment
EQUIV	Equivalent
ev	Electron Volts
EVA	Extravehicular Activities (or Astronaut)
EXP	Experiment
EXPER	Experiment
EXT	External
F	Fahrenheit, Flight
FEP	Fluorinated Ethylene Propylene
FET	Field Effect Transistor

FILT	Filter
FLD	Field
FLIP/CAL	Flip/Calibrate (LSM)
FREQ	Frequency
FT	Foot
FTT	Fuel Transfer Tool
FWD	Forward
g	Gravity
GAL	Gravity (used as μ gal on PSE)
GDS	Goldstone, California (MSFN)
GDT	Gradient Sensor Delta Temperatures (HFE)

PROBE	1		2	
BRIDGE	UPPER	LOWER	UPPER	LOWER
HIGH SENSITIVITY	GDT11H	GDT12H	GDT21H	GDT22H
LOW SENSITIVITY	GDT11L	GDT12L	GDT21L	GDT22L

GEN	Generator
GEO	Geophone
GFE	Government-Furnished Equipment
GHz	GigaHertz
GLA	Grenade Launch Assembly (a component of ASE)
GMBL	Gimbal
GMT	Greenwich Mean Time
GND	Ground
GSFC	Goddard Space Flight Center
GT	Gradient Sensor Ambient Temperatures (HFE)

PROBE	1		2	
BRIDGE	UPPER	LOWER	UPPER	LOWER
CODE	GT11	GT12	GT21	GT22

GWM	Guam (MSFN)
HAW	Kauai Island, Hawaii (MSFN)
HBR	High Bit Rate
HECPA	High Energy Curved Plate Analyzer (a component of SIDE)
HFE	Heat Flow Experiment
HI	High
HK	Housekeeping, High Conductivity (HFE)
HORIZ	Horizontal
HR	Hour
H/S	High Speed
HTR	Heater; on HFE there are two cases: HTR/HK High Conductivity Heater HTR/LK Low Conductivity Heater
HV	High Voltage
Hz	Hertz
ID	Identification
IF	Intermediate Frequency
IN	Input
IN.	Inch
INC	Including, Included, Increase
INHIB	Inhibit
INST	Instrument
INSUL	Insulation
INT	Internal
INTEG	Integrator
ISO	Prefix meaning "single"
JPL	Jet Propulsion Laboratory
K	Kelvin, Kilo
KBPS	Kilobits per Second
kev	Kilo-Electron Volts
KHz	KiloHertz
KSC	Kennedy Space Center
KV	Kilovolt
KW	Kilowatt

LB	Pound (LBs, plural)
LBR	Low Bit Rate
LECPA	Low Energy Curved Plate Analyzer (a component of SIDE)
LGE	Lunar Geological Equipment
LK	Low Conductivity (HFE)
LM	Lunar Module
LO	Low
LOG	Logarithmic
LP	Launch Phase, Long Period (PSE)
LPDTμL	Low-Power Diode Transistor Micro Logic
LSB	Least Significant Bit
LSM	Lunar Surface Magnetometer
LV	Low Voltage
LVL	Level
M	Meter
MA	Milliampere
MAD	Madrid (MSFN)
MAP	Message Acceptance Pulse
MAX	Maximum
MCC	Mission Control Center
MDE	Mode
MEAS	Measurement
MECH	Mechanical, Mechanism
MEG	Million (as in Megohm)
MFG	Manufacturing
MHz	MegaHertz
MIN	Minimum, Minute
MISC	Miscellaneous
MODE	Operating Modes are defined as follows: for HFE MODE/G Gradient Mode MODE/HK High Conductivity Mode MODE/LK Low Conductivity Mode
MON	Monitor(ing)
MS	Millisecond (also MSEC)
MSB	Most Significant Bit
MSC	Manned Spacecraft Center
MSEC	Millisecond
MSP	Measurement Sequence Programmer
MSFN	Manned Space Flight Network
MTG	Mounting
MTR	Motor; on PSE, the three motors are MTRX, MTRY, and MTRZ
MUX	Multiplexer
MV	Millivolt
mw	Milliwatt
MW/CM2	Milliwatts per Square Centimeter
mμ	Millimicron
N	North, Number
NA	Nano Amperes, Not Applicable
NASA	National Aeronautics and Space Administration
NBR	Normal Bit Rate
NEG	Negative
NG	No Good
Ni	Nickel
NO.	Number
NORM	Normal
NRC	National Research Corporation
NRZ	Non-Return to Zero
OPER	Operate, Operation, Operating, Operator, Operational
OR'ED	Processed through an "OR" gate
O/S	Offset
OSC	Oscillator
O/T	One-Time
OUT	Output
PARAM	Parameter
PCB	Printed Circuit Board
PCM	Pulse Code Modulation
PCT	Percent

PCU	Power Conditioning Unit
PDR	Power Dissipation Resistor
PDU	Power Distribution Unit
Pe	Probability of Bit Error
PERF	Performance
PET	Package Elapsed Time (from RTG Plug-In)
PF	Picofarad
PHYS/AN	Physical Analyzer (a component of the CPLEE)
PKG	Package
PL	Plane
PLSS	Portable Life Support System
PM	Phase Modulation
POS	Positive
POSN	Position
PRA	Parabolic Reflector Array (of LSM)
PREAMP	Preamplifier
PRELIM	Preliminary
PRE/LIM	Pre-Limiting
PRE/REG	Pre-Regulator (a component of the SIDE Power Supply)
PRI/ST	Primary Structure
PROP	Proportional
PROC	Processor
PROG	Programmer
P/S	Power Supply
PSE	Passive Seismic Experiment; also: PSE/LP Long Period Sensors PSE/SP Short Period Sensor PSE/LP/SP Long and Short Period Sensors Long Period Sensors are further defined as PSE/X, PSE/Y, and PSE/Z while PSE/XY denotes the two horizontal long period sensors
PSI	Pounds per Square Inch
PSIA	Pounds per Square Inch Absolute
Pu 238	Plutonium Isotope
PWR	Power
QTY	Quantity
R	Resistor (used as R1 and R2)
RAD	Radians
RAD/SEC^2	Radians per Second per Second
RCVD	Received
RCVR	Receiver
RDT	Ring Sensor Delta Temperature (HFE)

PROBE	1		2	
BRIDGE	UPPER	LOWER	UPPER	LOWER
CODE	RDT11	RDT12	RDT21	RDT22

RE	Reference (Motor Circuit on LSM)
REF	Reference
REG	Regulator, Register
REP	Repetition
REQD	Required
REQMT	Requirement (REQMTs, pl)
RES	Reserve
RMX, Y, Z	Reference Motor (connections on LSM: e.g., RMX)
RNG	Range
ROT	Rotation, Rotate
RST	Reset
RT	Rate (as in BIT RT, CNT RT, etc.)
RT	Ring Sensor Ambient Temperatures (HFE)

PROBE	1		2	
BRIDGE	UPPER	LOWER	UPPER	LOWER
CODE	RT11	RT12	RT21	RT22

RTC	Real Time Command
RTE	Real Time Event
RTG	Radioisotope Thermoelectric Generator
RTN	Return
S	South
S/C	Spacecraft
SCAS	Southwest Center for Advance Studies
SCI	Scientific, Science
SEC	Second
SEL	Select, Selector, Selection
SEQ	Sequence, Sequential; used on HFE as: SEQ/FUL Full Sequence SEQ/P1 Probe 1 Sequence SEQ/P2 Probe 2 Sequence Used on ASE as: SEQ/S Sequential
SEQ	Scientific Equipment (a Bay in LM)
SIDE	Suprathermal Ion Detector Experiment; also: SIDE/A Analog and Digital SIDE/D Voltages or Readings SIDE/HE High Energy Analog Data SIDE/LE Low Energy Analog Data SIDE/LHE Least Significant High Energy Digital Data SIDE/LLE Least Significant Low Energy Digital Data SIDE/MHE Most Significant High Energy Digital Data SIDE/MLE Most Significant Low Energy Digital Data
SIG	Signal
SLA	Spacecraft/LM Adapter
SMEK	Summary Message Enable Keyboard
S/N	Signal to Noise
SNAP	Systems for Nuclear Auxiliary Power-Type 27
SNSR	Sensor
SOS	Space Ordnance Systems, Inc.
SP	Split Phase, Short Period (PSE)
SPEC	Specification
SPST	Single Pole, Single Throw
SRC	Specimen Return Container
S/T	Structure/Thermal
STA	Status, Station (Cent Sta)
STBY	Standby
SW	Switch
SWS	Solar Wind Spectrometer
SYNC	Synchronization (abbreviated "SY" on APOLLO)
T	Temperature (also used as "Thermal" on ALSEP)
T_o	Zero Reference Time of Timer
TAPLE	Telemetry for Apollo Passive Lunar Experiments
TBD	To Be Determined
TC	Thermocouple; on HFE, four cable ambient temperatures are read on each Probe: TC1A, TC1B, TC1C, TC1D (Probe 1) TC2A, TC2B, TC2C, TC2D (Probe 2)
TEMP	Temperature (TEMPs, p1)
TERM	Terminal
TM	Telemetry
TMR	Timer
TNT	Trinitrotoluene
TORR	Unit of Pressure (one Millimeter of Mercury)
TRANS	Transmitter

TRW	TRW, Inc. (Manufacturer)
TV	Television
UHT	Universal Handling Tool
USGS	United States Geological Survey
UV	Ultraviolet
V	Volt, Velocity (used to indicate "Speed" on PSE in "LVL DIR/V")
Vcc	Transistor Supply Voltage
VCO	Voltage Controlled Oscillator
VDC	Volts Direct Current
VERT	Vertical
V/FILT	Velocity Filter
V/M	Volts per Meter
VSWR	Voltage Standing Wave Ratio
W	Watt, West
W_1, W_2, W_3	Wall Locations of Structure Temperatures
WD	Word (WDs, pl)
WRT	With Respect To
WT	Weight
XMTR	Transmitter
XYZ, XYO	Axes of LSM, where XYO indicates X, or Y, or neither
YR	Year
γ	Gamma (unit of Magnetic Flux)
μGAL	Microgal
μSEC	Microsecond