JSC-09423

# APOLLO PROGRAM SUMMARY REPORT

*National Aeronautics and Space Administration*

***LYNDON B. JOHNSON SPACE CENTER***

***Houston, Texas***

April 1975

# September 2005 Publication Note

The Apollo Program Summary Report, JSC-09423, is a summary of the major activities of Apollo. It provides reference material for those who need additional information about the project. It was published in April of 1975 by NASA. The original document was provided by Tom Sheehan, who was a Johnson Space Center Network Controller during the Apollo missions.

This PDF version was produced by Bill Wood. The original pages were scanned with an Epson Expression 10000XL, using Silverfast AI Studio, to produce high quality 300 pixel per inch, 48-bit images, for further processing. Each page image was straightened and cleaned up in Photoshop CS2 prior to producing 150 pixel-per-inch GIF page images. Microsoft Word 2002 was used to compose the page images into a DOC file prior to conversion to PDF pages. Where available, high resolution NASA color images were obtained from Kipp Teague's Project Apollo Archive and used to replace the printed black and white halftone images. Finally, Adobe Acrobat 7 Professional was used to add the bookmarks before the final PDF edition was produced.

Bill Wood was a Unified S-Band Lead Engineer at the Goldstone Apollo MSFN station during the lunar missions. Tom Sheehan was the head of the MSC Instrumentation Support Team as well as a network controller during the Apollo and Skylab missions. Both are now retired in Barstow, California and Houston, Texas, USA.

JSC-09423

# APOLLO PROGRAM SUMMARY REPORT

NATIONAL AERONAUTICS AND SPACE ADMINISTRATION
LYNDON B. JOHNSON SPACE CENTER
HOUSTON, TEXAS
April 1975

The Earth above the lunar horizon, photographed during the Apollo 8 mission with a 70-mm electric camera equipped with a medium telephoto (250-mm) lens.

# FOREWORD

This report is intended to summarize the major activities of Apollo and to provide sources of reference for those who desire to pursue any portion to a greater depth. Personal recognition is not given in any case except for the crewmen who were assigned to the missions. Indeed, any step beyond this would literally lead to the naming of thousands of men and women who made significant contributions, and, unavoidably, the omission of the names of many others who played an equally significant part; however, all of these people must undoubtedly have a feeling of satisfaction in having been a part of one of man's most complex and, at the same time, noble undertakings.

CONTENTS


| Section | | Page |
|---|---|---|
| 1.0 | INTRODUCTION | 1-1 |
| 2.0 | FLIGHT PROGRAM | 2-1 |
| 2.1 | SATURN LAUNCH VEHICLE AND APOLLO SPACECRAFT DEVELOPMENT FLIGHTS | 2-1 |
| 2.1.1 | Mission SA-1 | 2-1 |
| 2.1.2 | Mission SA-2 | 2-3 |
| 2.1.3 | Mission SA-3 | 2-3 |
| 2.1.4 | Mission SA-4 | 2-4 |
| 2.1.5 | Mission SA-5 | 2-4 |
| 2.1.6 | Mission A-101 | 2-5 |
| 2.1.7 | Mission A-102 | 2-5 |
| 2.1.8 | Mission A-103 | 2-7 |
| 2.1.9 | Mission A-104 | 2-9 |
| 2.1.10 | Mission A-105 | 2-9 |
| 2.2 | APOLLO SPACECRAFT ABORT TESTS | 2-11 |
| 2.2.1 | Pad Abort Test 1 | 2-11 |
| 2.2.2 | Mission A-001 | 2-13 |
| 2.2.3 | Mission A-002 | 2-13 |
| 2.2.4 | Mission A-003 | 2-15 |
| 2.2.5 | Pad Abort Test 2 | 2-15 |
| 2.2.6 | Mission A-004 | 2-16 |
| 2.3 | UNMANNED APOLLO/SATURN FLIGHTS | 2-17 |
| 2.3.1 | Mission AS-201 | 2-17 |
| 2.3.2 | Mission AS-203 | 2-19 |
| 2.3.3 | Mission AS-202 | 2-21 |
| 2.3.4 | Apollo 4 Mission | 2-22 |
| 2.3.5 | Apollo 5 Mission | 2-24 |
| 2.3.6 | Apollo 6 Mission | 2-26 |
| 2.4 | MANNED APOLLO/SATURN FLIGHTS | 2-27 |
| 2.4.1 | Apollo I Mission | 2-27 |
| 2.4.2 | Apollo 7 Mission | 2-27 |
| 2.4.3 | Apollo 8 Mission | 2-29 |
| 2.4.4 | Apollo 9 Mission | 2-32 |
| 2.4.5 | Apollo 10 Mission | 2-34 |
| 2.4.6 | Apollo 11 Mission | 2-36 |
| 2.4.7 | Apollo 12 Mission | 2-38 |
| 2.4.8 | Apollo 13 Mission | 2-39 |

Section Page

2.4.9 Apollo 14 Mission . . . . . 2-41
2.4.10 Apollo 15 Mission . . . . . 2-45
2.4.11 Apollo 16 Mission . . . . . 2-48
2.4.12 Apollo 17 Mission . . . . . 2-51

2.5 REFERENCES . . . . . 2-54

3.0 SCIENCE SUMMARY . . . . . 3-1

3.1 INTRODUCTION . . . . . 3-1

3.2 LUNAR SURFACE SCIENCE . . . . . 3-1

3.2.1 Geology of the Apollo 11 Landing Site . . . . . 3-4
3.2.2 Geology of the Apollo 12 Landing Site . . . . . 3-8
3.2.3 Geology of the Apollo 14 Landing Site . . . . . 3-11
3.2.4 Geology of the Apollo 15 Landing Site . . . . . 3-15
3.2.5 Geology of the Apollo 16 Landing Site . . . . . 3-19
3.2.6 Geology of the Apollo 17 Landing Site . . . . . 3-23
3.2.7 Geology and Soil Mechanics Equipment . . . . . 3-26
3.2.7.1 Apollo lunar surface handtools . . . . . 3-26
3.2.7.2 Tool carriers . . . . . 3-29
3.2.7.3 Apollo lunar sample return container . . . . . 3-29
3.2.7.4 Bags and special containers . . . . . 3-29
3.2.7.5 Lunar surface sampler . . . . . 3-33
3.2.7.6 Lunar roving vehicle soil sampler . . . . . 3-33
3.2.7.7 Penetrometers . . . . . 3-33
3.2.7.8 Apollo lunar surface drill . . . . . 3-33
3.2.8 Apollo Lunar Surface Experiments Package/ Central Station . . . . . 3-36
3.2.9 Passive Seismic Experiment . . . . . 3-41
3.2.10 Active Seismic Experiment . . . . . 3-44
3.2.11 Lunar Seismic Profiling Experiment . . . . . 3-45
3.2.12 Lunar Surface Magnetometer Experiment . . . . . 3-45
3.2.13 Lunar Portable Magnetometer Experiment . . . . . 3-46
3.2.14 Heat Flow Experiment . . . . . 3-48
3.2.15 Lunar Surface Gravimeter Experiment . . . . . 3-48
3.2.16 Traverse Gravimeter Experiment . . . . . 3-50
3.2.17 Surface Electrical Properties Experiment . . . . . 3-50
3.2.18 Neutron Probe Experiment . . . . . 3-51
3.2.19 Laser Ranging Retroreflector . . . . . 3-51
3.2.20 Charged-Particle Lunar Environment Experiment . . . . . 3-52
3.2.21 Solar Wind Spectrometer Experiment . . . . . 3-53
3.2.22 Solar Wind Composition Experiment . . . . . 3-54

Section | Page


3.2.23 Suprathermal Ion Detector and Cold-Cathode Gage Experiments . . 3-54
3.2.24 Cosmic Ray Detector Experiment . . . . . 3-56
3.2.25 Lunar Ejecta and Meteorites Experiment . . . . . 3-57
3.2.26 Lunar Atmospheric Composition Experiment . . . . . 3-60
3.2.27 Lunar Dust Detector . . . . . 3-62
3.2.28 Surveyor III Analysis . . . . . 3-62
3.2.29 Particle Implantation Studies . . . . . 3-62
3.2.30 Long-Term Lunar Surface Exposure . . . . . 3-63
3.2.31 Far-Ultraviolet Camera/Spectrograph . . . . . 3-63

3.3 LUNAR ORBITAL SCIENCE . . . . . 3-65

3.3.1 Bistatic Radar . . . . . 3-65
3.3.2 S-Band Transponder . . . . . 3-71
3.3.3 Infrared Scanning Radiometer . . . . . 3-71
3.3.4 Lunar Sounder . . . . . 3-72
3.3.5 Particle Shadows/Boundary Layer . . . . . 3-73
3.3.6 Magnetometer . . . . . 3-75
3.3.7 Subsatellite Performance . . . . . 3-75
3.3.7.1 Apollo 15 . . . . . 3-75
3.3.7.2 Apollo 16 . . . . . 3-76
3.3.8 Cosmic Ray Detector (Helmets) . . . . . 3-76
3.3.9 Apollo Window Meteoroid . . . . . 3-76
3.3.10 Gamma-Ray Spectrometer . . . . . 3-77
3.3.11 X-Ray Fluorescence . . . . . 3-78
3.3.12 Alpha-Particle Spectrometer . . . . . 3-79
3.3.13 Mass Spectrometer . . . . . 3-79
3.3.14 Far-Ultraviolet Spectrometer . . . . . 3-80
3.3.15 Lunar Mission Photography From the Command and Service Module . . . . . 3-81
3.3.16 Lunar Multispectral Photography . . . . . 3-82
3.3.17 Candidate Exploration Sites Photography . . . . . 3-82
3.3.18 Selenodetic Reference Point Update . . . . . 3-82
3.3.19 Transearth Lunar Photography . . . . . 3-82
3.3.20 Service Module Orbital Photographic Tasks . . . . . 3-83
3.3.21 Command Module Orbital Science Photography . . . . . 3-85
3.3.22 Visual Observations From Lunar Orbit . . . . . 3-86
3.3.23 Gegenschein From Lunar Orbit . . . . . 3-87
3.3.24 Ultraviolet Photography - Earth and Moon . . . . . 3-87
3.3.25 Dim-Light Photography . . . . . 3-88
3.3.26 Command Module Photographic Tasks . . . . . 3-88

Section Page

3.4 EARTH RESOURCES PHOTOGRAPHY . . . . . 3-90

3.4.1 Synoptic Terrain Photography . . . . . 3-90
3.4.2 Synoptic Weather Photography . . . . . 3-90
3.4.3 Multispectral Terrain Photography . . . . . 3-90

3.5 BIOMEDICAL EXPERIMENTS . . . . . 3-91

3.5.1 Microbial Response to Space Environment . . . . . 3-91
3.5.2 Biostack Experiment . . . . . 3-95
3.5.3 Biological Cosmic Radiation Experiment . . . . . 3-95

3.6 INFLIGHT DEMONSTRATIONS . . . . . 3-98

3.6.1 Fluid Electrophoresis . . . . . 3-98
3.6.1.1 Apollo 14 . . . . . 3-100
3.6.1.2 Apollo 16 . . . . . 3-100
3.6.2 Liquid Transfer . . . . . 3-100
3.6.2.1 Unbaffled tanks . . . . . 3-101
3.6.2.2 Baffled tanks . . . . . 3-102
3.6.3 Heat Flow and Convection . . . . . 3-102
3.6.3.1 Apollo 14 demonstration . . . . . 3-102
3.6.3.2 Apollo 17 demonstrations . . . . . 3-103
3.6.3.3 Summary of interpretations . . . . . 3-104
3.6.4 Composite Casting . . . . . 3-104

3.7 REFERENCES . . . . . 3-105

4.0 VEHICLE DEVELOPMENT AND PERFORMANCE . . . . . 4-1

4.1 SATURN LAUNCH VEHICLES . . . . . 4-1

4.1.1 Introduction . . . . . 4-1
4.1.2 Saturn I . . . . . 4-1
4.1.3 Saturn IB . . . . . 4-4
4.1.4 Saturn V . . . . . 4-4
4.1.5 Design and Development . . . . . 4-4
4.1.6 Mission Performance . . . . . 4-6

4.2 LITTLE JOE II PROGRAM . . . . . 4-6

4.2.1 Introduction . . . . . 4-6
4.2.2 Launch Vehicle Development . . . . . 4-7
4.2.3 Spacecraft . . . . . 4-7
4.2.4 Concluding Remarks . . . . . 4-11

| Section | | Page |
|---|---|---|
| 4.3 | COMMAND AND SERVICE MODULE DEVELOPMENT PROGRAM | 4-11 |
| 4.3.1 | Introduction | 4-11 |
| 4.3.2 | Block I and Block II Hardware | 4-12 |
| 4.3.2.1 | Boilerplate spacecraft | 4-12 |
| 4.3.2.2 | Block I spacecraft | 4-12 |
| 4.3.3.3 | Block I ground test vehicles and fixtures | 4-12 |
| 4.3.3.4 | Block II spacecraft | 4-13 |
| 4.3.2.5 | Block II ground test program | 4-13 |
| 4.4 | COMMAND AND SERVICE MODULE SYSTEMS DEVELOPMENT AND PERFORMANCE | 4-13 |
| 4.4.1 | Introduction | 4-13 |
| 4.4.2 | Structures | 4-13 |
| 4.4.3 | Thermal Management Systems | 4-19 |
| 4.4.3.1 | Thermal protection | 4-19 |
| 4.4.3.2 | Thermal control | 4-20 |
| 4.4.4 | Mechanical Systems | 4-23 |
| 4.4.4.1 | Earth landing system | 4-23 |
| 4.4.4.2 | Docking mechanism | 4-25 |
| 4.4.4.3 | Crew support/restraint and impact attenuation systems | 4-25 |
| 4.4.4.4 | Uprighting system | 4-27 |
| 4.4.4.5 | Side access hatch | 4-29 |
| 4.4.4.6 | Experiment deployment mechanisms | 4-29 |
| 4.4.5 | Cryogenic Storage System | 4-29 |
| 4.4.6 | Electrical Power System | 4-35 |
| 4.4.6.1 | Fuel cells | 4-35 |
| 4.4.6.2 | Batteries | 4-41 |
| 4.4.6.3 | Power conversion and distribution | 4-41 |
| 4.4.7 | Propulsion Systems | 4-42 |
| 4.4.7.1 | Service propulsion system | 4-43 |
| 4.4.7.2 | Reaction control systems | 4-44 |
| 4.4.8 | Guidance, Navigation and Control System | 4-46 |
| 4.4.9 | Environmental Control System | 4-50 |
| 4.4.10 | Displays and Controls | 4-53 |
| 4.4.11 | Communications System | 4-54 |
| 4.4.12 | Instrumentation System | 4-55 |
| 4.5 | LUNAR MODULE DEVELOPMENT PROGRAM | 4-57 |
| 4.5.1 | Introduction | 4-57 |
| 4.5.2 | Test Articles and Ground Test Program | 4-57 |
| 4.5.2.1 | Mockups | 4-57 |
| 4.5.2.2 | Test models | 4-59 |
| 4.5.2.3 | Lunar module test articles | 4-59 |

Section Page


4.5.3 Unmanned Flight Test Program . . . . . 4-59
4.5.4 Manned Vehicles . . . . . 4-59
4.5.4.1 Apollo 9 through Apollo 14 lunar modules . . . . . 4-59
4.5.4.2 Extended-stay lunar modules . . . . . 4-66

4.6 LUNAR MODULE SYSTEMS DEVELOPMENT AND PERFORMANCE . . . . . 4-66

4.6.1 Introduction . . . . . 4-66
4.6.2 Structures . . . . . 4-66
4.6.2.1 Shear panel fatigue and thickness control . . . . . 4-66
4.6.2.2 Stress corrosion . . . . . 4-66
4.6.2.3 Internally machined struts . . . . . 4-68
4.6.2.4 Parts interchangeability . . . . . 4-68
4.6.2.5 Flight performance . . . . . 4-68
4.6.3 Thermal Control System . . . . . 4-68
4.6.4 Landing Gear . . . . . 4-69
4.6.5 Electrical Power System . . . . . 4-71
4.6.5.1 Batteries . . . . . 4-71
4.6.5.2 Power conversion and distribution . . . . . 4-72
4.6.6 Propulsion Systems . . . . . 4-73
4.6.6.1 Descent propulsion system . . . . . 4-73
4.6.6.2 Ascent propulsion system . . . . . 4-75
4.6.6.3 Reaction control system . . . . . 4-76
4.6.7 Guidance, Navigation and Control System . . . . . 4-78
4.6.8 Environmental Control . . . . . 4-82
4.6.9 Displays and Controls . . . . . 4-85
4.6.10 Communications System . . . . . 4-85
4.6.11 Radar Systems . . . . . 4-87
4.6.12 Instrumentation System . . . . . 4-89

4.7 ADDITIONAL SPACECRAFT DEVELOPMENT CONSIDERATIONS . . . . . 4-90

4.7.1 Introduction . . . . . 4-90
4.7.2 Electrical Wiring System . . . . . 4-90
4.7.3 Pyrotechnic Devices . . . . . 4-92
4.7.4 Sequencing System . . . . . 4-93
4.7.5 Optical and Visual Aids . . . . . 4-95
4.7.6 Emergency Detection System . . . . . 4-96
4.7.7 Development Flight Instrumentation . . . . . 4-96
4.7.8 Fracture Control . . . . . 4-97

Section Page

4.8 LUNAR SURFACE MOBILITY . . . . . 4-98

4.8.1 Modular Equipment Transporter . . . . . 4-98

4.8.2 Lunar Roving Vehicle . . . . . 4-98

4.8.2.1 Apollo 15 . . . . . 4-101

4.8.2.2 Apollo 16 . . . . . 4-103

4.8.2.3 Apollo 17 . . . . . 4-103

4.9 LUNAR SURFACE COMMUNICATIONS . . . . . 4-103

4.9.1 Introduction . . . . . 4-103

4.9.2 Extravehicular Communications Unit . . . . . 4-104

4.9.3 Lunar Communications Relay Unit . . . . . 4-104

4.9.4 Television Camera Systems . . . . . 4-107

4.10 FLIGHT CREW SYSTEMS AND EQUIPMENT . . . . . 4-108

4.10.1 Extravehicular Mobility Unit . . . . . 4-108

4.10.1.1 Pressure garment assembly . . . . . 4-108

4.10.1.2 Portable life support system . . . . . 4-112

4.10.1.3 Oxygen purge system . . . . . 4-114

4.10.1.4 Buddy secondary life support system . . . . . 4-115

4.10.1.5 Transearth extravehicular system . . . . . 4-115

4.10.2 Crew Station Configuration and Equipment . . . . . 4-115

4.10.2.1 Command module crew station and equipment . . . . . 4-117

4.10.2.2 Lunar module crew station and equipment . . . . . 4-119

4.11 REFERENCES . . . . . 4-121

5.0 SPACECRAFT DEVELOPMENT TESTING . . . . . 5-1

5.1 INTRODUCTION . . . . . 5-1

5.2 WHITE SANDS TEST FACILITY . . . . . 5-1

5.3 MANNED SPACECRAFT CENTER . . . . . 5-1

5.4 REFERENCES . . . . . 5-2

6.0 FLIGHT CREW SUMMARY . . . . . 6-1

6.1 CREW REPORT . . . . . 6-1

6.1.1 Training . . . . . 6-1

6.1.2 Mission Experience . . . . . 6-4

6.1.2.1 Launch through docking . . . . . 6-4

6.1.2.2 Translunar and transearth coast . . . . . 6-5

6.1.2.3 Command and service module thrusting maneuvers . . . . 6-5

6.1.2.4 Lunar module checkout . . . . . 6-6

6.1.2.5 Lunar module thrusting maneuvers . . . . . 6-6

6.1.2.6 Lunar module landings . . . . . 6-7

6.1.2.7 Lunar surface operations . . . . . 6-8

Section Page

6.1.2.8 Rendezvous and docking . . . . . 6-12
6.1.2.9 Lunar orbit operations . . . . . 6-13
6.1.2.10 Command module extravehicular activity . . . . . 6-14
6.1.2.11 Crew accommodation to zero gravity . . . . . 6-14
6.1.2.12 Guidance and navigation systems . . . . . 6-14
6.1.2.13 Entry and landing . . . . . 6-16

6.2 FLIGHT CREW TRAINING PROGRAM . . . . . 6-16

6.3 FLIGHT PLANNING . . . . . 6-19

6.3.1 Flight Plan Development . . . . . 6-23
6.3.1.1 Flight planning techniques . . . . . 6-23
6.3.1.2 Alternate and contingency flight plans . . . . . 6-23
6.3.1.3 Flight plan verification using simulators . . . . . 6-24
6.3.2 Flight Plan Execution . . . . . 6-24
6.3.3 Change Control . . . . . 6-24

6.4 OPERATIONAL PHOTOGRAPHY . . . . . 6-25

6.4.1 Equipment Summary . . . . . 6-25
6.4.2 Photographic Results . . . . . 6-25
6.4.3 Conclusions . . . . . 6-33

6.5 REFERENCES . . . . . 6-37

7.0 MISSION OPERATIONS . . . . . 7-1

7.1 MISSION CONTROL . . . . . 7-1

7.1.1 Mission Control Center . . . . . 7-1
7.1.2 Emergency Power Building and Backup Facility . . . . . 7-4
7.1.2.1 Emergency power system . . . . . 7-4
7.1.2.2 Emergency lighting system . . . . . 7-6
7.1.2.3 Emergency cooling system . . . . . 7-6
7.1.2.4 Secondary Mission Control Center . . . . . 7-6
7.1.3 Mission Control Functions . . . . . 7-6
7.1.3.1 Unmanned flights . . . . . 7-6
7.1.3.2 Manned flights . . . . . 7-6
7.1.3.3 Dual-vehicle operation . . . . . 7-7
7.1.3.4 Lunar operation . . . . . 7-7
7.1.4 Concluding Remarks . . . . . 7-8

7.2 MISSION PLANNING . . . . . 7-8

7.2.1 Trajectory Design . . . . . 7-8
7.2.2 Consumables . . . . . 7-9
7.2.3 Lunar Landing Site Selection . . . . . 7-9
7.2.4 Documentation . . . . . 7-9

| Section | | Page |
|---|---|---|
| 7.3 | MANNED SPACE FLIGHT NETWORK | 7-9 |
| 7.3.1 | Command Systems | 7-10 |
| 7.3.2 | Telemetry Systems | 7-10 |
| 7.3.3 | Tracking Systems | 7-11 |
| 7.3.4 | Communications Systems | 7-11 |
| 7.4 | RECOVERY OPERATIONS | 7-11 |
| 7.4.1 | Department of Defense Support | 7-12 |
| 7.4.2 | Recovery Posture | 7-12 |
| 7.4.2.1 | Earth orbital missions | 7-12 |
| 7.4.2.2 | Lunar missions | 7-12 |
| 7.4.3 | Equipment and Procedures | 7-17 |
| 7.4.4 | Command Module Postretrieval and Deactivation Procedures | 7-21 |
| 7.4.5 | Concluding Remarks | 7-21 |
| 7.5 | EFFECTS OF WEATHER ON MISSION OPERATIONS | 7-22 |
| 7.5.1 | Prelaunch Operations | 7-22 |
| 7.5.2 | Launch Phase | 7-22 |
| 7.5.3 | Recovery Operations | 7-23 |
| 7.6 | APOLLO FLIGHT DATA | 7-23 |
| 7.6.1 | Operational Data | 7-23 |
| 7.6.2 | Engineering Analysis Data | 7-23 |
| 7.6.3 | Experiment Data | 7-25 |
| 7.7 | MISSION EVALUATION | 7-25 |
| 7.7.1 | Prelaunch Support | 7-25 |
| 7.7.2 | Real-Time Evaluation | 7-25 |
| 7.7.3 | Postflight Evaluation | 7-26 |
| 7.8 | REFERENCES | 7-28 |
| 8.0 | BIOMEDICAL SUMMARY | 8-1 |
| 8.1 | PREFLIGHT MEDICAL PROGRAM | 8-1 |
| 8.1.1 | Flight Crew Health Stabilization | 8-1 |
| 8.1.1.1 | Clinical medicine | 8-1 |
| 8.1.1.2 | Immunology | 8-2 |
| 8.1.1.3 | Exposure prevention | 8-2 |
| 8.1.2 | Preflight Physical Examinations | 8-4 |

| Section | | Page |
|---|---|---|
| 8.2 | MEDICAL OBSERVATIONS | 8-4 |
| 8.2.1 | Cabin Environment and Toxicology | 8-4 |
| 8.2.2 | Radiation | 8-5 |
| 8.2.2.1 | Radiation dose | 8-5 |
| 8.2.2.2 | Visual light flash phenomenon | 8-5 |
| 8.2.3 | Adaptation to Weightlessness | 8-5 |
| 8.2.4 | Work/Rest Cycles | 8-6 |
| 8.2.5 | Crew Illnesses and Medications | 8-8 |
| 8.2.6 | Cardiac Arrhythmias | 8-10 |
| 8.2.7 | Postflight Medical Evaluation | 8-10 |
| 8.3 | BIOMEDICAL EQUIPMENT PERFORMANCE | 8-11 |
| 8.3.1 | Instrumentation | 8-11 |
| 8.3.2 | Medication Packaging | 8-12 |
| 8.4 | FOOD | 8-12 |
| 8.5 | APOLLO LUNAR QUARANTINE PROGRAM | 8-13 |
| 8.5.1 | Quarantine Program Guidelines | 8-13 |
| 8.5.2 | Program Elements | 8-14 |
| 8.5.2.1 | Lunar surface contamination | 8-14 |
| 8.5.2.2 | Lunar sample collection | 8-14 |
| 8.5.2.3 | Inflight contamination control | 8-15 |
| 8.5.2.4 | Return to terrestrial biosphere | 8-15 |
| 8.6 | SPECIAL MEDICAL STUDIES | 8-16 |
| 8.6.1 | Microbiology | 8-16 |
| 8.6.1.1 | Apollo 7 through 12 | 8-17 |
| 8.6.1.2 | Apollo 13 through 17 | 8-17 |
| 8.6.2 | Virology | 8-17 |
| 8.7 | BIOCHARACTERIZATION OF LUNAR MATERIAL | 8-17 |
| 8.7.1 | Microbiology | 8-18 |
| 8.7.1.1 | Virological investigations | 8-18 |
| 8.7.1.2 | Bacteriological and mycological investigations | 8-18 |
| 8.7.2 | Zoology | 8-18 |
| 8.7.3 | Botany | 8-20 |
| 8.8 | REFERENCES | 8-21 |

| Section | | Page |
|---|---|---|
| 9.0 | SPACECRAFT MANUFACTURING AND TESTING | 9-1 |
| 9.1 | COMMAND AND SERVICE MODULE, LAUNCH ESCAPE SYSTEM AND SPACECRAFT/LUNAR MODULE ADAPTER | 9-1 |
| 9.1.1 | Command Module Assembly and Checkout | 9-1 |
| 9.1.1.1 | Heat shield structure | 9-1 |
| 9.1.1.2 | Crew compartment structure | 9-1 |
| 9.1.1.3 | Final operations | 9-4 |
| 9.1.2 | Service Module Assembly and Checkout | 9-4 |
| 9.1.3 | Launch Escape System Assembly and Checkout | 9-6 |
| 9.1.3.1 | Canard assembly | 9-6 |
| 9.1.3.2 | Skirt structural assembly | 9-6 |
| 9.1.3.3 | Tower structural assembly | 9-6 |
| 9.1.3.4 | Boost protective cover | 9-6 |
| 9.1.3.5 | Final assembly | 9-6 |
| 9.1.4 | Spacecraft/Lunar Module Adapter Assembly | 9-6 |
| 9.1.5 | Systems and Vehicle Checkout | 9-8 |
| 9.1.5.1 | Integrated systems checkout | 9-8 |
| 9.1.5.2 | Integrated test | 9-8 |
| 9.1.6 | Facilities | 9-8 |
| 9.1.6.1 | Bonding and test facility | 9-8 |
| 9.1.6.2 | Structure fabrication area | 9-12 |
| 9.1.6.3 | Electronic and electromechanical equipment fabrication and checkout area | 9-12 |
| 9.1.6.4 | Tube fabrication and cleaning facility | 9-12 |
| 9.1.6.5 | Pressure testing facilities | 9-12 |
| 9.1.6.6 | Systems integration and checkout facility | 9-12 |
| 9.1.7 | Equipment | 9-13 |
| 9.1.7.1 | Automatic circuit analyzer | 9-13 |
| 9.1.7.2 | Acceptance checkout equipment for spacecraft | 9-13 |
| 9.2 | LUNAR MODULE | 9-15 |
| 9.2.1 | Ascent Stage Assembly and Checkout | 9-15 |
| 9.2.2 | Descent Stage Assembly and Checkout | 9-15 |
| 9.2.3 | Formal Engineering Acceptance Test | 9-19 |
| 9.2.4 | Facilities | 9-19 |
| 9.2.4.1 | Ascent stage structural/mechanical manufacturing area | 9-20 |
| 9.2.4.2 | Descent stage structural/mechanical manufacturing area | 9-20 |
| 9.2.4.3 | Centralized lunar module assembly, installation, and final acceptance test area | 9-20 |
| 9.2.4.4 | High-pressure test facility (cold-flow) | 9-20 |

Section Page

9.2.5 Equipment . . . . . 9-20
9.2.6 Specialized Support Laboratories . . . . . 9-20
9.2.6.1 Full-mission engineering simulator . . . . . 9-20
9.2.6.2 Flight control integration laboratory . . . . . 9-20
9.2.6.3 Data reduction facility . . . . . 9-22
9.2.6.4 Primary guidance laboratory . . . . . 9-22

10.0 LAUNCH SITE FACILITIES, EQUIPMENT, AND PRELAUNCH OPERATIONS . . . . . 10-1

10.1 WHITE SANDS MISSILE RANGE . . . . . 10-1

10.1.1 Launch Complex . . . . . 10-1
10.1.2 Vehicle Assembly Building . . . . . 10-1
10.1.3 Little Joe II Control System Test Facility . . . . . 10-1
10.1.4 Little Joe II Launcher . . . . . 10-4
10.1.5 Ground Support Equipment . . . . . 10-4
10.1.5.1 Little Joe II . . . . . 10-4
10.1.5.2 Command and service module . . . . . 10-4

10.2 EASTERN TEST RANGE/KENNEDY SPACE CENTER . . . . . 10-5

10.2.1 Saturn IB Launch and Checkout Facilities . . . . . 10-5
10.2.2 Saturn V Launch and Checkout Facilities . . . . . 10-5
10.2.2.1 Vehicle assembly building . . . . . 10-5
10.2.2.2 Mobile launchers . . . . . 10-10
10.2.2.3 Launch sites . . . . . 10-10
10.2.2.4 Mobile service structure . . . . . 10-10
10.2.2.5 Transporter . . . . . 10-10
10.2.2.6 Launch control center . . . . . 10-14
10.2.3 Vehicle Checkout Operations . . . . . 10-14
10.2.3.1 Launch vehicle . . . . . 10-14
10.2.3.2 Lunar module . . . . . 10-14
10.2.3.3 Command and service module . . . . . 10-16
10.2.3.4 Launch pad operations . . . . . 10-17

11.0 LUNAR RECEIVING LABORATORY . . . . . 11-1

11.1 INTRODUCTION . . . . . 11-1

11.2 ORIGINAL CONCEPT . . . . . 11-1

11.3 FACILITIES . . . . . 11-1

11.3.1 Crew Reception Area . . . . . 11-1
11.3.2 Sample Operations Area . . . . . 11-3
11.3.3 Radiation Counting Laboratory . . . . . 11-3
11.3.4 Thin Section Laboratory . . . . . 11-3

Section Page

11.4 OPERATIONS . . . . . 11-3

11.4.1 Preliminary Processing and Examination . . . . . 11-3

11.4.2 Sample Processing . . . . . 11-6

11.4.3 Gas Analysis . . . . . 11-6

11.4.4 Radiation Counting . . . . . 11-11

11.4.5 Biological Testing . . . . . 11-11

11.5 AFTER APOLLO . . . . . 11-11

APPENDIX A - APOLLO FLIGHT DATA . . . . . A-1

APPENDIX B - APOLLO MISSION TYPE DESIGNATIONS . . . . . B-1

APPENDIX C - APOLLO SPACECRAFT WEIGHTS . . . . . C-1

APPENDIX D - MANNED SPACE FLIGHT RECORDS ESTABLISHED DURING APOLLO PROGRAM . . . . . D-1

APPENDIX E - FLIGHT SPACECRAFT CHECKOUT HISTORY . . . . . E-1

APPENDIX F - FLIGHT ANOMALIES . . . . . F-1

# 1.0 INTRODUCTION

The Apollo Program Summary Report is a synopsis of the overall program activities and the technology developed to accomplish lunar exploration. The report is intended, primarily, for the reader who desires a general knowledge of the technical aspects of the Apollo program, but was also edited for comprehension by the lay reader. Much of the information contained herein has been extracted or summarized from Apollo Mission Reports, Apollo Preliminary Science Reports, Apollo Experience Reports, and other applicable documents. However, some of the information has not been published elsewhere. A summary of the flights conducted over an 11-year period is followed by specific aspects of the overall program, including lunar science, vehicle development, flight operations, and biomedical results. Appendixes provide data on each of the Apollo missions (appendix A), mission type designations (appendix B), spacecraft weights (appendix C), records achieved by Apollo crewmen (appendix D), vehicle histories (appendix E), and a listing of anomalous hardware conditions noted during each flight beginning with Apollo 4 (appendix F). No attempt was made to include information pertaining to the management of the Apollo program since this area deserves special treatment. Several other areas were also considered to be beyond the scope of this document, although they were of great importance in accomplishing the established program objectives.

The names of installations and geographical locations used in the report are those that existed during the Apollo program. For example, the Lyndon B. Johnson Space Center is referred to by its former name, the Manned Spacecraft Center, and Cape Canaveral is referred to as Cape Kennedy. Customary units of measurement are used throughout the report except in lunar science discussions. Metric units were used in the lunar science discussions in the Apollo Mission Reports and are also used in this report. All references to miles mean nautical miles rather than statute miles.

# 2.0 FLIGHT PROGRAM

The Apollo program consisted of 33 flights, 11 of which were manned. The 22 unmanned flights were conducted to qualify the launch vehicle and spacecraft for manned space flight. Four of the manned flights were also conducted to man-rate the overall vehicle for lunar exploration. The final seven flights were conducted to explore the lunar environment and surface, providing man with detailed data concerning the moon and its characteristics.

Especially significant during the Apollo program was that no major launch vehicle failure occurred to prevent a mission from being accomplished and only one inflight failure of a spacecraft (Apollo 13) prevented the intended mission from being accomplished. This section of the report provides a summary of each of these flights and discusses some of the more significant findings.

## 2.1 SATURN LAUNCH VEHICLE AND APOLLO SPACECRAFT DEVELOPMENT FLIGHTS

The early development of the Saturn launch vehicle was conducted prior to the final decision that man would attempt to land on the lunar surface. The initial 10 flights provided man with the first insight of the capabilities of large boosters and how such a booster would operate. The primary purposes of these missions were to flight qualify the launch vehicle stages and systems and to determine the compatibility of the launch vehicle/spacecraft combination. A by-product of these flights was data obtained from experiments conducted to extend the knowledge of the ionosphere. Also, three Pegasus satellites were placed in orbit during this part of the flight test program to gather data on meteoroids.

### 2.1.1 Mission SA-1

Apollo mission SA-1 was the first flight of the Saturn I launch vehicle. The mission was unmanned and conducted for research and development purposes. The launch vehicle carried a dummy second stage and a nose cone from a Jupiter missile. The vehicle had no active path guidance, and the flight trajectory was suborbital.

The objectives of the mission included:

a. Flight test of the eight clustered H-1 engines

b. Flight test of the S-I stage clustered propellant tankage structure

c. Flight test of the S-I stage control system

d. Performance measurement of bending and flutter, propellant sloshing, base heating, aerodynamic-engine torque, and airframe aerodynamic heating

The SA-1 vehicle was launched on October 27, 1961, from Launch Complex 34 of the Eastern Test Range, Cape Kennedy, Florida, at 01:00:06 p.m. e.s.t. (15:00:06 G.m.t.). Two launch delays totaling 54 minutes were necessitated because of cloud cover over the launch pad. The lift-off is shown in figure 2-1.

The flight path of SA-1, from lift-off through the cutoff of the inboard engines, was very close to that predicted. The trajectory was slightly higher than predicted because of higher-than-expected accelerations. The trajectory parameters after inboard engine cutoff were proportionally lower than predicted because the cutoff signal occurred 1.61 seconds early. The vehicle reached a maximum altitude of 84.6 miles and a maximum range of 206 miles.

The mission was considered a complete success. The vehicle was instrumented for 505 inflight measurements, of which 485 performed reliably. All primary flight objectives were met.

Figure 2-1.- First Saturn vehicle lift-off.

### 2.1.2 Mission SA-2

Apollo mission SA-2, an unmanned, research and developmental mission, was the second flight of the Saturn I launch vehicle. The vehicle carried a dummy second stage and a Jupiter missile nose cone. The vehicle had no active path guidance, and the flight trajectory was suborbital.

The objectives of the mission were:

a. Prove the first stage propulsion system, structural design, and control system

b. Prove the launch facilities and ground support equipment of Launch Complex 34

c. Confirm the vehicle aerodynamic characteristics in flight

d. Prove the inflight performance of first stage engines and their adequacy to reach design velocity

e. Verify the structural design of the booster airframe

f. Demonstrate the capability of the guidance and control system to perform as required

g. Release 22 900 gallons of water in space as Project High Water 1

Mission SA-2 was launched on April 25, 1962, from Cape Kennedy Launch Complex 34 at 09:00:34 a.m. e.s.t. (14:00:34 G.m.t.). There was a 30-minute launch delay because a ship was in the downrange area.

The flight path of SA-2 agreed closely with the predicted trajectory. However, the trajectory during powered flight was somewhat lower because of lower-than-anticipated accelerations. The destruct signal for detonating the water container of Project High Water 1 was transmitted 162.56 seconds after lift-off when the vehicle was at an altitude of 65.2 miles. Five seconds thereafter, the water formed into a 4.6-mile-diameter ice cloud, which continued to climb to an altitude of 90 miles. The purpose of the Project High Water experiment was to upset the concentration of water vapor in the ionosphere and to study the conditions as equilibrium was regained. Several measurements were made during the experiment. For example, the electron production process rates in and near the E-region were measured. Measurements were also made of the rates of reactions involving water, the hydroxyl ion, diatomic and triatomic oxygen, and hydrogen in the region between 62 and 83.7 miles altitude. The experiment was performed for NASA's Office of Space Sciences and was the first such large-scale test ever made in space.

### 2.1.3 Mission SA-3

Apollo mission SA-3 was the third flight of the Saturn I launch vehicle. Like SA-1 and SA-2, the mission was unmanned and conducted for research and development purposes. This launch vehicle also carried a dummy second stage and a Jupiter missile nose cone. The vehicle had no active path guidance, and the trajectory was suborbital. The payload was Project High Water 2. The objectives were the same as those of mission SA-2.

The SA-3 vehicle was launched on November 16, 1962, from Cape Kennedy Launch Complex 34 at 12:45:02 p.m. e.s.t. (17:45:02 G.m.t.). There was a 45-minute launch delay due to a power failure in the ground support equipment.

The actual flight path of SA-3 was close to the predicted one. A slightly lower acceleration than planned caused the altitude and range to be less than predicted throughout powered flight. However, a longer firing period than planned caused both to be greater after first-stage cutoff. The destruct signal for the container of Project High Water 2 was transmitted at 292 seconds after lift-off when the vehicle was at an altitude of 103.7 miles. The 22 900 gallons of water formed an ice cloud that continued along the flight path of the vehicle, as had the cloud formed by Project High Water 1 on the SA-2 mission. All objectives of the mission were met.

### 2.1.4 Mission SA-4

Apollo mission SA-4 was the fourth launch of the Saturn I launch vehicle. Like the three previous missions, an unmanned, research and developmental vehicle was used. The SA-4 vehicle was equipped with a dummy second stage and a Jupiter missile nose cone. The vehicle had no path guidance, and the trajectory was suborbital.

The objectives of the mission were the same as those of SA-2 and SA-3, with the following two exceptions.

a. Programmed premature cutoff of one of the eight engines of the first stage was used to demonstrate that the vehicle could perform the mission with an engine out.

b. Project High Water payload was not carried on SA-4.

Mission SA-4 was launched on March 28, 1963, from Cape Kennedy Launch Complex 34 at 03:11:55 p.m. e.s.t. (20:11:55 G.m.t.). Three technical delays, totaling 102 minutes, were experienced in the countdown.

The flight path was close to the predicted one. A slightly higher acceleration and an early cutoff signal caused the maximum altitude to be 0.96 mile higher and the range to be 0.13 mile shorter than planned. First-stage engine 5 was cut off at 100.6 seconds after lift-off, 0.22 second earlier than planned. The vehicle responded to the early shutdown as predicted and the flight continued, successfully accomplishing the objective.

### 2.1.5 Mission SA-5

Apollo mission SA-5 was the fifth launch of the Saturn I launch vehicle and the first of a more advanced research and development configuration which had a live second stage and a functional instrument unit for onboard guidance. The launch vehicle had a Jupiter missile nose cone ballasted with sand to simulate the Apollo spacecraft mass characteristics.

SA-5 was an unmanned, research and developmental mission with the following objectives.

a. Flight test of the launch vehicle propulsion, structure, and flight control systems

b. Flight test of the live second stage

c. Flight test of the vehicle instrument unit

d. Separation test of the first and second launch vehicle stages

e. Checkout of Launch Complex 37B

f. Recovery of movie cameras and film showing oxidizer sloshing, stage separation and other performance characteristics

g. Flight test of the S-I stage fins

h. Demonstration test of liquid hydrogen venting in the second stage

i. Functional test of the function of the eight holddown arms on the launcher

j. Functional test of the stage separation timer

k. Operational test of a passenger ST-124 stabilized platform in the guidance unit

l. Orbiting of a payload weighing 37 700 pounds

Mission SA-5 was launched on January 29, 1964, from Cape Kennedy Launch Complex 37B at 11:25:01 a.m. e.s.t. (16:25:01 G.m.t.). Seventy-three minutes of launch delays during the countdown were necessitated because of interference on the C-band radar and the command destruct frequencies.

The flight path of SA-5 was close to the predicted one. However, at outboard engine cutoff of the S-I stage, the cross-range deviation was 1 mile to the left of the planned point. By the end of the S-IV stage firing, the deviation had increased to 13.2 miles. The 37 700-pound payload of nose cone, including 11 500 pounds of sand, was placed into an orbit with a perigee of 162.6 miles and an apogee of 478.3 miles. The flight produced several firsts for the Saturn I vehicle. It marked the first flight of the improved H-1 engines in the S-I stage. The new model produced 188 000 pounds of thrust. Also, several cameras that recorded data during flight were ejected and recovered. Of the eight cameras used, seven were recovered. An onboard television camera also transmitted data during the flight. The second or S-IV stage operated as planned, as did the instrument unit.

### 2.1.6 Mission A-101

Apollo mission A-101 was the first of two flights of Apollo boilerplate spacecraft to demonstrate the compatibility of the Apollo spacecraft with the Saturn I launch vehicle in a launch environment similar to that expected for Apollo Saturn V orbital flights. Another important objective of this mission was to demonstrate the primary mode of launch escape tower jettison using the escape tower jettison motor.

In addition to the boilerplate command and service module, the spacecraft included a production-type launch escape system and a service module/launch vehicle adapter. Also, the spacecraft was equipped with instrumentation to obtain flight data for engineering analysis and evaluation. The assembly was designated BP-13. The launch vehicle (SA-6) consisted of an S-I first stage, an S-IV second stage, and an instrument unit. Figure 2-2 shows the vehicle undergoing tests on the launch pad approximately 1 month before launch.

The space vehicle was launched into earth orbit on May 28, 1964, at 12:07:00 p.m. e.s.t. (17:07:00 G.m.t.) from Cape Kennedy Launch Complex 37B. The spacecraft, S-IV stage, and instrument unit were inserted into orbit as a single unit.

The trajectory provided the launch environment required for the spacecraft mission, and all spacecraft systems fulfilled their specified functions throughout the countdown and flight test. Telemetry reception was continuous during launch and exit except for about 3 seconds during launch vehicle staging. Data were obtained by telemetry until the batteries were expended in the fourth orbital pass.

Aerodynamic heating produced a maximum truss member bond-line temperature on the launch escape tower that was less than 20 percent of the design limit (550° F). Postflight examination of strain gage, pressure, and acceleration data indicated that the spacecraft structure was adequate for the flight environment encountered.

The launch vehicle flight performance was acceptable in meeting the required spacecraft test objectives and all spacecraft objectives were satisfactorily fulfilled before insertion. The network maintained radar skin tracking until spacecraft entry over the Pacific Ocean near Canton Island during the 54th orbital pass. The spacecraft was not designed to survive entry and was not recovered.

### 2.1.7 Mission A-102

Mission A-102 was the second of the two boilerplate spacecraft flights conducted to demonstrate the compatibility of the Apollo spacecraft with the Saturn I launch vehicle. The alternate mode of launch escape tower jettison was also to be demonstrated using the launch escape motor and pitch control motor. The launch trajectory for this mission was similar to that of mission A-101.

The spacecraft consisted of a boilerplate command and service module, a launch escape system, and a service module/launch vehicle adapter (BP-15). The instrumentation was similar to that of the spacecraft for the A-101 mission. A significant difference, however, was that one of the four simulated reaction control system assemblies on the service module was instrumented to provide data on the aerodynamic heating and vibration levels experienced by the assemblies during launch. The launch vehicle (SA-7) consisted of an S-I first stage, an S-IV second stage, and an instrument unit.

Figure 2-2.- Saturn vehicle SA-6 undergoing tests on Launch Complex 37B.

The spacecraft was launched into earth orbit on September 18, 1964, at 11:22:43 a.m. e.s.t. (16:22:43 G.m.t.) from Cape Kennedy Launch Complex 37B. The velocity, altitude, and flight-path angle at the time of S-I stage cutoff were slightly higher than planned. At S-IV stage cutoff, the altitude was slightly lower and the velocity was slightly higher than planned, resulting in a more elliptical orbit than planned. The S-IV, instrument unit, and the attached spacecraft (without the launch escape system which was jettisoned) were inserted into orbit as a single unit.

The instrumentation system was successful in determining the launch and exit environment, and telemetry reception of the data was continuous through launch and exit except for a short period during vehicle staging. The measurements indicated that the spacecraft performed satisfactorily in the launch environment.

The launch-heating environment of the spacecraft was similar to that encountered on the A-101 mission. Peak values at most points for the two flights were approximately equal: however, the influence of surface irregularities and circumferential variations on the amount of heating experienced was somewhat different for the two flights because of differences in trajectory and angle of attack. The command and service module heating rates were within the predicted range. The heat protection equipment on the launch escape system was subjected to temperatures much lower than the design limits, which were established on the basis of an aborted mission.

Jettisoning of the launch escape tower by the alternate mode was successful. Positive ignition of the pitch control motor could not be determined; however, the general trajectory indicated that the motor operated properly. The launch escape motor, together with the pitch control motor, carried the tower structure safely out of the path of the spacecraft.

The command module instrumentation compartment differential pressure reached a maximum of 13.3 psi, but vented rapidly after launch escape system separation. A 1.8g, peak-to-peak, 10-hertz vibration was noted during holddown. Other vibration modes were similar to those experienced during the A-101 mission. The measured vibration levels of the instrumented reaction control system assembly were above the design limit.

Radar skin tracking of the spacecraft was continued by the network until it entered over the Indian Ocean during the 59th revolution. No provisions had been made for recovery of the spacecraft and it disintegrated during entry. All spacecraft test objectives for the mission were satisfactorily fulfilled; launch vehicle performance was also satisfactory.

### 2.1.8 Mission A-103

Mission A-103 was the eighth unmanned Saturn flight. It was the initial vehicle in the operational series of Saturn I launch vehicles and the third to carry an Apollo boilerplate payload. The vehicle also orbited the first of three meteoroid technology satellites, Pegasus A (fig. 2-3).

Of 12 flight objectives assigned, two were concerned with the operation of the Pegasus satellite, eight with launch vehicle systems performance, one with jettisoning the launch escape system, and one with separation of the boilerplate spacecraft. The satellite objectives were (1) demonstration of the functional operations of the mechanical, structural, and electronic systems and (2) evaluation of meteoroid data sampling in near-earth orbit. Since the launch trajectory was designed to insert the Pegasus satellite into the proper orbit, it differed substantially from the Apollo/Saturn V trajectory used in missions A-101 and A-102.

The launch vehicle (SA-9) consisted of an S-I first stage, an S-IV second stage, and an instrument unit. The spacecraft consisted of a boilerplate command and service module, a launch escape system, and a service module/launch vehicle adapter (BP-16). The service module enclosed the Pegasus satellite. The orbital configuration consisted of the satellite mounted on the adapter, which remained attached to the instrument unit and the expended S-IV stage. The launch escape system was jettisoned during launch and the command module was jettisoned after orbital insertion. The satellite weighed approximately 3080 pounds and was 208 inches high, 84 inches wide, and 95 inches deep. The width of the deployed wings was 96 feet.

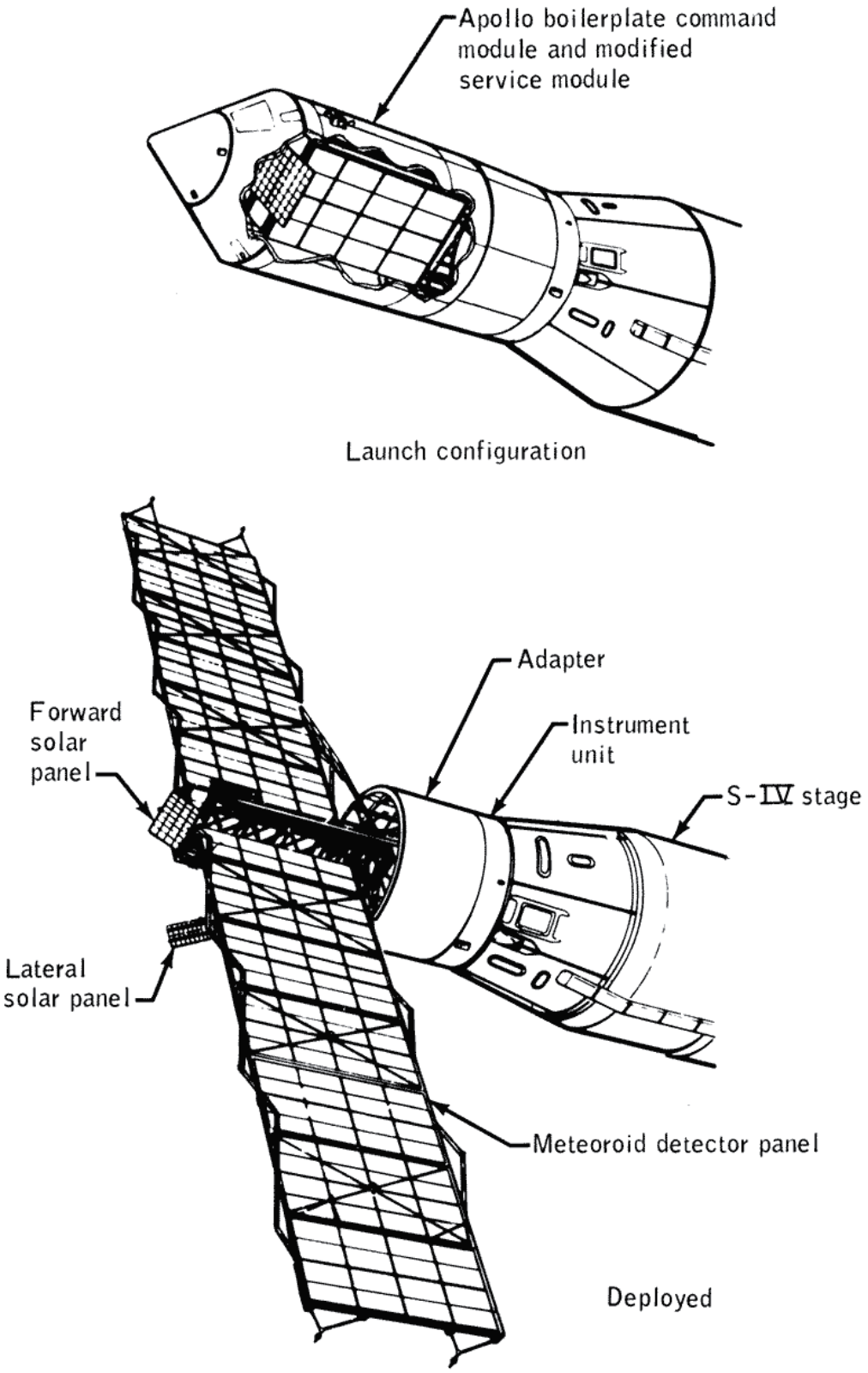


Figure 2-3.- Deployment of Pegasus satellite.

The vehicle was launched from Cape Kennedy Launch Complex 37B at 09:37:03 a.m. e.s.t. (14:37:03 G.m.t.) on February 16, 1965. A hold of 1 hour and 7 minutes was caused by a power failure in the Eastern Test Range flight safety computer. A built-in hold of 30 minutes was also used to discharge and recharge a battery in the Pegasus satellite as a check that it was functioning properly.

The launch was normal and the payload was inserted into orbit approximately 10.5 minutes after launch. The total mass placed in orbit was 33 895 pounds. The perigee was 307.8 miles, the apogee was 461.9 miles, and the orbital inclination was 31.76°. The Pegasus satellite had a period of 97.1 minutes.

The trajectory and space-fixed velocity were very nearly as planned. The Apollo shroud separated from the Pegasus satellite about 804 seconds after lift-off and deployment of two meteoroid detection panel wings of the Pegasus satellite commenced about 1 minute later. The predicted useful lifetime of Pegasus A in orbit was 1188 days. The satellite was commanded off on August 29, 1968. Although minor malfunctions occurred in both the launch vehicle and the Pegasus A satellite, mission A-103 was a success in that all objectives were met.

### 2.1.9 Mission A-104

Mission A-104 was the ninth test flight of the Saturn I. This mission was the second flight in the Saturn I operational series and the fourth vehicle to carry an Apollo boilerplate spacecraft. The vehicle also launched the Pegasus B meteoroid technology satellite. The two primary mission objectives were (1) evaluation of meteoroid data sampling in near-earth orbit and (2) demonstration of the launch vehicle iterative guidance mode and evaluation of system accuracy. The launch trajectory was similar to that of mission A-103.

The Saturn launch vehicle (SA-8) and payload were similar to those of mission A-103 except that a single reaction control engine assembly was mounted on the boilerplate service module (BP-26) and the assembly was instrumented to acquire additional data on launch environment temperatures. This assembly also differed from the one on the A-101 mission in that two of the four engines were of a prototype configuration instead of all engines being simulated. Pegasus B weighed approximately 3080 pounds and had the same dimensions as Pegasus A.

Mission A-104 was launched from Cape Kennedy Launch Complex 37B at 02:35:01 a.m. e.s.t. (07:35:01 G.m.t.) on May 25, 1965, the first nighttime launch in the Saturn I series (fig. 2-4). A built-in 35-minute hold was used to ensure that launch time coincided with the opening of the launch window.

The launch was normal and the payload was inserted into orbit approximately 10.6 minutes after lift-off. The total mass placed in orbit, including the spacecraft, Pegasus B, adapter, instrument unit, and S-IV stage, was 34 113 pounds. The perigee and apogee were 314.0 and 464.1 miles, respectively; the orbital inclination was 31.78°.

The actual trajectory was close to the one predicted, and the spacecraft was separated 806 seconds after lift-off. The deployment of the Pegasus B wings began about 1 minute later. The predicted orbital lifetime of Pegasus B was 1220 days. The satellite instrumentation and beacons were commanded off on August 29, 1968. Several minor malfunctions occurred in the S-I stage propulsion system; however, all mission objectives were successfully achieved.

### 2.1.10 Mission A-105

Mission A-105, the third flight of an operational Saturn I, was the last in the series of Saturn I flights. The payload consisted of an Apollo boilerplate spacecraft (BP-9A) which served as a shroud for the third Pegasus meteoroid technology satellite, Pegasus C. The two primary flight objectives were (1) the collection and evaluation of meteoroid data in near-earth orbit and (2) the continued demonstration of the launch vehicle iterative guidance mode and evaluation of system accuracy.

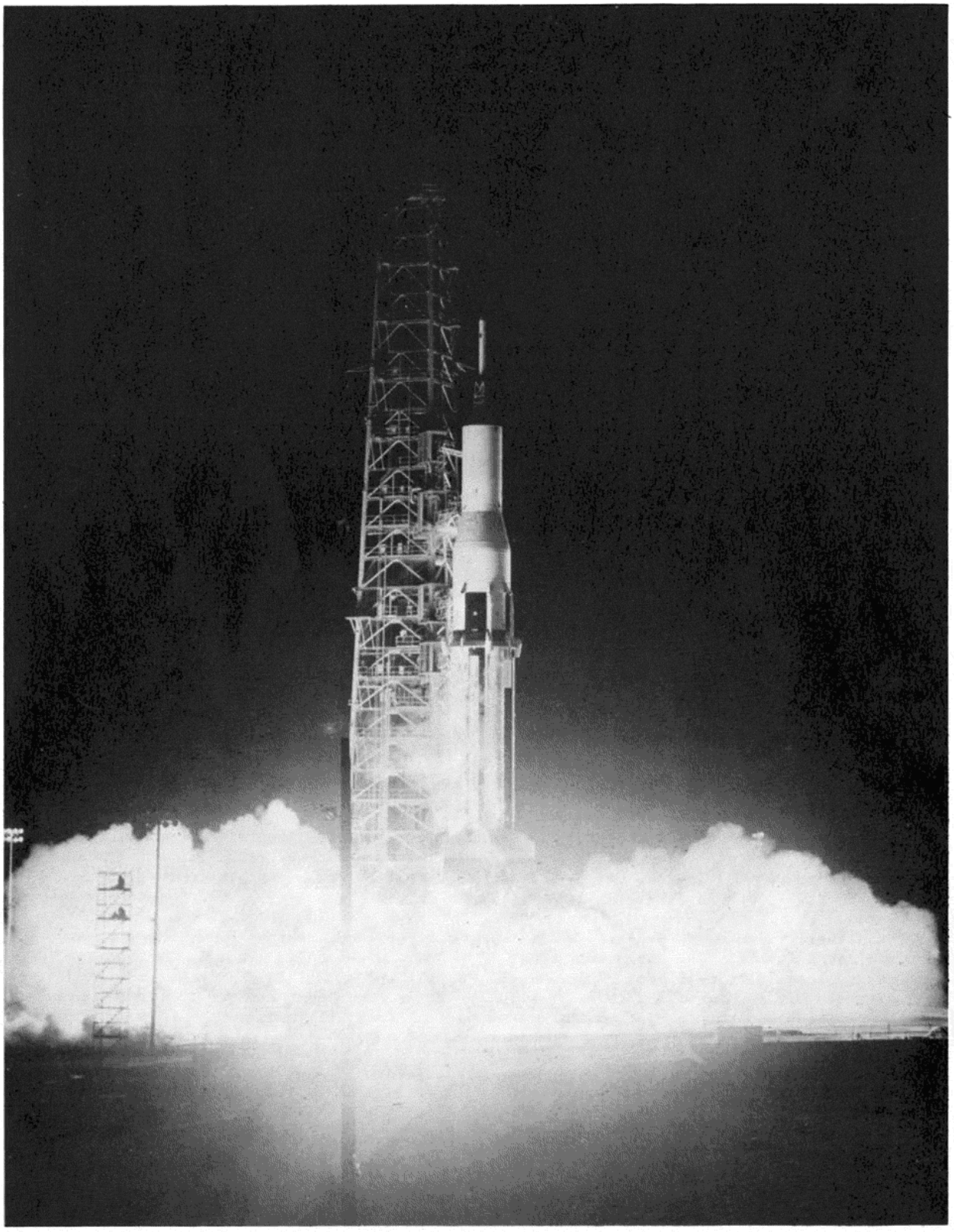

Figure 2-4.- Space vehicle lift-off for mission A-104.

The Saturn launch vehicle (SA-10) was similar to those of missions A-103 and A-104. As on the previous mission, the boilerplate service module was equipped with a test installation of a reaction control engine package. Pegasus C weighed 3138.6 pounds and had the same dimensions as its predecessors.

Mission A-105 was launched from Cape Kennedy Launch Complex 37B at 08:00:00 a.m. e.s.t. (13:00:00 G.m.t.) on July 30, 1965. A planned 30-minute hold ensured that launch time coincided with the opening of the Pegasus launch window. The launch was normal and the payload was inserted into orbit approximately 10.7 minutes after lift-off. The total mass placed in orbit, including the spacecraft, Pegasus C, adapter, instrument unit, and S-IV stage, was 34 438 pounds.

The spacecraft was separated 812 seconds after lift-off. The separation and ejection system operated as planned. The two meteoroid detection panel wings of the satellite were deployed from their folded position 40 seconds after command initiation at 872 seconds.

The predicted useful lifetime of the satellite (720 days) was exceeded, and the beacons and telemetry transmitters were commanded off on August 29, 1968. Pegasus C entered the earth atmosphere on August 4, 1969. All primary and secondary objectives were attained.

Details of the three Pegasus flights are contained in references 2-1, 2-2 and 2-3.

## 2.2 APOLLO SPACECRAFT ABORT TESTS

The Apollo spacecraft abort tests consisted of six flights to demonstrate the adequacy of the Apollo launch escape system and to verify the performance of the command module earth landing system. These flights were launched from Complex 36 at White Sands Missile Range, New Mexico, which is approximately 4000 feet above mean sea level. Two of the tests were conducted with the launch escape system motors being ignited at ground level, while the remaining tests were conducted using the Little Joe II launch vehicle to boost the spacecraft to various points in the Saturn launch trajectory for abort initiation. A significant event in this series of flights was an unplanned failure of a launch vehicle resulting in an actual abort situation in which all spacecraft systems operated satisfactorily.

### 2.2.1 Pad Abort Test 1

Apollo Pad Abort Test 1 was an unmanned flight using the launch escape system to demonstrate the capability of the Apollo spacecraft to abort from the launch pad and thus provide crew safety. Of the six first-order test objectives assigned, those of primary importance were to (1) determine the aerodynamic stability characteristics of the Apollo escape configuration during a pad abort, (2) demonstrate the capability of the escape system to propel a command module a safe distance from a launch vehicle during a pad abort, and (3) demonstrate the earth landing timing sequence and proper operation of the parachute system.

The test vehicle consisted of a production launch escape system in combination with a boilerplate command module (BP-6), the first Apollo boilerplate spacecraft to be flown (fig. 2-5). Since the command module was not representative of the actual spacecraft, no instrumentation was provided to determine structural loads. Measurements of such characteristics as vehicle accelerations, angle of attack, Mach number, and dynamic pressure allowed determination of inflight loads resulting from the external environment or vehicle dynamics. The command module was mounted in a vertical position on three bearing points of a supporting structure attached to a concrete pad.

The test was initiated on November 7, 1963, at 09:00:01 a.m. m.s.t. (16:00:01 G.m.t.) by transmitting a ground commanded abort signal to the command module. The signal activated the abort relay in the launch escape system sequencer, which in turn sent a signal to ignite the launch escape and pitch control motors. These motors ignited almost simultaneously and lifted the command module along a planned trajectory. The launch escape tower was separated about 15 seconds after engine ignition and followed a ballistic trajectory. The command module made a normal parachute descent at a velocity of 24 feet per second. Landing of the command module occurred at 165.1 seconds.

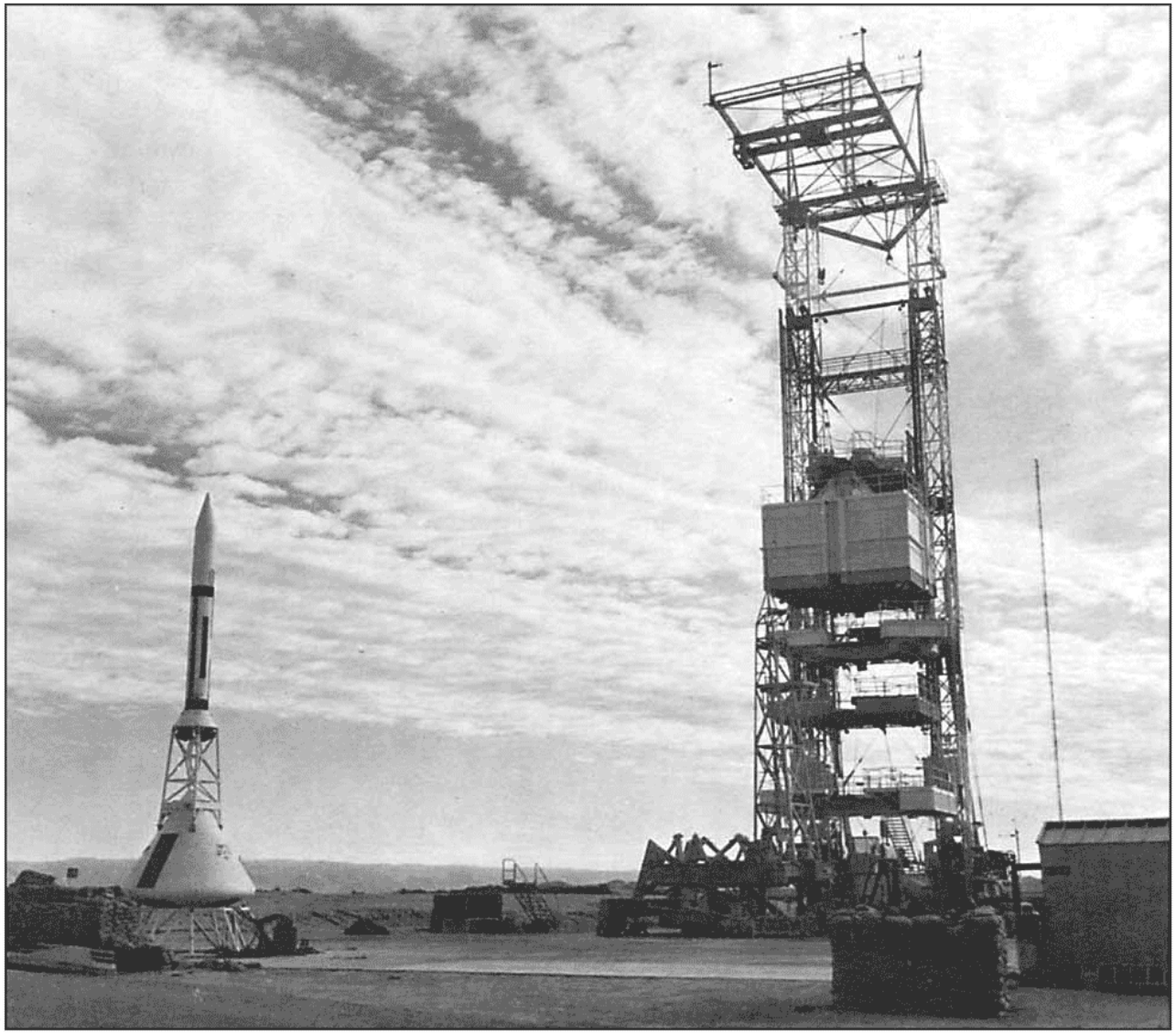

Figure 2-5.- Pad abort test of launch escape vehicle.

The vehicle exceeded the Apollo minimum altitude and range requirements for a pad abort by 970 feet and 1525 feet, respectively. Although the vehicle stability was less than predicted during the powered phase of flight, all objectives of the flight were satisfied.

### 2.2.2 Mission A-001

Mission A-001 was the second in the series of tests conducted to demonstrate that the launch escape system could safely remove the command module under critical abort conditions. Unlike Pad Abort Test 1, in which the launch escape system was ignited at ground level, this mission was flown to demonstrate the capability of the escape system to propel the command module safely away from a launch vehicle while in the high-dynamic-pressure (transonic) region of the Saturn trajectory.

The launch vehicle was the second in the series of Little Joe II vehicles, which had been developed to accomplish early and economical testing of the launch escape system. The Little Joe II was propelled by seven solid-propellant rocket motors - one Algol sustainer motor, which provided thrust for about 42 seconds, and six Recruit motors, which burned out approximately 1.5 seconds after ignition. The spacecraft consisted of a launch escape system and a boilerplate command and service module (BP-12).

Unacceptable wind conditions had forced a 24-hour postponement of the launch, but the vehicle was successfully launched (fig. 2-6) on May 13, 1964, at 05:59:59.7 a.m. m.s.t. (12:59:59.7 G.m.t). A ground commanded abort signal terminated thrust of the launch vehicle (by rupturing the Algol motor casing), ignited the launch escape and pitch control motors, and separated the command module from the service module. Some structural damage was incurred by the command module aft heat shield because of recontact with the booster at thrust termination. At approximately 44 seconds, the tower jettison motor was ignited and satisfactorily separated the launch escape tower from the command module.

The earth landing sequence was normal until a riser for one of the three main parachutes broke as a result of its rubbing against the structure on the command module upper deck. The parachute separated; however, the command module, supported by the two remaining parachutes, descended at rates of 30 to 26 feet per second instead of the predicted 24 feet per second with three parachutes. The command module landed 22 400 feet down range at 350.3 seconds after attaining an altitude of 29 772 feet above mean sea level. Except for the parachute failure, all test objectives were satisfied.

### 2.2.3 Mission A-002

Mission A-002 was the third in the series of abort tests to demonstrate that the launch escape system would perform satisfactorily under selected critical abort conditions. The main objective of this mission was to demonstrate the abort capability of the launch escape vehicle in the maximum dynamic pressure region of the Saturn trajectory with conditions approximating the altitude limit at which the Saturn emergency detection system would signal an abort.

The launch vehicle was the third in the Little Joe II series. This vehicle differed from the previous two in that flight controls and instrumentation were incorporated, and the vehicle was powered by two Algol and four Recruit rocket motors. The launch escape system was also changed from previous configurations in that canards (forward control surfaces used to orient and stabilize the escape vehicle in the entry attitude) and a command module boost protective cover were incorporated. The Apollo spacecraft was simulated by a boilerplate command and service module (BP-23). The earth landing system was modified from the previous configuration by the installation of modified dual-drogue parachutes instead of a single-drogue parachute.

The A-002 vehicle was launched on December 8, 1964, at 08:00:00 a.m. m.s.t. (15:00:00 G.m.t.) by igniting all launch vehicle motors simultaneously. Conditions at abort initiation were selected from Saturn boost trajectories, and a nominal test point was used for the maximum dynamic pressure region. A pitchup maneuver and the abort were initiated by using a real-time plot of the dynamic pressure versus Mach number. However, an improper constant was used in the meteorological data input to the real-time data system, resulting in the pitchup maneuver being initiated 2.4 seconds early. Although the planned test point was not achieved, the early pitchup caused a higher maximum dynamic pressure than the design value.

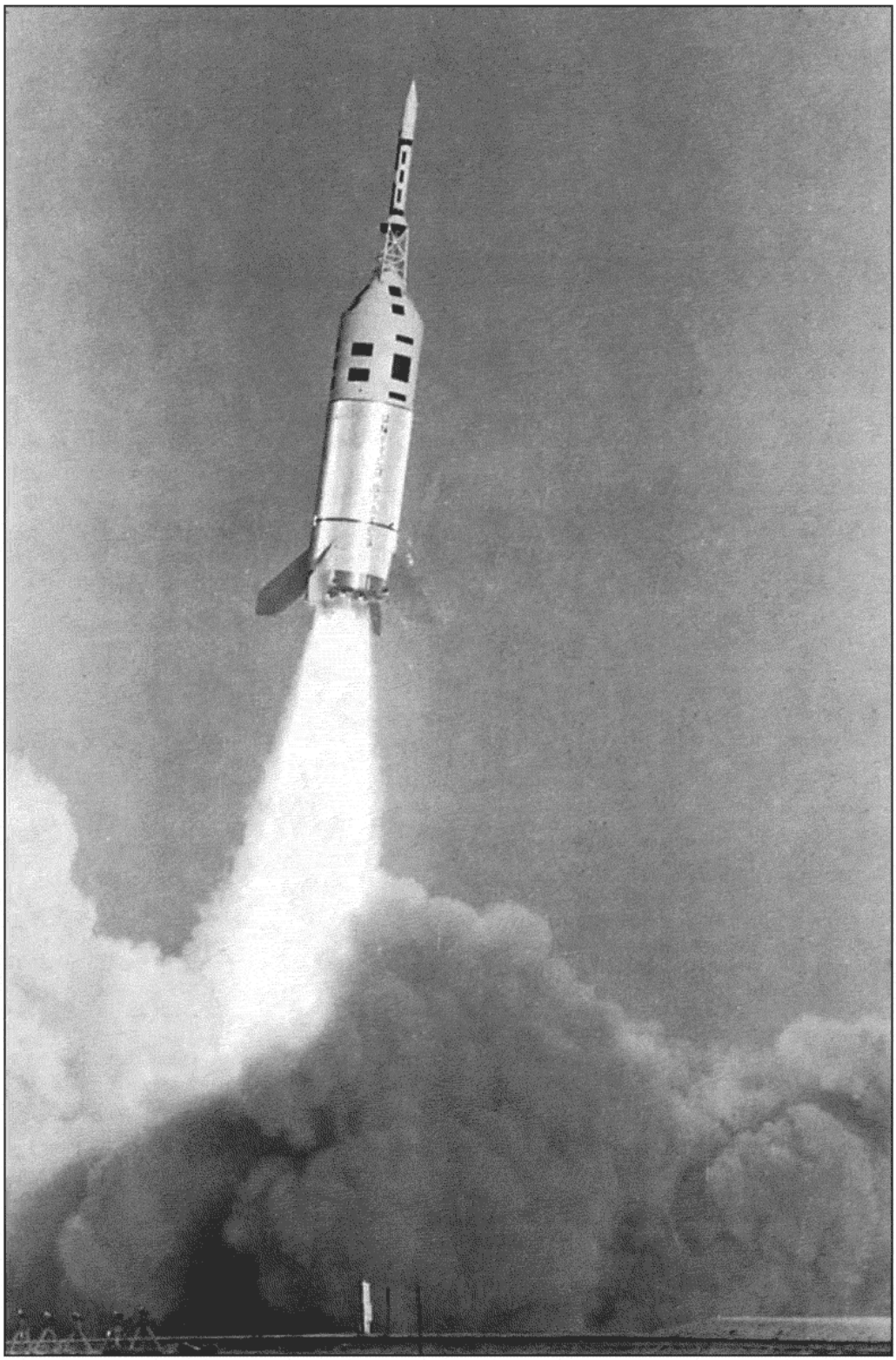

Figure 2-6.- Vehicle lift-off for mission A-001.

Canard deployment took place as expected 11.1 seconds after abort initiation. The launch escape vehicle tumbled four times before stabilizing with the aft heat shield forward. During the first turnaround, the soft portion of the boost protective cover was torn away from the command module. Maximum altitude attained by the launch escape vehicle was 50 360 feet above mean sea level.

Baroswitches initiated the earth landing sequence at an altitude of approximately 23 500 feet above mean sea level. All parachutes deployed properly and the command module, supported by the three main parachutes, descended at the planned rate of about 24 feet per second to an earth landing 32 800 feet down range.

The abort conditions obtained were more than adequate in verifying the abort capability in the maximum dynamic pressure region. Only one test objective was not achieved; the boost protective cover was structurally inadequate for the environment experienced during this mission.

### 2.2.4 Mission A-003

Apollo mission A-003 was the fourth mission to demonstrate the abort capability of the Apollo launch escape system. The purpose of this flight was to demonstrate launch escape vehicle performance at an altitude approximating the upper limit for the canard subsystem.

The launch vehicle was similar to the one used for mission A-002 except that the propulsion system consisted of six Algol motors. The unmanned flight test vehicle consisted of an Apollo boilerplate command and service module (BP-22) and a launch escape system similar to the one used on the previous mission. The command module earth landing system configuration was refined to be more nearly like that of the planned production system, and a forward heat shield jettisoning system was provided.

The test vehicle was launched on May 19, 1965, at 06:01:04 a.m. m.s.t. (13:01:04 G.m.t.). Within 2.5 seconds after lift-off, a launch vehicle malfunction caused the vehicle to go out of control. The resulting roll rate caused the launch vehicle to break up before second-stage ignition, and a low-altitude spacecraft abort was initiated instead of the planned high-altitude abort. The launch escape system canard surfaces deployed and survived the severe environment. The high roll rates (approximately 260° per second at the time of canard deployment) induced by the launch vehicle malfunction stabilized the launch escape vehicle in a tower-forward attitude, which overcame the destabilizing effect of the canards. Postflight simulations verified the ineffectiveness of the canards at the high roll rate, but showed that the canards would be effective at the 20° per second roll rate limit of the Saturn emergency detection system.

All spacecraft systems operated satisfactorily. The command module forward heat shield was protected by the hard portion of the boost protective cover and was jettisoned satisfactorily in an apex-forward attitude at low altitude. The soft portion of the boost protective cover remained intact until tower jettison. At tower jettison, part of the cover stayed with the command module for a short time although the rest of the cover moved away with the tower. The hard portion of the boost protective cover remained intact until ground impact. Both drogue parachutes inflated, even under the severe conditions that existed; that is, command module apex forward and rolling. The command module was effectively stabilized and oriented for deployment of the main parachutes.

Because of the early launch vehicle breakup, the desired altitude of 120 000 feet was not achieved. However, the spacecraft did demonstrate a successful low-altitude (12 400 ft) abort from a rapidly rolling (approximately 335° per second) launch vehicle. The Mach number, dynamic pressure, and altitude at the time of abort were similar to Saturn IB or Saturn V launch trajectory conditions.

### 2.2.5 Pad Abort Test 2

Apollo Pad Abort Test 2 was the fifth of six unmanned Apollo missions that flight tested the capability of the launch escape system to provide for safe recovery of Apollo crews under critical abort conditions. This flight was the second test of the launch escape system with the abort initiated from the launch pad.

The launch escape system included qualified launch escape and pitch control motors and was equipped with canards to orient the vehicle aft heat shield forward prior to tower jettison and parachute deployment. A boost protective cover was also provided. The spacecraft was BP-23A, a boilerplate command module that had been used on mission A-002 and refurbished to more nearly simulate a Block-I-type command module in mass and other characteristics. The earth landing system was similar to the one used in mission A-003.

The test flight was conducted on June 29, 1965. The vehicle was lifted from Launch Complex 36 by the launch escape motor at 06:00:01 a.m. m.s.t. (13:00:01 G.m.t.). The launch escape and pitch control motors ignited simultaneously, placing the test vehicle into the planned initial trajectory. A moderate roll rate developed at lift-off, which was due to the aerodynamic asymmetry of the vehicle configuration; however, the roll rate did not affect the success of the test.

The canard surfaces deployed and turned the vehicle to the desired orientation for drogue parachute deployment. During the turnaround maneuver, the launch escape tower and forward heat shield were jettisoned as planned. The boost protective cover, which was attached to the launch escape system, protected the conical surface of the command module and remained intact through a canard-induced pitch maneuver. At tower jettison, the soft boost protective cover, as expected, collapsed because of differential pressure during removal from the command module. No recontact or interference between the major components was evident during tower jettison and parachute deployment.

Although one of the pilot parachute steel cable risers was kinked, the earth landing system functioned properly. The drogue parachutes inflated and stabilized the command module for pilot and main parachute deployment, and the rate of descent while on the main parachutes was satisfactory. The maximum altitude achieved was 9258 feet above mean sea level, approximately 650 feet higher than predicted. The command module landed about 7600 feet from the launch site, some 2000 feet farther than planned.

Four glass samples had been mounted on the command module in the general area planned for the rendezvous and crew windows. No soot appeared on the samples, but an oily film was found on the exposed surfaces of three of the four samples. This film, however, was not expected to cause excessive degradation to the horizon scan or ground orientation ability during an abort. The test was highly successful and all planned objectives were fulfilled.

### 2.2.6 Mission A-004

Mission A-004 was the final test of the Apollo launch escape vehicle and the first flight of a Block I production-type spacecraft. The mission was unmanned and was conducted to demonstrate that (1) the launch escape vehicle would satisfactorily orient and stabilize itself in the proper attitude after being subjected to a high rate of tumbling during the powered phase of an abort and (2) the escape vehicle would maintain its structural integrity under test conditions in which the command module structure was loaded to the design limit.

The launch vehicle was the fifth and final Little Joe II flown. The propulsion system consisted of four Algol and five Recruit rocket motors. The attitude control system was similar to the one used on mission A-003 except that the reaction control system was deleted and the vehicle was provided with the capability of responding to a radio-transmitted pitchup command. The pitchup maneuver was required to help initiate tumbling of the launch escape vehicle. The spacecraft for this mission consisted of a modified Block I command and service module and a modified Block I launch escape system (airframe 002). The center of gravity and thrust vector were changed to assure that power-on tumbling would be attained after abort initiation. The earth landing system was essentially the same as that used during Pad Abort Test 2.

The vehicle was launched on January 20, 1966, at 08:17:01 a.m. m.s.t. (15:17:01 G.m.t.) after several postponements due to technical difficulties and adverse weather conditions. The pitchup maneuver was commanded from the ground when telemetry showed that the desired altitude and velocity conditions had been reached. The planned abort was automatically initiated 2.9 seconds later. The launch escape vehicle tumbled immediately after abort initiation. Pitch and yaw rates reached peak values of 160° per second, and roll rates reached a peak of minus 70° per second. The launch escape system canard surfaces deployed at the proper time and stabilized the

command module with the aft heat shield forward after the escape vehicle had tumbled about four times. Tower jettison and operation of the earth landing systems were normal, and the command module landed about 113 620 feet form the launch pad after having reached a maximum altitude of 78 180 feet above mean sea level.

All systems performed satisfactorily, and the dynamic loads and structural response values were within the design limits and predicted values. Although a structural loading value of primary interest was not achieved (local differential pressure between the interior and exterior of the command module wall), all test objectives were satisfied.

## 2.3 UNMANNED APOLLO/SATURN FLIGHTS

The six flights of the unmanned Apollo/Saturn series were conducted to qualify all launch vehicle systems (Saturn IB and Saturn V) and all spacecraft systems (command and service module and lunar module) for manned flight. Each flight built on the knowledge and experience gained from the previous flights, with the last two flights serving as final flight verification of all systems. In addition, these flights provided the final verification of the ground support hardware, launch checkout and countdown procedures, the communications network (Manned Space Flight Network), and the ground support personnel.

The first planned manned flight was originally scheduled for launch after the third unmanned flight of this series; however, the first manned flight was not accomplished until six unmanned flights had been completed.

### 2.3.1 Mission AS-201

Mission AS-201 was the second flight test of a production-type Apollo Block I spacecraft (airframe 009) and was the first flight test of the Saturn IB launch vehicle. Objectives of this unmanned suborbital flight were to demonstrate the compatibility and structural integrity of the spacecraft/Saturn IB combination and to evaluate the spacecraft heat shield performance during a high-heat-rate entry.

The Saturn IB consisted of two stages, an S-IB first stage and an S-IVB second stage with an instrument unit. The spacecraft consisted of a command module, a service module, an adapter, and a launch escape system. The vehicle is shown in figure 2-7 as it was undergoing the countdown demonstration test approximately 3 weeks before launch. The spacecraft differed from the standard Block I configuration in several respects. Fuel cells, crew equipment, suit loop, cabin postlanding ventilation system, cryogenic storage tanks, and the guidance and navigation system were not installed. In addition, a partial emergency detection system was flown, and the radiators for the environmental control system and the electrical power system were inoperative.

Mission AS-201 was launched from Cape Kennedy Launch Complex 34 at 11:12:01 a.m. e.s.t. (16:12:01 G.m.t.), February 26, 1966. The command module landed safely in the primary landing area near Ascension Island approximately 37 minutes later and was recovered as planned. The sequence of mission events is given in reference 2-4.

The launch was normal except that S-IVB cutoff and S-IVB/command and service module separation occurred 10 seconds later than predicted. Also, because of the delay in S-IVB cutoff, the mission control programmer was activated 10 seconds later than planned, and subsequent event times reflected this 10-second delay. In general, all spacecraft systems performed as expected except for the service module reaction control system. An oxidizer isolation valve failed to open, preventing operation of one of the service module reaction control system engine assemblies. Also, a negative yaw engine in another assembly was inoperative. However, the system successfully provided spacecraft attitude and rate control, adequate translation for the S-IVB/command and service module separation, and ullage for the two service propulsion system maneuvers.

The AS-201 mission was the first flight test of the service propulsion system. Although the reaction control system failure resulted in only 25 to 45 percent of the ullage velocity increment expected, the first ignition of the service propulsion system was successful and performance was near normal for the first 80 seconds of the 184-second firing. However, at engine cutoff, the

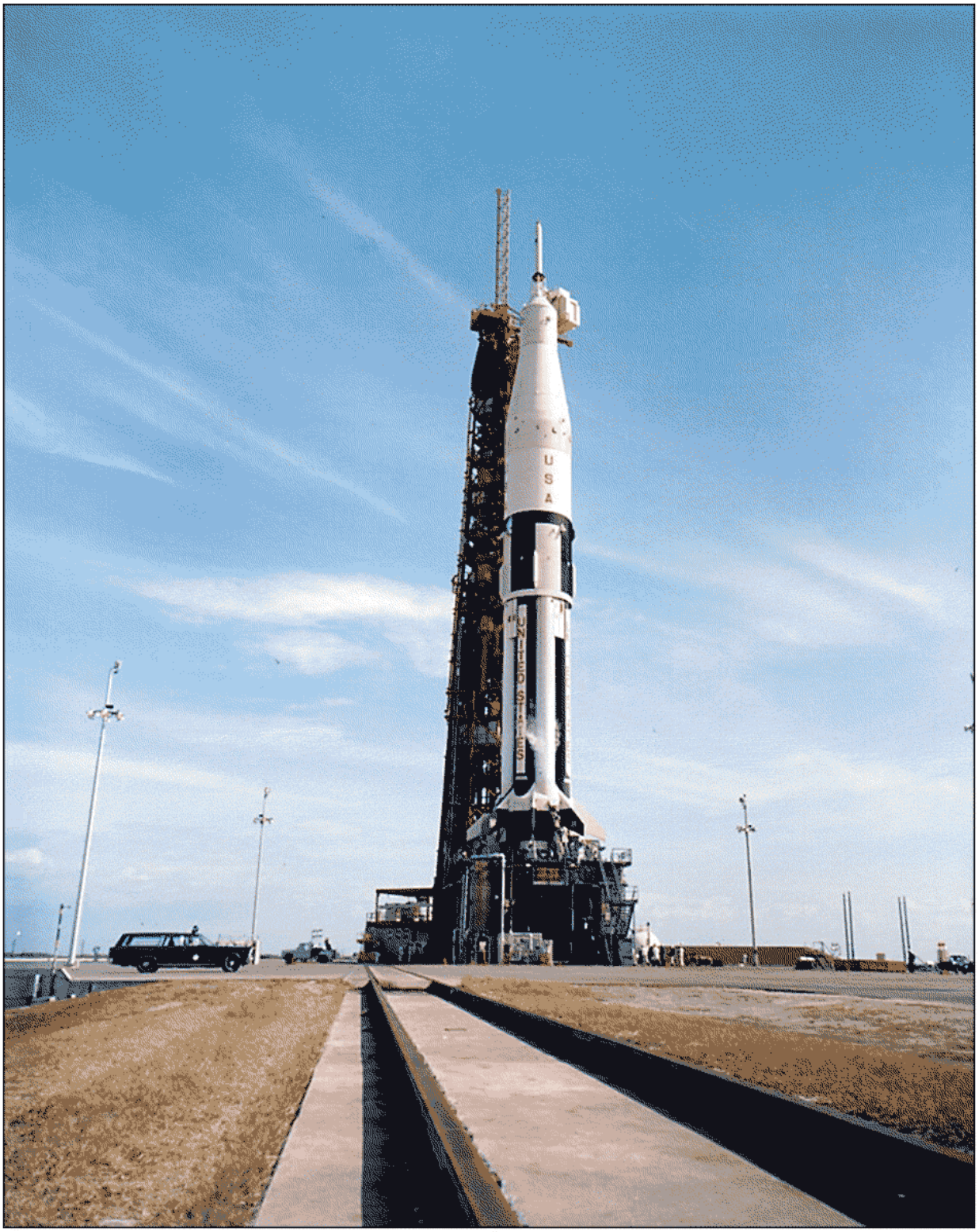


Figure 2-7.- Apollo/Saturn vehicle undergoing countdown demonstration test for mission AS-201.

chamber pressure had decayed to approximately 70 percent of normal. The second firing, planned for a 10-second duration, was erratic with chamber pressure oscillations that ranged from 12 to 70 percent of normal. The subnormal performance of the service propulsion system was attributed to helium ingestion.

Spacecraft communications blackout began at 1580 seconds and lasted until 1695 seconds. Entry was initiated with a space-fixed velocity of 26 481 feet per second. The command module was subjected to a maximum entry heating rate of 164 Btu/sq ft/sec at 1631.7 seconds and a maximum deceleration of 14.3g at 1639.7 seconds. The command module structure and heat shields performed adequately in the entry environment.

Loss of power to both command module reaction control systems at 1649 seconds resulted in an uncontrolled rolling entry (in excess of 26° per second) instead of the planned lifting entry. Power was returned to reaction control system A at 2121 seconds, and the required depletion burning of the command module reaction control system propellants was accomplished.

Forward heat shield jettison, drogue parachute deployment, and main parachute deployment occurred as planned. The command module landed in the Atlantic Ocean near Ascension Island at 2239.7 seconds and remained in an upright attitude. The landing time was 30.8 seconds earlier than the preflight-predicted time. Touchdown was 45 miles up range (northwest) of the recovery ship U.S.S. *Boxer*. One of the main parachutes failed to disengage after landing and was cut loose by a recovery force swimmer. The spacecraft was taken aboard the recovery ship at 02:20 p.m. e.s.t., 3 hours 8 minutes after lift-off. While all primary objectives were accomplished, the subnormal performance of some systems necessitated further investigation and improvements for future flights.

### 2.3.2 Mission AS-203

Mission AS-203 was an unmanned, research and developmental test of the Saturn IB vehicle. Major objectives of the flight were to (1) evaluate the S-IVB stage liquid hydrogen venting, (2) evaluate the S-IVB engine chilldown and recirculation systems, and (3) determine fluid dynamics of the S-IVB tanks. The data obtained were directly applicable to the Saturn V program. The S-IVB was to be used as the third stage of the Saturn V on lunar missions. A second firing of the S-IVB engine was necessary to insert an Apollo spacecraft into a translunar trajectory. Therefore, the test was conducted to simulate Saturn V third-stage engine restart in earth orbit.

The vehicle was the second Saturn IB launched. The general configuration was similar to that of mission AS-201 except that an aerodynamic fairing (nose cone) was installed in place of the spacecraft (fig. 2-8). Telemetry and recoverable 16-mm cameras (ejected during launch) were provided to furnish data on vehicle performance. In addition, two television cameras were mounted on the forward bulkhead of the S-IVB liquid hydrogen tank to aid in determining the amount of propellant sloshing.

Mission AS-203 was launched from Cape Kennedy Launch Complex 37B at 09:53:17 a.m. e.s.t. (14:53:17 G.m.t.) on July 5, 1966. The launch was delayed 1 hour and 53 minutes because of a loss of signal from one of the television cameras. The S-IVB stage, instrument unit, and nose cone were inserted into an orbit that was close to the planned 100-mile circular orbit.

Satisfactory system operation was demonstrated on the first of four orbits in which the systems were planned to be active, and all mission objectives were achieved. The simulated S-IVB engine firing duration was very close to the predicted time even though the chilldown valve failed to close after engine ignition. Data were gathered on S-IVB stage behavior in other Saturn V modes during the next three orbits. At the beginning of the fifth orbit, while a test was being performed, pressure in the liquid hydrogen tank built up to a level in excess of the design value, bursting the rank and resulting in premature destruction of the stage. However, all mission objectives had been accomplished.

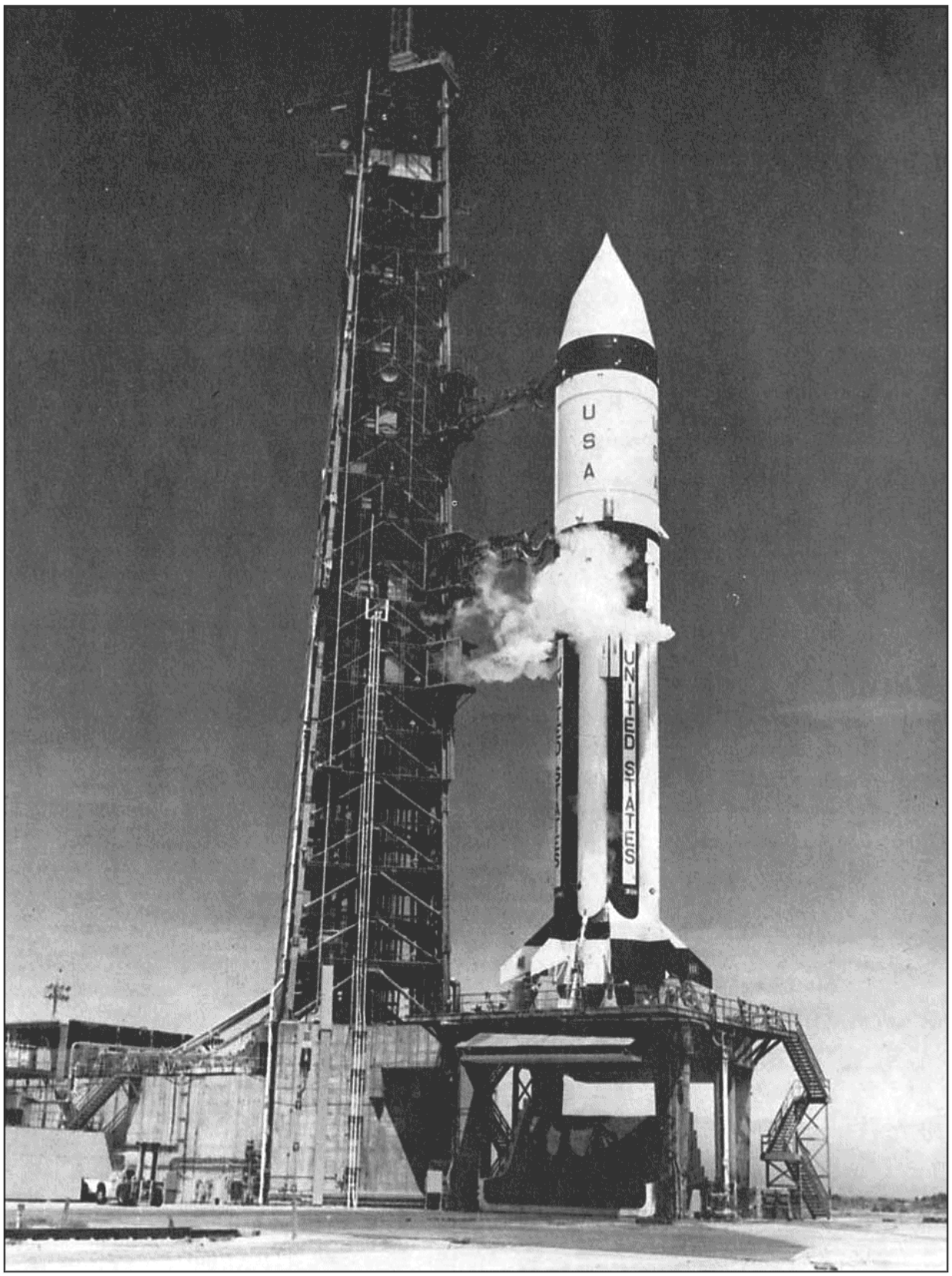


Figure 2-8.- Space vehicle for mission AS-203 during prelaunch countdown.

### 2.3.3 Mission AS-202

Mission AS-202 was an unmanned suborbital flight to further evaluate the Saturn IB launch vehicle and the Apollo command and service module before committing them to manned flight. The launch vehicle was the third Saturn IB and the spacecraft was the third production-type Block I command and service module (airframe 011). The mission objectives were (1) to obtain further launch vehicle and spacecraft information on structural integrity and compatibility, flight loads, stage separation, subsystem operation, and emergency detection system operation and (2) to evaluate the command module heat shield at high heat loads during entry at approximately 28 000 feet per second.

The Saturn IB was similar to the previous two launch vehicles. The spacecraft consisted of an adapter, the command and service module, and a launch escape system. The spacecraft systems and equipment were generally like those of the AS-201 mission spacecraft except that the fuel cells and cryogenic reactants, the guidance and navigation system, the S-band communications equipment, and the service propulsion system propellant gaging equipment were being flown for the first time. Also, the environmental control system and electrical power system radiators were operative on this mission and a closed-loop emergency detection system was provided.

The spacecraft was launched from Cape Kennedy Launch Complex 34 at 12:55:32 p.m. e.s.t. (17:55:32 G.m.t.), August 25, 1966. The spacecraft timing sequence was initiated by the S-IVB stage separation command, which was 13.8 seconds early due to higher-than-expected performance of the launch vehicle. Consequently, the flight events occurred earlier than planned (ref. 2-5). The spacecraft landed in the Pacific Ocean near Wake Island.

All mission objectives were accomplished, including the performance assessment of the systems being flown for the first time. Performance of these systems is discussed in the following paragraphs.

Fuel cell power plant electrical performance was normal, and current distribution between the cells and auxiliary batteries followed the expected ratios. The condenser exit temperatures on the two active fuel cells approached the maximum limit during the flight. The problem was attributed to entrapped air in the secondary coolant loop. Servicing procedures were changed for later spacecraft to eliminate this problem.

The cryogenic system performance was satisfactory. Pressurization, temperature, and flowrate response to fuel cell reactant gas demands were as expected.

The guidance and navigation system performed normally. Attitude control, navigation thrust vector and differential velocity control, and entry targeting were satisfactory. The command module, however, landed approximately 200 miles short of the planned point because the preflight prediction of the trim lift-to-drag ratio was not sufficiently accurate. The guidance and navigation system responded properly in attempting to correct for the undershoot condition.

The S-band communications equipment performed satisfactorily. Simulated downvoice and upvoice (via tone signals), down-link telemetry, and ranging modes were proper. Minor signal reception and station handover problems, not associated with the airborne equipment, were encountered.

The propellant gaging equipment for the service propulsion system functioned normally. Appreciable biases were noted but were explainable on the basis of preflight loading conditions and dynamic flow effects.

The environmental control system radiators provided proper heat rejection and compensated for a malfunction of the water evaporator. Erratic evaporator cooling was attributed to excess water which froze and plugged the overboard vent. Prelaunch servicing procedures were changed for later spacecraft.

The emergency detection system operated properly in the closed-loop mode. The automatic abort circuit was properly enabled at lift-off and deactivated by the launch vehicle sequencer prior to staging.

### 2.3.4 Apollo 4 Mission

The Apollo 4 mission was the fourth unmanned flight test of a production type Block I Apollo spacecraft and the initial flight of the three-stage Saturn V, the launch vehicle that was to be used for lunar missions. The first and second stages of the Saturn V (the S-IC and S-II stages) had not been flown previously. The third stage (the S-IVB) had been used as the second stage of the Saturn IB. The instrument unit configuration was basically the same configuration flight tested during the Saturn IB development series. Figure 2-9 shows the vehicle and mobile launcher as they were being positioned on the launch pad.

The mission had a number of important objectives applicable to both the launch vehicle and spacecraft. The principal objectives were (1) to demonstrate the structural and thermal integrity and compatibility of the Saturn V and the Apollo spacecraft, (2) to verify operation of the launch vehicle propulsion, guidance and control, and electrical systems, (3) to demonstrate separation of the launch vehicle stages, (4) to verify the adequacy of the thermal protection system developed for the Block II command module under lunar return conditions, and (5) to demonstrate a service propulsion system engine no-ullage start.

The Apollo 4 spacecraft (airframe 017) included a launch escape system, a command and service module, and a spacecraft/lunar module adapter. A lunar module test article was installed in the adapter. The command module was equipped with the lunar-mission-type thermal protection system that was to be tested and had other modifications applicable to the Block II spacecraft. As on previous unmanned flights, the command module contained a mission control programmer to actuate functions that would normally be performed by the crew.

The space vehicle was launched from Kennedy Space Center Launch Complex 39A (the first use of this facility) at 07:00:01 a.m. e.s.t. (12:00:01 G.m.t.) on November 9, 1967. Detailed flight events are given in reference 2-6.

The launch phase was normal. All planned events occurred within allowable limits, and structural loading was well within the capability of the vehicle. Measurements telemetered from the command module indicated that qualification vibration levels were not exceeded and verified the adequacy of thermal prediction techniques.

The spacecraft was inserted into a circular orbit by the S-IVB stage after approximately 11 minutes of powered flight. Near the end of the second revolution, the S-IVB engine was successfully reignited to place the spacecraft into a simulated translunar trajectory. At the completion of the maneuver, the command and service module was separated from the S-IVB stage, and the service propulsion system engine was fired for approximately 15 seconds to demonstrate the capability of starting the engine in zero gravity without performing a reaction control system ullage maneuver. There were no adverse effects, and the maneuver raised the apogee of the spacecraft trajectory from 9292 miles to 9769 miles. A few seconds after service propulsion system engine cutoff, the spacecraft was oriented to an attitude in which the side hatch was pointed directly toward the sun. This attitude was maintained for approximately 4-1/2 hours to obtain thermal data.

After approximately 8 hours and 10 minutes of flight, a second service propulsion system maneuver was performed to accelerate the spacecraft to a velocity representative of severe lunar return entry conditions. Shortly afterward, the command module was separated from the service module and oriented to the entry attitude.

The inertial velocity at atmospheric entry, which occurs at an altitude of 400 000 feet, was approximately 36 000 feet per second, about 210 feet per second greater than predicted. This overspeed was caused by a longer-than-planned firing of the service propulsion system. Because of the change in entry conditions, the peak deceleration force was 7.3g rather than the predicted 8.3g.

The guidance and control system performed satisfactorily in guiding the spacecraft to the desired landing point. Although the landing was about 5 miles short of the target point, it was within the accuracy predicted before the mission. The forward heat shield and one of the main parachutes were recovered along with the command module by the primary recovery ship, the U.S.S. *Bennington*. Postflight inspection of the command module indicated that the thermal protection system withstood the lunar return entry environment satisfactorily.

Figure 2-9.- Apollo 4 space vehicle on Launch Complex 39A.

### 2.3.5 Apollo 5 Mission

The Apollo 5 mission was the first flight of a lunar module and the fourth flight test of the Saturn IB launch vehicle. The space vehicle consisted of an S-IB stage, an S-IVB stage, an instrument unit, an adapter, the lunar module, and a nose cone. Primary objectives of the mission were to verify the lunar module ascent and descent propulsion systems and the abort staging function for manned flight. These objectives were satisfied.

Lift-off from Cape Kennedy Launch Complex 37B (fig. 2-10) was initiated at 05:48:08 p.m. e.s.t. (22:48:08 G.m.t.) on January 22, 1968. (The detailed sequence of mission events is given in reference 2-7.) The lunar module and S-IVB stage were inserted into earth orbit after 10 minutes and 3 seconds of powered flight. Lunar module loads and measured vibrations were within the design capability of the structure during powered flight. Spacecraft cooling began after S-IVB stage cutoff, and the equipment temperatures were properly regulated by the coolant system for the remainder of the mission. The lunar module was separated from the S-IVB stage by using the reaction control system engines. Separation disturbances were small. The lunar module was maneuvered to a cold-soak attitude which was maintained by the guidance system until early in the third revolution. A minimal reaction control system engine duty cycle was required to maintain the desired attitude.

Midway through the third revolution, the first descent engine firing was initiated. The planned duration of this firing was 38 seconds; however, after only 4 seconds, the guidance system shut down the engine. Both the guidance system and the propulsion system operated properly, and the premature shutdown resulted from an incorrect definition of the engine thrust buildup characteristics as used in the guidance system software.

After the premature shutdown, a planned alternate mission that provided minimum mission requirements was selected. At approximately 6 hours and 10 minutes into the flight, the automatic sequencer within the onboard mission programmer initiated the sequencing for the second and third descent engine firings, the abort staging, and the first ascent engine firing. Attitude rate control was maintained with the backup control system. The descent engine gimbaled properly and responded smoothly to the commands to full throttle. The thermal aspects of the supercritical helium pressurization system could not be adequately evaluated because of the short duration of the three descent engine firings. During abort staging, all system operations and vehicle dynamics were satisfactory for manned flight.

After the first ascent stage engine firing, the primary guidance and control system was reselected to control the spacecraft attitudes and rates. Because the primary system had been passive during the abort staging sequence, the computer program did not reflect the change of mass resulting from staging. Therefore, computations of reaction control system engine firing times were based on the mass of a two-stage vehicle and resulted in an extremely high propellant usage by the reaction control system engines, eventually causing propellant depletion. Because of excessive reaction control system engine activity, the engine cluster red-line upper limit was exceeded; however, no detrimental effects were evident.

The reaction control system was later subjected to abnormal operating conditions because of low manifold pressures after propellant depletion. Continued operation under these abnormal conditions resulted in three malfunctions within the system, but none had an appreciable effect on the mission.

The second firing of the ascent engine, initiated by the automatic sequencer, began at 7 hours 44 minutes 13 seconds into the mission and continued until thrust decay 5 minutes and 47 seconds later. During the initial portion of the firing, attitude rate control was maintained by using propellants from the ascent propulsion system tanks through interconnect valves to the reaction control system engines. However, the sequencer automatically closed the interconnect valves and switched the system over to the already depleted tanks. With the resultant loss of rate control, the vehicle began tumbling while the ascent engine was firing. All tracking was lost within 2 minutes after ascent stage engine thrust decay. The lunar module had been in a retrograde orientation during the controlled portion of the firing, and trajectory simulations indicated that the lunar module entered over the Pacific Ocean soon after the ascent stage engine firing. The predicted point of impact was approximately 400 miles west of the coast of Central America. The duration of the flight was approximately 8 hours.

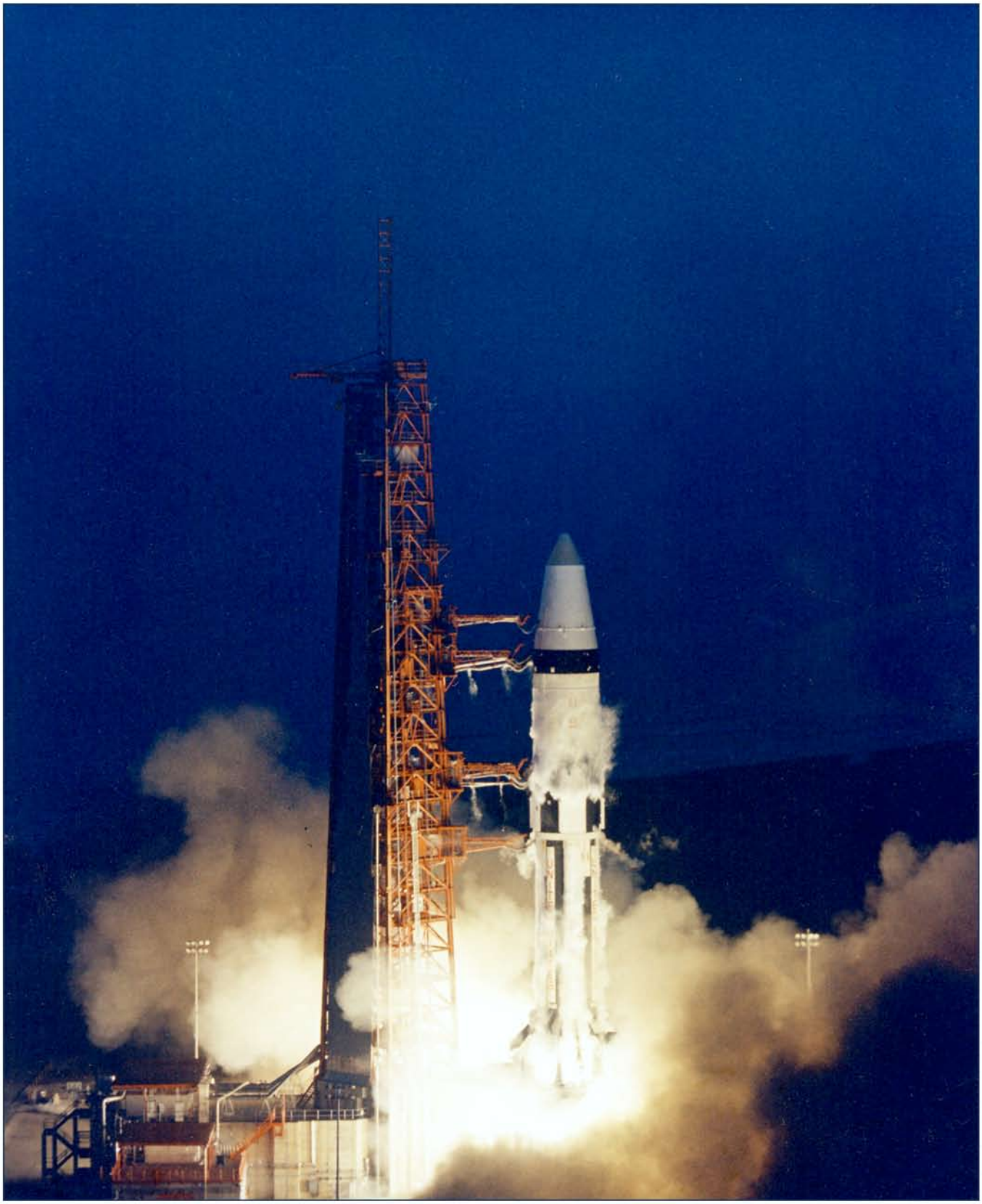

Figure 2-10.- Lift-off of space vehicle for Apollo 5 mission.

The overall performance of the lunar module was good and met all requirements for manned orbital flight. All operational systems were successfully verified, and the abort staging sequence was demonstrated.

### 2.3.6 Apollo 6 Mission

The Apollo 6 mission was accomplished on April 4, 1968. This was the second mission in which a Saturn V launch vehicle was used with an unmanned Block I command and service module and a lunar module test article.

The space vehicle was launched from Kennedy Space Center Launch Complex 39A at 07:00:01 a.m. e.s.t. (12:00:01 G.m.t.). Lift-off was normal but a major structural anomaly in the spacecraft/launch vehicle adapter occurred during first-stage boost. Approximately 2 minutes 13 seconds after lift-off, abrupt changes were indicated by strain, vibration, and acceleration measurements in the S-IVB, instrument unit, adapter, lunar module test article, and command and service module. The anomaly was apparently caused by 5-hertz oscillations induced by the launch vehicle; these oscillations exceeded the spacecraft design criteria. Photographic coverage from ground and aircraft cameras revealed material coming from the area of the adapter. (Sec. 4.4.2 of this report and ref. 2-8 contain additional information concerning this anomaly.)

After second-stage ignition, the boost phase was normal until two engines in the S-II stage shut down early. The firing time of the remaining three S-II stage engines was extended approximately 1 minute in an attempt to attain the desired velocity. The S-IVB stage firing was also longer than planned. At termination of the S-IVB thrust, the orbit had a 198-mile apogee and a 96-mile perigee, instead of the planned 100-mile near-circular orbit.

An attempt to reignite the S-IVB engine for a simulated translunar injection firing was unsuccessful. A ground command to the command and service module implemented a preplanned alternate mission that consisted of a long-duration firing (442 seconds) of the service propulsion system engine. This firing was executed under onboard guidance computer control and the onboard programmed apogee of 12 000 miles was attained. After the service propulsion system engine firing, the command and service module was aligned to a preset cold-soak attitude. The preflight-planned second firing of the service propulsion system engine was inhibited by ground command.

Atmospheric entry at 400 000 feet occurred at an inertial velocity of 32 830 feet per second and a flight-path angle of minus 5.85 degrees. The entry parameters were lower than predicted because of the S-IVB failure to reignite. The landing was about 36 miles up range of the targeted landing point as a result of the abnormal launch and insertion trajectory. This was the first mission in which the command module assumed the stable II (inverted) flotation attitude after landing. The command module was returned to the stable I (upright) attitude by the uprighting system. The mission duration was 9 hours 57 minutes 20 seconds.

The overall performance of the command and service module was satisfactory and none of the system anomalies precluded satisfactory completion of the mission. The most significant spacecraft anomaly was the aforementioned structural anomaly.

The abnormal occurrences during the boost phase subjected the command and service module to adverse environments that would normally not be seen during a flight test program. The alternate mission flown was the more difficult to accomplish of the two alternatives, which were (1) to attempt to complete the planned trajectory and obtain new evaluation data points or (2) to abort the mission and recover the spacecraft. The manner in which the command and service module performed during the alternate mission, after the adverse initial conditions, demonstrated the versatility of the systems.

The single primary spacecraft objective, demonstration of the performance of the emergency detection system operating in a closed-loop mode, was achieved. The secondary spacecraft objectives that were satisfied included demonstration of (1) effective operation of mission support facilities during the launch, orbital, and recovery phases of the mission, (2) successful operation of the service propulsion system (including a no-ullage start), and (3) proper operation of selected spacecraft systems (including electrical power, communications, guidance and control, and environmental control). The secondary spacecraft objectives that were partially satisfied included (1) demonstration of the adequacy of the Block II command module heat shield for entry

at lunar return conditions (not fully satisfied because of failure to achieve the high velocity planned for entry), (2) demonstration of the structural and thermal integrity and compatibility of launch vehicle and spacecraft, and (3) confirmation of launch loads and dynamic characteristics. Reference 2-9 provides details on spacecraft performance.

## 2.4 MANNED APOLLO/SATURN FLIGHTS

The manned flights of the Apollo program were to be initiated with the AS-204 mission; however, a fire in the command module during preflight checkout on the launch pad resulted in the death of the three crewmen and an 18-month delay of the first manned mission. The manned phase included two earth orbital missions, two lunar orbital missions, and seven lunar landing missions, one of which was aborted. The six successful lunar landing missions allowed approximately 838 pounds (380 kilograms) of lunar material to be returned to earth. In addition, these missions and the lunar orbital missions provided a wealth of scientific data about the moon and its environment for analysis by scientists throughout the world.

### 2.4.1 Apollo I Mission

On January 27, 1967, tragedy struck the Apollo program when a flash fire occurred in command module 012 during a launch pad test of the Apollo/Saturn space vehicle being prepared for the first manned flight, the AS-204 mission. Three astronauts, Lt. Col. Virgil I. Grissom, a veteran of Mercury and Gemini missions; Lt. Col. Edward H. White, the astronaut who had performed the first United States extravehicular activity during the Gemini program; and Roger B. Chaffee, an astronaut preparing for his first space flight, died in this tragic accident.

A seven-man board, under the direction of the NASA Langley Research Center Director, Dr. Floyd L. Thompson, conducted a comprehensive investigation to pinpoint the cause of the fire. The final report (ref. 2-10), completed in April 1967, was subsequently submitted to the NASA Administrator. The report presented the results of the investigation and made specific recommendations that led to major design and engineering modifications, and revisions to test planning, test descipline, manufacturing processes and procedures, and quality control. With these changes, the overall safety of the command and service module and the lunar module was increased substantially. The AS-204 mission was redesignated Apollo I in honor of the crew.

### 2.4.2 Apollo 7 Mission

Apollo 7, the first manned mission in the Apollo program was an earth orbital mission. The command and service module was the first Block II configuration spacecraft flown, and the launch vehicle was a Saturn IB. Flight crewmen for the Apollo 7 mission were Walter M. Schirra, Jr., Commander; Donn S. Eisele, Command Module Pilot; and R. Walter Cunningham, Lunar Module Pilot. The primary objectives of this flight were to demonstrate command and service module/crew performance, crew/space vehicle/mission support facilities performance, and the command and service module rendezvous capability.

The spacecraft was launched at 11:02:45 a.m. e.d.t. (15:02:45 G.m.t.) on October 11, 1968, from Cape Kennedy Launch Complex 34 (fig. 2-11). The launch phase was normal, and the spacecraft was inserted into a 123- by 153-mile earth orbit. The crew performed a manual takeover of attitude control from the launch vehicle S-IVB stage during the second orbital revolution, and the control system responded properly. The command and service module was separated from the S-IVB stage approximately 3 hours after launch; the separation was followed by spacecraft transposition, simulated docking, and stationkeeping with the S-IVB.

A phasing maneuver was performed using the service module reaction control system to establish the conditions required for rendezvous with the S-IVB stage on the following day. The maneuver was intended to place the spacecraft approximately 75 miles ahead of the S-IVB. However, the S-IVB orbit decayed more rapidly than anticipated during the six revolutions after the phasing maneuver, and a second phasing maneuver was performed to obtain the desired conditions.

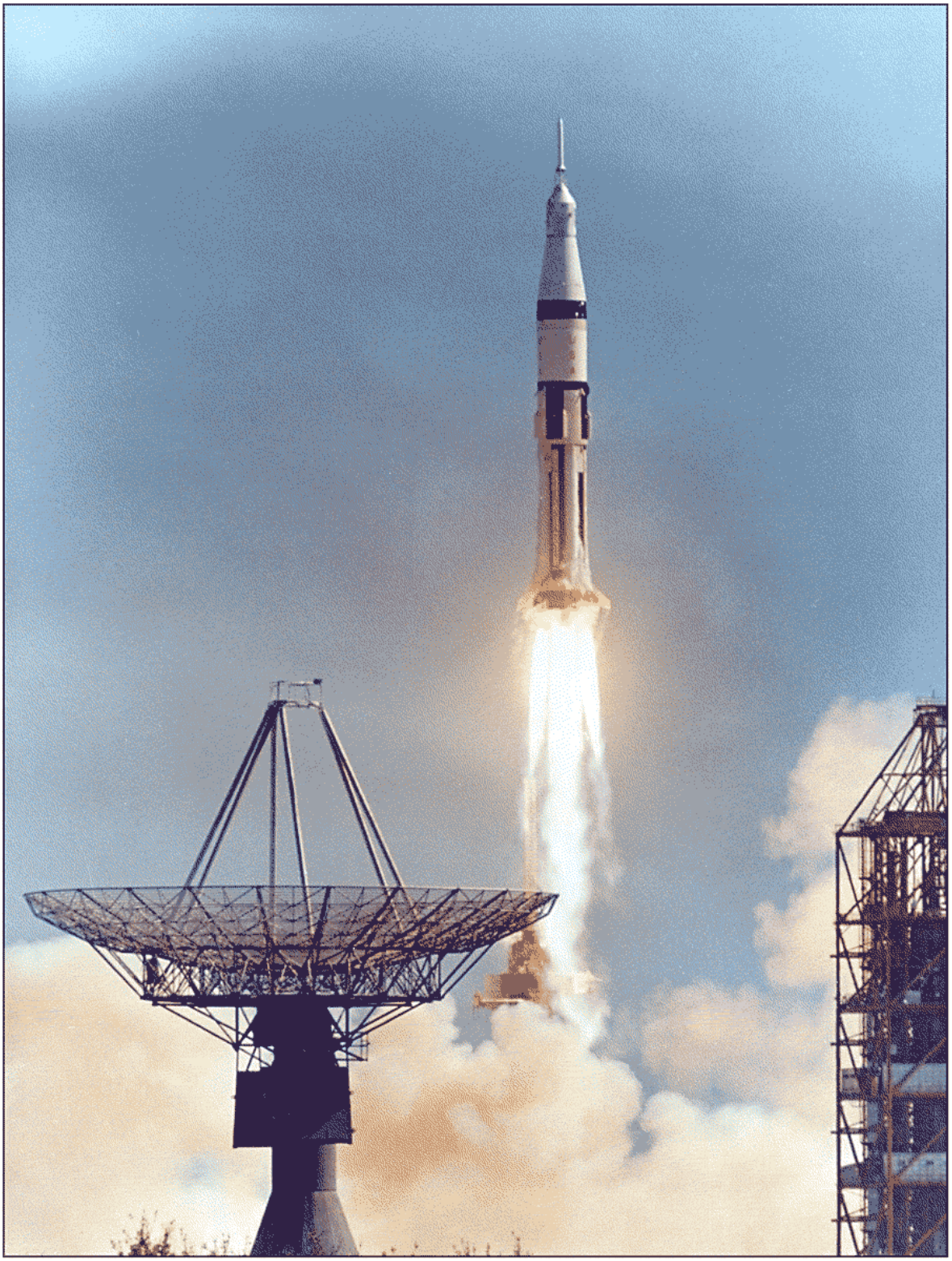

Figure 2-11.- Lift-off of space vehicle for Apollo 7 mission.

Two service propulsion system firings were required for rendezvous. The first firing, a corrective combination maneuver, was necessary to achieve the proper phase and altitude offset so that the second firing would result in an orbit coelliptic with that of the S-IVB. The two firings achieved the desired conditions for rendezvous terminal phase initiation. The terminal phase initiation maneuver was performed with an onboard computer solution based on optical tracking of the S-IVB stage with the sextant. A small midcourse correction was then made, followed by braking and final closure to within 70 feet of the S-IVB. Stationkeeping was performed for approximately 20 minutes, after which a 2-foot-per-second service module reaction control system posigrade maneuver removed the spacecraft from the vicinity of the S-IVB stage. The next 24-hour period was devoted to a sextant calibration test, a rendezvous navigation test, an attitude control test, and a primary evaporator test. The crew used the sextant to track the S-IVB visually to distances of as much as 320 miles.

The service propulsion system was fired six additional times during the mission. The third firing was a 9.1-second maneuver controlled by the stabilization and control system. The maneuver was performed to increase the backup deorbit capability of the service module reaction control system. The fourth firing was performed to evaluate the minimum-impulse capability of the service propulsion engine. The fifth firing was performed to position the spacecraft for an optimum deorbit maneuver at the end of the planned orbital phase. To assure verification of the propellant gaging system, the firing duration was increased from that planned originally. The 67.6-second maneuver produced the largest velocity change during the mission, 1693 feet per second, and incorporated a manual thrust-vector-control takeover approximately halfway through the maneuver. The sixth maneuver, performed during the eighth mission day, was a second minimum-impulse maneuver. The seventh firing, performed on the 10th mission day, placed the spacecraft perigee at the proper longitude for entry and recovery. The eighth firing was performed to deorbit the spacecraft.

Tests performed during the mission included a rendezvous radar transponder test and a test to determine whether the environmental control system radiator had degraded. The radar test was performed during revolution 48, and lockon was accomplished by a radar site at the White Sands Missile Range at a range of 415 miles. The radiator test was also successfully conducted, and operation of the system was validated for lunar flight.

The final day of the mission was devoted primarily to preparations for the deorbit maneuver, which was performed at 259:39:16. The service module was jettisoned, and the entry was performed using both the automatic and manual guidance modes.

The parachute system effected a soft landing in the Atlantic Ocean near the recovery ship, U.S.S. *Essex*. On landing, the spacecraft assumed a stable II flotation attitude, but was successfully returned to the normal flotation position by the inflatable bag uprighting system. The crew was retrieved by helicopter, and the spacecraft was later taken aboard the recovery ship. Mission duration was 260 hours 9 minutes 3 seconds.

All spacecraft systems operated satisfactorily, and all but one of the detailed test objectives were met. Additional information is given in reference 2-11.

### 2.4.3 Apollo 8 Mission

Apollo 8, the first flight to take men to the vicinity of the moon, was a bold step forward in the development of a lunar landing capability. Also, Apollo 8 was the first manned mission to be launched with the three-stage Saturn V vehicle. Figure 2-12 shows the vehicle being transported to the launch pad. The crewmen were Frank Borman, Commander; James A. Lovell, Jr., Command Module Pilot; and William A. Anders, Lunar Module Pilot. The mission, originally planned as an earth orbital flight, was changed to a lunar orbital flight after an evaluation of all aspects of the progress of the program. To accommodate this change, crew training and ground support preparations were accelerated.

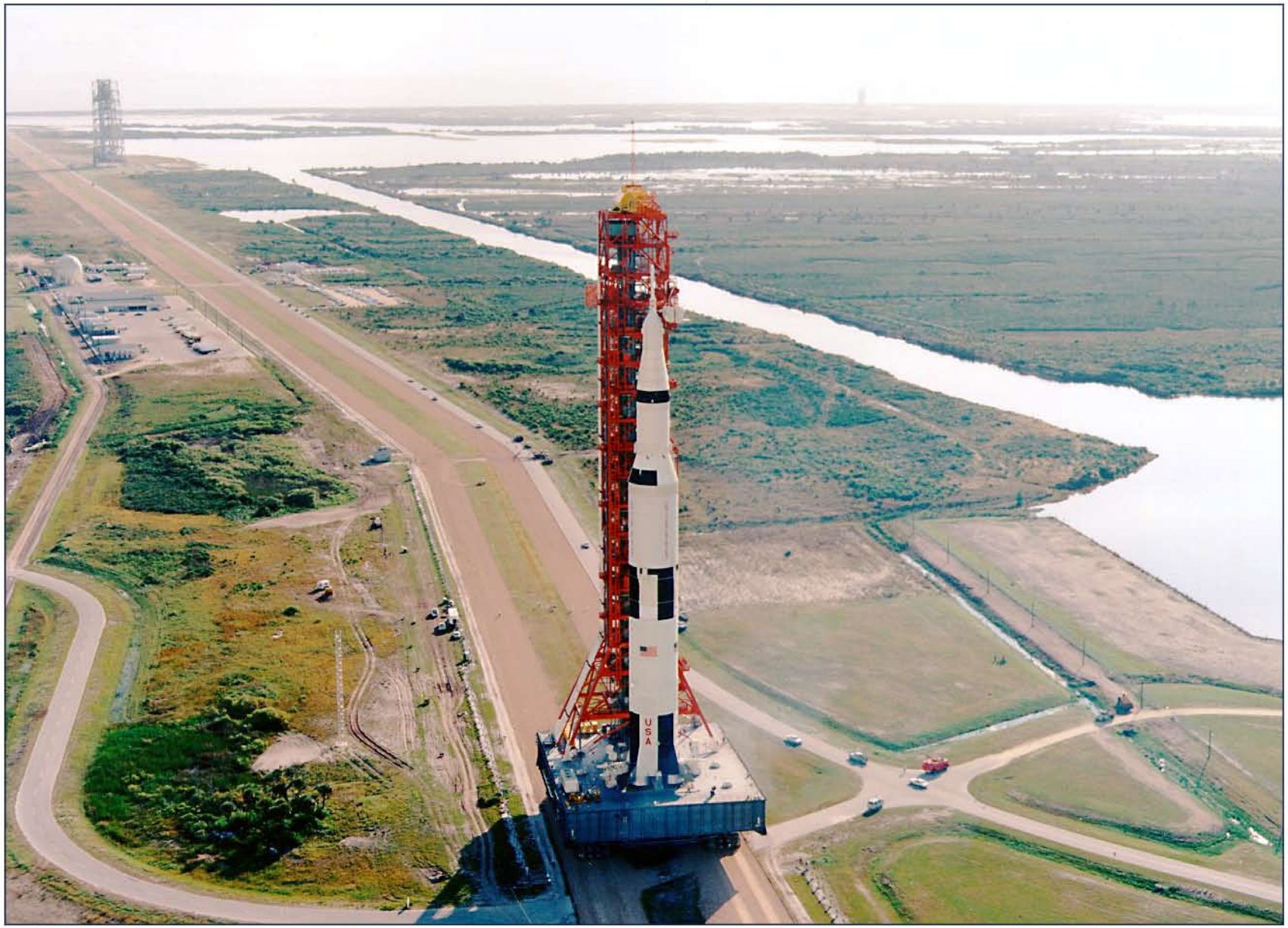


Figure 2-12.- Space vehicle for Apollo 8 mission being transported to Launch Complex 39A.

The primary objectives for the Apollo 8 mission were to demonstrate the combined performance of the crew, space vehicle, and mission support team during a manned Saturn V mission using the command and service module and to demonstrate the performance of nominal and selected backup lunar-orbit-rendezvous procedures. The spacecraft was a Block II command and service module. A lunar module test article was installed for mass loading purposes in the spacecraft/launch vehicle adapter in place of an actual lunar module.

The space vehicle was launched from Kennedy Space Center Launch Complex 39A at 07:51:00 a.m. e.s.t. (12:51:00 G.m.t.) on December 21, 1968, and the spacecraft was inserted into a 103- by 98-mile earth parking orbit. After the spacecraft had been in earth orbit almost 3 hours for in-flight systems checks, the translunar injection maneuver was performed. The spacecraft was separated from the S-IVB approximately 25 minutes later using the service module reaction control system and was turned around to permit observation and photography of the S-IVB stage. The crew then performed two reaction control system maneuvers to increase the separation distance. A ground-commanded liquid oxygen dump provided impulse for targeting the S-IVB stage to fly past the moon and into solar orbit.

The translunar injection maneuver was so accurate that only one small midcourse correction would have been sufficient to achieve the desired lunar orbit insertion altitude of approximately 65 miles. However, the second of the two maneuvers that separated the spacecraft from the S-IVB altered the trajectory so that a large midcourse correction at 11 hours was required to achieve the desired trajectory. For this midcourse correction, the service propulsion system was used to reduce the altitude of closest approach to the moon from 459 miles to 66.3 miles. An additional small midcourse correction was performed approximately 50 hours later to refine further the lunar insertion conditions. During the 66-hour translunar coast, the crew made systems checks and navigation sightings, tested the spacecraft high-gain antenna (installed for the first time on this mission), and televised pictures to earth.

Lunar orbit insertion was performed with the service propulsion system and the resultant orbit was 60 by 168.5 miles. After approximately 4 hours of navigation checks and ground-based determination of the orbital parameters, a lunar orbit circularization maneuver was performed, which resulted in an orbit of 60.7 by 59.7 miles.

The next 12 hours of crew activity in lunar orbit involved photography of both the near and far sides of the moon, landing-area sightings, and television transmissions. Most remaining non-critical flight plan activities were deleted during the final 4 hours in orbit because of crew fatigue, and this period was devoted to crew rest and preparation for transearth injection. The injection maneuver was performed approximately 89 hours into the flight and resulted in a velocity change of 3517 feet per second.

The transearth coast activities included star/horizon navigation sightings using both moon and earth horizons. Passive thermal control, using a roll rate of approximately 1 revolution per hour, was used during most of the translunar and transearth coast phases to maintain nearly stable onboard temperatures. Only one small transearth midcourse correction, made with the service module reaction control system, was required.

Command module/service module separation was performed at approximately 146-1/2 hours, and command module entry occurred approximately 17 minutes later. The command module followed an automatically guided entry profile and landed in the Mid-Pacific after a flight duration of 147 hours 42 seconds. The transearth injection targeting and separation and the entry guidance were so precise that the command module landed about 1 1/2 miles from the planned target point. The crew were retrieved and taken aboard the U.S.S. *Yorktown* at 17:20 G.m.t. on December 27, 1968.

With only minor problems, all spacecraft systems operated as intended, and all primary mission objectives were successfully accomplished. Crew performance was admirable throughout the mission. The navigation techniques developed for translunar and lunar orbital flight proved to be more than adequate to maintain required accuracies for lunar orbit insertion and transearth injection. Communications and tracking at lunar distances were excellent in all modes. Additional information on the Apollo 8 mission is contained in reference 2-12.

### 2.4.4 Apollo 9 Mission

The Apollo 9 mission was a 10-day flight in earth orbit to qualify the lunar module for lunar orbital operations. The crewmen were James A. McDivitt, Commander; David R. Scott, Command Module Pilot; and Russell L. Schweickart, Lunar Module Pilot. The primary objectives of the mission were (1) to demonstrate the performance of the crew, space vehicle, and mission support facilities during a manned Saturn V mission using the lunar module and the command and service module; (2) to demonstrate the ability of the crew to operate the lunar module systems for periods of time comparable to those of a lunar landing mission; and (3) to demonstrate some of the nominal and backup lunar landing mission activities, including docking, intravehicular transfer, rendezvous, and extravehicular capability. To meet these objectives, the lunar module was evaluated during three separate manning periods that required multiple activation and deactivation of systems, a situation unique to this mission.

The space vehicle was launched from Launch Complex 39A at the Kennedy Space Center. The launch occurred on March 3, 1969, at 11:00:00 a.m. e.s.t. (16:00:00 G.m.t.), and the insertion orbit was 102.3 by 103.9 miles. After postinsertion checkout, the command and service module was separated from the S-IVB stage, transposed, and docked with the lunar module. At approximately 4 hours, an ejection mechanism, used for the first time on this mission, ejected the docked spacecraft from the S-IVB. After a separation maneuver, the S-IVB engine was fired twice by remote control, and the final maneuver placed the spent stage into a solar orbit.

Crew activity on the second day was devoted to systems checks and to three service propulsion system maneuvers while docked. On the third day, the Commander and the Lunar Module Pilot entered the lunar module to activate and check out the systems and to fire the descent engine with the vehicles still docked. Attitude control with the digital autopilot and manual throttling of the descent engine to full thrust were demonstrated.

Extravehicular operations were demonstrated on the fourth day of flight. The actual operations were abbreviated from those of the flight plan because of a minor inflight illness experienced by one crewmember on the preceding day and because of the many activities required for rendezvous preparation. Wearing the extravehicular mobility unit, the Lunar Module Pilot egressed the depressurized lunar module and remained near the hatch for approximately 47 minutes. During this same period, the Command Module Pilot, dependent on the command and service module systems for life support, partially exited through the command module hatch for observation, photography, and retrieval of thermal samples (fig. 2-13). The Lunar Module Pilot also retrieved thermal samples from the spacecraft exterior. A planned extravehicular transfer from the lunar module to the command module was not conducted because of the abbreviated operation.

On the fifth day, the Commander and the Lunar Module Pilot again transferred to the lunar module, this time to perform a lunar-module-active rendezvous. The lunar module primary guidance system was used throughout the rendezvous; however, mirror-image backup maneuver computations were made in the command module. The lunar module descent propulsion system was used to perform the phasing and insertion maneuvers, and the ascent engine was used to establish a constant differential height after the coelliptic sequence had been initiated. After redocking and crew transfer back into the command module, the lunar module ascent stage was jettisoned and the ascent engine was fired to oxidizer depletion.

The sixth service propulsion maneuver, to lower the perigee, was performed successfully during the sixth day. In the final 4 days, a series of landmark tracking exercises and a multispectral photography experiment were performed. The service propulsion system was fired for the seventh time at approximately 169-1/2 hours as a test and for the eighth time at 240-1/2 hours to deorbit the command and service module. This last maneuver was performed one revolution later than planned because of unfavorable weather in the planned recovery area. After a normal entry using the primary guidance system, the command module landed within 2.7 miles of the target point in the Atlantic Ocean after 241 hours 54 seconds of flight. The crewmen were recovered by helicopter and were aboard the primary recovery ship, the U.S.S. *Guadalcanal*, 49 minutes after landing. Further details of the Apollo 9 mission are given in reference 2-13.

Figure 2-13.- View of Command Module Pilot during Apollo 9 extravehicular activity.

### 2.4.5 Apollo 10 Mission

Apollo 10 was an 8-day mission to qualify the combined spacecraft in the lunar environment. Particular primary objectives were to demonstrate the capability for rendezvous and docking in the lunar gravitational field and to evaluate docked and undocked lunar navigation. The mission events simulated those for a lunar landing mission. In addition, visual observations and stereoscopic strip photography of Apollo Landing Site 2, the planned location of the first lunar landing, were accomplished.

The Apollo 10 space vehicle, with crewmen Thomas P. Stafford, Commander; John W. Young, Command Module Pilot; and Eugene A. Cernan, Lunar Module Pilot; was launched on May 18, 1969, from Kennedy Space Center Launch Complex 39B at 11:49:00 a.m. e.s.t. (16:49:00 G.m.t.). The spacecraft and S-IVB stage combination was inserted into an earth parking orbit of 102.6 by 99.6 miles. After onboard systems were checked, the S-IVB engine was ignited at 2-1/2 hours elapsed time to place the spacecraft on a translunar trajectory.

At 3 hours after lift-off, the command and service module was separated from the S-IVB stage and then transposed and docked with the lunar module. The docked spacecraft were ejected 40 minutes later, and a separation maneuver was performed. The S-IVB stage was placed into a solar orbit by ground command for propulsive venting of residual propellants.

A preplanned midcourse correction executed at 26-1/2 hours adjusted the trajectory to coincide with a July lunar landing trajectory. The passive thermal control technique was employed to maintain desired spacecraft temperatures throughout the translunar coast except when a specific attitude was required.

At 76 hours mission elapsed time, the spacecraft was inserted into a lunar orbit of 60 by 171 nautical miles. After two revolutions of tracking and ground updates, a maneuver was performed to circularize the orbit at 60 nautical miles. The Lunar Module Pilot entered the lunar module, checked all systems, and then returned to the command module for the scheduled sleep period.

Activation of the lunar module systems began at 95 hours, and the spacecraft were undocked approximately 3 hours later. Figure 2-14 shows the command and service module as viewed from the lunar module. After stationkeeping, the lunar module was inserted into the descent orbit. An hour later, the lunar module made a low-level pass over Apollo Landing Site 2. The pass was highlighted by a test of the landing radar, by the visual observation of lunar lighting, by stereoscopic strip photography, and by the execution of the phasing maneuver using the descent engine. The lowest measured point in the trajectory was 47 400 feet above the lunar surface. After one revolution in the phasing orbit of approximately 8 by 194 miles, the lunar module ascent stage was separated from the descent stage and the ascent engine was used to perform an insertion maneuver. The rendezvous that followed was representative of one that would follow a normal ascent from the lunar surface. The rendezvous operation commenced with the lunar module coelliptic sequence initiation maneuver approximately one-half revolution from insertion, followed by a small constant differential height maneuver and the terminal phase initiation maneuver. Docking was complete at 106-1/2 hours, and the lunar module crew transferred into the command module. The lunar module ascent stage was jettisoned, and the ascent engine was fired by remote control to propellant depletion at 109 hours. After a rest period, the crew conducted landmark tracking and photography exercises. Transearth injection was performed at 137-1/2 hours.

The passive thermal control technique and the navigation procedures used on the translunar portion of flight were also used during the earth return. Only one midcourse correction of approximately 2 feet per second was required; this correction was made 3 hours before command module/service module separation. The command module entry was normal, and the spacecraft landed near the primary recovery vessel, the U.S.S. *Princeton*, after an elapsed flight time of 192 hours 3 minutes and 23 seconds. At daybreak, the crewmen were retrieved by helicopter.

All systems in the command and service module and the lunar module were managed very well. Although some problems occurred, most were minor and none caused a constraint to completion of mission objectives. Valuable data concerning lunar gravitation were obtained during the 60 hours in lunar orbit.

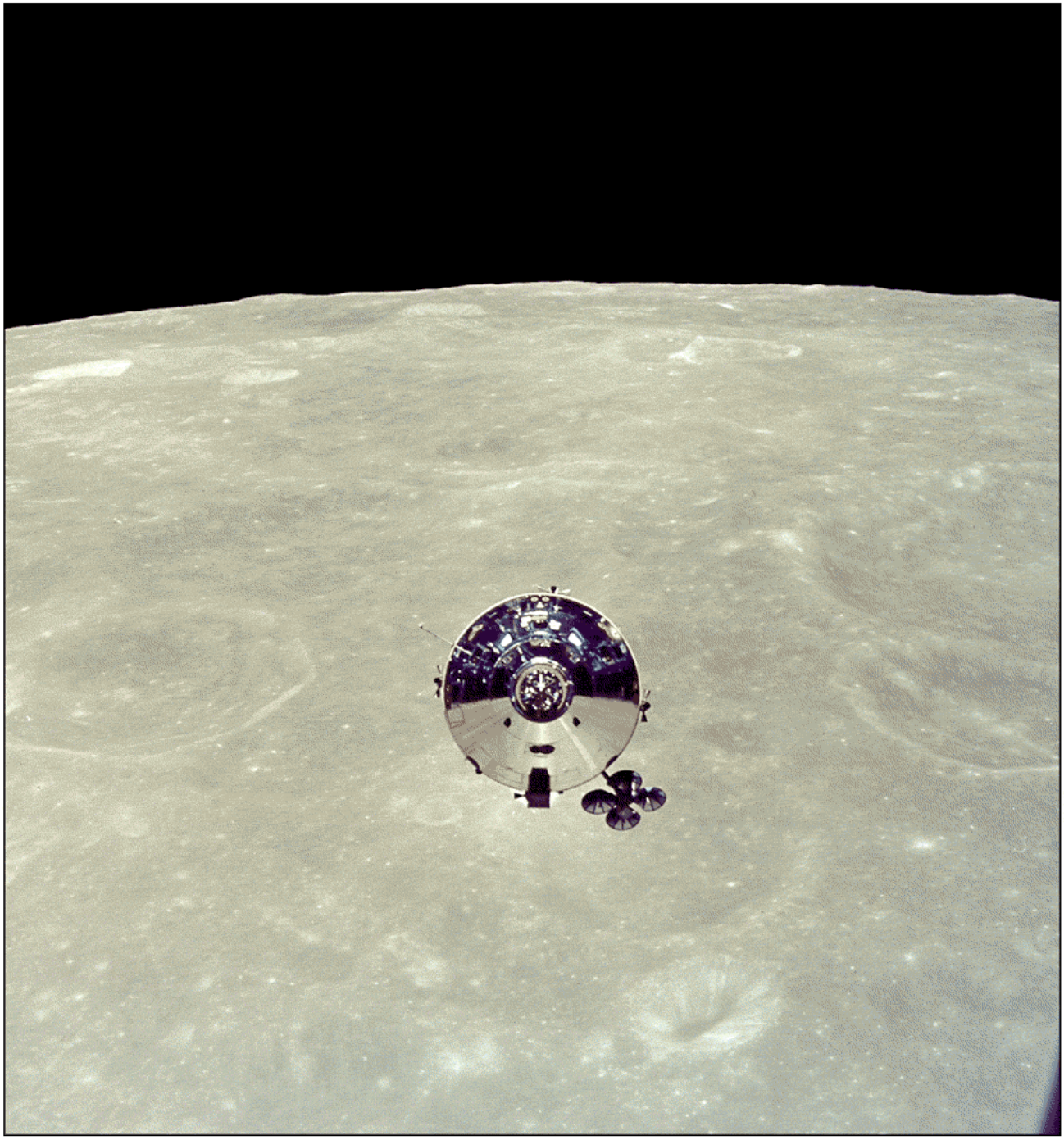

Figure 2-14.- Apollo 10 command and service module as viewed from lunar module after undocking.

Spacecraft systems performance was satisfactory, and all mission objectives were accomplished (ref. 2-14). All detailed test objectives were satisfied with the exception of the lunar module steerable antenna and relay modes for voice and telemetry communications.

### 2.4.6 Apollo 11 Mission

The Apollo 11 mission accomplished the basic objective of the Apollo program; that is landing two men on the lunar surface and returning them safely to earth. Crewmembers for this historic mission were Neil A. Armstrong, Commander; Michael Collins, Command Module Pilot; and Edwin E. Aldrin, Jr., Lunar Module Pilot.

The Apollo 11 space vehicle was launched from Kennedy Space Center Launch Complex 39A on July 16, 1969, at 08:32:00 a.m. e.s.t. (13:32:00 G.m.t.). The spacecraft and S-IVB stage of the launch vehicle were inserted into a 100.7- by 99.2-mile earth parking orbit. After a 2-1/2-hour checkout period, the spacecraft/S-IVB stage combination was injected into the translunar coast phase of the mission. Trajectory parameters after the translunar injection firing were nearly perfect. A midcourse correction of 20.9 feet per second was made during the translunar phase. During the remaining periods of free-attitude flight, passive thermal control was used to maintain spacecraft temperatures within desired limits. The Commander and the Lunar Module Pilot transferred to the lunar module during the translunar phase to make the initial inspection and preparations for the systems checks that would be made shortly after lunar-orbit insertion.

The docked spacecraft were inserted into a 60- by 169.7-mile lunar orbit at approximately 76 hours after launch. Four hours later, the lunar-orbit circularization maneuver was performed to place the combined spacecraft in a 65.7- by 53.8-mile lunar orbit. The Lunar Module Pilot entered the lunar module at approximately 81 hours after launch for initial powerup and systems checks. After a planned sleep period was completed at 93-1/2 hours elapsed time, the lunar module crewmen transferred to the lunar module and made final preparations for descent to the lunar surface. The lunar module was undocked from the command and service module at a mission time of approximately 100 hours. The lunar module descent orbit insertion maneuver was performed with the descent propulsion system at 101-1/2 hours into the mission, and the powered descent initiation occurred 1 hour later. The lunar module was maneuvered manually approximately 1100 feet down range from the preplanned landing point during the final 2-1/2 minutes of descent.

Man first landed on the moon at 03:17 p.m. e.s.t. on July 20, 1969, 102 hours 45 minutes 39.9 seconds mission elapsed time. The spacecraft landed in Mare Tranquillitatis (Sea of Tranquillity) at latitude 0°41'15" N. and longitude 23°26' E. based upon the coordinates of reference 2-15. After a 2-hour postlanding checkout of all lunar module systems, the crew configured the spacecraft controls for lunar stay and ate their first meal on the lunar surface. A crew rest period had been planned to precede the extravehicular activity of exploring the lunar surface but was not needed. After donning the back-mounted portable life support and oxygen purge systems the Commander egressed through the forward hatch and deployed an equipment module from the descent stage. A camera in the equipment module provided live television coverage of the Commander as he descended the ladder to the surface. The Commander made first contact at 09:56:15 p.m. e.s.t. on July 20, 1969, or 109 hours 56 minutes 15 seconds into the mission. The Lunar Module Pilot egressed soon thereafter, and both crewmen used the initial period on the surface to become acclimated to the reduced gravity and the unfamiliar surface conditions. A contingency soil sample was taken from the surface, and the television camera was deployed to include most of the lunar module in the field of view. Figure 2-15 is a photograph of the Commander as he stood beside the deployed United States flag during this part of the extravehicular activity. The crew then activated scientific experiments which included a solar wind detector, a passive seismometer, and a laser retroreflector. The Lunar Module Pilot evaluated his ability to operate and move about, and he was able to do so rapidly and confidently. The crew collected approximately 21 kilograms of lunar surface material for analysis. The surface exploration was concluded in the allotted time of 2-1/2 hours, and the crewmen reentered the lunar module at a mission time of 111-1/2 hours.

After a rest period, ascent preparation was conducted and the ascent stage lifted off the surface at 124-1/4 hours from earth launch. A nominal firing of the ascent engine placed the vehicle into a 45- by 9-mile orbit. After a rendezvous sequence similar to that performed on Apollo 10, the two spacecraft were docked at the mission time of 128 hours. After transfer of the crew and samples to the command and service module, the ascent stage was jettisoned, and the command and service module was prepared for transearth injection.

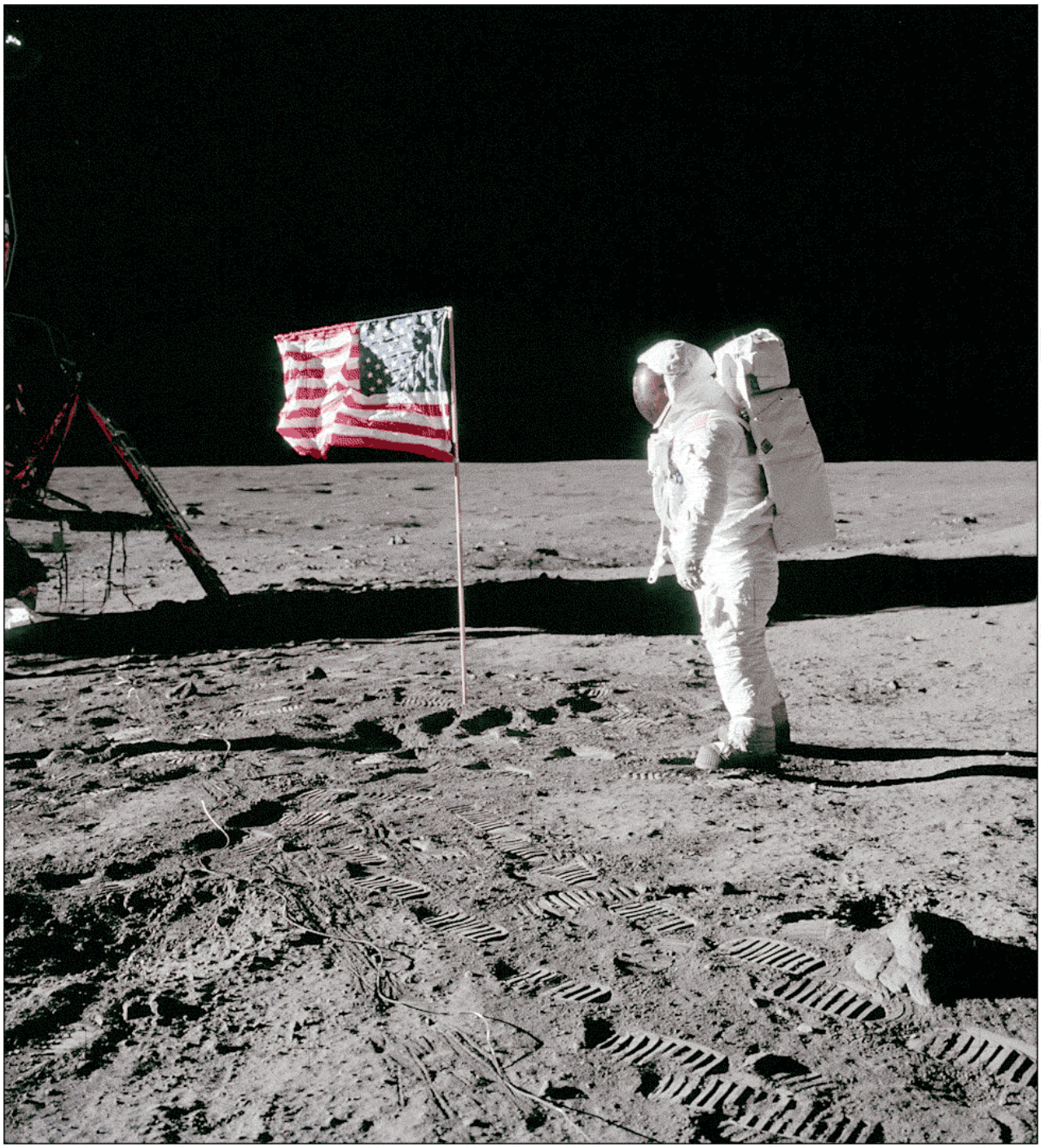

Figure 2-15.- Apollo 11 Lunar Module Pilot on the Lunar surface

The return flight started with a 150-second firing of the service propulsion engine during the 31st lunar revolution at 135-1/2 hours into the mission. As in translunar flight, only one midcourse correction was required, and passive thermal control was exercised for most of the transearth coast. Because of inclement weather in the planned recovery area, the landing point was moved 215 miles down range. The service module was separated from the command module 15 minutes before reaching the entry interface altitude of 400 000 feet. Following an automatic entry sequence and landing system deployment, the command module landed in the Pacific Ocean after a flight duration of 195 hours 18 minutes 35 seconds. The landing coordinates, as determined from the spacecraft computer, were latitude 13°19' N. and longitude 169°9' W.

After landing, the crew donned biological isolation garments; they were then retrieved by helicopter and taken to the primary recovery ship, the U.S.S. *Hornet*. The crew and lunar material samples were placed in a mobile quarantine facility for transport to the Lunar Receiving Laboratory in Houston.

All spacecraft systems performed satisfactorily and, with the completion of the Apollo 11, mission, the national objective of landing men on the moon and returning them safely to earth, before the end of the decade, was accomplished. Additional information on the Apollo 11 mission is given in references 2-16 and 2-17.

### 2.4.7 Apollo 12 Mission

Apollo 12, the second lunar landing mission, demonstrated the capability to land at a precise point and on a rough lunar surface. The landing location was in the Oceanus Procellarum (Ocean of Storms) region. The primary objectives assigned were (1) to perform selenological inspection, survey, and sampling in a mare area; (2) to deploy the Apollo lunar surface experiments package; (3) to develop techniques for a point landing capability; (4) to develop further man's capability to work in the lunar environment; and (5) to obtain photographs of candidate exploration sites.

The space vehicle, with crewmen Charles Conrad, Jr., Commander; Richard F. Gordon, Jr., Command Module Pilot; and Alan L. Bean, Lunar Module Pilot, was launched from Kennedy Space Center Launch Complex 39A at 11:22:00 a.m. e.s.t. (16:22:00 G.m.t.) on November 14, 1969. The activities during earth-orbit checkout, translunar injection, and translunar coast were similar to those of Apollo 11, except for the special attention given to verifying all spacecraft systems as a result of lightning strikes on the space vehicle at 36.5 seconds and again at 52 seconds after launch. A non-free-return translunar trajectory profile was used for the first time in the Apollo program.

The docked command and service module and lunar module were inserted into a 168.8- by 62.6-mile lunar orbit at approximately 83-1/2 hours into the mission. Two revolutions later, a second maneuver was performed to achieve a 66.1- by 54.3-mile orbit. At approximately 104 hours after launch, the Commander and the Lunar Module Pilot entered the lunar module to prepare for descent to the lunar surface. About 4 hours later, the two spacecraft were undocked and descent orbit insertion was performed. A precision landing was accomplished through automatic guidance, with small manual corrections applied in the final phases of descent. The spacecraft touched down 110 hours 32 minutes 36 seconds into the mission, with landing coordinates of latitude 3°11'51" S. and longitude 23°23'8" W. (ref. 2-18). One objective of the Apollo 12 mission was to achieve a precision landing near the Surveyor III spacecraft, which had landed on April 20, 1967. The Apollo 12 landing point was 535 feet from the Surveyor III.

Three hours after landing, the crewmen began preparations for egress. As the Commander descended the ladder to the lunar surface, he deployed the modularized equipment stowage assembly which automatically activated a color television camera and permitted his actions to be televised to earth. The television camera was subsequently damaged. After the Lunar Module Pilot had descended to the surface, he erected a solar wind composition experiment. Both crewmen then deployed the first Apollo lunar surface experiments package. On the return traverse, the crew collected a core-tube sample and additional surface samples. The first extravehicular activity period lasted 4 hours.

The second extravehicular activity period began after a 7-hour rest period. Documented samples, core-tube samples, trench-site samples, and gas-analysis samples were collected on a traverse to the Surveyor III spacecraft. The crew photographed and removed parts from the Surveyor (fig. 2-16). After the return traverse, the crew retrieved the solar wind composition experiment. The second extravehicular activity period lasted 3-3/4 hours. Crew mobility and portable life support system operation, as in Apollo 11, were excellent throughout both extravehicular periods. The Surveyor parts and approximately 34 kilograms of lunar material were returned to earth.

The lunar module ascent stage lifted off the lunar surface at a mission elapsed time of 142 hours. After a nominal rendezvous sequence, the two spacecraft were docked at 145-1/2 hours into the mission. The ascent stage, jettisoned after crew and sample transfer to the command module, was maneuvered by remote control to impact on the lunar surface; impact occurred at a mission time of 150 hours approximately 40 miles from the Apollo 12 landing site. Extensive landmark tracking and photography from lunar orbit was then conducted using a 500-mm long-range lens to obtain mapping and training data for future missions. At 172-1/2 hours into the mission, transearth injection was accomplished by using the service propulsion system engine.

Two small midcourse corrections were executed during transearth coast. The entry sequence was normal, and the command module landed in the Pacific Ocean. The landing coordinates, as determined from the onboard computer, were latitude 15°52' S. and longitude 165°10' W. Duration of the mission was 244 hours 36 minutes 25 seconds. After landing, biological isolation precautions similar to those of Apollo 11 were taken. The crew, the lunar material samples, and the spacecraft were subsequently transported to the Lunar Receiving Laboratory.

All spacecraft systems operated satisfactorily, and all primary mission objectives were accomplished. Additional information concerning the Apollo 12 mission is contained in references 2-19 and 2-20.

### 2.4.8 Apollo 13 Mission

Apollo 13, planned as the third lunar landing mission, was aborted during translunar flight because of the loss of all the oxygen stored in two tanks in the service module. The primary objectives assigned to the mission were (1) to perform selenological inspection, survey, and sampling of materials in a preselected region of the Fra Mauro formation; (2) to deploy and activate an Apollo lunar surface experiments package; (3) to develop further man's capability to work in the lunar environment; and (4) to obtain photographs of candidate exploration sites.

The launch vehicle and spacecraft were similar to those of Apollo 12; however, the experiment complement was somewhat different. The crewmembers were James A. Lovell, Jr., Commander; Fred W. Haise, Jr., Lunar Module Pilot; and John L. Swigert, Jr., who had been the backup Command Module Pilot until the day before launch. Because the prime Command Module Pilot had been exposed to German measles 8 days before the scheduled launch date and was shown during his preflight physical examination to be susceptible to the disease, the decision was made to replace him with the backup pilot as a precautionary measure.

The space vehicle was launched from Kennedy Space Center Launch Complex 39A at 02:13:00 p.m. e.s.t. (19:13:00 G.m.t.) on April 11, 1970. During the launch, the second-stage inboard engine shut down early because of high-amplitude longitudinal oscillations; however, near-nominal trajectory parameters were achieved at orbital insertion. The earth orbital, translunar injection, and early translunar coast phases of flight were normal, and operations during these periods were similar to those of Apollo 11 and Apollo 12 with one exception. On previous lunar missions, the S-IVB stage had been maneuvered by ground command into a trajectory such that it would pass by the moon and go into a solar orbit. For Apollo 13, the S-IVB was targeted to hit the moon so that the vibrations resulting from the impact could be sensed by the Apollo 12 seismic station and telemetered to earth for study. The S-IVB impacted the lunar surface about 78 hours after launch, approximately 140 kilometers west-northwest of the Apollo 12 experiment station. The impact point was very close to the desired target.

Photographs of the earth were taken during the early part of translunar coast to support an analysis of atmospheric winds. After approximately 31 hours of flight, a midcourse correction lowered the closest point of spacecraft approach to the moon to an altitude of approximately 60 miles. Before this maneuver, the spacecraft had been on a free-return trajectory, that is, one

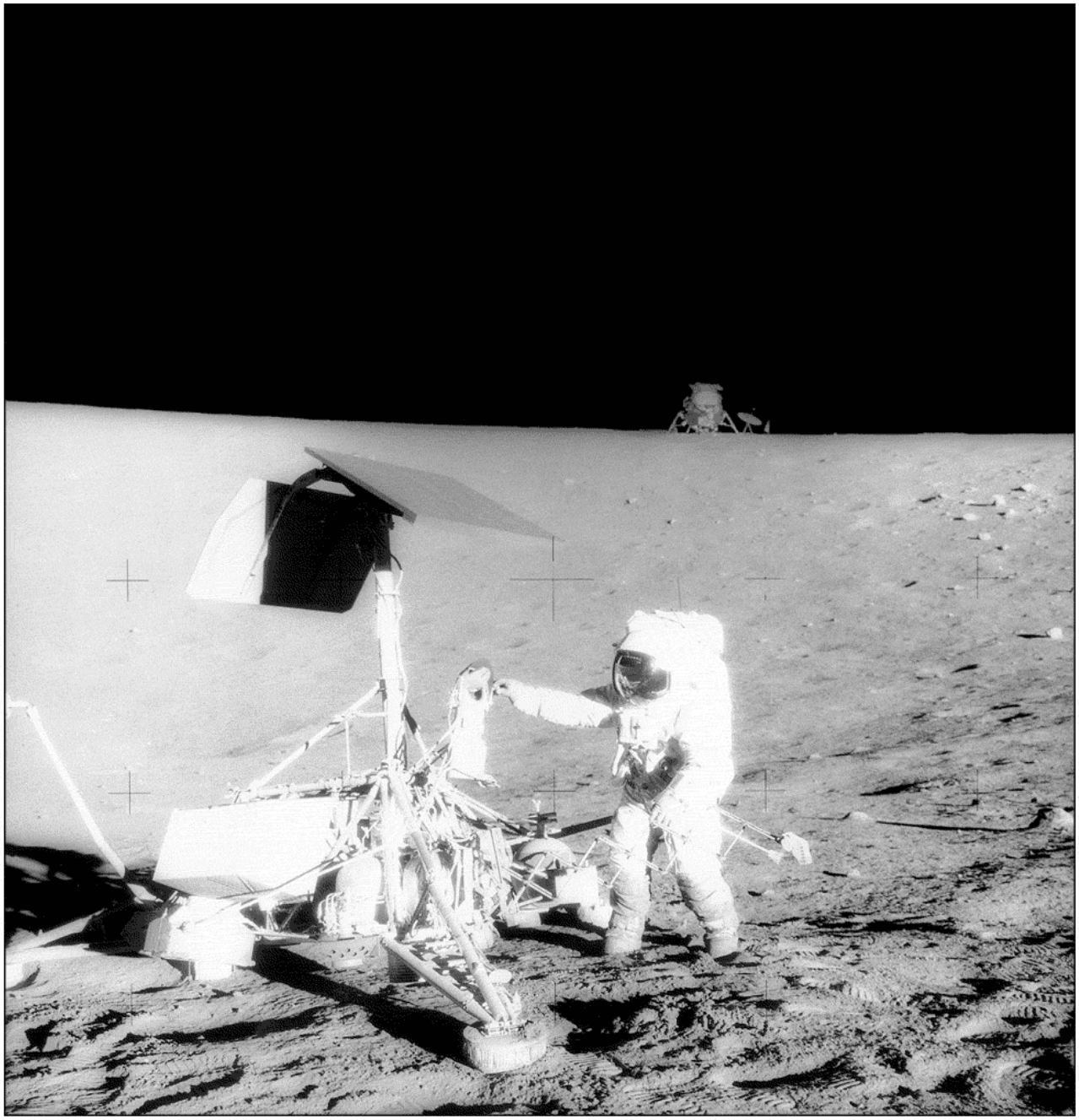

Figure 2-16.- Apollo 12 Commander examining Surveyor III spacecraft with lunar module in background.

on which the spacecraft would have looped around the moon and returned to earth without requiring a major maneuver. At approximately 56 hours, one of the two cryogenic oxygen tanks in the service module failed. (The cause of the failure is discussed in ref. 2-21.) The immediate result was that the oxygen in the failed tank was abruptly lost. Later, it was discovered that the panel had been blown off the bay in which the tank was located (fig. 2-17). The oxygen system with which the second tank was associated also lost pressure, but at a slower rate. These tanks contained most of the oxygen for breathing in the command module and the oxygen for the fuel cells (the primary source of electrical power). Sufficient oxygen remained in the second tank to maintain primary electrical power in the command and service module for approximately 2 hours, which gave the crew time to power up the lunar module, align the inertial reference platform, and shut down the command and service module systems. The docked spacecraft were then maneuvered back into a free-return trajectory using the lunar module descent engine.

From this point on, all systems in both vehicles were powered down except when absolutely required. With no further maneuvers, the command module could have landed in the Indian Ocean at 152 hours mission elapsed time, and the lunar module systems would have been required to support the crew for about 90 hours. However, because consumables were extremely marginal under these conditions and because only minimal recovery support existed in the Indian Ocean, a transearth injection maneuver using the lunar module descent propulsion system was executed to speed up the return to earth after the docked spacecraft had swung around the far side of the moon. Because of this maneuver, the landing was predicted to occur at about 143 hours mission elapsed time in the South Pacific, where primary recovery support was available. Guidance errors during the transearth injection maneuver necessitated a small transearth midcourse correction at approximately 105 hours to bring the projected entry flight-path angle within the specified limits. During the transearth coast period, the docked spacecraft were maneuvered into a passive thermal control mode.

The unprecedented powered-down state of the command module required several new procedures for entry. The command module was briefly powered up to assess the operational capability of critical systems. Also, the command module entry batteries were charged through the umbilical connectors that had supplied any necessary power from the lunar module while the command module was powered down. Approximately 6 hours before entry, the passive thermal control mode was discontinued, and a final midcourse correction was made using the lunar module reaction control system to refine the flight-path angle slightly.

The service module was separated 4-3/4 hours before entry; the separation afforded the crew an opportunity to observe and photograph the damage caused by the failed oxygen tank. The lunar module was retained until 70 minutes before entry to minimize usage of command module electrical power. At undocking, normal tunnel pressure provided the necessary force to separate the two spacecraft. From this point, the events were similar to those of previous flights, and the command module landed approximately 1 mile from the target point. Some pieces of the lunar module survived entry and projected trajectory data indicated that they impacted in the open sea between Samoa and New Zealand. The three crewmen were on board the recovery ship, the U.S.S. *Iwo Jima*, within 45 minutes of landing. Reference 2-22 contains details of the Apollo 13 mission.

### 2.4.9 Apollo 14 Mission

Apollo 14 was the third mission to achieve a lunar landing. The landing site was located in the Fra Mauro highlands, the same area that was to have been explored on Apollo 13. Although the primary mission objectives for Apollo 14 were the same as those of Apollo 13, provisions were made for returning a significantly greater quantity of lunar material and scientific data than had been possible previously. An innovation that allowed an increase in the range of lunar surface exploration and in the amount of material collected was the provision of a collapsible two-wheeled cart, the modular equipment transporter, for carrying tools, cameras, a portable magnetometer, and lunar samples (fig. 2-18).

An investigation into the cause of the Apollo 13 cryogenic oxygen tank failure led to three significant changes in the command and service module cryogenic oxygen storage and electrical power systems. The internal construction of the oxygen tanks was modified, a third oxygen tank was added, and an auxiliary battery was installed. These changes were also incorporated into all subsequent spacecraft.

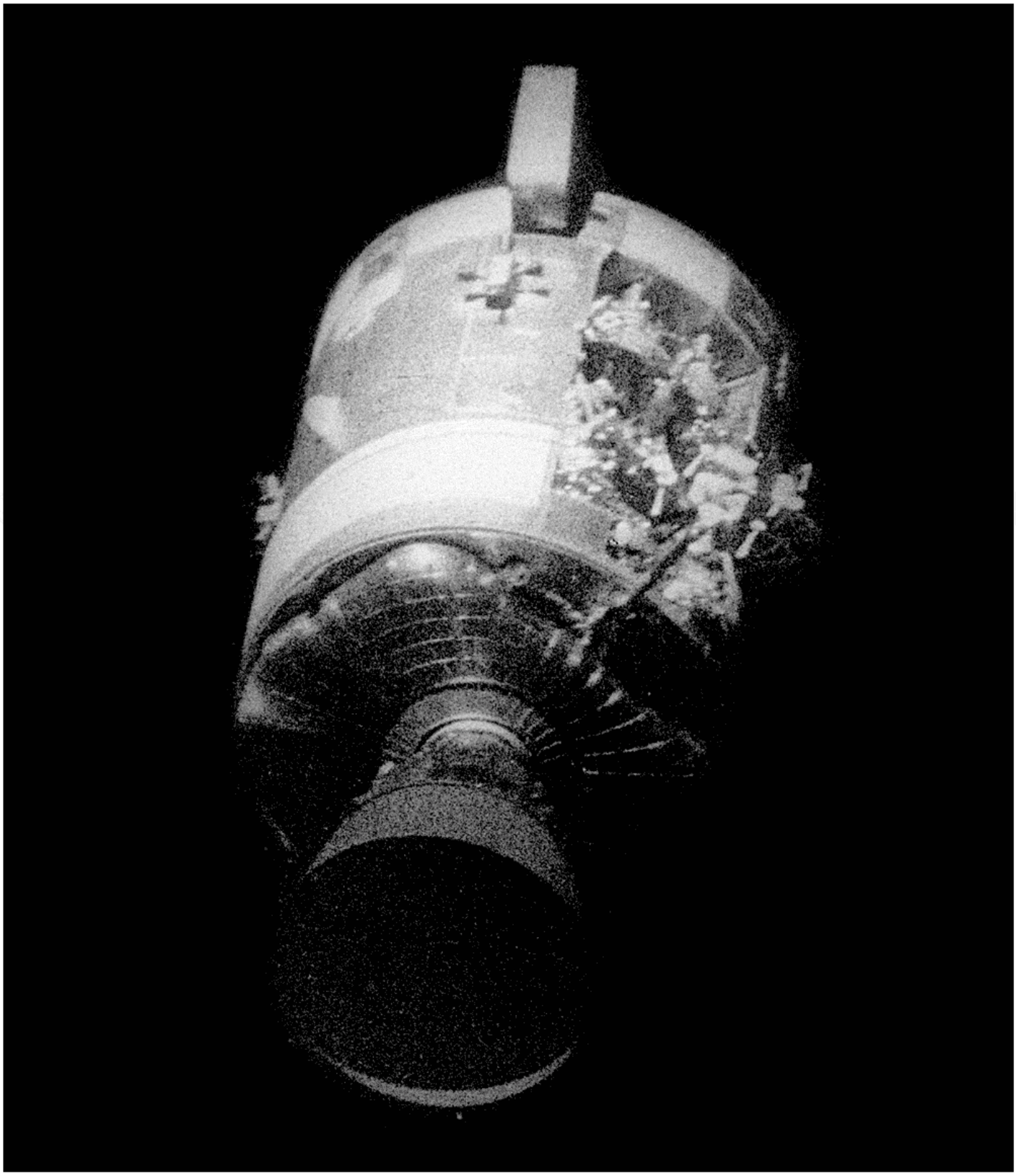

Figure 2-17.- Photograph of damaged service module taken during Apollo 13 mission.

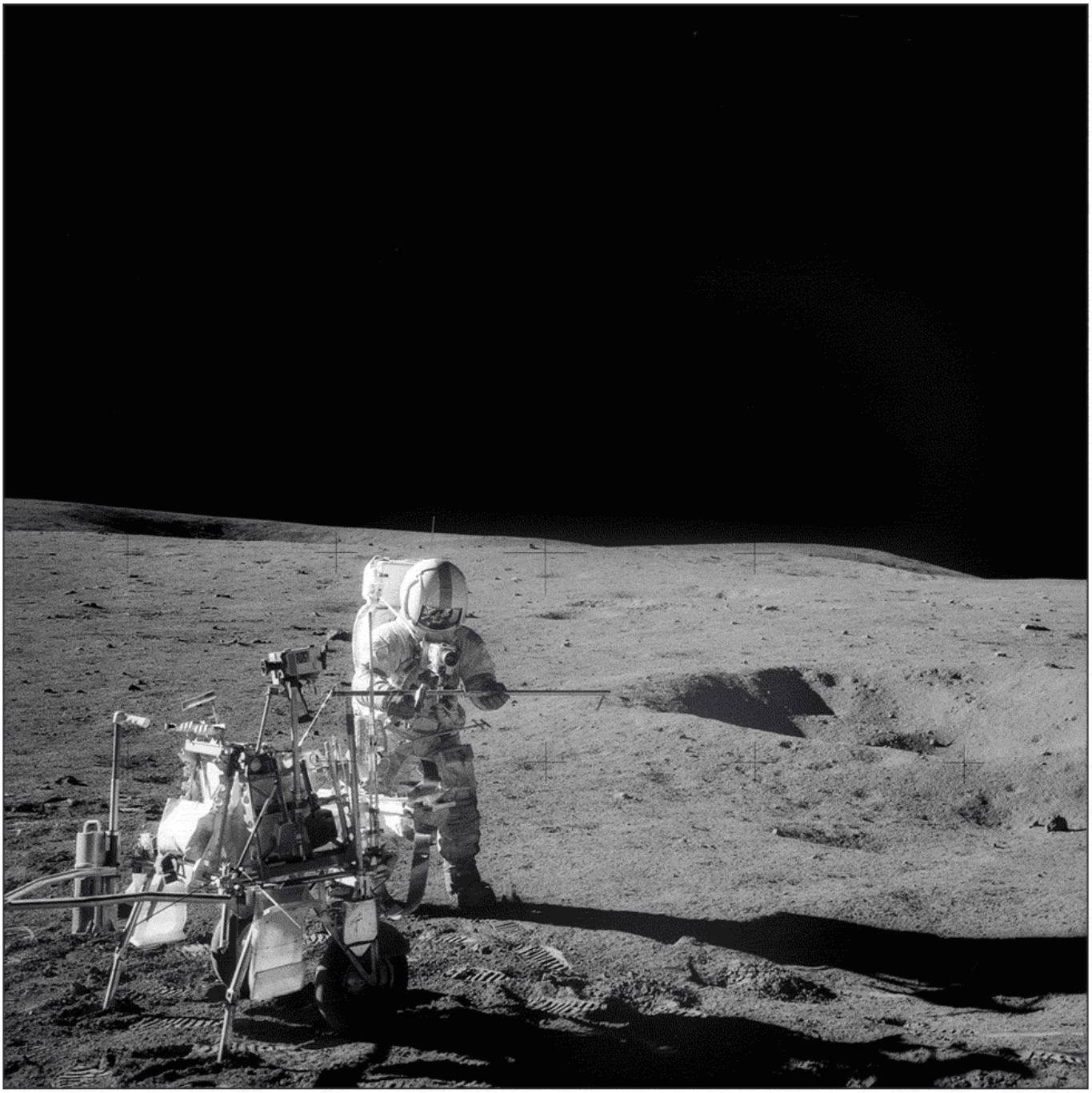

Figure 2-18.- Apollo 14 lunar surface extravehicular activity.

The mission, manned by Alan B. Shepard, Jr., Commander; Stuart A. Roosa, Command Module Pilot; and Edgar D. Mitchell, Lunar Module Pilot, was launched from Kennedy Space Center Launch Complex 39A at 04:03:02 p.m. e.s.t. (21:03:02 G.m.t.) on January 31, 1971. Because of weather conditions which might have triggered lightning, the launch was delayed approximately 40 minutes. The operations in earth orbit and translunar injection were similar to those of previous lunar missions; however, after translunar injection, several docking attempts were made before the command and service module was successfully docked with the lunar module.

As on Apollo 13, the S-IVB stage was targeted to impact the moon within a prescribed area to supply seismic data. The vehicle struck the lunar surface approximately 160 miles from the target, within the desired area, at 82:37:52 mission elapsed time. The Apollo 12 seismic station, located approximately 94 miles southwest of the impact point, recorded the event 37 seconds later and responded to vibrations for more than 3 hours.

Translunar activities included star and earth horizon calibration sightings in preparation for a cislunar navigation exercise to be performed during transearth coast, and dim-light photography of the earth. At approximately 61 hours, the lunar module crew spent approximately 2 hours in the lunar module cabin for housekeeping and systems checkout. While there, the crew photographed a waste-water dump from the command module to obtain data for a particle contamination study being conducted for the Skylab program. Two spacecraft translunar midcourse corrections achieved the trajectory desired for lunar-orbit insertion.

The joined spacecraft were inserted into a 169- by 58-mile lunar orbit with the service propulsion system. After two revolutions, the same propulsion system was used to insert the spacecraft into the descent orbit, which brought the docked vehicles to within 10 miles of the lunar surface. On previous missions, the descent orbit insertion maneuver had been performed with the lunar module descent propulsion system. A change was made on this mission to allow a greater margin of lunar module propellant for landing in a more rugged area.

The Commander and Lunar Module Pilot entered the lunar module, performed systems checks, and undocked during the 12th lunar revolution. After vehicle separation and before powered descent, ground personnel detected the presence of an abort command at a computer input channel although the crew had not depressed the abort switch. The failure was isolated to the abort switch, and, to prevent an unwanted abort, a workaround procedure was developed. The procedure was followed, and the powered descent was performed successfully. The vehicle touched down 12 minutes 45 seconds after engine ignition and came to rest on a slope of about 7 degrees. Sufficient propellant remained for approximately 70 additional seconds of engine firing time. The coordinates of the landing site are latitude 3°40'24" S. and longitude 17°27'55" W. based upon reference 2-23.

After undocking and separation, the command-and-service-module orbit was circularized to an altitude of approximately 60 miles. While the landing crew was on the lunar surface, the Command Module Pilot performed tasks to obtain data for scientific analyses and future mission planning. These tasks included orbital science photography of the lunar surface, photography of the proposed Descartes landing site for site selection studies, photography of the lunar surface under high-sun-angle lighting conditions for operational planning, photography of low-brightness astronomical light sources, and photography of the Gegenschein and Moulton Point regions.

Preparations for the initial period of lunar surface exploration began approximately 2 hours after landing, and the crew egressed about 5-1/2 hours after landing. During the 4-3/4-hour extravehicular period, the crew deployed and loaded the modular equipment transporter; collected samples; photographed activities, panoramas, and equipment; and deployed the second Apollo lunar surface experiments package.

After a rest period of approximately 6-1/2 hours, the crew prepared to travel to the area of Cone Crater, approximately 1.3 kilometers east-northeast of the landing site. Although the crew experienced difficulties in navigating, they reached a point within approximately 15 meters of the rim of the crater, and the objectives associated with reaching the vicinity of this crater were achieved. Various rock and soil samples were collected near Cone Crater, and, on the return to the lunar module, the crew also obtained magnetometer measurements at two sites along the traverse. This second extravehicular period lasted approximately 4-1/2 hours for a total extravehicular time of approximately 9-1/4 hours. Approximately 43 kilograms of lunar samples were collected during the two periods.

The lunar module ascent stage lifted off after a surface stay time of 33-1/2 hours, and the vehicle was inserted into a 51.7- by 8.5-mile orbit. A direct rendezvous was performed (the first use of a direct rendezvous in the Apollo program), and the command-module-active docking operations were normal. After crew and sample transfer to the command module, the ascent stage was jettisoned and a pre-programmed maneuver caused lunar impact approximately 36 miles west of the Apollo 14 landing site. On previous lunar missions, lunar surface dust adhering to equipment being returned to earth had created a problem. Special dust control procedures used on this mission, however, effectively decreased the amount of dust in the cabins.

Transearth injection occurred during the 34th lunar revolution. During transearth coast, one midcourse correction was made using the service module reaction control system. In addition, a special oxygen flow-rate test was performed to evaluate the system for planned extravehicular activities on subsequent flights, and a navigation exercise simulating a return to earth without ground control was conducted using only the guidance and navigation system. Inflight demonstrations of electrophoretic separation, liquid transfer, heat flow and convection, and composite casting under zero-gravity conditions were also performed and televised to earth.

Entry was normal and the command module landed in the Pacific Ocean at 216:01:58 mission elapsed time. The crewmen were retrieved by helicopter and were aboard the primary recovery ship, U.S.S. *New Orleans*, approximately 48 minutes after landing.

As was the case following the Apollo 11 and Apollo 12 missions, the Apollo 14 crew and lunar samples were isolated and tests conducted to assure that they were not biologically hazardous. The test protocols showed no evidence of lunar micro-organisms at the three sites explored, and this was considered to be sufficient justification for discontinuance of the quarantine procedures.

All of the objectives and experiment operations were accomplished satisfactorily except for some desired photography that could not be obtained. Details of the mission are given in reference 2-24 and preliminary scientific results in reference 2-25.

### 2.4.10 Apollo 15 Mission

Apollo 15 was the first of the three J missions (appendix B) designed to conduct exploration of the moon over longer periods, over greater ranges, and with more instruments for scientific data acquisition than on previous Apollo missions. Major modifications and augmentations to the basic Apollo hardware were made. The most significant change was the installation of a scientific instrument module in one of the service module bays for scientific investigations from lunar orbit. Other hardware changes consisted of lunar module modifications to accomodate a greater payload and permit a longer stay on the lunar surface, and the provision of a lunar roving vehicle (fig. 2-19). The landing site chosen for the mission was an area near the foot of the Montes Apenninus (Apennine Mountains) and adjacent to Hadley Rille. The primary objectives assigned to the Apollo 15 mission were: (1) to perform selenological inspection, survey, and sampling of materials and surface features in a preselected area of the Hadley-Apenninus region; (2) to emplace and activate surface experiments; (3) to evaluate the capability of the Apollo equipment to provide extended lunar surface stay time, increased extravehicular operations, and surface mobility; and (4) to conduct inflight experiments and photographic tasks from lunar orbit.

The space vehicle was launched from the Kennedy Space Center Launch Complex 39A at 09:34:00.6 a.m. e.d.t. (13:34:00.6 G.m.t.) on July 26, 1971. The spacecraft was manned by David R. Scott, Commander; Alfred M. Worden, Command Module Pilot; and James B. Irwin, Lunar Module Pilot. The spacecraft/S-IVB combination was inserted into an earth parking orbit approximately 11 minutes 44 seconds after lift-off. The S-IVB restart for translunar injection was initiated during the second revolution at approximately 2 hours 50 minutes mission elapsed time. The maneuver placed the spacecraft/S-IVB combination on a translunar trajectory that would allow return to an acceptable earth-entry corridor using the service module reaction control system engines. Approximately 27 minutes after injection into the translunar trajectory, the command and service module was separated from the S-IVB and docked with the lunar module. The lunar module was then extracted from the spacecraft/launch vehicle adapter. Shortly thereafter, the S-IVB tanks were vented and the auxiliary propulsion system was fired to target the S-IVB for a lunar impact. The impact of the S-IVB stage was sensed by the Apollo 12 and 14 lunar surface seismometers.

Figure 2-19.- Apollo 15 Lunar Module Pilot working at the lunar roving vehicle

The docked spacecraft were inserted into a lunar orbit of approximately 170 by 57 miles and about 4 hours later, injected into a 58- by 10-mile orbit. Lunar module undocking and separation were performed at approximately 100 hours 39 minutes into the mission. The command and service module was then placed in a near-circular lunar orbit in preparation for the acquisition of scientific data.

The lunar module touched down on the lunar surface approximately 1800 feet from the planned target point at 104 hours 42 minutes 29 seconds after lift-off. The landing point was latitude 26°6'3" N. and longitude 3°39'10" E. based on the coordinates of reference 2-26. Sufficient descent stage propellant remained after lunar touchdown to have provided a hover time capability of about 103 seconds.

Approximately 2 hours after landing, the Commander photographed and described the area surrounding the landing site by standing in the open top hatch. This extravehicular activity period lasted approximately 33 minutes. The first lunar surface extravehicular activity was initiated about 12-1/2 hours later. During the surface operations, the crew collected and stowed a contingency sample, deployed the lunar roving vehicle, unstowed the third Apollo lunar surface experiments package and other equipment, and configured the lunar roving vehicle for lunar surface operations. Some problems were experienced in deploying and checking out the lunar roving vehicle, but these problems were worked out. The crew then drove the vehicle to Elbow Crater where they collected and documented samples and gave an enthusiastic and informative commentary on lunar features. The Mission Control Center provided television control during various stops. After obtaining additional samples and photographs near St. George Crater, the crew returned to the lunar module using the lunar roving vehicle navigation system. The distance driven was approximately 10.3 kilometers. The crew then proceeded to the selected Apollo lunar surface experiments package deployment site, approximately 110 meters west-northwest of the lunar module. There, the experiments were deployed essentially as planned, except that the second heat-flow experiment probe was not emplaced because drilling was more difficult than expected and the hole was not completed. The first extravehicular activity lasted approximately 6 hours 33 minutes.

The crew spent approximately 16 hours in the cabin between the first and second extravehicular periods. On egress for the second extravehicular activity, the lunar roving vehicle was checked out and prepared for the second traverse. The first stage of the 12.5-kilometer round trip was south to the Apennine front, but east of the first traverse. Stops were made at Spur Crater and other points along the base of the front, as well as at Dune Crater on the return trip. The return route closely followed the outbound route. Documented samples, a core sample, and a comprehensive sample were collected, and photographs were taken. After reaching the lunar module, the crew returned to the experiments package site where the Commander completed drilling the second hole for the heat flow experiment and emplaced the probe. During this period, the Lunar Module Pilot performed soil mechanics tasks. The Commander also drilled to obtain a deep-core sample but terminated the drilling because of time constraints. The crew then returned to the lunar module and deployed the United States flag. The second extravehicular activity ended after approximately 7 hours 12 minutes.

The crew spent almost 14 hours in the cabin after the second extravehicular period. The third extravehicular activity began later than originally planned to allow additional time for crew rest. Because of this delay and later delays at the experiments package site, the planned trip to the North Complex was deleted. The first stop was at the experiments package site to retrieve the deep-core sample. Two core sections were disengaged, but the drill and the remaining four sections could not be separated and were left for later retrieval. The third geologic traverse took a westerly direction and included stops at Scarp Crater, Rim Crater, and the Terrace, an area along the rim of Hadley Rille. Extensive samples and a double-core-tube sample were obtained. Photographs were taken of the west wall of Hadley Rille, where exposed layering was observed. The return trip was east toward the lunar module with a stop at the experiments package site to retrieve the remaining sections of the deep-core sample. One more section was separated, and the remaining three sections were returned in one piece. After returning to the lunar module, the lunar roving vehicle was unloaded and parked for ground-controlled television coverage of the lunar module ascent. A distance of approximately 5.1 kilometers was traveled during the third extravehicular activity, which lasted approximately 4 hours 50 minutes. The total distance traveled with the lunar roving vehicle during the three extravehicular periods was 27.9 kilometers, and the total weight of lunar samples collected was approximately 77 kilograms. The areas traversed on the lunar surface are illustrated in section 3.2.1

While the lunar module was on the surface, the Command Module Pilot completed 34 lunar orbits conducting scientific instrument module experiments and operating cameras to obtain data concerning the lunar surface and the lunar environment. Some scientific tasks accomplished during this time were photographing the sunlit lunar surface, gathering data needed for mapping the bulk chemical composition of the lunar surface and for determining the geometry of the moon along the ground track, visually surveying regions of the moon to assist in identifying processes that formed geologic features, obtaining lunar atmospheric data, and surveying gamma-ray and X-ray sources. High-resolution photographs were obtained with the panoramic and mapping cameras during the mission.

The ascent stage lifted off after 66 hours 54 minutes 53 seconds on the lunar surface. The mission elapsed time of lift-off was 171 hours 37 minutes 23 seconds. A nominal lunar-module-active rendezvous was performed followed by docking at approximately 173 hours 36 minutes.

The lunar module ascent stage was jettisoned at approximately 179 hours 30 minutes into the mission. Jettison had been delayed one revolution later than planned because of some difficulty with verifying the spacecraft tunnel sealing and astronaut pressure suit integrity. Approximately 1-1/2 hours later, the lunar module was deorbited with lunar impact occurring at latitude 26°21' N. and longitude 0°15' E. Impact was approximately 23-1/2 kilometers from the planned point and approximately 93 kilometers west of the Apollo 15 landing site. The impact was recorded by the Apollo 12, 14, and 15 lunar surface seismic stations.

Before the command and service module was maneuvered from lunar orbit, a subsatellite was deployed in an orbit of approximately 76 by 55 miles. The subsatellite was instrumented to measure plasma and energetic-particle fluxes, vector magnetic fields, and subsatellite velocity from which lunar gravitational anomalies could be determined. All systems operated as expected. The transearth injection maneuver was initiated approximately 223 hours 49 minutes into the mission.

At a mission time of approximately 242 hours, a transearth coast extravehicular activity began. Television coverage was provided for the 39-minute extravehicular period during which the Command Module Pilot retrieved film cassettes and examined the scientific instrument module for possible abnormalities. Total extravehicular time during the mission was 19 hours 47 minutes.

A small midcourse correction of 5.6 feet per second was performed at the seventh midcourse correction opportunity. The command module was separated from the service module as planned, and a normal entry followed with the spacecraft being observed on the main parachutes from the recovery ship, U.S.S. *Okinawa*. During the descent, one of the three main parachutes failed, but a safe landing was made. The best estimate of the landing coordinates was latitude 26°7'48" N. and longitude 158°8'24" W., approximately 1 mile from the planned landing point. The crew was brought on board the recovery ship by helicopter about 39 minutes after landing. Duration of the mission was 295 hours 11 minutes 53 seconds.

The mission accomplished all primary objectives and provided scientists with a large amount of new information concerning the moon and its characteristics. References 2-27 and 2-28 provide details on the performance of the systems and the preliminary results of the experiments.

### 2.4.11 Apollo 16 Mission

Apollo 16 was the second in the series of lunar landing missions designed to optimize the capability for scientific return. The vehicles and payload were similar to those of Apollo 15. Primary objectives assigned were (1) to perform selenological inspection, survey, and sampling of materials and surface features in a preselected area of the Descartes region of the moon; (2) to emplace and activate surface experiments; and (3) to conduct inflight experiments and photographic tasks.

The space vehicle was launched from Kennedy Space Center Launch Complex 39A at 12:54:00 p.m. e.s.t. (17:54:00 G.m.t.) on April 16, 1972. The crewmen for the mission were John W. Young, Commander; Thomas K. Mattingly II, Command Module Pilot; and Charles M. Duke, Jr., Lunar Module Pilot. The launch was normal, and the spacecraft, the launch vehicle third stage (S-IVB), and the instrument unit were inserted into earth orbit for systems checkout before the vehicle was committed to translunar flight. The launch sequence was similar to that described previously for a Saturn V launch.

Translunar injection was initiated during the second revolution in earth orbit. The spacecraft separation, transposition, docking, and ejection operations were performed successfully, and, on ground command, the S-IVB was maneuvered to reduce the probability of recontact with the spacecraft. Approximately 20 minutes later, the propulsive force from a liquid-oxygen dump was used to target the S-IVB for impact on the moon near the Apollo 12 landing site. As on the three previous missions, S-IVB impact was desired to produce seismic vibrations that could be used to study the nature of the lunar interior structure. Although launch vehicle systems malfunctions precluded a planned trajectory refinement, the impact point was within the desired area. However, loss of S-IVB stage telemetry prevented establishment of the precise time of impact, thereby making the interpretation of seismic data uncertain.

During translunar coast, a false gimbal lock warning was issued by the command module computer. To prevent the inertial platform from being caged during critical operations, a procedure was developed to inhibit the computer from responding to the false indications. Activities during translunar coast included a navigation exercise, ultraviolet photography, a demonstration of the effects of zero gravity on the process of electrophoresis, and the first of two sessions to acquire data to be used in trying to determine the mechanisms involved in the production of light flashes seen by some crewmen on previous flights.

The crew inserted the docked spacecraft into lunar orbit by firing the service propulsion system engine in the retrograde direction. The initial 170- by 58-mile orbit was maintained for two revolutions. The crew then inserted the spacecraft into a descent orbit that took them within approximately 10 miles of the surface. After three revolutions the lunar module crew undocked and separated the spacecraft in preparation for the lunar landing. Figure 2-20 shows the lunar module just after undocking.

As the Command Module Pilot prepared to transfer his spacecraft to a circular lunar orbit, oscillations were detected in a secondary system that controlled the direction of thrust of the service propulsion system engine. The spacecraft was maneuvered to place it close to the lunar module while the problem was being evaluated. Tests and analyses showed that the system was still usable and safe; therefore, the vehicles were separated again, and the mission continued on a revised time line. The command and service module circularization maneuver was performed successfully with the primary system.

After devoting approximately 5-3/4 hours to evaluation of the secondary control system problem, powered descent of the lunar module was initiated. The lunar module landed approximately 270 meters northwest of the planned landing site. The location of the landing site is latitude 8°59'29" S. and longitude 15°30'52" E. based on the coordinates of reference 2-29. Propellant for approximately 100 seconds of hover time remained at touchdown.

The first extravehicular activity was started after an 8-hour rest period. Television coverage of surface activity was delayed until the lunar roving vehicle systems were activated because the lunar module steerable antenna, used for initial lunar surface television transmission, remained locked in one axis and could not be used. The fourth lunar surface experiments package was deployed, but accidental breakage of the electronics cable rendered the heat flow experiment inoperative. After completing their activities at the experiments site, the crew drove the lunar roving vehicle west to Flag Crater where they made visual observations, photographed items of interest, and collected lunar samples. The inbound traverse route was just slightly south of the outbound route, and the next stop was Spook Crater. The crew then returned by way of the experiment station to the lunar module, at which time they deployed the solar wind composition experiment. The first extravehicular activity lasted approximately 7 hours 11 minutes, and the crew traveled approximately 4.2 kilometers in the lunar roving vehicle.

The second extravehicular traverse was south-southeast to a mare sampling area near the Cinco Craters on the north slope of Stone Mountain. The crew then drove in a northwesterly direction, making stops near Stubby and Wreck Craters. The last leg of the traverse was north to the experiments station and the lunar module. The second extravehicular activity lasted approximately 7 hours 23 minutes, and the crew traveled 11.1 kilometers in the lunar roving vehicle.

Four stations were deleted from the third extravehicular traverse because of time limitations. The crew first drove to the rim of North Ray Crater where photographs were taken and samples gathered, some from House Rock, the largest single rock seen during the extravehicular activities. The crew then drove southeast to the second sampling area, Shadow Rock. On completing activities there, the crew drove the vehicle back to the lunar module retracing the outbound

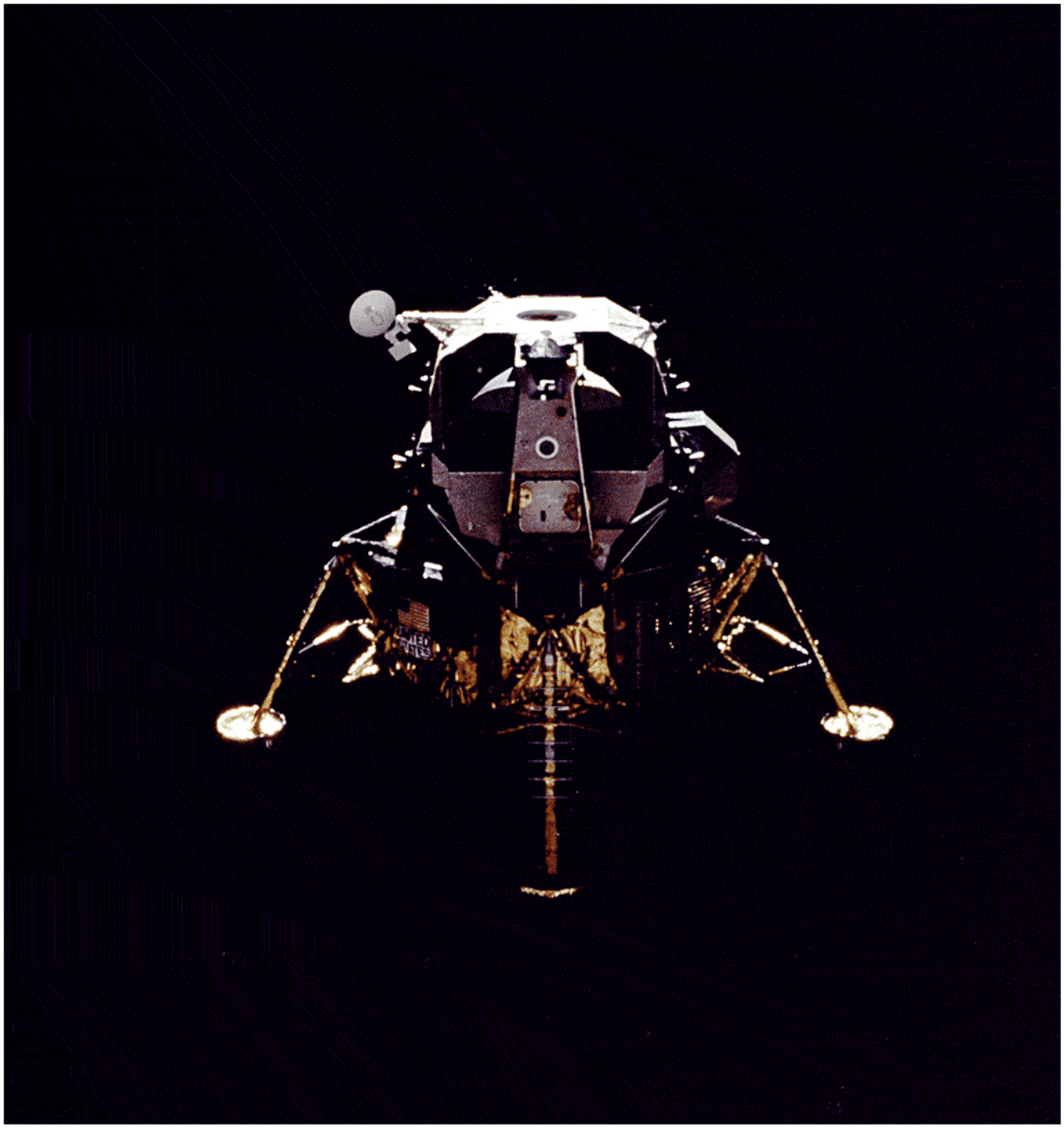

Figure 2-20.- Apollo 16 lunar module after undocking.

route. The third extravehicular activity lasted approximately 5 hours 40 minutes, and the distance traveled totaled 11.4 kilometers. The total weight of the lunar samples collected was 94 kilograms. The areas explored are described in greater detail in section 3.2.1.

While the lunar module crew was on the surface, the Command Module Pilot obtained photographs, measured physical properties of the moon, and made visual observations. Also the Command Module Pilot made comprehensive deep-space measurements, providing scientific data that could be used to validate findings from the Apollo 15 mission.

Lunar ascent, initiated after the crew had spent more than 71 hours on the lunar surface, was followed by normal rendezvous and docking. Attitude control of the lunar module ascent stage was lost at jettison; consequently, a deorbit maneuver was not possible. Analysis indicated that the ascent stage impacted the lunar surface before the Apollo 17 mission commenced; however, no data were available for substantiation.

A particles and fields subsatellite like that launched from Apollo 15 was launched into lunar orbit, and systems operation was normal. A planned spacecraft orbit shaping maneuver was not performed before ejection of the subsatellite; therefore, the subsatellite was placed in a nonoptimum orbit that resulted in a much shorter lifetime than planned. Loss of all subsatellite tracking and telemetry data on the 425th revolution (May 29, 1972) indicated that the subsatellite had impacted the lunar surface.

The mass spectrometer deployment boom stalled during a retract cycle and was, therefore, jettisoned before transearth injection. The second plane-change maneuver and some orbital science photography were deleted so that transearth injection could be performed approximately 24 hours earlier than originally planned.

Activities during the transearth coast phase of the mission included photography for a Skylab program study of the behavior and effects of particles emanating from the spacecraft, and the second light-flash observation session. During an extravehicular operation, the Command Module Pilot retrieved film cassettes from the scientific instrument module cameras, visually inspected the equipment, and exposed an experiment to provide data on microbial response to the space environment. Two midcourse corrections were made on the return flight to achieve the desired entry interface conditions.

Entry and landing sequences were normal. While on the drogue parachutes, the command module was viewed on television, and continuous coverage was provided through crew recovery. The spacecraft landed in the mid-Pacific near the planned target. Although the vehicle came to rest in the stable II attitude, it was uprighted in approximately 5 minutes. The crew was delivered on board the primary recovery ship, the U.S.S. *Ticonderoga*, 37 minutes after landing.

All of the primary mission objectives and most of the detailed objectives were met, even though the mission was terminated one day earlier than planned. Especially significant scientific data obtained were images and spectra of the earth's atmosphere and geocorona in the wavelength range below 1600 angstroms. Additional information about the Apollo 16 mission is contained in references 2-30 and 2-31.

### 2.4.12 Apollo 17 Mission

Apollo 17, the final Apollo mission, was the third in the series of lunar landing missions designed for maximum scientific return. As such, the spacecraft and launch vehicle were similar to those for Apollo 15 and 16. Some experiments included in the payload, however, were unique to this mission. The selected landing site was the Taurus-Littrow area.

The space vehicle was launched from Kennedy Space Center Launch Complex 39A at 12:33:00 a.m. e.s.t. (05:33:00 G.m.t.) on December 7, 1972, the only nighttime launch of an Apollo spacecraft (fig. 2-21). The crewmen for the flight were Eugene A. Cernan, Commander; Ronald E. Evans, Command Module Pilot; and Harrison H. Schmitt, Lunar Module Pilot.

The launch countdown had proceeded smoothly until 30 seconds before the scheduled ignition when a failure in the automatic countdown sequencer occurred and delayed the launch 2 hours 40

Figure 2-21.- Lift-off of Apollo 17 space vehicle.

minutes. A successful launch placed the S-IVB/spacecraft combination in a circular earth orbit in preparation for translunar injection. After ejection of the docked spacecraft, the S-IVB stage was maneuvered for lunar impact, which occurred approximately 84 miles from the planned point. The impact was recorded by the Apollo 12, 14, 15, and 16 passive seismometers.

Translunar coast time was shortened to compensate for the launch delay. Activities during translunar coast included a heat flow and convection demonstration, a continuation of the series of light-flash investigations conducted by previous crews, and a midcourse correction to achieve the desired altitude of closest approach to the lunar surface. The scientific instrument module door was jettisoned as planned approximately 4-1/2 hours before lunar orbit insertion. The insertion maneuver resulted in a 170- by 53-mile orbit. Approximately 5 hours later, the first of two descent orbit insertion maneuvers was performed lowering the orbit to 59 by 15 miles. The command and service module/lunar module combination were retained in this orbit approximately 17 hours before the spacecraft were undocked and separated. After undocking, the command and service module orbit was circularized; and the second lunar module descent orbit insertion maneuver was performed, lowering the pericynthion to approximately 6 miles. Powered descent was initiated from this orbit, and the lunar module landed within 200 meters of the preferred landing point. The landing site location is latitude 20°9'55" N. and longitude 30°45'57" E. based on the coordinates of reference 2-32. Approximately 117 seconds of hover time remained at engine shutdown.

The first extravehicular activity began 4 hours after landing. The lunar roving vehicle was off-loaded, equipment was unstowed, and the lunar surface experiments package was deployed approximately 185 meters west-northwest of the lunar module. At the experiments package deployment site, the Commander drilled two holes for heat-flow experiment probes and one deep-core hole. The crew sampled two geologic units, deployed two explosive packages, and took seven traverse gravimeter measurements during the extravehicular activity. The crew also collected samples weighing approximately 14 kilograms during the 7 hours 12 minutes of extravehicular activity.

The second extravehicular activity began at approximately 138 hours mission elapsed time. During the traverse, the extravehicular plan was modified to allow more time at points of geological interest. Three explosive packages were deployed in support of the lunar seismic profiling experiment and seven traverse gravimeter measurements were taken. Approximately 34 kilograms of samples were gathered during the 7 hours 37 minutes of extravehicular activity.

The crew commenced the third extravehicular activity after a 15-1/2-hour period in the lunar module. Specific sampling objectives were accomplished, and nine traverse gravimeter measurements were made. The surface electrical properties experiment was terminated because the receiver temperature was increasing to a level which could have affected the data tape. Consequently, the tape recorder was removed on the way back to the lunar module. Samples weighing approximately 62 kilograms were obtained during the 7-hour 15-minute extravehicular period for a total of approximately 110 kilograms for the mission. The lunar roving vehicle was driven about 34 kilometers during the three extravehicular activities. The total extravehicular time was 22 hours 4 minutes.

Numerous science activities were conducted in lunar orbit while the surface was being explored. In addition to the panoramic camera, the mapping camera, and the laser altimeter (which were used on previous missions), three new experiments were included in the service module. An ultraviolet spectrometer measured lunar atmospheric density and composition, an infrared radiometer mapped the thermal characteristics of the moon, and a lunar sounder acquired data on subsurface structure. The command and service module orbit did not decay as predicted while the lunar module was on the lunar surface. Consequently, a small orbital trim maneuver was performed to lower the orbit. In addition, a planned plane-change maneuver was made in preparation for rendezvous.

Lunar ascent was initiated after a surface stay time of almost 75 hours. Rendezvous and docking were normal; and, after transfer of samples and equipment from the ascent stage to the command module, the ascent stage was jettisoned and deorbited. The impact point was about 10 kilometers southwest of the Apollo 17 landing site. After spending an additional day in lunar orbit performing scientific experiments, the crew performed the transearth injection maneuver at the planned time.

During transearth coast, the Command Module Pilot conducted a 1-hour 6-minute extravehicular operation in which he retrieved film cassettes from the scientific instrument module bay. The crew later performed another light-flash experiment, operated the infrared radiometer and ultraviolet spectrometer, and made a transearth midcourse correction.

Entry and landing sequences were normal with the command module landing in the Pacific Ocean west of Hawaii, approximately 1 mile from the planned location. Apollo 17 was the longest mission of the program (301 hours 51 minutes 59 seconds) and brought to a close one of the most ambitious and successful endeavors of man. The Apollo 17 mission, the most productive and trouble-free lunar landing mission, represented the culmination of continual advancements in hardware, procedures, and operations. Reference 2-33 contains detailed information on the mission operations and hardware performance, and reference 2-34 has preliminary science results.

## 2.5 REFERENCES


2-1. Results of the Eighth Saturn I Launch Vehicle Test Flight, SA-9. NASA Marshall Space Flight Center Report MPR-SAT-FE-66-4, Feb. 28, 1966.

2-2. Results of the Ninth Saturn I Launch VEhicle Test Flight, SA-8. NASA Marshall Space Flight Center Report MPR-SAT-FE-66-10, June 13, 1966.

2-3. Results of the Tenth Saturn I Launch Vehicle Test Flight, SA-10. NASA Marshall Space Flight Center Report MPR-SAT-FE-66-11, July 14, 1966.

2-4. Postlaunch Report for Mission AS-201. NASA Johnson Space Center Report MSC-A-R-66-4, May 6, 1966.

2-5. Postlaunch Report for Mission AS-202. NASA Johnson Space Center Report MSC-A-R-66-5, Oct. 12, 1966.

2-6. Apollo 4 Mission Report. NASA Johnson Space Center Report MSC-PA-R-68-1, Jan. 7, 1968.

2-7. Apollo 5 Mission Report. NASA Johnson Space Center Report MSC-PA-R-68-7, March 27, 1968.

2-8. Apollo 6 Anomaly Report No. 6 - Abnormal Structural Performance During Launch. NASA Johnson Space Center Report MSC-PT-R-68-22, April 1969.

2-9. Apollo 6 Mission Report. NASA Johnson Space Center Report MSC-PA-R-68-9, June 1968.

2-10. Report of Apollo 204 Review Board to the Administrator, National Aeronautics and Space Administration. April 5, 1967.

2-11. Apollo 7 Mission Report. NASA Johnson Space Center Report MSC-PA-R-68-15, December 1968.

2-12. Apollo 8 Mission Report. NASA Johnson Space Center Report MSC-PA-R-69-1, February 1969.

2-13. Apollo 9 Mission Report. NASA Johnson Space Center Report MSC-PA-R-69-2, May 1969.

2-14. Apollo 10 Mission Report. NASA Johnson Space Center Report MSC-00126, August 1969.

2-15. Map ORB-II-6 (100) 1:100 000. First ed., prepared for NASA by Army Map Service, Corps of Engineers, December 1967.

2-16. Apollo 11 Mission Report. NASA SP-238, 1971.

2-17. Apollo 11 Preliminary Science Report. NASA SP-214, 1969.

2-18. Surveyor III Site Map 1:2 000. First ed., prepared for NASA by Army Map Service, Corps of Engineers, January 1968.

2-19. Apollo 12 Mission Report. NASA Johnson Space Center Report MSC-01855, March 1970.

2-20. Apollo 12 Preliminary Science Report. NASA SP-235, 1970.

2-21. Apollo 13 Anomaly Report No. 1 - Cryogenic Tank 2 Anomaly. NASA Johnson Space Center Report MSC-02545, July 1970.

2-22. Apollo 13 Mission Report. NASA Johnson Space Center Report MSC-02680, September 1970.

2-23. Lunar Topographic Photomap of Fra Mauro 1:25 000. Third ed., prepared by Mapping Sciences Laboratory, NASA Johnson Space Center, November 1970.

2-24. Apollo 14 Mission Report. NASA Johnson Space Center Report MSC-04112, May 1971.

2-25. Apollo 14 Preliminary Science Report. NASA SP-272, 1971.

2-26. Rima Hadley Lunar Photomap, Orbiter V Site 26.1 1:250 000. First ed., prepared by U.S. Army Topographic Command, April 1970.

2-27. Apollo 15 Mission Report. NASA Johnson Space Center Report MSC-05161, December 1971.

2-28. Apollo 15 Preliminary Science Report. NASA SP-289, 1972.

2-29. Lunar Topographic Photomap of Descartes 1:25 000. First ed., prepared by U.S. Army Topographic Command, January 1972.

2-30. Apollo 16 Mission Report. NASA Johnson Space Center Report MSC-07230, August 1972.

2-31. Apollo 16 Preliminary Science Report. NASA SP-315, 1972.

2-32. Lunar Topographic Photomap of Taurus-Littrow 1:25 000. First ed., prepared by U.S. Army Topographic Command, September 1972.

2-33. Apollo 17 Mission Report. NASA Johnson Space Center Report JSC-07904, March 1973.

2-34. Apollo 17 Preliminary Science Report. NASA SP-330, 1973.

# 3.0 SCIENCE SUMMARY

## 3.1 INTRODUCTION

The reality of, and enthusiasm for, lunar science greatly increased with the safe return of the Apollo 11 astronauts from man's landing on the moon. Although serious effort in planning, designing, developing, testing, and training for the scientific aspects of the Apollo program had been started much earlier by NASA, the greater emphasis had been correctly concentrated on the accomplishment of the safe lunar landing and return of the crews. Early accomplishment of the spacecraft operational objectives opened the way for more attention to be focused on the scientific potential of Apollo missions. The operational and scientific success of each successive mission stimulated a more vigorous interest in the solar system and established the study of the moon as a modern interdisciplinary science.

Although a considerable amount of scientific data was obtained during the early Apollo missions (Apollo 7 through 14), a significantly greater amount of data was obtained as the result of the Apollo 15, 16, and 17 missions. For each of the latter missions, a diverse set of experiments was installed in the service module and collected data during lunar orbit. These experiments increased the scientific scope of the missions, and the data obtained complemented the data from the experiments being operated on the lunar surface. In addition, more extensive first-hand exploration of the lunar surface was accomplished by the crews on these missions because longer stay times were allowed, and because the addition of the lunar roving vehicle increased the range of travel on the lunar surface as well as the load of instruments, equipment, and lunar sample material transported on crew traverses. Also, more science data were provided by the lunar surface complement of experiments operated by the crews during the extravehicular activities and by the continuing postmission telemetry from the science stations established at each site.

The large amount of data and material collected as the result of the lunar missions will continue to provide study sources for many years. The crews took thousands of science-quality photographs on the lunar surface and from lunar orbit. Approximately 380 kilograms of lunar soil and rocks were brought back to earth in the returning spacecraft. Five long-term science stations were established on the lunar surface with 22 operating experiments continuing to transmit science data to the earth. The Apollo 12 crew retrieved selected components of a previously landed Surveyor spacecraft. Many materials were transported to the moon, exposed in the lunar environment, and returned for analysis and study.

Findings resulting from the Apollo lunar science program are discussed in the following sections. Science hardware performance is also discussed in conjunction with each experiment. Much of the information in these sections was extracted from the Apollo Preliminary Science Report series. In some cases, publication of results was scheduled by NASA before sufficient data were available to the principal investigators for comprehensive analyses. Thus, results published in the early reports were not as complete as in later reports. In these cases, an attempt has been made to include the latest information. References 3-1, 3-2 and 3-3 provide reviews of the present understanding of the moon's composition and history.

## 3.2 LUNAR SURFACE SCIENCE

During each Apollo lunar landing mission, the crewmen emplaced and activated a lunar geophysical observatory to be controlled and monitored from earth, collected samples of lunar soil and rock, photographically documented the geologic features of the landing area, and performed other exploration activities. The locations of the Apollo landing sites are shown in figure 3-1 and the lunar surface science activities (formal experiments and science detailed objectives) are identified in table 3-I. The Apollo missions during which the activities were accomplished are also indicated in the table.

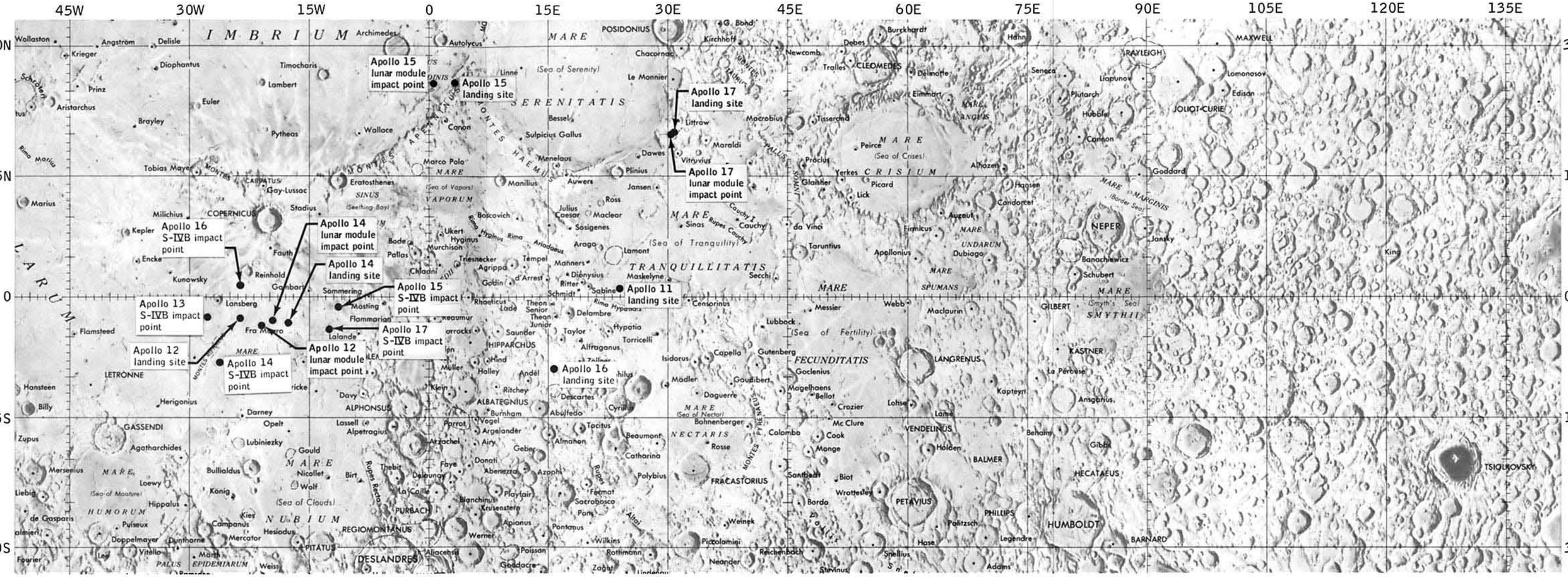


LUNAR CHART (LPC-1)
SCALE 1:10,000,000
*1ST EDITION MARCH 1970*

MERCATOR PROJECTION (45°N to 45°S)
Scale 1:10,000,000 at 34°N and S Latitudes.

PREPARED BY THE AERONAUTICAL CHART AND INFORMATION CENTER, UNITED STATES AIR FORCE, UNDER THE DIRECTION OF THE DEPARTMENT OF DEFENSE

Lithographed by ACIC 3-70 (3C588 BHT)

For sale by the Superintendent of Documents
U.S. Government Printing Office
Washington, D.C. 20402 - 50 cents

Figure 3-1.- Apollo landing sites and impact locations on the lunar surface.

TABLE 3-I.- APOLLO LUNAR SURFACE SCIENCE SUMMARY

| Experiment/objective | Experiment number | Mission | | | | | |
|---|---|---|---|---|---|---|---|
| | | 11 | 12 | 14 | 15 | 16 | 17 |
| [a]Lunar geology investigation | S-059 | X | X | X | X | X | X |
| Soil mechanics experiment | S-200 | X | X | X | X | X | X |
| Lunar sample analysis | -- | X | X | X | X | X | X |
| [b]Passive seismic experiment | S-031 | X | X | X | X | X | |
| [b]Active seismic experiment | S-033 | | | X | | X | |
| [b]Sesimic profiling experiment | S-203 | | | | | | X |
| [b]Lunar surface magnetometer experiment | S-034 | | X | | X | X | |
| Portable magnetometer experiment | S-198 | | | X | | X | |
| [b]Heat flow experiment | S-037 | | | | X | X | X |
| [b]Lunar surface gravimeter experiment | S-207 | | | | | | X |
| Traverse gravimeter experiment | S-199 | | | | | | X |
| Surface electrical properties experiment | S-204 | | | | | | X |
| Lunar neutron probe experiment | S-299 | | | | | | X |
| [b]Laser ranging retro-reflector | S-078 | X | | X | X | | |
| [b]Charged-particle lunar environment experiment | S-038 | | | X | | | |
| [b]Solar wind spectrometer experiment | S-035 | | X | | X | | |
| Solar wind composition experiment | S-080 | X | X | X | X | X | |
| [b]Suprathermal ion detector experiment | S-036 | | X | X | X | | |
| [b]Cold cathode gage experiment | S-058 | | X | X | X | | |
| Cosmic ray detector (sheets) experiment | S-152 | | | | | X | X |
| [b]Lunar dust detector experiment | M-515 | X | X | X | X | | |
| [b]Lunar ejecta and meteorites experiment | S-202 | | | | | | X |
| [b]Lunar atmospheric composition experiment | S-205 | | | | | | X |
| Surveyor III analysis | -- | | X | | | | |
| Long-term lunar surface exposure | -- | | | | | | X |
| Far ultraviolet camera/spectrograph | S-201 | | | | | X | |

[a]Field geology activities included documentary photography, collection of lunar material samples, and crew observations.

[b]Part of an Apollo lunar surface experiments package.

As noted in table 3-I, some experiments are part of the geophysical observatories called Apollo lunar surface experiments packages. Using a long-life self-contained power source (radioisotope thermoelectric generator) and communications equipment, each Apollo lunar surface experiments package operates as a remote science station to collect and transmit to earth scientific and engineering data obtained over extended periods of time. The system was flown on Apollo 12 and all subsequent Apollo missions. The aborted lunar landing of Apollo 13 resulted in the loss of the package of experiments; however, the overall program objectives were met by rearranging the experiment assignments of the subsequent flights. A variation of the Apollo lunar surface experiments package, known as the early Apollo scientific experiments package, was flown on the Apollo 11 mission. This package was selected to minimize deployment time and to simplify crew tasks during the first extravehicular activity on the lunar surface.

Rock and soil samples have been collected from most of the major physiographic or photogeologic units identified on the lunar surface prior to the Apollo missions. This collection has and will continue to provide a steady flow of data on the history of the moon. The staggering amount of published material presenting the results of experiments and the analyses of lunar samples cannot be covered in this document. However, the major findings are briefly summarized.

The moon may have accreted to its present mass 4.6 billion years ago. Early activity may have included large-scale magmatic differentiation to produce an anorthositic crust. Throughout early lunar history until about 3.9 billion years ago, the lunar surface was subjected to intense bombardment which produced most of the large ring basins and the deposits of the lunar highlands. Samples from the highlands indicate a very complex history of shock melting and fracturing of the anorthositic crust. Fragments interpreted as plutonic rocks from the crust have been found in some breccia samples collected at highland sites.

Millions of years after the period of intense bombardment, volcanism along the margins of the large ring basins, such as Mare Imbrium, began to fill the basins with lava flows. In a period from about 3.8 to 3.1 billion years ago, these basins were filled with iron- and titanium-rich basaltic lavas; these are now the flat, dark colored mare plains.

Meteoritic bombardment of the lunar surface has continued to the present, although less vigorously than in the past, forming craters and covering the surface with loose debris or regolith. Studies of soil samples from the regolith sections (cores) reveal an incredibly complex history of bombardment by meteorites and galactic and solar radiation through time.

The moon is now inactive, having cooled to a state of inactivity more than 3 billion years ago, the time of formation of the youngest lavas. In contrast with the earth, there is no water and there are no life forms. The surface is, however, constantly changing due to bombardment by cosmic debris.

### 3.2.1 Geology of the Apollo 11 Landing Site

Tranquillity Base, the Apollo 11 landing site, is approximately 20 kilometers south-southwest of the crater Sabine D in the southwestern part of Mare Tranquillitatis (Sea of Tranquillity) and 41.5 kilometers north-northeast of the western promontory of the Kant Plateau, which is the nearest highland region. The Surveyor V spacecraft is approximately 25 kilometers north-northwest of the Apollo 11 landing site, and the impact crater formed by Ranger VIII is 68 kilometers northeast of the landing site (ref. 3-4). Figure 3-2 shows the Apollo 11 landing site relative to the Surveyor V and Ranger VIII locations. Figure 3-3 is a diagram of the lunar surface activity areas.

The following observations suggest that the mare material is relatively thin.

a. An unusual ridge ring named Lamont, which occurs in the southwestern part of the mare, may be localized over the shallowly buried rim of a premare crater.

b. No large positive gravity anomaly, such as those occurring over the deep mare-filled circular basins, is associated with the Sea of Tranquillity (ref. 3-5).

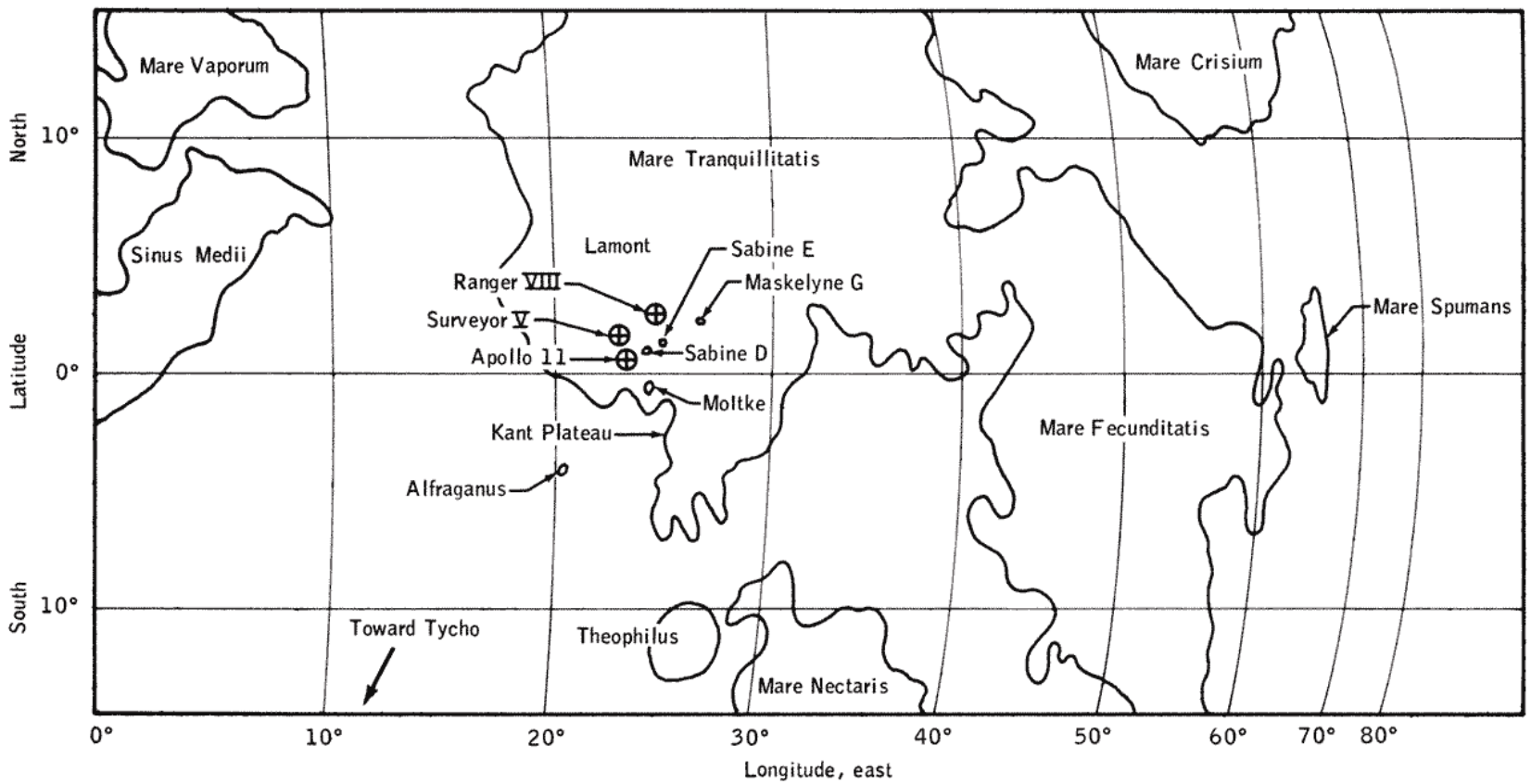


Figure 3-2.- Apollo 11 landing location relative to Surveyor V and Ranger VIII.

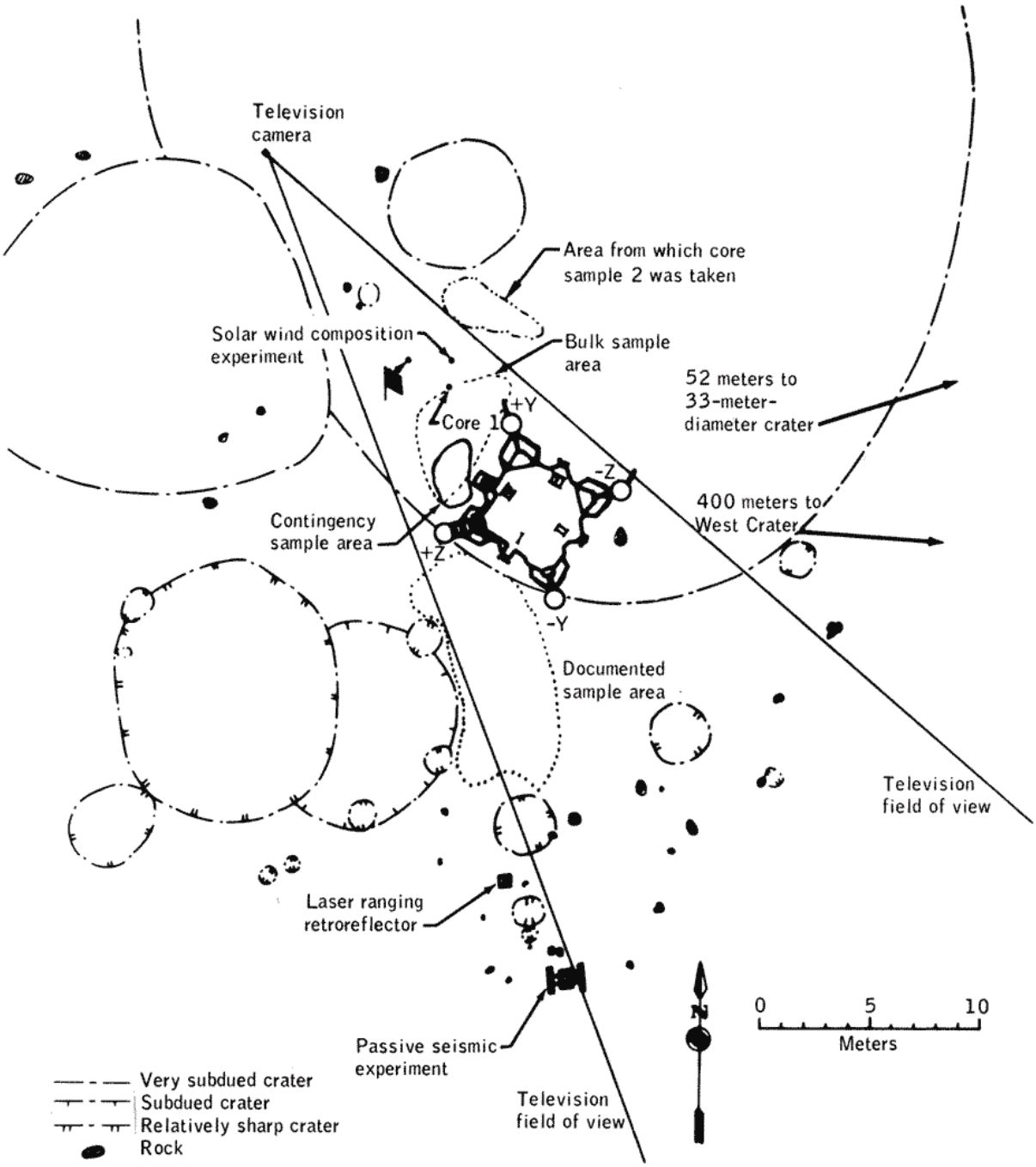


Figure 3-3.- Diagram of Apollo 11 lunar surface activity area.

The southern part of the Sea of Tranquillity is crossed by relatively faint but distinct rays trending north-northwest and by prominent secondary craters associated with the crater Theophilus, which is located 320 kilometers southeast of the landing site. Approximately 15 kilometers west of the landing site is a fairly prominent ray that trends north-northeast. The crater with which this ray is associated is not definitely known; the ray may be related to the crater Alfraganus, 160 kilometers southwest of the landing site, or to Tycho, approximately 1500 kilometers southwest of the landing site. Neither the ray that trends north-northeast nor any of the rays that trend north-northwest cross the landing site; these rays are sufficiently close, however, so that material from Theophilus, Alfraganus, or Tycho is possibly found near the landing site. Craters such as Sabine D and Sabine E (fig. 3-2), with a diameter greater than 1 kilometer, may have been excavated partly in premare rocks; and premare rock fragments that have been ejected from these craters may also occur near the lunar module landing site (ref. 3-6).

Based on albedo and crater density, three geologic units can be distinguished in the mare material near the landing site. The lunar module landed on the most densely cratered unit of these three geologic units. These units may correspond to lava flows of different ages; if so, the unit at the landing site is probably the oldest.

The approximately 21 kilograms of lunar material returned by the Apollo 11 crew were characterized by the lunar sample analysis planning team as follows (ref. 3-7): The samples from Tranquillity Base consist of basaltic igneous rocks; microbreccias, which are a mixture of rock, glass and mineral fragments; and lunar soil. The soil is a diverse mixture of crystalline and glassy fragments with various shapes; the soil also includes fragments of iron, some of which may be of meteoric origin. Most rock fragments are similar to and apparently derived from the larger igneous rocks; the rocks in turn were probably once part of the underlying bedrock. A few of the crystalline fragments are totally different from any of the igneous rocks of the Tranquillity site. A strong possibility exists that these fragments represent samples from the nearby highlands.

Many rock surfaces and individual fragments in the soil show evidence of surface erosion by hypervelocity impacts. Examination of the surfaces of the glassy fragments, which are themselves formed by impact processes, shows that these objects contain beautifully preserved microscopic pits as small as 10 microns in diameter. These pits are the result of high velocity impacts by tiny particles. There is also evidence that the impact process is accompanied by local melting, splashing, evaporation, and condensation.

The crystalline rocks, which have typical igneous textures, range from very-fine-grained vesicular rocks to medium-grained equigranular rocks. The most common minerals are pyroxene (often highly zoned with iron-rich rims), plagioclase, ilmenite, olivine, and cristobalite. Free metallic iron and troilite, both of which are extremely rare on earth, are common accessory minerals in the igneous rocks. All the silicate minerals are unusually transparent and clear because of the complete absence of hydrothermal alteration. Laboratory experiments with silicate liquids similar in composition to the lunar liquids show that, at the time of crystallization, the observed phases can have coexisted only in a very dry, highly reducing system; the partial pressure of oxygen in this system is estimated to be $10^{-13}$ atmosphere. This pressure is more than five orders of magnitude lower than that for typical terrestrial basaltic magmas. The very low abundance of ferric ions in pyroxenes, determined by Mossbauer spectroscopy and electron spin resonance, is further evidence of the low oxidation level of the magmas. The melting experiments also indicate that 98 percent of the primary igneous liquid crystallized in the temperature range 1480° to 1330° K, with minor interstitial liquids continuing to crystallize down to temperatures around 1220° K. Microscopic and microprobe examination provides clear-cut evidence for the existence of an interstitial liquid rich in potassium and aluminum that probably was immiscible with the main liquid. Further, calculations indicate that the viscosity of the lunar magmas was approximately an order of magnitude lower than that of terrestrial basaltic magmas. This characteristic may play a significant role in the explanation of the textural features, the differentiation mechanisms that produced the observed chemical composition, and the morphological features of the lunar seas themselves.

The regolith consists chiefly of particles less than 1 millimeter in diameter. The regolith is weak and easily trenched to depths of several centimeters. Surface material was easily dislodged when kicked. The flagpole for the United States flag and the core tubes, when pressed into the surface, penetrated with ease to a depth of 10 to 12 centimeters. At that depth, the

regolith was not sufficiently strong, however, to hold the core tubes upright; a hammer was needed to drive the core tubes to depths of 15 to 20 centimeters. The tubes, rods, and scoop that were pressed into the subsurface at several sample sites encountered rocks in the subsurface.

The crewman's boots left prints approximately 3 millimeters to 3 centimeters deep in the fine-grained regolith material. Smooth molds of the boot treads were preserved in the bootprints, and angles of 70° were maintained in the walls of the bootprints. The fine-grained surficial material tended to break into slabs, cracking as far as 12 to 15 centimeters from the edges of the footprints.

The finest fraction of the regolith adhered weakly to boots, gloves, space suits, handtools, and rocks on the lunar surface. On repeated contact, the coating on the boots thickened until boot color was completely obscured. When the fine particles of the regolith were brushed off, a stain remained on the space suits.

In places where fine-grained material was kicked by the crewmen, the freshly exposed material was conspicuously darker than the undisturbed surface. The subsurface material probably lies at depths no greater than a millimeter from the surface. The existence of a thin surface layer of lighter colored material at widely scattered localities indicates that some widespread process of surface material alteration is occurring on the moon.

Fillets (fine-grained material which is banked against the sides of some of the larger rock fragments) were observed at least as far as 70 meters from the lunar module, and most fillets are almost certainly natural features of the surface. On sloping surfaces, the crew observed that the fillets were larger on the uphill sides of rocks than on the downhill sides. The sides of rocks are ballistic traps, and the fillets have probably been formed by the trapping of low-velocity secondary particles. Asymmetric development of fillets around rocks on slopes may be caused partly by preferential downhill transport of material by ballistic processes and partly by downhill creep or flow of the fine-grained material (ref. 3-6).

### 3.2.2 Geology of the Apollo 12 Landing Site

The Apollo 12 landing site is on the northwestern rim of the 200-meter-diameter crater in which the Surveyor III spacecraft (fig. 3-4) touched down on April 20, 1967, in the eastern part of Oceanus Procellarum (Ocean of Storms), approximately 120 kilometers southeast of the crater Lansberg and due north of the center of Mare Cognitum (Known Sea). The landing site is on a broad ray associated with the crater Copernicus, 370 kilometers to the north. The landing site is characterized by a distinctive cluster of craters ranging in diameter from 50 to 400 meters. Two geologic traverses (fig. 3-5) were made on or near the rims of these craters and on deposits of ejecta from the craters. During the traverses, the crew collected approximately 34 kilograms of lunar material.

The lunar regolith at the Apollo 12 landing site is composed of fragmental material which ranges in size from particles too fine to be seen with the naked eye to blocks several meters in diameter. Along several parts of the traverse made during the second extravehicular activity period, the crew found fine-grained material of relatively high albedo that in some places was in the shallow subsurface and in other places lay on the surface. Some of this light-gray material may constitute a discontinuous deposit that is observed through telescopes as a ray of Copernicus.

Darker regolith material that generally overlies the light-gray material is only a few centimeters thick in some places but probably thickens greatly on the rims of some craters. The darker material varies from place to place in the size, shape, and abundance of its constituent particles and in the presence or absence of patterned ground. Most local differences are probably the result of local cratering events.

Many crew comments concerned the large amount of glass contained in the regolith. Irregularly shaped, small fragments of glass and glass beads are abundant both on and within the regolith; glass is also splattered on some blocks of rock at the surface and is found within many shallow craters.

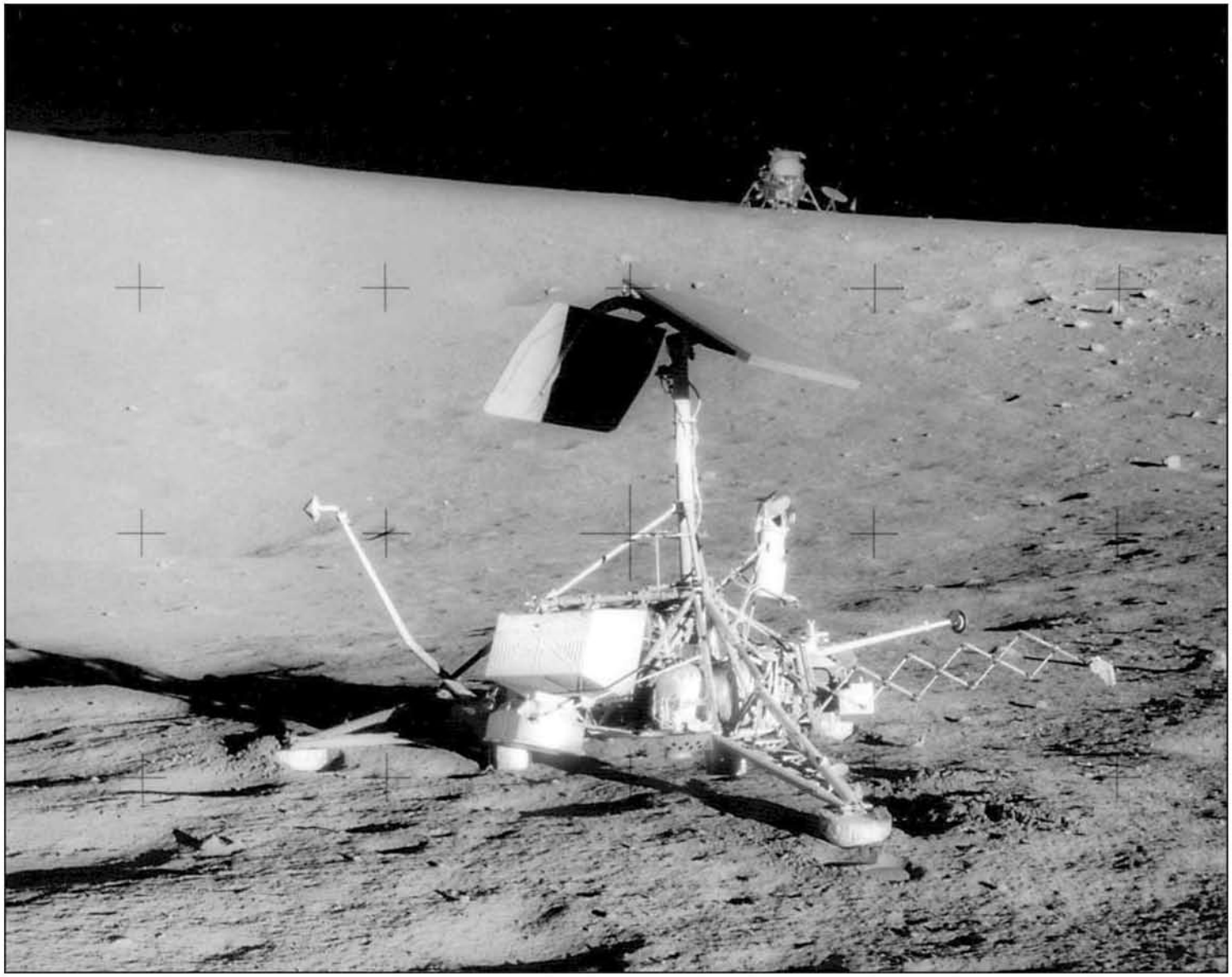

Figure 3-4.- Surveyor III with Apollo 12 lunar module in background.

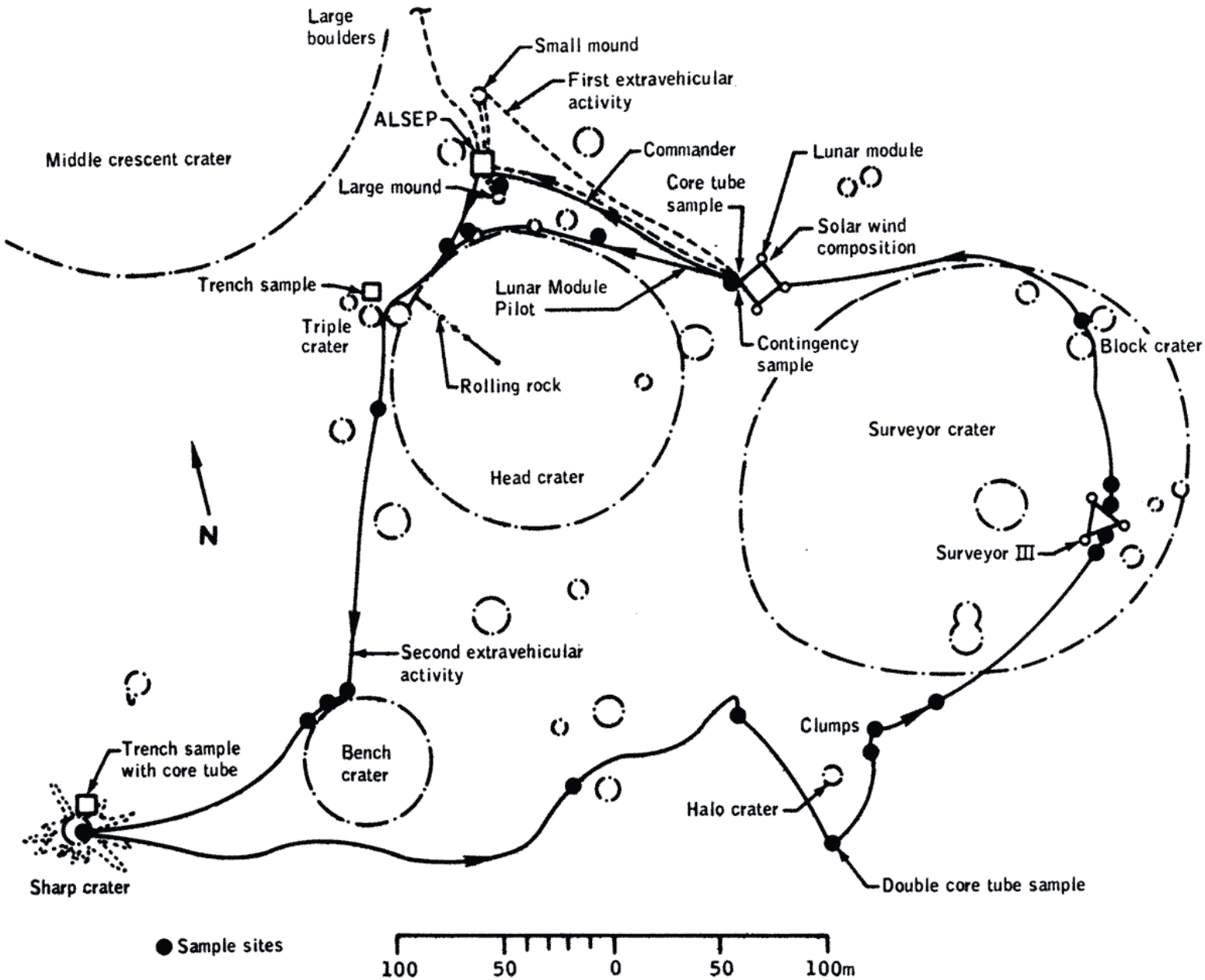


Figure 3-5. - Apollo 12 traverse diagram.

Much of the surface in the area of the geologic traverse made during the second extravehicular activity period is patterned by small, linear grooves. These grooves are visible on the returned photographs and were reported from several localities by the crew. The grooves are similar in appearance to those which are visible in some of the photographs from the Apollo 11 mission. The linear features have been interpreted as being caused by drainage of fine-grained material into fractures in the underlying bedrock. This interpretation would imply northeast- and northwest-trending joint sets in the bedrock of the Apollo 11 site and north- and east-trending joint sets in the Apollo 12 site bedrock.

One notable difference between the collection of rocks obtained at the Apollo 12 landing site and the collection obtained at Tranquillity Base is the ratio of crystalline rocks to microbreccia. At the Apollo 12 site, the rocks collected were predominantly crystalline, whereas, at Tranquillity Base, approximately half the rocks collected were crystalline and half were microbreccia. This difference is probably attributable to the fact that the rocks collected at the Apollo 12 landing site were primarily on or near crater rims. On the crater rims, the regolith is thin or only weakly developed, and many rocks observed are probably derived from craters that have been excavated in bedrock that is well below the regolith. By contrast, Tranquillity Base is on a thick, mature regolith, where many observed rock fragments were produced by shock lithification of regolith material and were ejected from craters too shallow to excavate bedrock (ref. 3-8).

Analysis of the returned Apollo 12 lunar samples showed the following:

a. Although still old by terrestrial standards, the Apollo 12 rocks are approximately 600 to 700 million years younger than the rocks from the Apollo 11 site.

b. Whereas the Apollo 11 collection contained approximately half vitric breccias, the Apollo 12 collection contained only two breccias in the 45 rocks collected.

c. The regolith at the Apollo 12 site is approximately half as thick as the regolith at the Apollo 11 site. Complex stratification within the regolith is evident.

d. A bright-colored layer of material referred to as KREEP was sampled at varying depths. It consists of fragments rich in potassium, rare earth elements, and phosphorous. It may have originated as ejecta from a distant, large crater, perhaps Copernicus.

e. The amount of solar wind material in the Apollo 12 fines is considerably lower than that in the Apollo 11 fines.

f. The lavas, in contrast to those from Apollo 11, display a wide range in both modal mineralogy and primary texture, indicating a variety of cooling histories.

g. Chemically, the "nonearthly" character of the Apollo 11 samples (high refractory element concentration and low volatile element concentration) is also noted in the Apollo 12 samples but to a lesser degree.

The soil at the Apollo 12 site is similar in appearance and behavior to the soils encountered at the Apollo 11 and the Surveyor equatorial landing sites. However, local variations in soil texture, color, grain size, compactness, and consistency are evident. No direct correlation between crater slope angle and consistency of soil cover is apparent. The consistency of the soil cover depends mainly on the geologic history of lunar terrain features and local environmental conditions.

### 3.2.3 Geology of the Apollo 14 Landing Site

The Apollo 14 landing site is in a broad, shallow valley between radial ridges of the Fra Mauro Formation, approximately 500 kilometers from the edge of Mare Imbrium (Sea of Rains, and also referred to geologically as the Imbrium Basin), which is the largest circular mare on the moon. The crater Copernicus lies 360 kilometers to the north, and the bright ray material that emanates from Copernicus covers much of the landing site region. The Fra Mauro region is an area of prime scientific interest because this region contains some of the most clearly exposed geological formations that are characteristic of the Fra Mauro Formation.

The Fra Mauro Formation is an extensive geological unit that is distributed in an approximately radially symmetric fashion around the Sea of Rains over much of the near side of the moon. Stratigraphic data indicate that the Fra Mauro Formation is older than the mare at the Apollo 11 and 12 sites. The Formation is thought to be part of the ejecta blanket that resulted from the excavation of the Imbrium Basin. The Apollo 14 landing site thus offered an opportunity to sample material that had been shocked during one of the major cataclysmic events in the geological history of the moon and, thereby, to determine the date of the event. Furthermore, because of the size of the Imbrium Basin, the belief was that some material had come from deep (tens of kilometers) within the original lunar crust. Thus, a landing at the Fra Mauro Formation, in principle, was expected to offer an opportunity to sample the most extensive vertical section available of the primordial moon (ref. 3-9).

The lunar module landed approximately 1100 meters west of Cone Crater,* which is located on the ridge of the Fra Mauro Formation. Cone Crater is a sharp-rimmed, relatively young crater approximately 340 meters in diameter that ejected blocks of material as much as 15 meters across, which were derived from beneath the regolith. Sampling and photographing of these blocks were the primary objectives of the mission. Rays of blocky ejecta from Cone Crater extend westward beyond the landing site. The landing took place on a smooth terrain unit recognized in photographs previously taken during earlier Lunar Orbiter and Apollo missions. Sampling and describing this geological unit was another important objective of this mission.

During the first period of extravehicular activity, the crew traversed westward over the smooth terrain for a round-trip distance of approximately 550 meters and deployed the Apollo lunar surface experiments package (fig. 3-6). The crew covered a round-trip distance of approximately 2900 meters eastward from the lunar module during the second extravehicular activity (fig. 3-6). During the traverse, the crew crossed the smooth terrain, the Fra Mauro ridge unit, and a section through the continuous ejecta blanket of Cone Crater to within 20 meters of the crater rim crest. Forty-eight rock samples, the locations of which have been determined, were collected at points along the traverse. The modular equipment transporter (sec. 4.8) was used to transport the samples and the collection tools. Approximately 43 kilograms of lunar material, including 69 rock samples, were collected during the two periods of extravehicular activity.

Although the soil surface texture and appearance at the Apollo 14 landing site are similar to those at the Apollo 11 and 12 landing sites, a greater variation exists in the characteristics of the soil at shallow depths (a few centimeters) in both lateral and vertical directions than had previously been supposed. The stratigraphy at the trench site showed a dark, fine-grained material (to a depth of 3 to 5 centimeters) underlain by a very thin glassy layer that, in turn, is underlain by a material of medium to coarse sand gradation. As had been the case in previous missions, dust was easily kicked up and tended to adhere to any surface contacted; however, overall dust was less of a problem than on previous missions. No difficulty was encountered in digging a trench into the lunar surface. Because of unexpectedly low cohesion of the soil at the trench site, the trench sidewalls caved in at somewhat shallower trench depths than had been predicted.

The Apollo 14 site is densely covered with craters in all stages of destruction. Some craters as much as 400 meters across have undergone nearly complete destruction, and the overlapping of relatively large, very gentle depressions gives the topography at the site a strongly undulating aspect. In contrast, the largest craters that have undergone nearly complete destruction at the Apollo 11 and 12 landing sites are approximately 50 to 100 meters in diameter.

The lunar regolith at Fra Mauro is thicker than at the mare sites. The surface material is finer grained in the western portion of the site away from the Cone Crater ejecta blanket than in the continuous ejecta blanket itself. Rock fragments larger than a few centimeters in diameter are rare in the western part of the site and become progressively more abundant toward Cone Crater. The regolith appears to be looser and less cohesive than that developed on the mare material; downslope movement of this loose debris has caused the eradication of small craters on slopes and extensive slumping of crater walls.

Boulders as large as 15 meters in diameter are present on the rim of Cone Crater; photographs of these boulders provided the first dramatic glimpse of relatively large segments derived from lunar bedrock and of detailed rock structures (fig. 3-7). Smaller boulders occur throughout the Cone Crater ejecta blanket and as isolated occurrences on raylike extensions of the ejecta blanket.

*Informal designation.

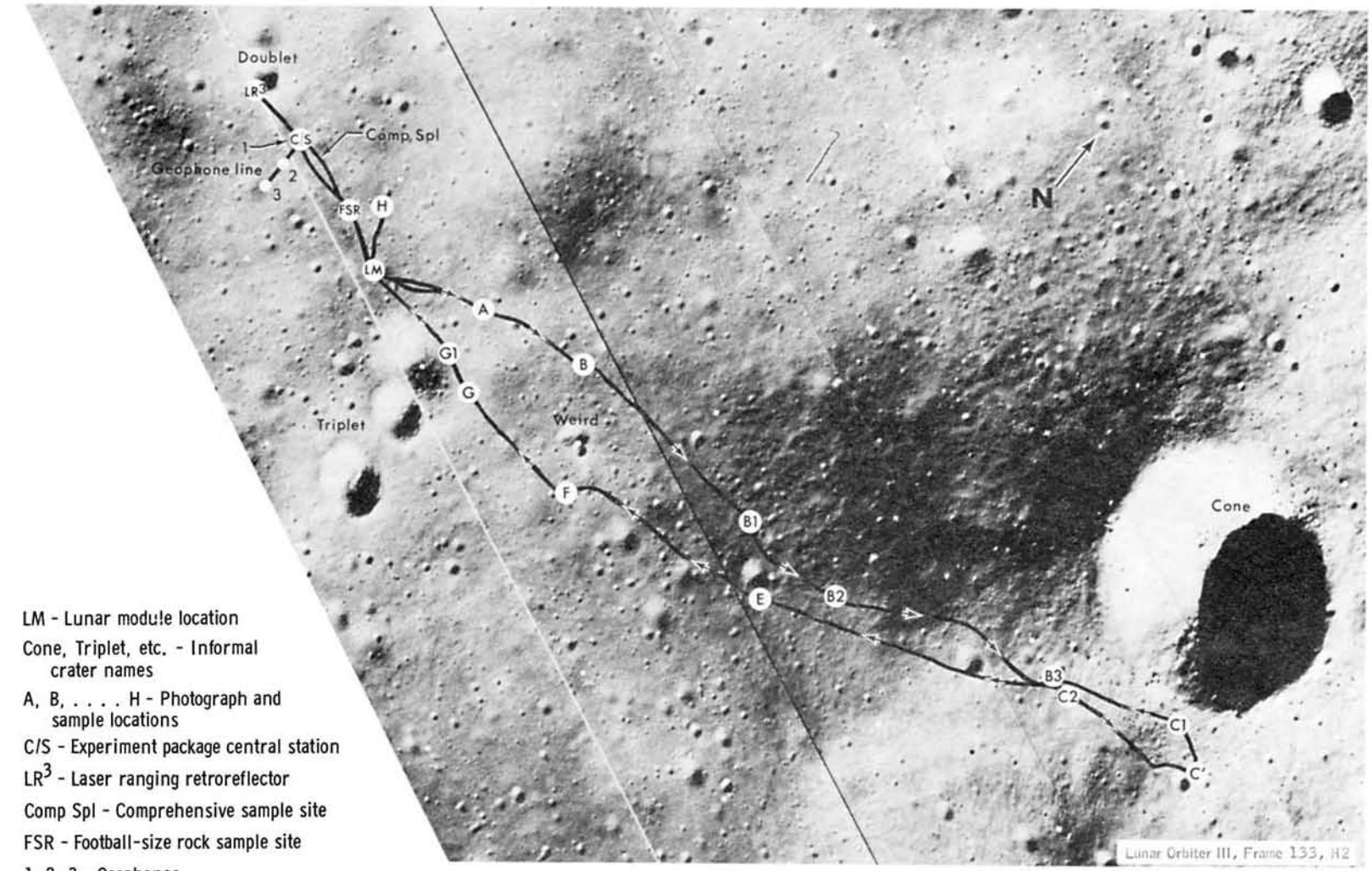


LM - Lunar module location

Cone, Triplet, etc. - Informal crater names

A, B, . . . . H - Photograph and sample locations

C/S - Experiment package central station

$LR^3$ - Laser ranging retroreflector

Comp Spl - Comprehensive sample site

FSR - Football-size rock sample site

1, 2, 3 - Geophones

Scale: meters

0 100 200 300 400 500

Figure 3-6. - Apollo 14 traverse routes.

Figure 3-7.- Boulders sampled near rim of Cone Crater.

All the boulders for which stereophotographs are available appear to be coherent breccias, some with discrete clasts as much as 150 centimeters in diameter, larger than any returned samples. Both light and dark clasts are recognizable. Resistance of the breccias to the weathering effects of the lunar environment varies considerably; some breccias have weathered to smooth, resistant surfaces and others to hackly, rough surfaces that may be rubbly. Significant and striking features within the boulders are sets of parallel fractures spaced at several millimeters to approximately 1 centimeter. Several intersecting sets of differently spaced fractures are present in some boulders.

Portions of some boulders close to the rim of Cone Crater are crudely layered with very light material that forms irregular bands from 25 to 40 centimeters thick. The light bands contain both lighter and darker clasts up to 10 centimeters across, and the host rock of the bands contains light clasts up to 10 centimeters across. Irregular parts of other boulders are also very light, but a layered relationship is not evident. Boulders containing light layers occur only near the rim of Cone Crater and, hence, may come from deeper levels in the crater.

Most large blocks have fillets of lunar fines and fragments embanked against the basal edges. The size of a fillet is commonly proportional to the size, degree of rounding, and apparent friability of the host rock. Fillets are preferentially developed against outward-sloping rock surfaces and contain coarse fragments spalled off the host rock. Burial of rocks is a combined product of (1) ejecta blanketing by adjacent impact events of all sizes, particularly on well-rounded rocks the tops of which are close to the surface, and (2) self-burial by micrometeorite and thermal erosion of the exposed rock surfaces.

Two well-developed sets of surface lineaments have the northwest and northeast trends observed at the Apollo 11 and 12 sites. A secondary set trends north. The large number of very long, straight lineaments is unique to the Apollo 14 site. These lineaments may be the result of very small, recent, vertical displacements along fractures or of the sifting of fine-grained material down into fractures that were propagated to the surface from a more coherent, joint substrate.

The samples consist almost entirely of complex breccias, displaying shock and thermal effects that are consistent with their postulated origin as debris from a large cratering event. The breccias are noritic in bulk composition. Some of the samples are vitric breccias which may have been formed by welding within the ejecta blanket of a smaller or local cratering event. Many of the breccia samples contain veins or pods of impact melt. On a larger scale, a plagioclase-rich basalt sample collected at the site may have been a lava, but was more likely crystallized in a pool of impact melt.

Radiometric ages for the Apollo 14 site cluster around a value of 3.9 billion years; if the Fra Mauro site is truly ejecta from Imbrium, then the Imbrium event occurred at that time (ref. 3-10).

Apollo 14 soil and breccia are enriched in the siderophile elements (iridium, rhenium, gold, nickel), relative to soils from mare surfaces. They may be derived from the Imbrium projectile itself or bodies which impacted the lunar surface to form pre-Imbrium craters.

In summary, the compositions of the Apollo 14 rocks are compatible with their derivation as an ejecta deposit from the Imbrium Basin. These rock samples are largely fragmental and show pronounced shock effects, and the composition of most samples is distinctly different from that of basaltic rocks from lunar maria. The crystallinity observed in many fragmental rocks is compatible with a single very large impact event in which annealing took place within a thick, hot ejecta blanket.

### 3.2.4 Geology of the Apollo 15 Landing Site

The landing site of Apollo 15 is on a dark mare plain (part of Palus Putredinis, or the Marsh of Decay) near the sinuous Rima Hadley (Hadley Rille) and the frontal scarp of the Montes Apenninus (Apennine Mountains) (fig. 3-8). This scarp is the main boundary of the Imbrium Basin, which is centered approximately 650 kilometers to the northwest. The largest mountains of the Apennines are a chain of discontinuous rectilinear massifs 2 to 5 kilometers high that are interpreted as fault blocks uplifted and segmented at the time of the Imbrium impact. Between the massifs and beyond them outside the basin are hilly areas that merge southeastward with a terrain

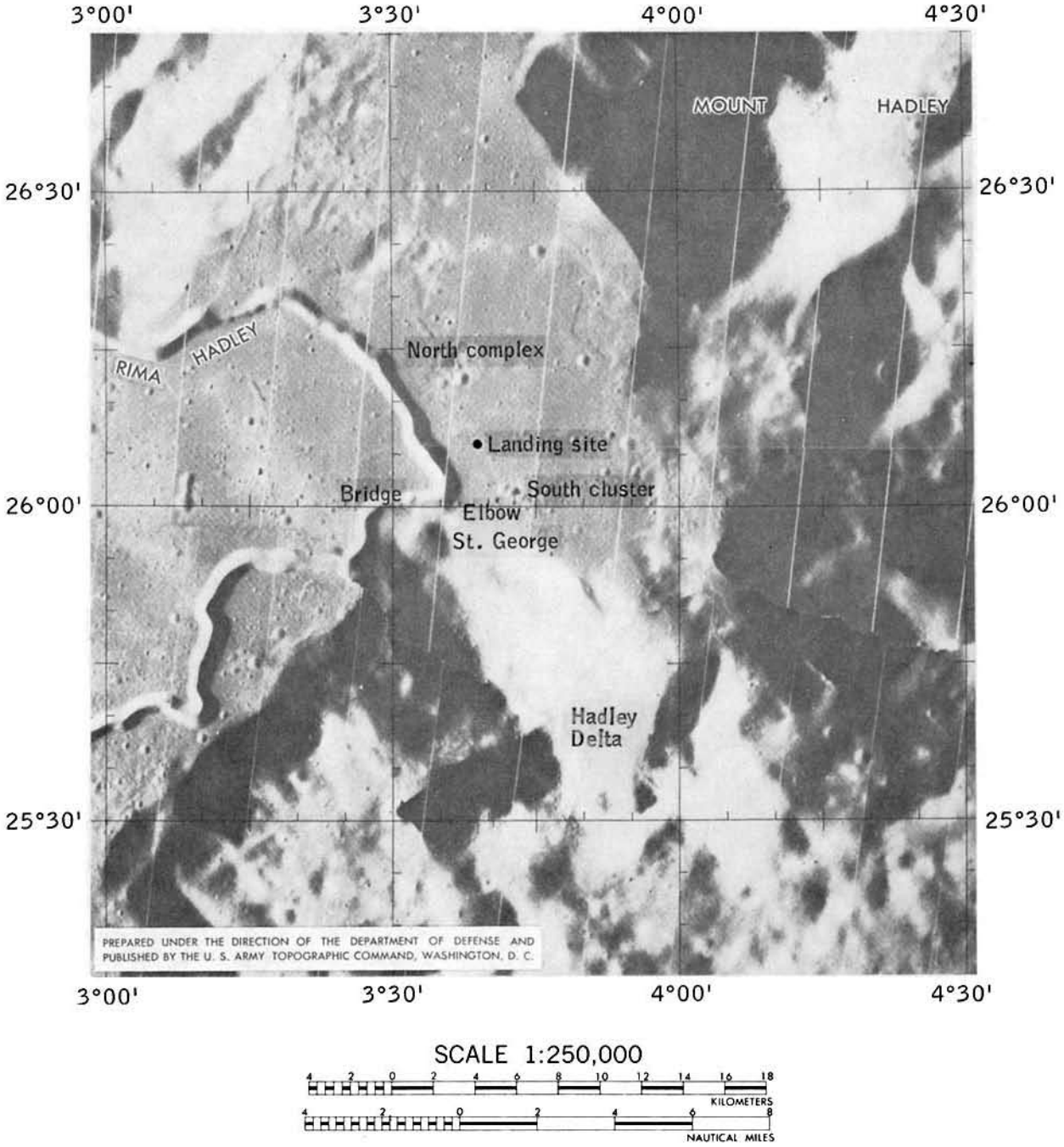


Figure 3-8.- Lunar module landing site on photomap of Hadley Plain.

interpreted as a blanket of ejecta from the Imbrium Basin, known as the Fra Mauro Formation. The hills appear to be jostled blocks mantled and subdued by the Imbrium ejecta. The large massifs, however, are not similarly subdued and so may be composed mainly of pre-Imbrium ejecta. The area is near the old Mare Serenitatis (Sea of Serenity) basin, which suggests that at least part of the pre-Imbrium material in the massifs is ejecta from the Sea of Serenity.

The mare material of the Marsh of Decay fills the lowlands at the base of the Apennines and creates a dark plain. The regional relations to the west show that several events occurred between the formation of the Imbrium Basin and the emplacement of the mare material. These events included the deposition of the premare plains-forming material and the cratering event that formed the crater Archimedes. The morphologies of the craters on the mare surface at the landing site indicate that the age of the surface is late Imbrian or early Eratosthenian.

Some hills and mountains in the area are dark like the mare and may be coated by a thin mantle of dark material. The region contains numerous diffuse light-colored rays and satellitic clusters of secondary impact craters from the large Copernican craters Autolycus and Aristillus to the north.

Hadley Rille (fig. 3-8) follows a winding course through the mare and locally abuts premare massifs. Hadley Rille appears to be one of the freshest sinuous rilles, and rock outcrops are common along the upper walls. The rille is more than 100 kilometers long, 1500 meters wide, and 400 meters deep.

The regional relations indicate that the mare rocks may rest on faulted pre-Imbrium rocks, breccia from the Imbrium impact, and light plains-forming units such as the Apennine Bench Formation. Whether or not the rille penetrates the premare material is unknown. The mare surface is covered with regolith approximately 5 meters thick.

Two major Apennine massifs, Mons Hadley (Mount Hadley) to the northeast and Hadley Delta just south of the landing site (fig. 3-8), tower over the Hadley plain to heights of 4.5 to 3.5 kilometers, respectively. The face of Mount Hadley is steep and high in albedo. The northern face of Hadley Delta, called the Front during the Apollo 15 mission, rises abruptly above the younger mare surface, except near Elbow Crater* where the contact is gradational, apparently because of the accumulation of debris from the slopes. As elsewhere on the moon, the steep slopes of the massifs are sparsely cratered because the craters are destroyed by the downslope movement of debris. A prominent exception is St. George,* a subdued crater 2.5 kilometers in diameter that predates the mare. The scarcity of blocks on both massifs indicates a thick regolith. The lower slopes of Hadley Delta were visited, and rock samples collected there indicate that the bedrock beneath the regolith consists of breccias.

The areas traversed by the Apollo 15 crew are shown in figure 3-9. The surface of the mare in the area visited is generally a plain that slopes slightly downward to the northwest. To the crew, the surface appeared hummocky or rolling, with subtle ridges and gentle valleys. The surface texture appeared smooth with scattered rocks occupying less than 5 percent of the total area. Widely separated, locally rough areas occur where recent impacts have left sharp crater rims and small boulder fields. The visible ridges and valleys are largely the forms of greatly subdued large craters, and the smoothness is caused by the destruction of blocks by erosion from small impacts. A large but indistinct ray shown on premission maps as crossing the mare surface was not visible to the crew as either a topographic or compositional feature, but the crew did note patches of lighter-colored material that may represent remnants of rays that have been largely mixed with the mare regolith.

The contact between the mare and the front of Hadley Delta is marked by a change of slope and a band of soft material with fewer large craters than are typical of the mare. The soft material of the band is probably a thickened regolith that includes debris derived from the slope by both cratering processes and downslope creep. Samples from talus at the base of highlands terrain (Hadley Delta) consist of breccias rich in fragments of plagioclase-rich basalt and anorthosite. They may have been deposited as ejecta by pre-Imbrium events or the Imbrium event. One of the anorthosite samples had a radiometric age of 4.1 billion years, a lower limit, since this rock has experienced a complex history of brecciation. There is a variety of mare basalt samples and a clastic rock composed of green glass spheres which may be of volcanic origin. The basalt (lava) samples are rich in iron and poor in sodium, as are other mare lavas. They have an age of 3.3 billion years.

*Informal designations.

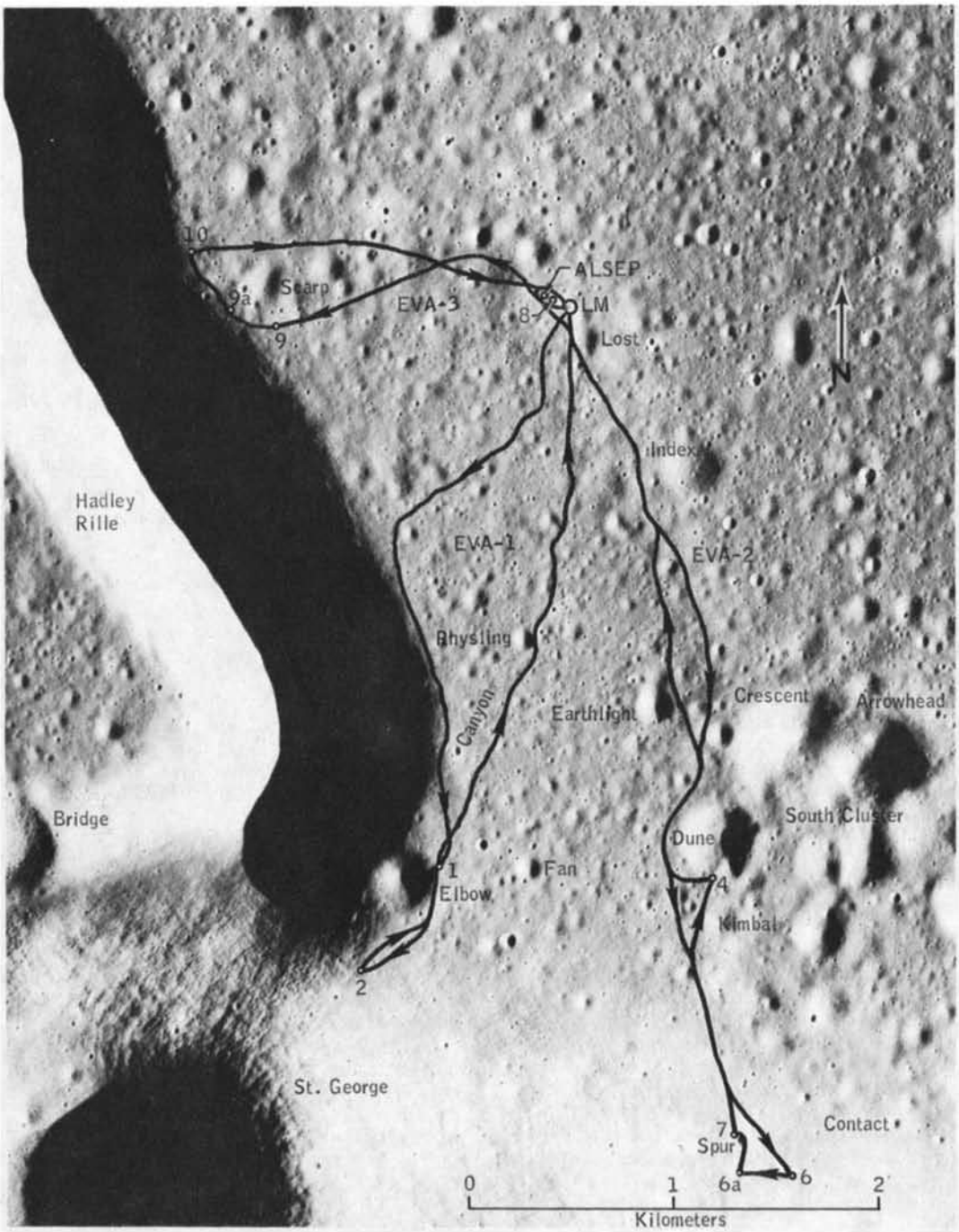


Figure 3-9.- Apollo 15 lunar surface traverse routes.

A 2.4-meter-deep core of the regolith revealed that it is composed of many soil layers ranging in thickness from a few millimeters to several tens of centimeters. The regolith is composed of layers of ejecta from impact craters, which are, in turn, reworked and mixed by micrometeorite bombardment. The 2.4-meter section at this site has undergone reworking and mixing for about 500 million years.

Soil mechanics analyses (from penetrometer tests, core sampling, and trenching performed by the astronauts; from photographs; and from other data) for the Apollo 15 site indicate the following:

a. Soil densities range from 1.36 to 2.15 grams per cubic centimeter.

b. No evidence of deep-seated slope failures is apparent, although surficial downslope movement of soil has occurred and the soil on steep slopes along the Apennine Front is in a near-failure condition.

### 3.2.5 Geology of the Apollo 16 Landing Site

The Apollo 16 lunar module landed at the western edge of the Descartes Mountains approximately 50 kilometers west of the Kant Plateau, part of the highest topographic surface on the near side of the moon. The Apollo 16 mission accomplished the first landing in the central lunar highlands, and the crew successfully explored and sampled a kind of terrain not previously visited. The landing site was selected as an area characteristic of both terra plains and rugged hilly and furrowed terra. The consensus of premission photogeologic interpretation was that both units were of probable volcanic origin. However, surface observations indicated that few or no volcanic rocks or landforms existed at the landing site but rather that the area is underlain by a wide variety of impact-generated breccias (ref. 3-11).

Ray materials derived from North Ray and South Ray Craters (fig. 3-10)* are the two most apparent sources of surface debris on the Cayley Plains. Ejecta from South Ray Crater also appear to mantle much of the surface of Stone Mountain near sampling stations 4 and 5 (fig. 3-10), so that uncertainty still exists as to whether Descartes materials were, in fact, sampled. Size distribution studies of fragments on the lunar surface suggest that the ejecta units of these two craters differ in character. Rock fragments are much less abundant in the North Ray ejecta blanket, which suggests that the North Ray impact may have excavated more friable material, that the length of time since the cratering event has been sufficient for subsequent impacts to destroy the smaller blocks, or both. South Ray ejecta, as mapped, include bright and dark areas, but the only surface differences observed are that the brightest areas have larger block sizes and a greater abundance of blocks. The mapped interray areas have no lunar surface characteristics that distinguish them from adjacent South Ray ejecta; they are, more or less, free of coarser rock fragments. Both ray and interray areas show a progressive northward decrease in total rock abundance and in relative abundance of the coarser sizes.

The regolith present on the ejecta blanket of North Ray Crater is only a few centimeters thick. Where ejecta blankets or ray deposits are not identifiable, the regolith is 10 to 15 meters thick. The surface of the regolith is medium gray, but high-albedo soils are present at depths of 1 to 2 centimeters in most of the traverse area.

The net weight of returned samples was approximately 94 kilograms. Of the total sample weight, almost 75 percent consists of rock fragments larger than 1 centimeter in diameter, nearly 20 percent consists of soil or residue fines, and the remainder consists of core and drive tube samples. The Apollo 16 rocks may be divided into three broad groups: fine- to coarse-grained, mostly homogeneous crystalline rocks; rocks composed substantially of glass; and fragmental rocks (breccias). The proportion of fragmental rocks in the returned samples exceeds 75 percent. Of 25 rocks classified as crystalline, 7 appear to be igneous. Although all the igneous rocks have been shattered and deformed to some extent, the predeformation textures are substantially intact. The two largest samples returned are coarse-grained nonvesicular rocks composed largely of plagioclase. These rocks resemble an Apollo 15 anorthosite sample but are probably more severely shock-deformed. Three are fine-grained, highly feldspathic rocks with crystal-lined vugs. Eighteen crystalline rocks appear to be metaclastic rocks with generally small proportions of lithic debris; these are hard, angular rocks characterized by fine-grained sugary textures. Five samples largely composed of glass were returned. Two of these are spheres, one hollow and one solid.

*Designations of lunar features shown in figure 3-10 are informal.

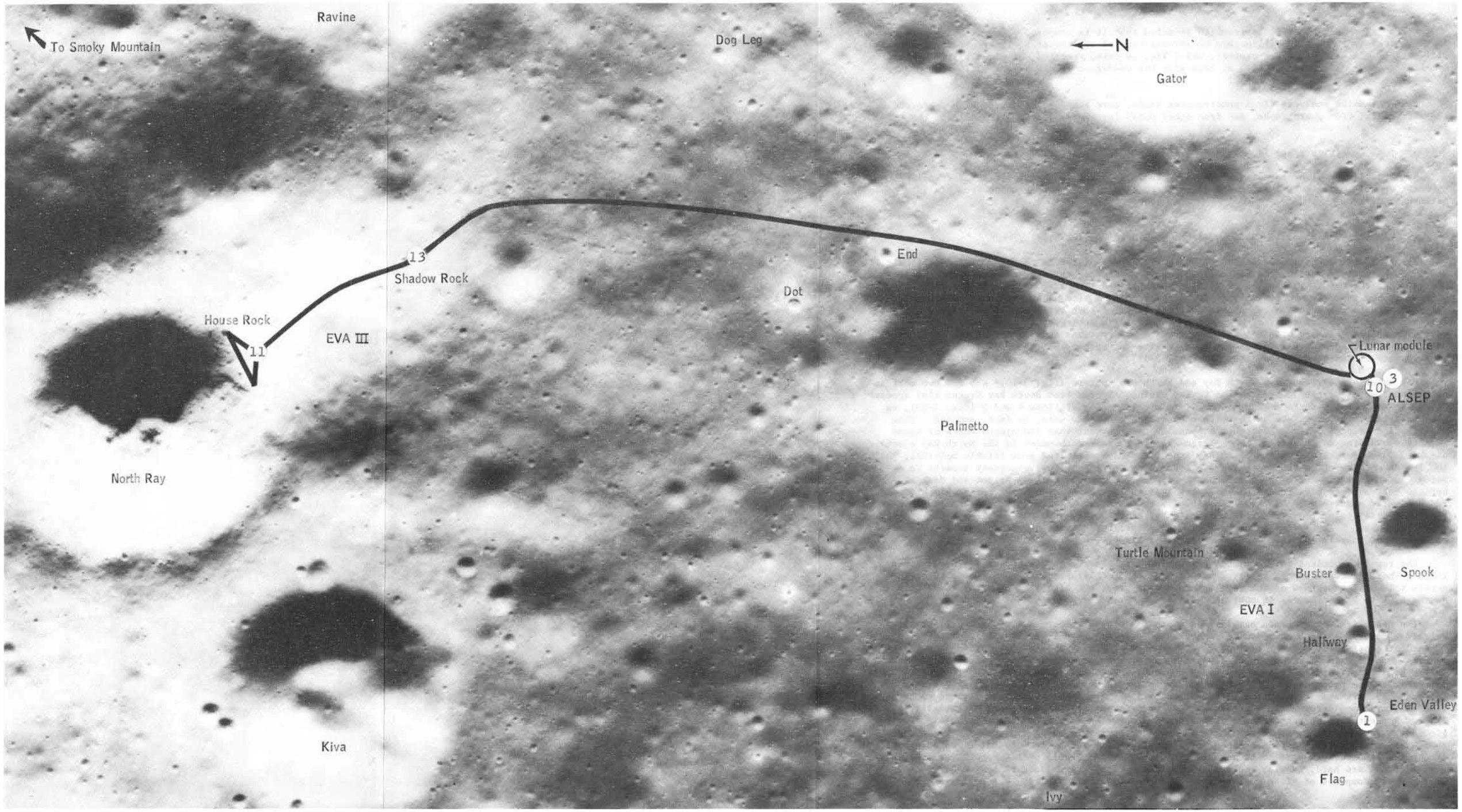


Figure 3-10.- Apollo 16 landing area and traverse routes.

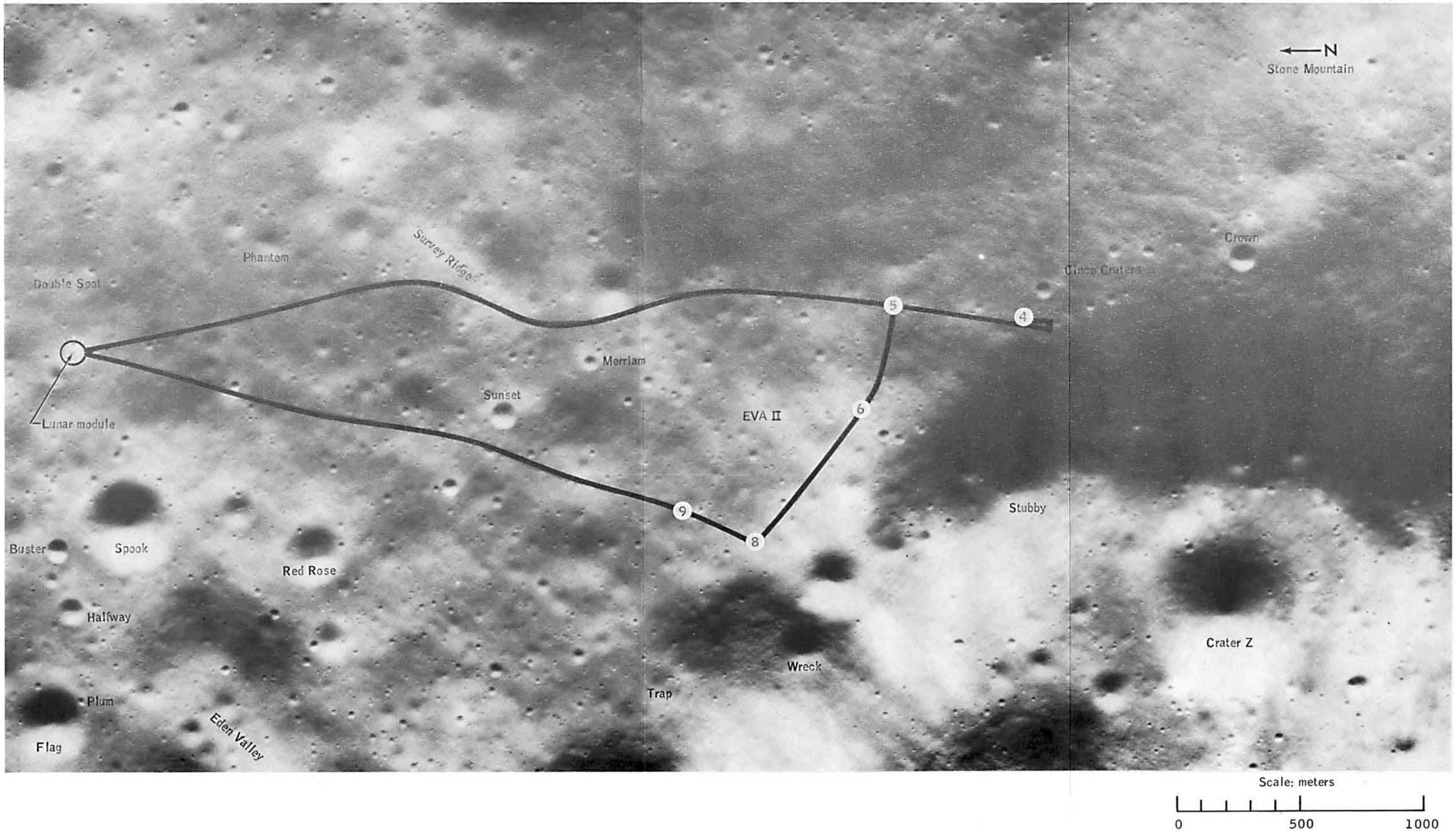


Figure 3-10.- Apollo 16 landing area and traverse routes (concluded).

The remaining three glass samples are irregular, coarse, agglutinates with numerous small lithic inclusions. The fragmental rocks have been divided into five main groups on the basis of proportions of light and dark clasts and matrix color. All five groups are varieties of impact-generated breccias; none appear to be of volcanic origin. The majority of the rocks are polymictic breccias, but a substantial minority are monomictic. Two types of clasts are clearly dominant: one type is dark, aphanitic to finely crystalline metaclastic rocks; the other is white, partly crushed to powdered feldspathic rocks. Less common clast types include light-gray or white rocks with granoblastic textures, a variety of gabbroic to anorthositic rocks with medium to coarse grain size, and rare feldspar-poor basaltic rocks. Matrices of the light- and medium-gray-matrix breccias are, for the most part, friable and not visibly altered by subsequent thermal events, whereas those of dark-matrix breccias are coherent and annealed or fused.

The rock distribution suggests that the section underlying the Cayley Plains is stratified, with an upper unit of medium-gray breccia and lower units composed mainly of light- and dark-matrix breccias. The extent of the supposed upper unit is not known but presumably extends at least between stations 1 and 6; considering the relative scarcity of the medium-gray breccias, the unit is probably not more than a few meters thick. Evidence derived from the photographs, crew descriptions, and samples collected at station 11 suggests that light-matrix breccias overlie dark-matrix breccias, whereas the color of ejecta on the rims of South Ray and Baby Ray Craters suggests that dark-matrix breccias overlie light-matrix breccias near those craters. Such a stratographic sequence in the South Ray area is consistent with the dominance of dark-matrix breccias described and photographed in South Ray ejecta between the landing site and station 8.

The Cayley Formation at the Apollo 16 site is a thick (at least 200 and possibly more than 300 meters), crudely stratified debris unit, the components of which are derived from plutonic anorthosites and feldspathic gabbros and from metamorphic rocks of similar composition. The formation has an elemental composition similar to that observed over large regions of the lunar highlands by the orbital X-ray experiments of the Apollo 15 and 16 missions. The observed textures and structures of the breccias resemble those of impact breccias. The textures and structures of the breccias do not resemble those of volcanic rocks nor do the plutonic or metamorphic source rocks of the breccias have the textures or compositions of terrestrial or most of the previously sampled lunar volcanic rocks.

The physical and mechanical properties of the soil at the Apollo 16 landing site are generally similar to those of the soils encountered at the previous Apollo sites. Data obtained using the self-recording penetrometer have provided a basis for quantitative study of stratigraphy, density, and strength characteristics. These results and crew observations, photographs, and soil samples (particularly the core-tube samples) have been used to develop the following preliminary conclusions.

a. Soil cover appeared to blanket all areas visited or observed at the Descartes landing area.

b. Soil properties are variable on regional and local (1 meter) scales.

c. Visibility degradation by blowing dust was less during the Apollo 16 lunar module descent than during previous missions, probably because of a faster descent rate and a higher sun angle rather than a difference in soil conditions.

d. The grain-size distributions of soil samples from the Descartes area are comparable to those from other areas of the moon, although distributions for most Descartes samples fall toward the coarser edge of a composite distribution.

e. The drive-tube samples indicate that soil density increases with depth, but the overall range of densities (1.40 to 1.80 grams per cubic centimeter) is slightly less than the range (1.36 to 2.15 grams per cubic centimeter) found for Apollo 15 core-tube samples.

f. South Ray crater material appears to cover the station 4 area to depths of 20 to 50 centimeters. Descartes Formation material may have been found at greater depths.

g. Density distributions with depth for the Apollo 16 deep-drill-stem samples are distinctly different from those of Apollo 15 and suggest that the modes of soil deposition at the two sites may have been different.

### 3.2.6 Geology of the Apollo 17 Landing Site

The Apollo 17 landing site was named Taurus-Littrow because of its proximity to the Montes Taurus (Taurus Mountains) and the crater Littrow. The lunar module landed on the flat floor of a deep narrow valley bounded by steep-sided mountain blocks that form part of the mountainous eastern rim of Mare Serenitatis (Sea of Serenity, referred to geologically as the Serenitatis Basin). The blocks are thought to be bounded by high-angle faults that are largely radial and concentric to the Serenitatis Basin. Hence, the valley itself is interpreted as a graben formed at the time of the Serenitatis impact. Figure 3-11 shows the landing site and the major geological features* that were examined by the Apollo 17 crew. During their stay on the lunar surface, the Apollo 17 crew traversed a total of about 34 kilometers, collected over 110 kilograms of rocks and soil, and took more than 2200 photographs. Their traverses span the full width of the Taurus-Littrow valley, as shown in figure 3-12.* Much of the following discussion was exerpted from reference 3-12.

The highlands surrounding the valley can be divided on the basis of morphology into (1) high smooth massifs; (2) smaller, closely spaced domical hills referred to as the Sculptured Hills; and (3) materials of low hills adjacent to the massifs and the Sculptured Hills. Boulders that had rolled down the slopes of the massifs north and south of the valley provided samples of that area. These boulders are composed of complex breccias that are generally similar to those returned from the Apollo 15 and 16 missions.

Materials of the valley fill were sampled at many stations. Ejecta around many craters on the valley floor consists of 3.8-billion-year-old basalts, showing that the graben was partly filled by lava flows. A relatively thick layer (approximately 15 meters) of unconsolidated material overlies the subfloor basalt; this debris consists largely of finely comminuted material typical of the lunar regolith. For the most part, this is impact-generated regolith similar to that developed on mare basalts elsewhere on the moon. The central cluster ejecta, the light mantle, and the ejecta of Shorty and Van Serg Craters are discrete deposits recognized within the regolith.

The young pyroclastic "dark mantle" anticipated before the mission was not recognized in the traverse area as a discrete surface layer. However, soil consisting of orange glass spheres was collected. This soil most likely originated from volcanic fire fountains that accompanied lava extrusion to form irregularly shaped layers that are now buried. Strong photogeologic evidence for the existence of a dark mantle in parts of the highlands still exists. Albedo measurements show that abnormal surface darkening, consistent with the concept of the introduction of exotic dark material increases to the east and south in the Taurus-Littrow area. The dark mantle may have accumulated shortly after the extrusion of the subfloor basalt.

The "light mantle" is an unusual deposit of high-albedo material with finger-like projections that extend 6 kilometers across dark plains from the South Massif. Rock fragments collected from the light mantle are similar in lithology to the breccias of the South Massif. This similarity supports the hypothesis that the light mantle is an avalanche deposit formed from loose materials on the face of the South Massif. A cluster of secondary craters on the top of the South Massif may record the impact event that initiated the avalanche. Size-frequency distribution and morphologies of craters on the light mantle suggest that its age is comparable to that of Tycho Crater, on the order of 100 million years.

Fine-grained soil, darker than the underlying unconsolidated debris, was recognized at the surface at Shorty Crater, at Van Serg Crater, on the light mantle, and on the massif talus. The soil is thin (e.g., 0.5 centimeter at Shorty, and about 7 centimeters on the flank of Van Serg) and probably represents the regolith that has formed on these young ejecta or talus surfaces. Relatively young structural deformation in the landing area is recorded by the Lee-Linclon Scarp and by small fresh grabens that trend northwest across the light mantle. The sharp knickpoint at the base of the massifs may indicate that some fairly recent uplift of the massifs has kept the talus slopes active.

*The designations of the features shown in figures 3-11 and 3-12 are informal.

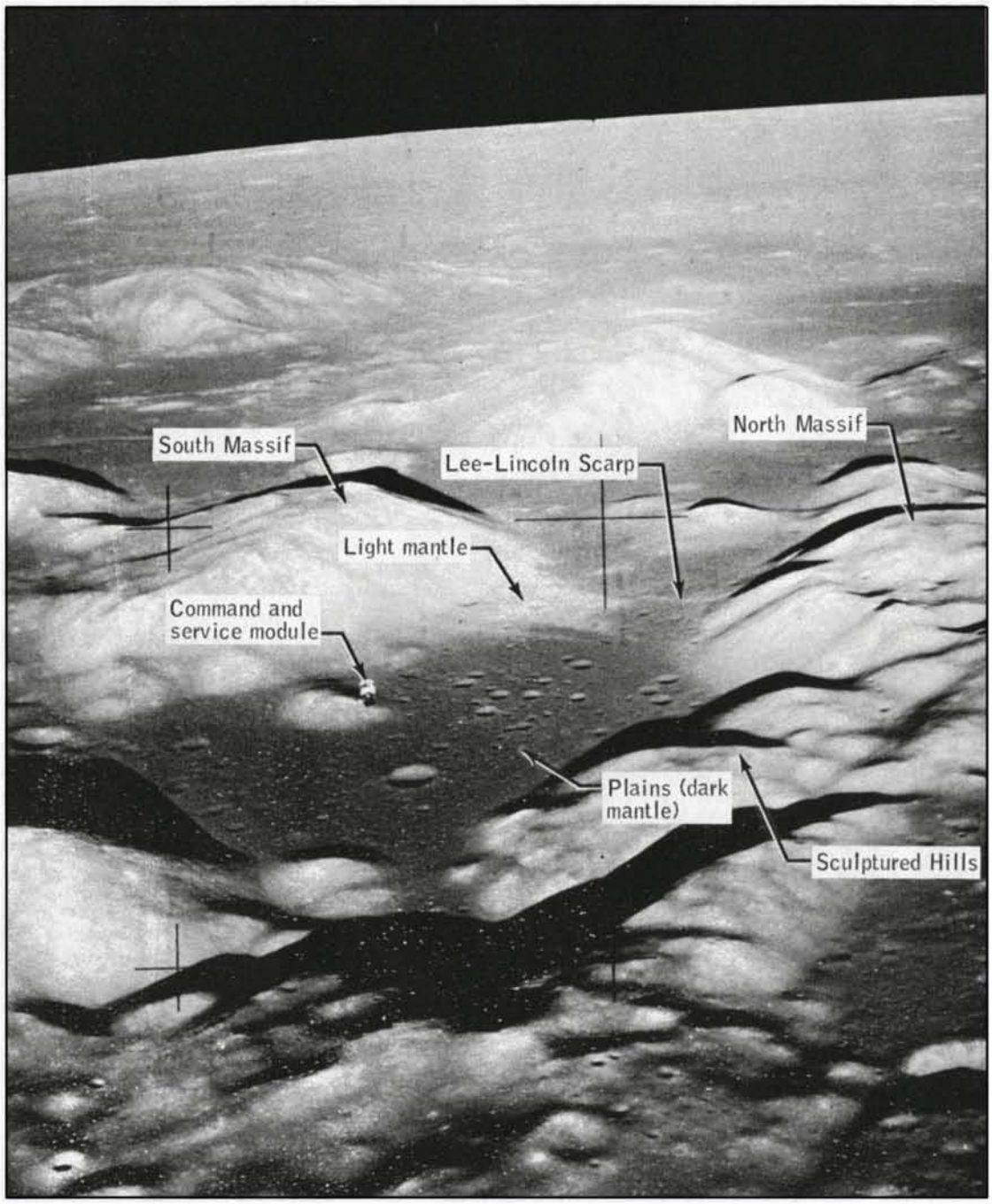


Figure 3-11.- Taurus-Littrow landing area.

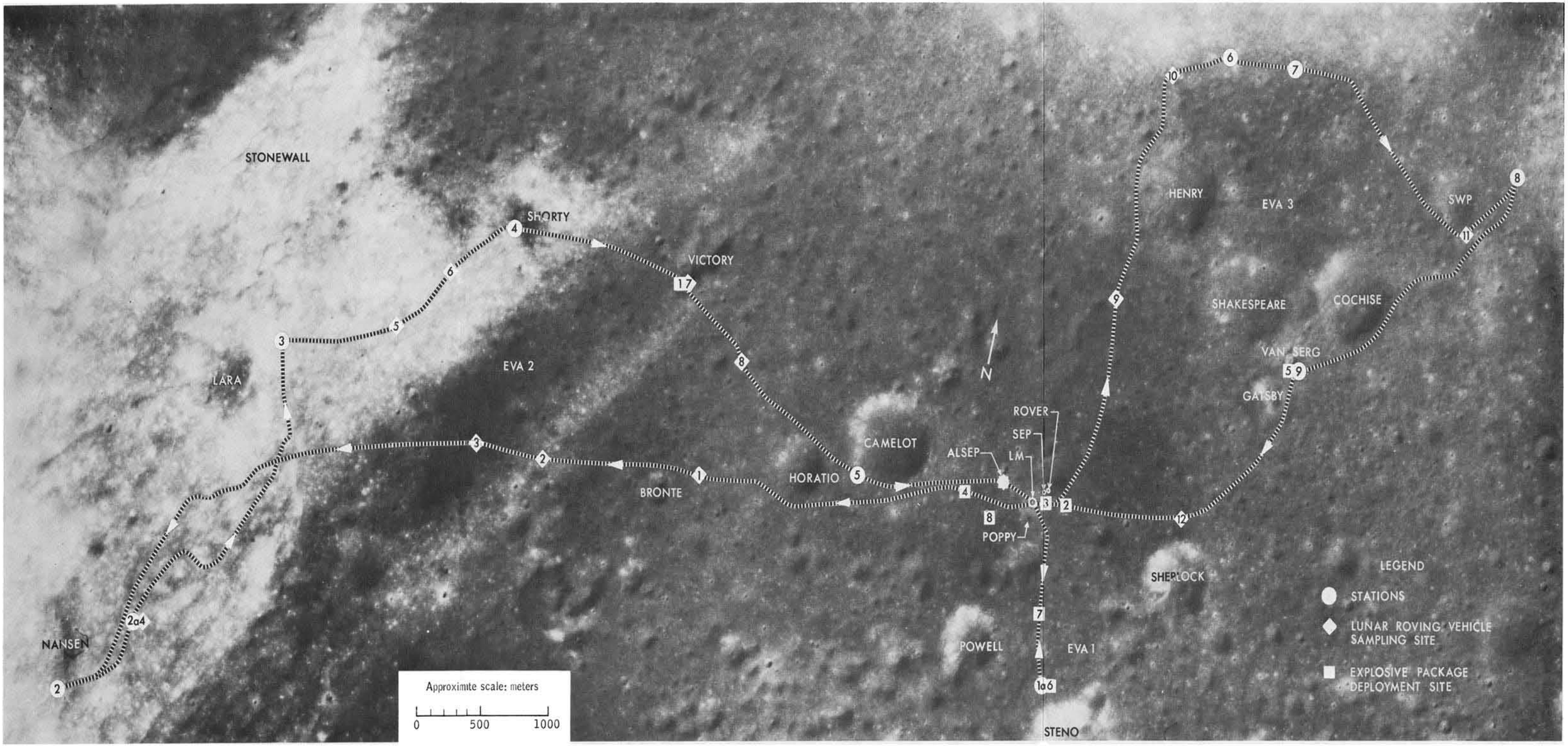


Figure 3-12.- Apollo 17 extravehicular activity traverses.

### 3.2.7 Geology and Soil Mechanics Equipment

3.2.7.1 Apollo lunar surface handtools.- The Apollo lunar surface handtools consisted of the items listed in table 3-II and illustrated in figure 3-13. The tools were continually upgraded as the lunar landing missions progressed based on the results of preflight and postflight evaluations and on geology requirements. The more significant changes are discussed in the following paragraphs.

a. Hammer: The hammer was used during all Apollo lunar surface extravehicular activities. As experience was gained, the hammer was modified as follows.

1. The spray aluminum coating on the head was changed to vacuum-deposited aluminum.

2. The originally pinned handle-to-head connection was changed to a "magnaformed" head.

3. The head was made heavier and larger to assist in obtaining better drive tube penetration.

4. Room-temperature-vulcanizing material strips were added to the handle to minimize twisting of the hammer in the hands.

b. Scoop: The scoop originally had a large pan and was nonadjustable. On Apollo 15, the design was changed to incorporate a smaller pan and an adjustable head. On Apollo 16 and 17, the adjustable feature was maintained but the pan was enlarged to obtain a larger sample.

c. Extension handle: The extension handle was designed to be mated with core tubes, scoops, hammer, and rake. Field tests and flight evaluation indicated that the original handle design should be changed to prevent shearing of the core-tube adapter pins. Also, further evaluations indicated that a longer handle was desirable. Two handles were carried on the Apollo 16 and 17 missions instead of one.

d. Gnomon: The gnomon consisted of a gimbaled rod and a color chart mounted on a tripod. The rod indicated the gravitational vector, and the chart provided a standard for color comparison in photographic processing. (Before the Apollo 14 mission, a color chart was carried separately.) Postflight evaluations following the initial lunar landing missions indicated that the rod would oscillate for long periods of time before damping to a fixed position. The cumulative time in awaiting rod arrestment was severely restrictive to the overall surface activity. Therefore, a damping change was incorporated for the Apollo 15 through 17 missions. On Apollo 16, the gimbaled rod separated from the leg assembly while the gnomon was being removed from its stowage bag. To prevent recurrence on Apollo 17, the gimbal pivot pins were strengthened and additional lubrication was applied to the pivot/bearing interface.

e. Tongs: The tongs consisted of a set of opposing spring-loaded fingers attached to a handle and were used for picking up samples. Postflight evaluation of Apollo missions 11, 12, and 14 indicated a need for increased length, larger jaws, and additional closing force. These changes were incorporated for Apollo missions 15 through 17. Also, to conserve traverse time and to afford maximum flexibility in obtaining samples, two sets of tongs were carried on the Apollo 16 and 17 missions.

f. Adjustable trenching tool: The trenching tool was used on only one mission, Apollo 14. Experience indicated that the adjustable scoop could perform the trenching task on subsequent missions.

g. Rake: A rake was designed and built for the Apollo 15, 16, and 17 missions to meet the requirement of efficiently obtaining a number of small rock samples from the lunar surface or just below the surface. The rake served its purpose satisfactorily.

h. Core tubes/drive tubes/caps: The core tubes were originally designed to be driven into the lunar surface with the hammer. Postflight examination of the Apollo 11 samples indicated that the bit was degrading the samples. Furthermore, additional information on the cohesiveness of the lunar soil indicated that a "drive tube" with a larger diameter (increased from 2 to 4 centimeters) and an integral bit could be used. Effective with the Apollo 15 mission, drive tubes were successfully used to obtain samples. The components of a drive tube set consisted of

TABLE 3-II.- GEOLOGY AND SOIL MECHANICS TOOLS AND EQUIPMENT

| Item | Mission use | | | | | |
|---|---|---|---|---|---|---|
| | 11 | 12 | 14 | 15 | 16 | 17 |
| Apollo lunar surface hand tools: | | | | | | |
| Hammer | 1 | 1 | 1 | 1 | 1 | 1 |
| Large scoop | 1 | 1 | 1 | | | |
| Adjustable scoop | | | | 1 | 1 | 1 |
| Extension handle | 1 | 1 | 1 | 1 | 2 | 2 |
| Gnomon | 1 | 1 | 1 | 1 | 1 | 1 |
| Tongs | 1 | 1 | 1 | 1 | 2 | 2 |
| Adjustable trenching tool | | | 1 | | | |
| Rake | | | | 1 | 1 | 1 |
| Core tubes | 2 | 4 | 6 | | | |
| Core tube caps | 2 | 1 | | | | |
| Drive tubes (lower) | | | | 5 | 5 | 5 |
| Drive tubes (upper) | | | | 4 | 4 | 4 |
| Drive tube cap and bracket assembly | | | | 3 | 5 | 5 |
| Drive tube tool assembly | | | | | 1 | 1 |
| Spring scale | 1 | 1 | | | | |
| Sample scale | | | 1 | 1 | 1 | 1 |
| Tool carrier | | | | 1 | 1 | |
| Sample return container | 2 | 2 | 2 | 2 | 2 | 2 |
| Bags and special containers: | | | | | | |
| Small sample bags | 5 | | | | | |
| Documented sample bags (15-bag disp) | 1 | 3 | 1 | | | |
| Documented sample bags (20-bag disp) | | | | 6 | 7 | 6 |
| Documented sample bags (35-bag disp) | | 1 | 2 | | | |
| Round documented sample bag | | | | | | 48 |
| Protective padded sample bag | | | | | 2 | |
| Documented sample weigh bag | 2 | 4 | 4 | | | |
| Sample collection bag | | | | 2 | 2 | 2 |
| Gas analysis sample container | 1 | 1 | | | | |
| Special environmental sample container | | 1 | 3 | 3 | 1 | 1 |
| Core sample vacuum container | | | | | 1 | 1 |
| Solar wind composition bag | 2 | 1 | 1 | | | |
| Magnetic shield sample container | | | 1 | | | |
| Extra sample collection bags | | | | 4 | 6 | 6 |
| Organic control sample | | 1 | 2 | 2 | 2 | |
| Lunar surface sampler (Beta cloth) | | | | | 1 | |
| Lunar surface sampler (velvet) | | | | | 1 | |
| Lunar roving vehicle soil sampler | | | | | | 1 |
| Magnetic sample assembly | | | | | 1 | |
| Tether hook | 1 | 1 | 1 | | | |
| Lunar surface drill | | | | 1 | 1 | 1 |
| Core stem with bit | | | | 1 | 1 | 1 |
| Core stems without bit | | | | 5 | 5 | 5 |
| Core stem cap and retainer assembly | | | | 2 | 2 | 2 |
| Self-recording penetrometer | | | | 1 | 1 | |

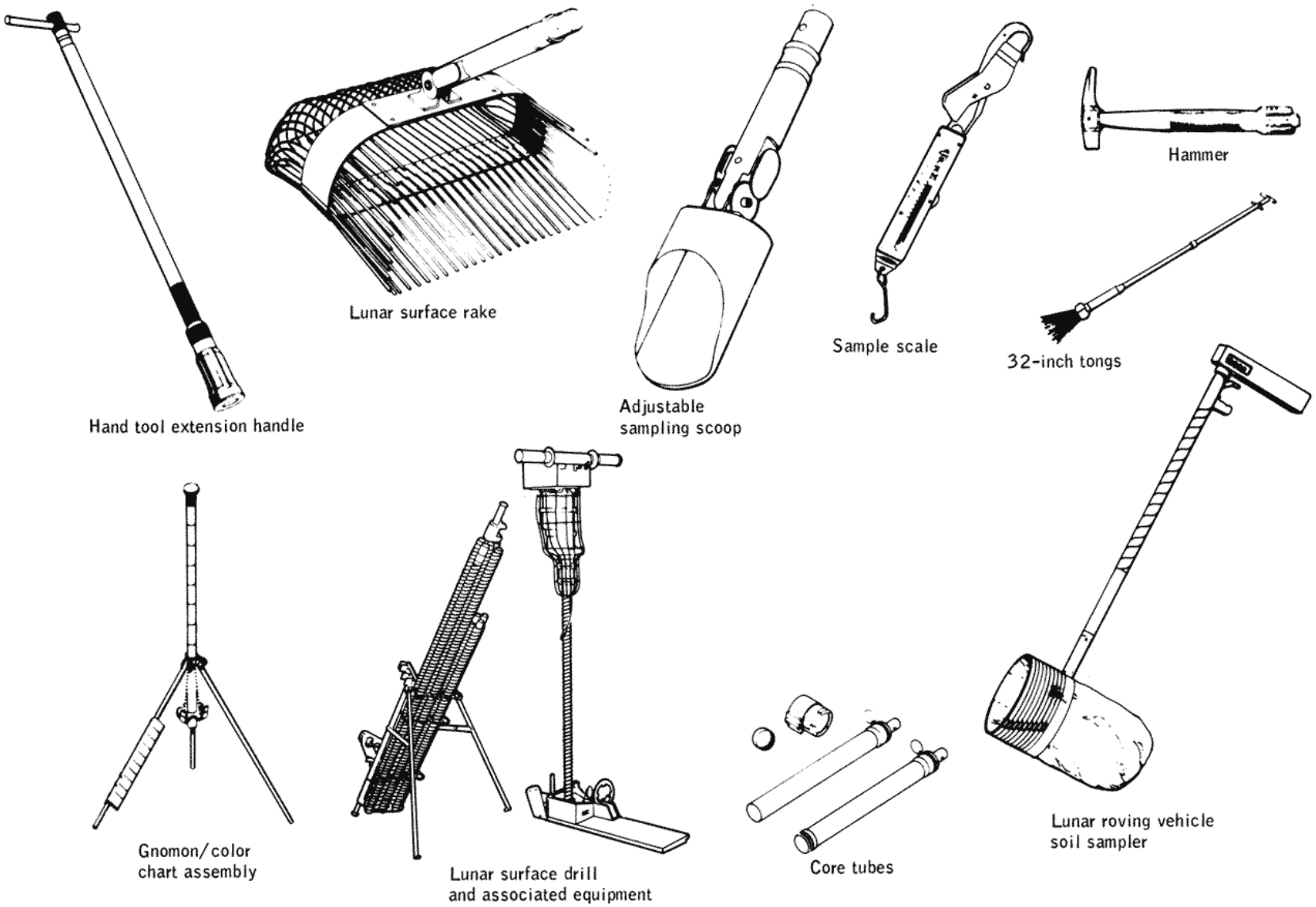


Figure 3-13.- Lunar geology and soil mechanics tools.

the drive tube, a drive-tube tool, and a cap dispenser. Deep samples were obtained by joining tubes in series. The drive-tube tool was used to position a keeper against the core sample to preserve its integrity. The cap dispensers were mounted on the handtool carrier and contained Teflon caps to seal the tubes after sample collection.

i. Sample scale: The sample scale was used on Apollo 14 through 17 to weigh lunar samples before lift-off to assure that the total weight did not exceed the permitted weight.

3.2.7.2 Tool carriers.- The original Apollo lunar handtool carrier was designed to accommodate the early tool configurations and to be hand-carried or mounted on the modular equipment transporter used on the Apollo 14 mission. With the advent of the lunar roving vehicle, a new tool carrier was needed that could be mounted on that vehicle or, if the vehicle became inoperative, could be removed and hand-carried during walking traverses. The modified tool carrier was used as a stowage rack for the hammer, gnomon, scoop, and the drive-tube tool assembly; the tool carrier also accommodated the extension handle and the tongs.

3.2.7.3 Apollo lunar sample return container.- The Apollo lunar sample return container (fig. 3-14) was designed to provide a vacuum environment for the return of lunar samples. The containers and their contents were cleaned at the manufacturing facility to a cleanliness level of less than 10 nanograms of residue per square centimeter. The containers and their contents were then shipped to the Lunar Receiving Laboratory for premission conditioning, which consisted of sterilization to remove earth organisms before sealing under a vacuum (approximately $10^{-6}$ torr).

No major design changes were made throughout the lunar landing flights. However, the following minor changes were incorporated.

a. A York mesh liner was added on Apollo 12 to give better protection to the container and its contents, and the liner was reduced in thickness to increase the volume of the container.

b. On Apollo 14 and subsequent missions, a skirt was added to prevent debris from getting into the seal, to facilitate closing, and to ensure maintenance of vacuum.

Two organic samplers (fig. 3-15), each consisting of several rolls of York mesh packing material in a Teflon bag, were used to determine the quantity of organic compounds introduced before and during the translunar portion of a mission. One sampler was analyzed and sealed before flight. The other was placed in the sample return container, removed for environmental exposure while on the lunar surface, sealed, and returned to the container.

3.2.7.4 Bags and special containers.- In addition to the actual collection of samples, a requirement existed to protect, document, and identify the various samples. To perform these tasks, numerous types of bags and special containers were designed, some of which are described in the following paragraphs and illustrated in figure 3-16.

a. Documented sample bags: The crewmen used documented sample bags to identify and document the individual samples as they were collected. On Apollo 17, a quantity of round sample bags were supplied. These bags were used in conjunction with the lunar roving vehicle soil sampler (par. 3.2.7.6).

b. Special environmental sample container: These devices were designed to contain samples of lunar soil and/or rocks to be used in specific experiments on return to earth. The containers provided a vacuum environment to protect the samples from contamination in case the Apollo lunar sample return container leaked.

c. Core sample vacuum container: The core sample vacuum container was provided as a receptacle for a drive tube so that a pristine subsurface sample could be protected in a vacuum.

d. Protective padded sample bag: The protective padded sample bag was used for returning a fragile lunar sample so that maximum protection could be afforded to the surface of the sample. Bags of this type were carried only on the Apollo 16 mission.

e. Documented sample weigh bags/sample collection bags: The weigh bags (Apollo 11, 12, and 14) and the sample collection bags (Apollo 15, 16, and 17) were large bags into which the documented samples were placed for insertion into the Apollo lunar sample return container for return

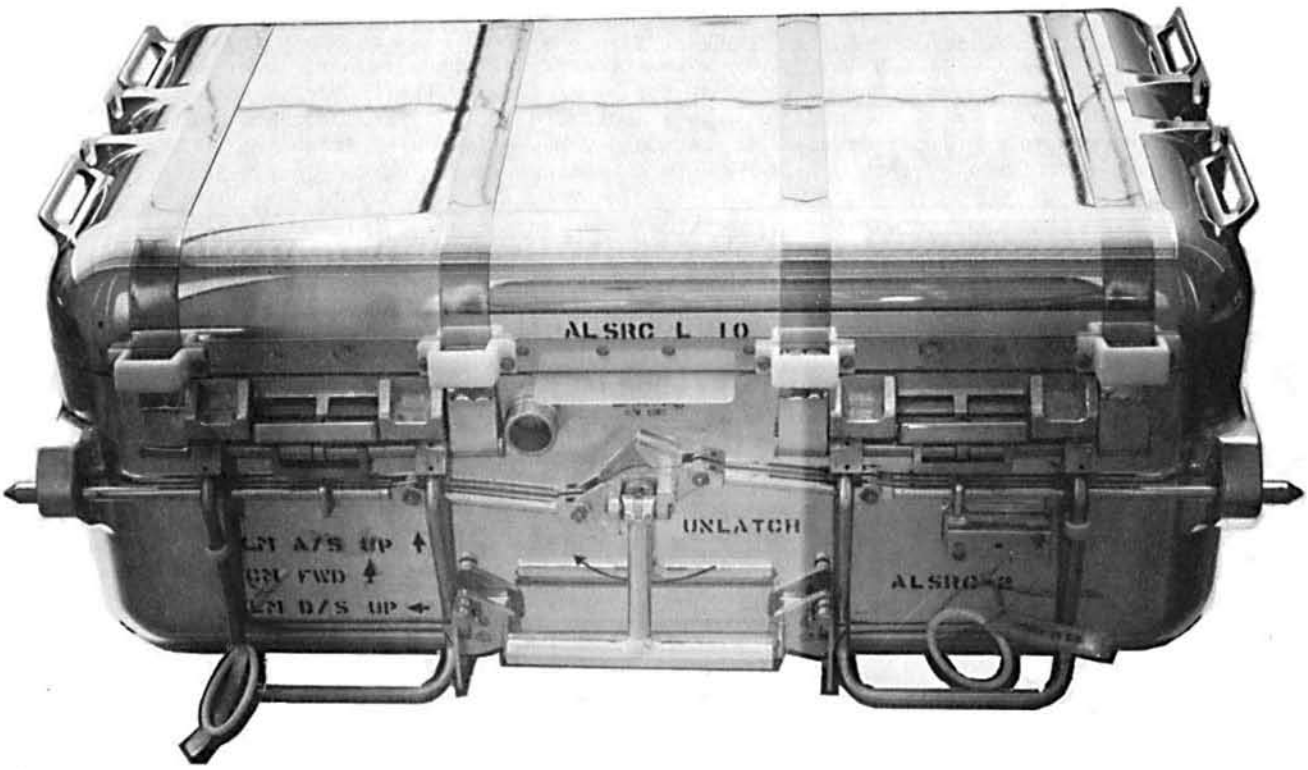


Figure 3-14.- Apollo lunar sample return container.

Figure 3-15. - Organic sampler.

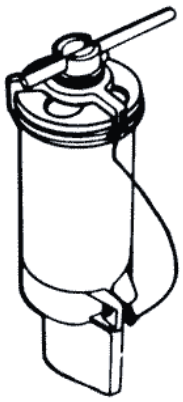

Special environmental sample container

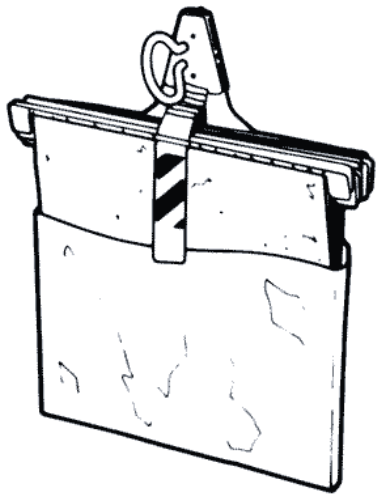

Documented sample bag dispensers

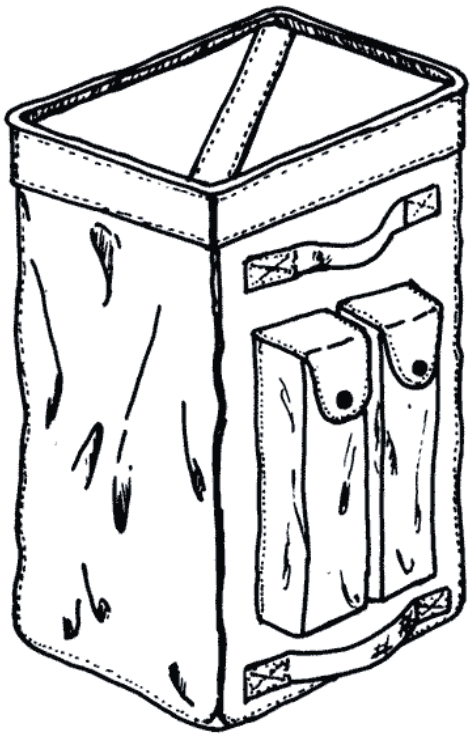

Sample collection bag

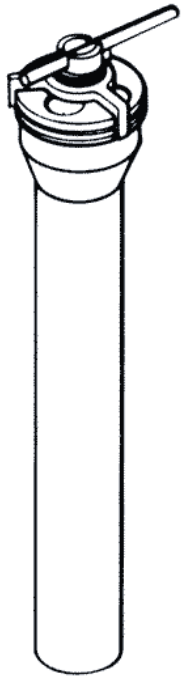

Core sample vacuum container

Figure 3-16.- Sample bags and special containers.

to earth. The bags were originally made of Teflon film; however, after postflight evaluation indicated that this material would tear, the design was changed to incorporate a laminated Teflon fabric/Teflon film, and the name was changed from sample weigh bags to sample collection bags.

3.2.7.5 Lunar surface sampler.- The lunar surface sampler was used with the universal handling tool. The device, which consisted of a plate assembly that contained either a Beta cloth or a velvet cloth accumulation surface, was used to obtain undisturbed surface layer lunar samples. A hinged cover plate protected the sample on the return-to-earth flight.

3.2.7.6 Lunar roving vehicle soil sampler.- The lunar roving vehicle soil sampler was a device that when mated with the universal handling tool, allowed the lunar surface crewman to obtain soil samples without dismounting from the lunar roving vehicle.

3.2.7.7 Penetrometers.- On the Apollo 14 mission, the active seismic experiment geophone cable anchor shaft was used as a simple penetrometer to obtain soil mechanics data. The 0.87-centimeter-diameter 68.0-centimeter-long aluminum shaft had a 30° core tip at the bottom and was attached to the extension handle at the top. Alternating black and white stripes, each 2.0 centimeters long, provided a depth scale reference in photographs of the penetrations achieved. The crewman pressed the penetrometer into the lunar surface with one hand for a first measurement and then with two hands for a second measurement. Preflight 1/6-earth-gravity tests provided a comparative calibration for the penetrometer.

A self-recording penetrometer, used on the Apollo 15 and 16 missions (fig. 3-17), provided for the first time quantitative measurement of forces of interaction between the soil near the lunar surface and a soil testing device. The instrument provided data on soil penetration resistance as a function of depth below the lunar surface. The penetrometer could penetrate the lunar surface a maximum of 76 centimeters. On the Apollo 15 mission, the penetrometer could measure a penetration force to a maximum of 111 newtons. As a result of the Apollo 15 experience, the force spring was changed to increase the maximum measurement to 215 newtons. On the later lunar landing missions, the successful functioning of the self-recording penetrometer and core tubes, as well as the general surface-contact equipment, resulted in data which provided a basis for the quantitative study of stratigraphy, density, and strength characteristics of the lunar soil.

3.2.7.8 Apollo lunar surface drill.- The purpose of the Apollo lunar surface drill (fig. 3-18) was to provide two 2.4-meter-deep holes for emplacement of probes for the heat flow experiment. The drill was also used to obtain a continuous subsurface core sample that was 2.4 to 3.0 meters long to be returned to earth for laboratory analyses. In addition, on Apollo 17, the hole produced by the core drilling was used for emplacement of the neutron probe experiment.

The drill was a battery-powered, electric-drive, rotary-percussion-type drill which delivered vertical blows to the rotating spindle, driving carbide-tipped hollow bore stems and core stems. The boron-fiberglass bore stems and titanium core stems were sectionalized, allowing the desired penetration into the lunar surface while maintaining the capability for handling and stowage by the lunar surface crewmen.

Two significant hardware changes resulted from mission experience: bore stem joint redesign and the incorporation of a deep-core extractor. Both changes were made because of the high density of the lunar subsurface encountered on Apollo 15. Before that mission, the subsurface density data had been based on drive-tube core information, which supported Surveyor data that showed the bulk density of the regolith to be relatively low (90 to 110 pounds per cubic foot). This soil density was used for drill testing. However, these samples had been taken from a depth of only 0.6 to 0.9 meter. When the Apollo 15 drill went beyond this depth, the density increased significantly (to 130 pounds per cubic foot). With this additional knowledge, a new bore stem design was introduced and tested in simulated soil models compacted to a maximum bulk density. Other changes included a core-stem extractor that was developed to provide additional capability for jacking the deep-core sample from the subsurface. The changes were incorporated for the Apollo 16 mission.

A continuous improvement in drill performance was obtained from one mission to the next. In each case, the effectiveness of the hardware improvements was demonstrated. Time lines for the drill-associated tasks were nominal for Apollo 16 and 17.

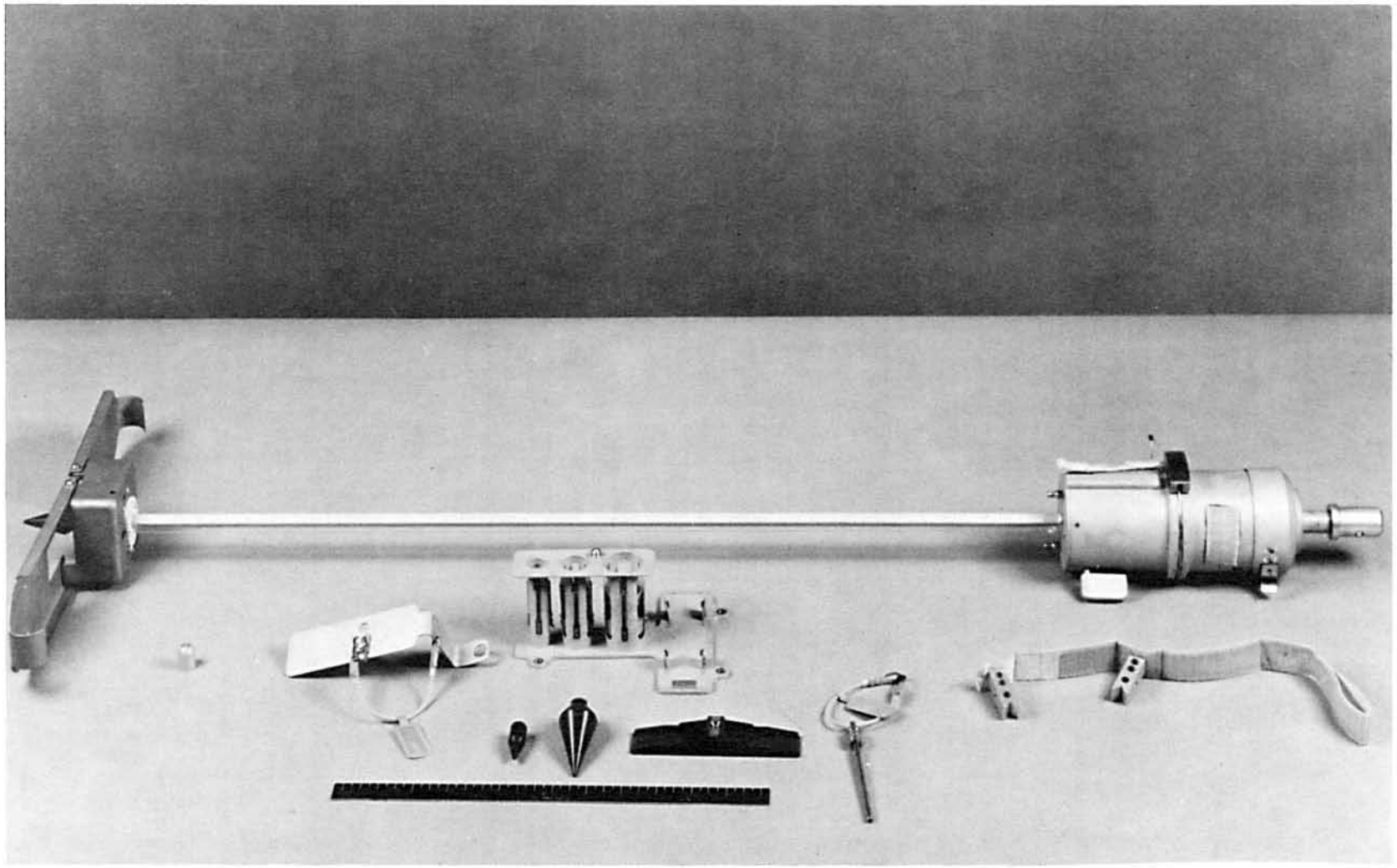

Figure 3-17.- Self-recording penetrometer.

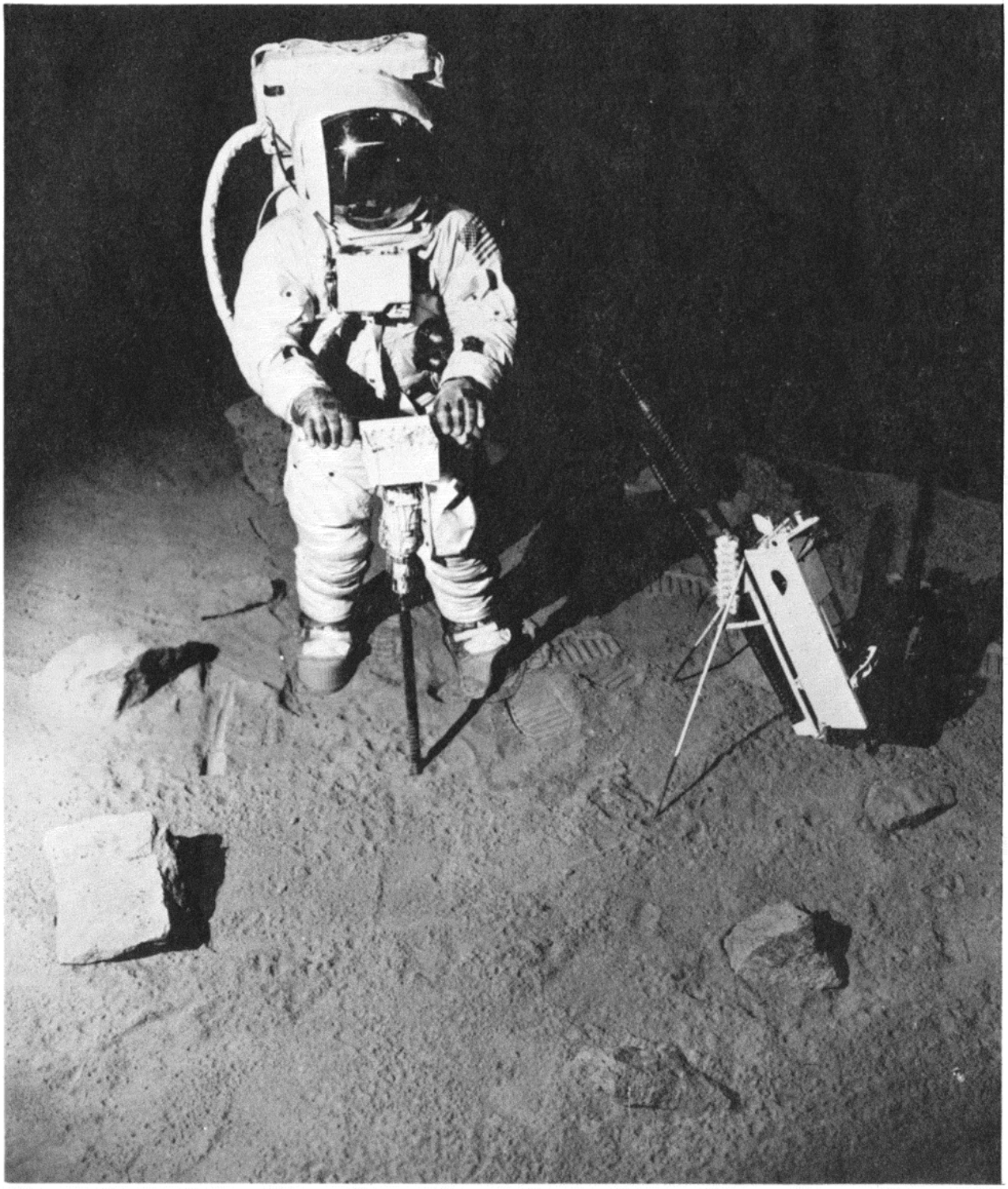

Figure 3-18.- Apollo lunar surface drill.

### 3.2.8 Apollo Lunar Surface Experiments Package/Central Station

As reflected in table 3-I, a number of experiments were deployed or conducted on the lunar surface during the six lunar landing missions. To minimize weight, volume, and power requirements, several experiments were integrated into a single system, the Apollo lunar surface experiments package. The experiments that comprised the package varied from mission to mission, as shown in table 3-III. The other lunar surface experiments were self-contained.

Figure 3-19 illustrates a typical Apollo lunar surface experiments package (Apollo 15 configuration). Subpackage 1 contained magnetometer, passive seismic, and solar wind spectrometer experiments. The lower portion of subpackage 1 housed the central electronics which included the data handling, radio-frequency up-link and down-link, and power conditioning and distribution subsystems. In the erected configuration, the electronic and thermal control portions of subpackage 1 are known as the central station. A helical S-band antenna was also carried on subpackage 1. The antenna was attached to an aiming mechanism and an antenna mast that was locked into the primary structure. Subpackage 2 consisted of a rigid structural pallet on which were mounted one or two experiments, a radioisotope thermoelectric generator, the antenna aiming mechanism, special deployment tools, and, on two flights only, the geological handtool carrier. All equipment was removed from subpackage 2 except the generator. Because the fuel element for the generator was very hot, the fuel element was carried to the moon in a separate protective cask assembly. The fuel cask assembly and the two subpackages were stowed as shown in figure 3-20.

The radioisotope thermoelectric generator developed for the Apollo lunar surface experiment package was designated "system for nuclear auxiliary power no. 27" (SNAP-27). Differing in design and materials from the previously developed SNAP-19 generator (for Nimbus and Pioneer), SNAP-27 has been the only nuclear power generator developed for manned fueling and has the largest power output of those developed for space use. Although the original design specification was for a 50-watt generator, the output developed by the actual flight hardware exceeded 70 watts in the hard vacuum environment - sufficient to handle the Apollo lunar surface experiment package power requirements which kept increasing for the growing science program. Initial power output for Apollo 12 on the lunar surface was 74 watts (66.5 watts after 4 years), for Apollo 14 was 73 watts (68 watts after 3 years), for Apollo 15 was 75 watts (69.4 watts after 3 years), for Apollo 16 was 70.9 watts (69.5 watts after 2 years), and for Apollo 17 was 77.5 watts (76.9 watts after 1 year). The actual rate of decrease in output (primarily the result of changes in the lead telluride material from time, temperature, and pressure) for all five flight radioisotope thermoelectric generators has been considerably less than calculated predictions (about one-fourth the design specification rate).

The Apollo lunar surface experiments package systems flown on Apollo missions 12 through 16 were designed for a nominal lunar operating period of 1 year. The system flown on Apollo 17 incorporated various design improvements to meet a requirement of 2 years of lunar operation and to eliminate operational problems encountered on earlier systems. These changes can be broadly categorized into: the use of logic elements with improved reliability, added redundancy with refined techniques for redundant component selection, and design improvements based on lunar operating experience. Plans were that when the output of the radioisotope thermoelectric generator decreased to a level too low to provide enough power for the full complement of experiments in the worst case condition (lunar sunrise), selected experiments would be commanded off or to a standby mode for lower power demand. Consequently, on June 14, 1974, three experiments (Apollo 12 lunar surface magnetometer, and Apollo 15 lunar surface magnetometer and solar wind spectrometer, all of which had been unable to provide science data for an extended period) were terminated so as to make more power available for other experiments. These were the first experiments in the Apollo lunar surface experiments package program to be terminated by command. The only other experiment to have its operation on the lunar surface terminated was the Apollo 12 cold cathode gage experiment, which turned itself off in November, 1969, because of a circuit failure.

Overall operation of the Apollo lunar surface experiments package central station has been excellent in all areas of the mechanical, thermal, and electrical designs. All central stations deployed on the lunar surface continue to operate as planned; the Apollo 12 central station has exceeded its 1-year life requirement by more than 3 years. Although no signal processing component failure has occurred during lunar operation, numerous operational abnornalities have required procedural changes. The more significant problems and failures occurring during the hardware test phase and lunar operation are summarized in the following paragraphs.

TABLE 3-III.- APOLLO LUNAR SURFACE EXPERIMENTS PACKAGE ARRAYS AND STATUS

| Experiment | Apollo 12 | Apollo 13 | Apollo 14 | Apollo 15 | Apollo 16 | Apollo 17 |
|---|---|---|---|---|---|---|
| | Array A | Array B | Array C | Array A-2 | Array D | Array E |
| [a]Passive seismic | Short-period Z axis has displayed reduced sensitivity since deployment. | Not deployed. | Long-period Z axis inoperative since 3/20/72. Noisy data on long-period Y axis since 4/14/73. | Full operation. | Full operation. | |
| Active seismic | | | Mortar not fired. Geophone 3 data noisy since 3/26/71. Geophone 2 data invalid since 1/3/74. | | Three of four grenades launched. Mortar pitch sensor off scale after third firing on 5/23/72. | |
| Lunar surface magnetometer | Permanently commanded off 6/14/74. | | | Permanently commanded off 6/14/74. | Full operation. | |
| Solar wind spectrometer | Full operation except for intermittent modulation drop in two proton energy levels each lunation since 11/5/71. | | | Permanently commanded off 6/14/74. | | |
| Suprathermal ion detector | Periodically commanded off to prevent high voltage arcing at elevated lunar day temperatures since 9/9/72. | | Periodically commanded to standby operation to avoid mode changes at elevated lunar day temperatures since 3/29/72. | Periodically commanded to standby operation to avoid mode changes at elevated lunar day temperatures since 9/13/73. | | |
| Heat flow | | Not deployed. | | Probe 2 not to full depth intended, but experiment provides useful data. | Inoperative since emplacement. | Full operation. |
| Cold cathode ion gage | Inoperative. Failed 14 hours after turn-on 11/20/69. | Not deployed. | Intermittent science data since 3/29/72. | Intermittent science data since 2/22/73. | | |
| Lunar ejecta and meteorites | | | | | | Thermal control design not optimum for Apollo 17 site. Instrument operated for about 75 percent of lunation. |

TABLE 3-III.- APOLLO LUNAR SURFACE EXPERIMENTS PACKAGE ARRAYS AND STATUS - Concluded

| Experiment | Apollo 12 | Apollo 13 | Apollo 14 | Apollo 15 | Apollo 16 | Apollo 17 |
|---|---|---|---|---|---|---|
| | Array A | Array B | Array C | Array A-2 | Array D | Array E |
| Lunar seismic profiling | | | | | | Full operation; however, operation is limited to prevent interference with other experiments. |
| Lunar atmospheric composition | | | | | | No science data since 10/17/73. Instrument is periodically cycled off for temperature control. |
| Lunar surface gravimeter | | | | | | Instrument error prevents normal operation. Some science data being received using other modes of operation. |
| [a]Laser ranging retroreflector | | | Full operation. | Full operation. | | |
| Charged particle lunar environment | | Not deployed. | Analyzer B failed 4/8/71. Analyzer A undervoltage condition since 6/6/71. Instrument operated 50 percent of each lunation. | | | |
| [a]Dust detector | Full operation | Not deployed. | Full operation. | Full operation | | |
| [a]Central station | Data processor Y apparently failed 5/3/74. Normal operation using processor X. | Not deployed. | Full operation | Full operation. | Full operation. | Full operation. |

[a]Included in early Apollo scientific experiments package deployed on Apollo 11 mission. Laser ranging retroreflector remains in full operation.

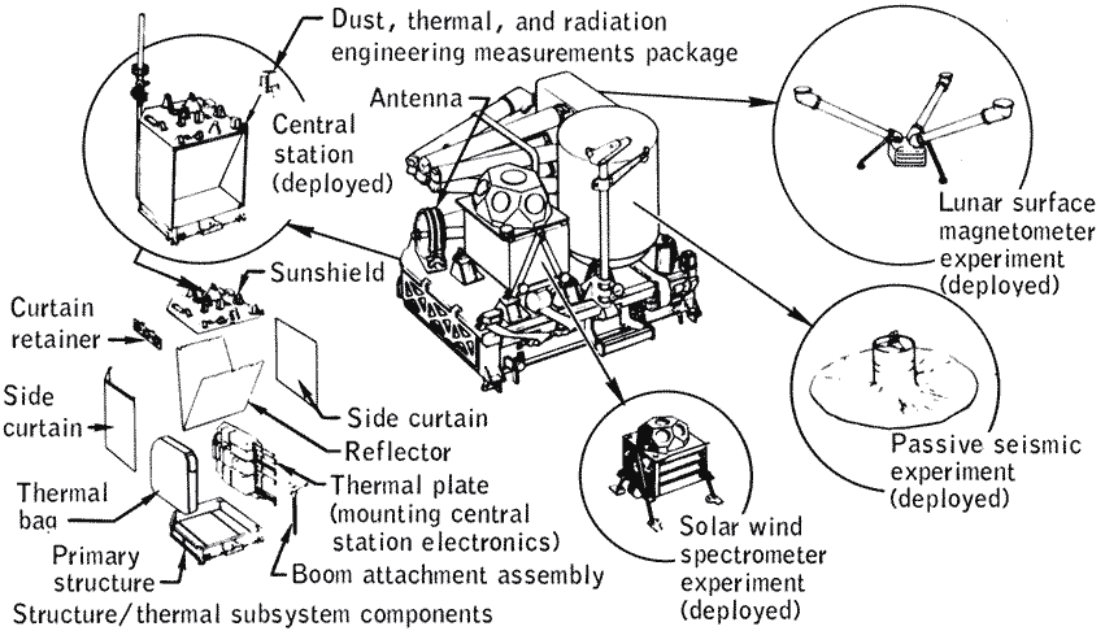


(a) Subpackage 1

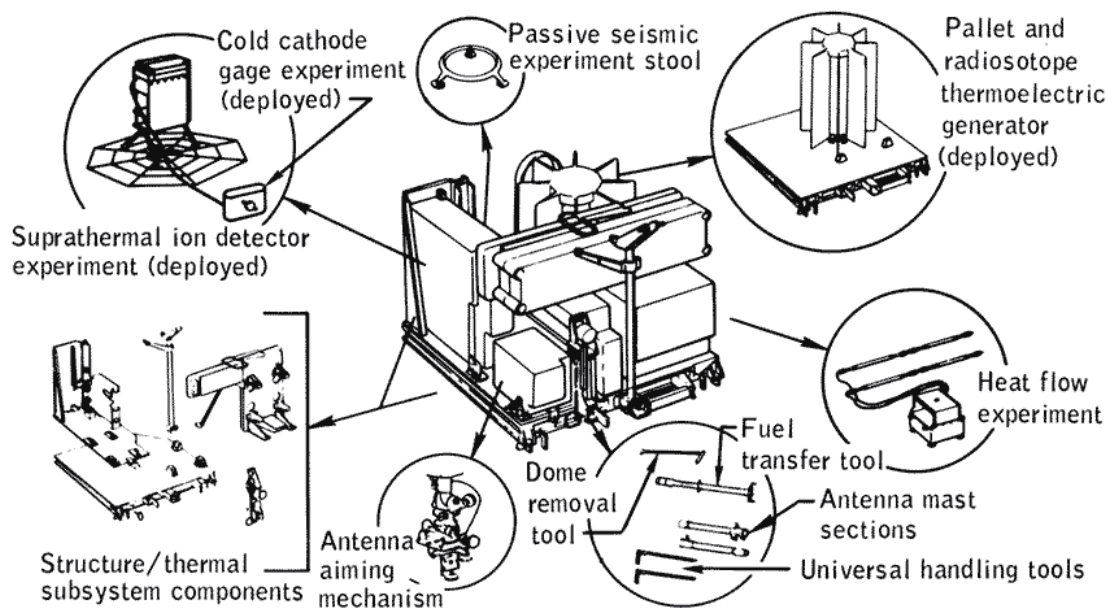


(b) Subpackage 2

Figure 3-19.- Apollo 15 lunar surface experiments package.

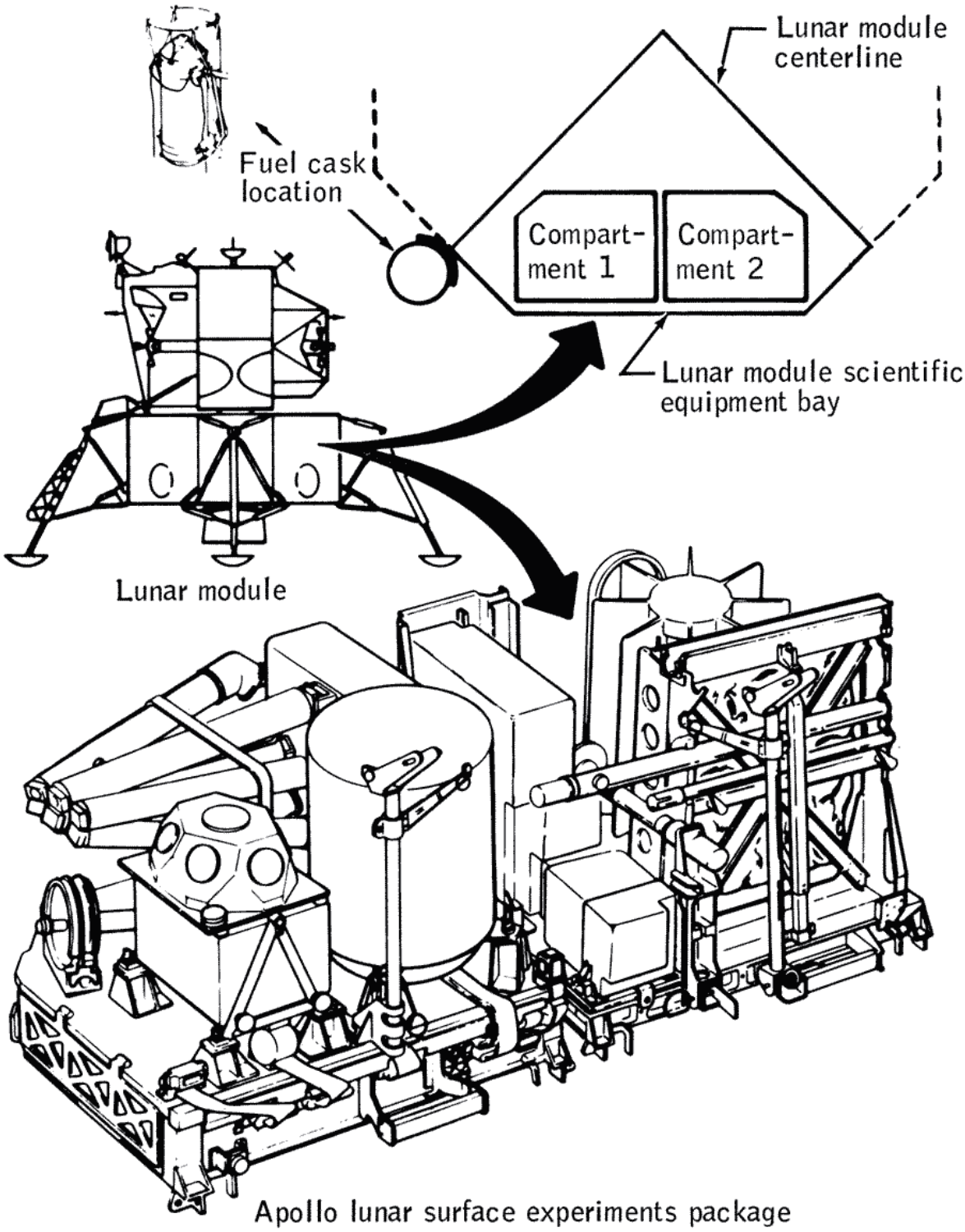


Figure 3-20.- Stowage of Apollo lunar surface experiments package in lunar module.

a. Analog multiplexer - analog/digital connector: The system uses a 90-channel analog multiplexer the output of which is digitized to an 8-bit word. Earlier designs used plastic-encapsulated field-effect transistor switches in the multiplexer input; the transistors were subjected to prescribed tests and burn-in to assure reliability. During ground tests, numerous transistor failures occurred. The failures were traced to contamination due to the transistors not being adequately sealed. However, no Apollo 12 and 14 lunar surface experiments package failures occurred on the lunar surface. The design used on the Apollo 15 experiments package was upgraded to use a field-effect transistor in a ceramic package. The components used on the Apollo 16 and 17 experiments packages were completely redesigned with full redundancy on all 90 analog channels.

b. Unexpected status changes: The demodulator section of the command decoder proved to be sensitive to receiver noise output occurring in the absence of an up-link signal. In operation, however, this condition did not prove to be a major problem. Operational procedures were modified to assure that the system was illuminated with an up-link signal, rendering the demodulator section insensitive to noise when the crew was on the surface immediately following deployment. On the Apollo 16 package, a new receiver design resulted in a lower noise sensitivity; on the Apollo 17 system, a new decoder design completely eliminated the problem.

### 3.2.9 Passive Seismic Experiment

The passive seismic experiment was designed to detect vibrations of the lunar surface and provide data that can be used to determine the internal structure, physical state, and tectonic activity of the moon. A secondary purpose is to determine the number and mass of meteoroids that strike the lunar surface. The instrument is also capable of measuring tilts of the lunar surface (tides) and changes in gravity.

The first of five passive seismometers was emplaced on the lunar surface during the Apollo 11 mission. This instrument was part of the early Apollo scientific experiments package and was powered by a solar panel array rather than by the radioisotope thermoelectric generator used on the later missions. The instrument supplied long-period seismometer data for 20 days during the first and second lunar days after emplacement (a period of about 1 month). Short-period seismometer data were received for a longer time, with down-link transmissions ending approximately 4-1/2 months after activation.

The four seismic stations emplaced during the Apollo 12, 14, 15, and 16 missions comprise a network that spans the near side of the moon in an approximate equilateral triangle with 1100-kilometer spacing between stations. (The Apollo 12 and 14 stations are 181 kilometers apart at one corner of the triangle.) As shown in figure 3-21, four seismometers are included in the experiment package at each station: three low-frequency components forming a triaxial set (one sensitive to vertical motion and two sensitive to horizontal motion), and a high-frequency component sensitive to vertical motion. Of the 16 separate seismometers, all but three are presently operating properly. The high-frequency component at the Apollo 12 station has failed to operate since initial activation. One of the low frequency seismometers at the Apollo 14 station (Z-axis) became inoperative after 1 year of operation and another (Y-axis) began transmitting noisy data midway through 1974. The frequency ranges of the passive seismic experiment components are compared to the ranges of other lunar surface seismic instruments in table 3-IV.

Several of the stations have exhibited thermal control problems. For collection of tidal data, limiting the instrument operating temperature to a band of approximately 1.1° K is desirable. This limitation was not achieved, partly because of problems with deployment of the thermal shroud. Corrective actions included the addition of weights to the outer edges of the shroud, the use of a Teflon layer as the outer shroud covering, and stitching of the shroud to prevent layer separation. Even so, an optimum shroud deployment was not achieved. thus, the heat loss during lunar night and the solar input incurred during the lunar day have been greater than desired.

The major findings to date are summarized (ref. 3-13):

Data from the impacts of lunar module ascent stages and launch vehicle S-IVB stages, combined with data from high-pressure laboratory measurements on returned lunar samples, provide information on lunar structure to a depth of approximately 150 kilometers. Information on lunar structure below this depth is derived principally from analysis of signals from deep moonquakes and distant meteoroid impacts.

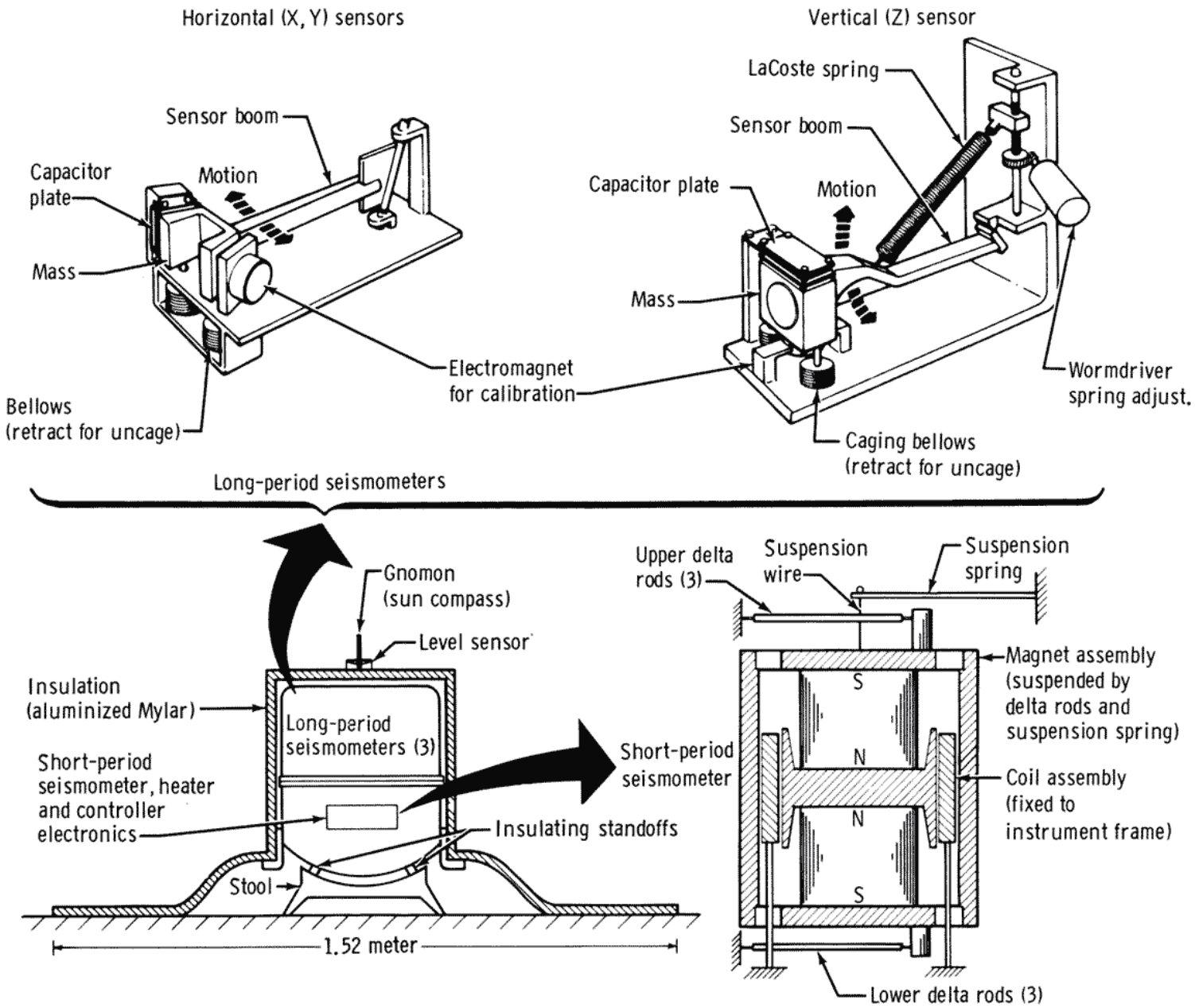


Figure 3-21. - Seismometer elements.

TABLE 3-IV.- RESPONSE SPECTRA FOR APOLLO SEISMIC EXPERIMENTS

| Experiment | Sensors | Apollo sites | Frequency range, Hz |
|---|---|---|---|
| Passive seismic: | | | |
| Short period | 1 vertical | [a]12, 14, 15, 16 | 0.05 to 20 |
| Long period | 2 horizontal | 12, 14, 15, 16 | 0.004 to 3 |
| | 1 vertical | 12, [b]14, 15, 16 | 0.004 to 3 |
| Active seismic | 3 vertical | [c]14, 16 | 3 to 250 |
| Lunar seismic profiling | 4 vertical | 17 | 3 to 20 |
| Lunar surface gravimeter | 1 vertical | 17 | |
| Seismic | | | [d]0.05 to 16 |
| Free modes | | | [e]0.00083 to 0.048 |

[a]Short-period sensor data has displayed reduced sensitivity since deployment.

[b]Long-period vertical sensor data invalid since March 20, 1972.

[c]Geophone 2 data invalid since Jan. 3, 1974.

[d]Instrument error restricting frequency range to approximately 0.001 to 2.0 Hz with poor sensitivity.

[e]Instrument error resulting in invalid data.

Analysis of the manmade impact data has revealed a major discontinuity at a depth of between 55 and 65 kilometers in the eastern part of the Ocean of Storms. By analogy with the earth, the zone above the discontinuity is called the crust and the zone below, the mantle. Below the crust, a relatively homogeneous zone extending to a depth of approximately 1000 kilometers is suggested by the nearly constant velocity of seismic waves. Although available data are not sufficient to derive a detailed seismic velocity model for the deep interior, observations of signals originating from a large meteoroid that struck the far side of the moon and from far-side moonquakes can be explained by introducing a "core" with a radius between 600 and 800 kilometers that has markedly different elastic properties than the mantle. Current moonquake activity is concentrated near the boundary between these two zones.

Moonquakes have been detected by the low-frequency seismometers of each station at average rates of between 600 and 3000 per year, depending on the station; all the moonquakes are quite small by terrestrial standards (Richter magnitude 2 or less). Thousands of even smaller moonquakes are detected by the high-frequency seismometers. Meteoroid impacts are detected by the low-frequency seismometers at average rates of between 70 and 150 per year. Although less numerous than moonquakes, meteorid impacts generate the largest signals detected.

Lack of shallow seismic activity indicates that the moon is neither expanding nor contracting appreciably at the present time. Thus, the rate of heat flow out of the moon must be approximately equal to the rate of internal heat production. The presence of a thick lunar crust suggests early, intense heating of the outer shell of the moon.

### 3.2.10 Active Seismic Experiment

Active seismic experiment operations were conducted on the moon during the Apollo 14 and 16 missions. The purpose of the experiment was to generate and monitor seismic waves near the lunar surface. The data are being used to study the internal structure of the moon to a depth of approximately 460 meters. A secondary objective still in progress is to monitor high-frequency seismic activity during periodic listening modes.

The active seismic experiment equipment consisted of a thumper device that contained small explosive initiators, a mortar package that contained high-explosive grenades, geophones, electronics within the Apollo lunar surface experiments package central station, and interconnecting cabling. Crewmen operated the thumpers during lunar surface activities. The mortars were designed to be fired by remote command after crew departure.

The Apollo 14 geophones were deployed as planned, and the thumper part of the experiment was completed. The thumper produced excellent seismic data although the crewman was able to fire only 13 of the 21 charges. Postflight investigation showed that a malfunction occurred because lunar soil got into the arm/fire switch mechanism and the initiator selector switch was not properly seated in the detents. For Apollo 16, the thumper was successfully modified to improve switch dust seals and to increase the torque required to move the selector switch from one detent to the next.

The Apollo 14 mortar package was deployed too close to the central station and in a position where debris would be directed toward the central station if grenades were launched. The off-nominal deployment was necessitated because of a crater at the optimum mortar package deployment location. Postflight tests showed that the central station would probably be damaged if the grenades were launched. Therefore, the Apollo 14 station grenades have not been launched.

Three grenades were launched from the Apollo 16 mortar package, but the mortar pitch sensor reading varied after the first two firings and became inoperative after the third. Since the scientific objectives of the experiment had been met, the planned fourth firing was deleted.

Analysis of the seismic signals generated by the thumper during Apollo 14 has revealed important information concerning the near-surface structure of the moon. Two compressional wave seismic velocities were measured at the Fra Mauro site. The near-surface material has a seismic wave velocity of 104 meters per second. Underlying this surficial layer at a depth of 8.5 meters, the lunar material has a velocity of 299 meters per second. The measured thickness of the upper unconsolidated debris layer is in good agreement with geological estimates of the thickness of the regolith at this site.

Combining the seismic refraction results from the active seismic experiment and the lunar module ascent seismic data recorded by the Apollo 14 passive seismic experiment allows estimates of the thickness of the underlying material to be made. These estimates range from 38 to 76 meters and may indicate the thickness of the Fra Mauro Formation at this particular site (ref. 3-14).

Two compressional wave seismic velocities have been recognized so far in the Apollo 16 data. The lunar surface material has a seismic wave velocity of 114 meters per second. Underlying this surficial material at a depth of 12.2 meters, the lunar rocks have a velocity of 250 meters per second. The 114-meter-per-second velocity agrees closely with the surface velocity measured at the Apollo 12, 14, and 15 landing sites, thus indicating that no major regional differences exist in the near-surface acoustical properties of the moon.

The seismic wave velocity of the material underlying the regolith at the Apollo 16 landing site does not indicate that competent lava flows exist in the Cayley Formation at this location. Instead, this velocity suggests the presence of brecciated material or impact-derived debris of currently undetermined thickness.

### 3.2.11 Lunar Seismic Profiling Experiment

The purpose of the Apollo 17 lunar seismic profiling experiment was to record the vibrations of the lunar surface as induced by explosive charges, by the thrust of the lunar module ascent engine, and by the crash of the lunar module ascent stage. Analyses of these seismic data were planned to determine the internal characteristics of the lunar crust to a depth of several kilometers. A secondary objective of the experiment was to monitor lunar seismic activity during periodic listening intervals.

Strong seismic signals were recorded from the detonation of eight explosive charges that were armed and placed on the lunar surface by the crewmen at various points along the traverses. Recording of these seismic signals generated traveltime data to a distance of 2.7 kilometers. The seismic signals received from the lunar module ascent stage impact provided a valuable traveltime datum for determining the variation of seismic velocity with depth in approximately the upper 5 kilometers of the moon.

The most significant discovery resulting from the analysis of the data recorded by the lunar seismic profiling experiment is that the seismic velocity increases in a marked stepwise manner beneath the Apollo 17 landing site. A surface layer with a seismic velocity of 250 meters per second and a thickness of 248 meters overlies a layer with a seismic velocity of 1200 meters per second and a thickness of 927 meters, with a sharp increase to approximately 4000 meters per second at the base of the lower layer. The seismic velocities for the upper layers are compatible with those for basaltic lava flows, indicating a total thickness of approximately 1200 meters for the infilling mare basalts at Taurus-Littrow. Major episodes of deposition or evolution are implied by the observed abrupt changes in seismic velocity (ref. 3-15).

### 3.2.12 Lunar Surface Magnetometer Experiment

Magnetic field measurements have proved to be one of the most useful tools for determining the electromagnetic properties of the earth interior and solar-wind and ionospheric environments. This method was extended to the moon with the emplacement of a three-axis fluxgate magnetometer on the lunar surface during the Apollo 12 lunar stay. Similar magnetometers were deployed and activated during the Apollo 15 and 16 lunar stays.

The instrument has a sensor located at the end of each of three orthogonal booms. Three vector field components are measured in the normal mode of operation; however, the sensors may be rotated such that they simultaneously align parallel in each of the three boom axes. This alignment permits the calculation of the vector gradient in the plane of the sensor and permits an independent measurement of the magnetic field vector at each sensor position. The sensors and booms are located on a central structure which houses the central electronics and gimbal-flip unit. An evaluation of the performance of the Apollo 12 instrument resulted in the following changes to the Apollo 15 and 16 instruments.

a. The measurement range was changed from ±100, ±200, and ±400 gammas to ±50, ±100, and ±200 gammas.

b. A curtain was added over the electronics box to improve thermal control.

Intrinsic steady (remanent) magnetic fields provide a record of the magnetic field environment that existed 3 to 4 billion years ago when the lunar crustal material cooled below the Curie temperature. The Apollo 12 lunar surface magnetometer detected a remanent magnetic field of approximately 38 gammas superimposed on the geomagnetic tail, transition region, and interplanetary fields through which the moon passes during each orbit around the earth (ref. 3-16). The remanent magnetic field at the Apollo 15 site was calculated to be approximately 6 gammas (small compared to the fields at the Apollo 12, 14, and 16 sites). Since the Apollo 15 site lies near the edge of the Mare Imbrium mascon basin, the existence of little or no remanent field at that site suggests that mascons are not highly magnetic (ref. 3-17).

The bulk relative magnetic permeability of the moon has been calculated from measurements obtained in the geomagnetic-tail region to be $\mu/\mu_0 = 1.03 \pm 0.13$. Electrical-conductivity and temperature profiles of the lunar interior have been determined from solar wind magnetic field step-transient event measurements. The data presented in the following table fit the three-layer model of the moon shown in figure 3-22 (ref. 3-18). Temperature calculations are based on conductivity as a function of temperature for pure olivine.

| Region | Electrical conductivity, mho/m | Temperature, °K |
|---|---|---|
| 1 | $<10^{-9}$ | <440 |
| 2 | $\sim 3.5 \times 10^{-4}$ | 890 |
| 3 | $\sim 10^{-2}$ | 1240 |

Qualitatively, the inductive eddy-current response at the Apollo 15 site is similar to that at the Apollo 12 site. Observations show that the solar wind compresses the steady remanent field at the Apollo 12 site during periods of high solar plasma density (ref. 3-17).

On June 14, 1974, the Apollo 12 and Apollo 15 instruments were permanently commanded off. The Apollo 12 instrument science and engineering data had been invalid for 1 year and that of the Apollo 15 instrument for 6 months. Because of decreasing output from the radioisotope thermoelectric generators and the criticality of reserve power during lunar night, spurious functional changes could have caused the loss of functional instruments. The Apollo 16 instrument was operative at the time of publication of this report.

### 3.2.13 Lunar Portable Magnetometer Experiment

Portable magnetometers were used by the Apollo 14 and 16 crews. The objective of the lunar portable magnetometer measurements was to determine the remanent magnetic field at various lunar surface locations. The magnetometer actually measured low-frequency (less than 0.05 hertz) components of the total magnetic field at the surface, which includes the remanent field, the external solar field, fields induced in the lunar interior by changing solar fields, and fields caused by solar wind interactions with the lunar remanent fields. Simultaneous measurements made by the lunar surface magnetometer of the time-varying components of the field were later subtracted to give the desired resultant remanent field values caused by magnetized crustal material.

The lunar portable magnetometer consisted of a set of three orthogonal fluxgate sensors mounted on top of a tripod. The sensor-tripod assembly was connected by a ribbon cable to an electronics box. On Apollo 14, the electronics box was mounted on the modular equipment transporter; on Apollo 16, the box was mounted on the lunar roving vehicle. After positioning the tripod at the desired location, a crewman turned the power switch on, read the digital displays in sequence, and verbally relayed the data back to earth.

The Apollo 14 instrument recorded steady magnetic fields of 103 ±5 gammas and 43 ±6 gammas at two sites separated by 1120 meters. These measurements showed that the unexpectedly high (38 gamma) steady field measured at the Apollo 12 site 180 kilometers away was not unique. Indeed, these measurements and studies of lunar samples and lunar-orbiting Explorer 35 data indicate that much of the lunar surface material was magnetized at a previous time in lunar history (ref. 3-19). The magnetic field of 313 gammas measured in the North Ray Crater area during the Apollo 16 mission to the lunar highlands proved to be the highest ever measured on another body of planetary size. Other field measurements obtained by the Commander and Lunar Module Pilot at different sites along the three surface traverses varied from 121 to 313 gammas.

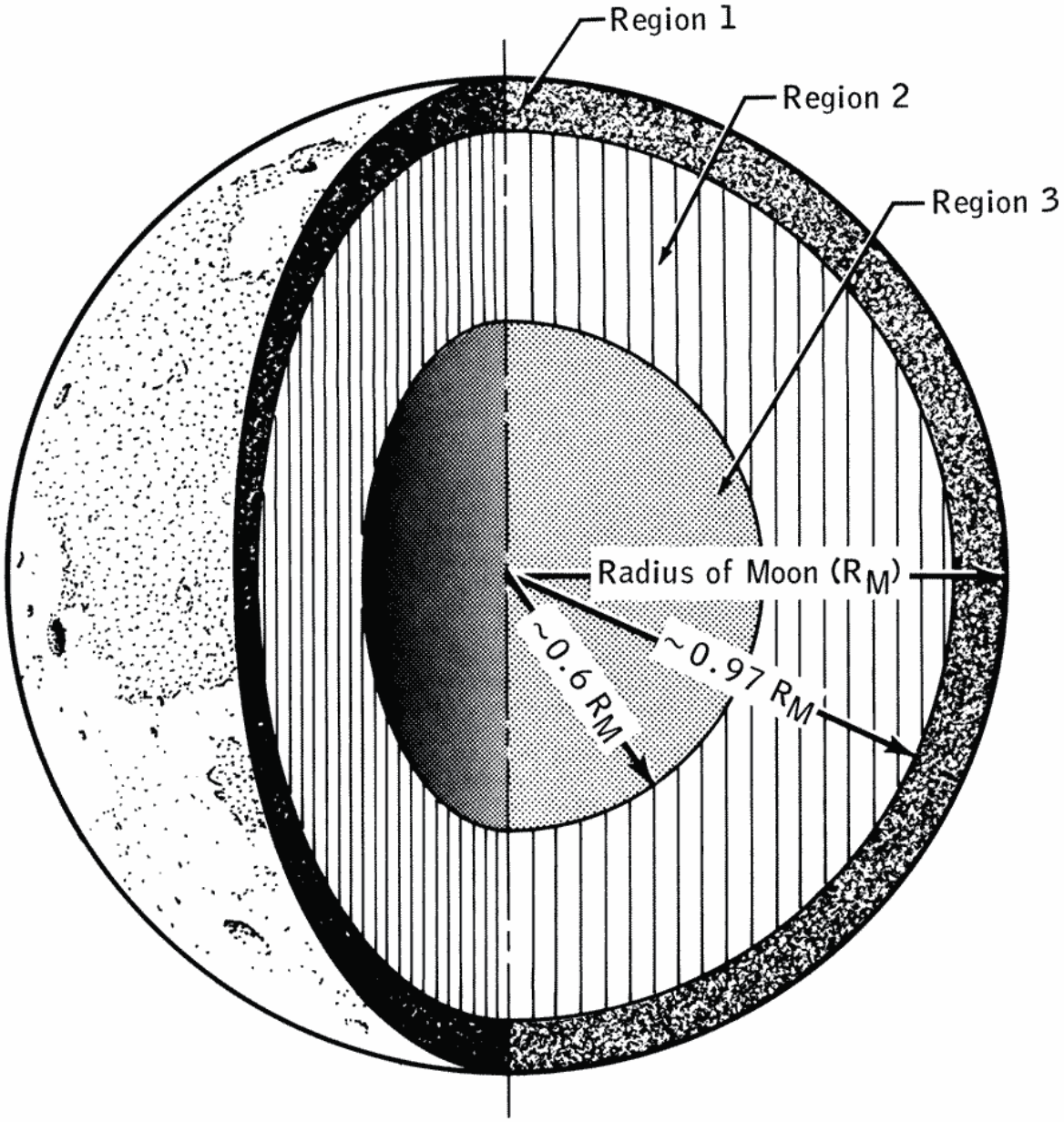


Figure 3-22.- Three-layer moon model.

Magnetic studies of returned samples indicate that they formed in a reasonably strong magnetic field (a few thousand gammas), yet there is no such field affecting the moon today. It is hypothesized that the moon had a reasonably strong magnetic field throughout much of its early history.

The surface fields provide reference values for extrapolation of subsatellite magnetometer measurements to the lunar surface. Further analysis should yield information on the geological nature and origin of lunar remanent fields, including the possibility of an ancient lunar dynamo, shock-induced magnetization, or another mechanism to account for the strong magnetization found in lunar surface samples.

### 3.2.14 Heat Flow Experiment

The purpose of the heat flow experiment is to determine the rate of heat flow from the lunar interior and the thermal properties of the lunar subsurface, thereby contributing to an understanding of the thermal history of the moon. Heat loss is directly related to the internal temperature and the rate of internal heat production; therefore, measurements of these quantities enable limits to be set on long-lived radioisotopic abundances (the chief source of interior heating) and the internal temperature.

The experiment hardware consists of two temperature-sensing probes and electronics for controlling and processing the measurements. Two holes, spaced about 9 meters apart, were drilled, and the probes were inserted into these holes. Sensitive thermometers within the probes accurately measure the vertical temperature gradient over approximately the lower 100 centimeters of each hole. These readings, over an extended period of time, yield the heat-flux data. Each probe also contains heating elements. When one of these elements is energized, a known quantity of heat is generated at a known distance from a temperature sensor. The resulting amount and rate of temperature change at the sensor are used to determine the thermal conductivity of the lunar material near the probe.

Heat flow experiments were successfully deployed and activated on the Apollo 15 and 17 missions. Deployment of a heat flow experiment was attempted during the Apollo 16 lunar stay; however, the cable connecting the electronics package with the Apollo lunar surface experiments package central station was inadvertently broken during experiment package deployment activities, rendering the heat flow experiment hardware inoperative. The only operational problem with the emplaced instruments has been the loss of one reference temperature reading on the Apollo 15 heat flow experiment. Because reference junction temperature measurements are redundant, there has been no loss of data. No specific failure mechanism was revealed during investigation of the circuits; therefore, no design changes were made on the Apollo 17 instrument.

The Apollo 15 and 17 measurements were made in similar regional settings, that is, on the margins of large mascon basins. Though the possibility of regional biases to these measurements remains, the evidence is strong that a major part of the lunar surface is characterized by heat flow at the upper limit of that expected from geochemical models and thermal history calculations. Results to date indicate that the average heat flow from the interior of the moon outward is approximately 3 microwatts per square centimeter, about half that of the earth (ref. 3-20).

### 3.2.15 Lunar Surface Gravimeter Experiment

The lunar surface gravimeter was designed to assist in the search for gravitational radiation from cosmic sources. A secondary objective is to measure tidal deformation of the moon.

The lunar surface gravimeter has three basic components: a gravity meter, a structural/thermal-control package, and an electronics package. The gravity meter uses the LaCoste-Romberg type of spring-mass suspension to sense changes in the vertical component of local gravity. The major fraction of the force supporting the sensor mass (beam) against the local gravitational field is provided by a zero-length spring (one in which the restoring force is directly proportional to the spring length). As shown in figure 3-23, small changes in force tend to displace the beam up or down. This imbalance was to be adjusted to the null position by repositioning the spring pivot points with micrometer screws. Incremental masses added by command to the sensor mass and the position of the coarse and fine micrometer screws, as read out by the shaft encoder logic, were to provide the gravity measurement.

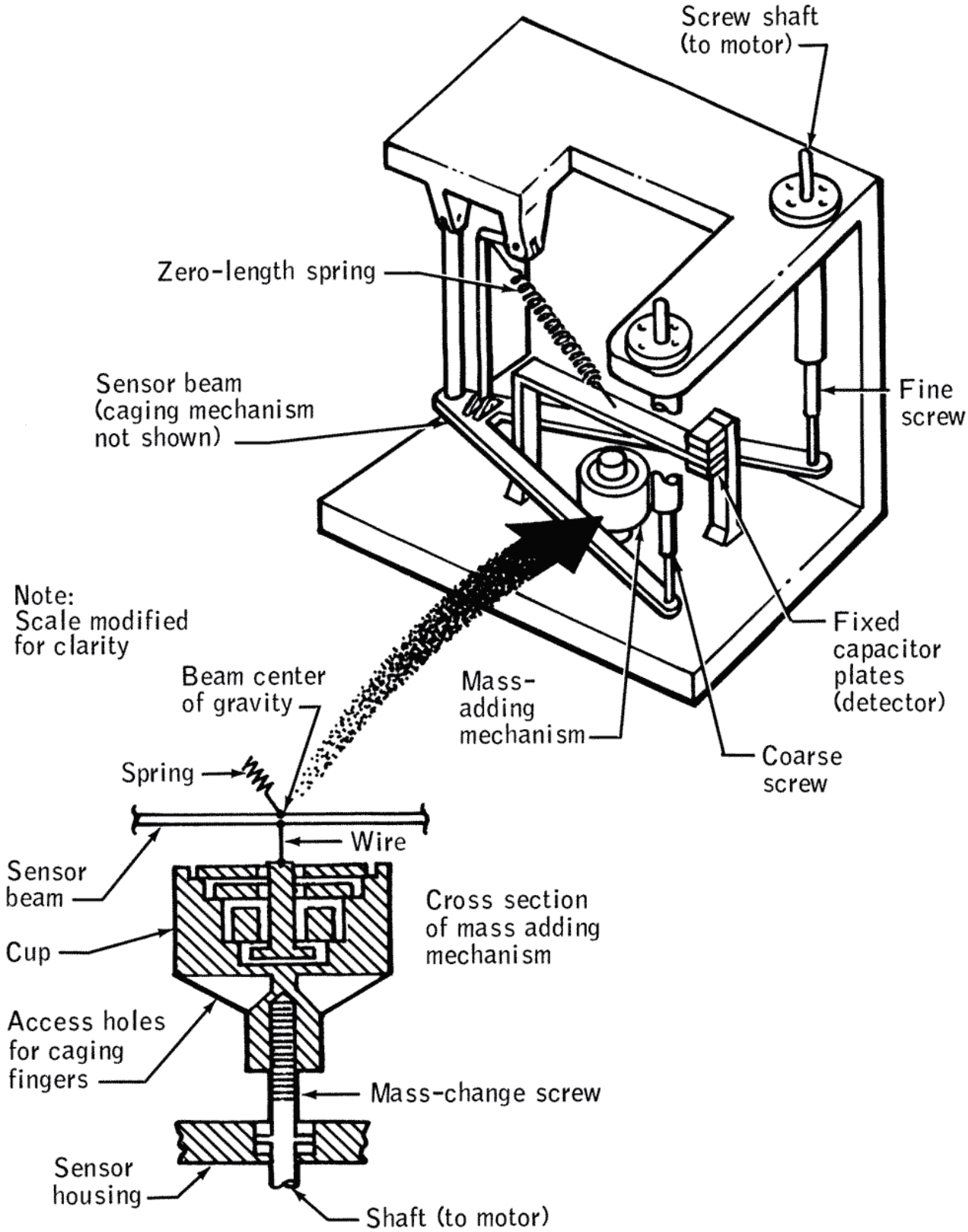


Figure 3-23.- Lunar surface gravimeter mechanism.

The instrument was deployed during the Apollo 17 lunar stay; however, following the initial experiment turn-on, the setup procedure of nulling the sensor beam in the proper stable position between capacitor plates could not be accomplished. When the command was given to add any or all of the nulling masses to the sensor beam assembly, the data indicated that the beam would not move away from the upper capacitor plate. The only way to lower the beam was to cage the beam against the lower capacitor plate. During the second and third extravehicular activities, the Lunar Module Pilot rapped the exposed top plate on the gimbal; rocked the experiment in all directions; releveled the instrument, working the base well against the surface; and verified the sunshade tilt. These actions were taken to free a mass assembly or a sensor beam that was suspected of being caught or binding, but no change was apparent. Review of sensor records revealed that an error in arithmetic resulted in the sensor masses being approximately 2 percent lighter than the proper nominal weight for 1/6-earth-gravity operation of the flight unit. The sensor mechanism allows a ±1.5 percent adjustment by ground command to correct mass inaccuracies.

Several reconfigurations of the instrument have been commanded. The sensor beam has been centered by applying a load on the beam through the mass support springs by partial caging of the mass weight assembly. In this configuration, the instrument is supplying some seismic data (ref. 3-21).

### 3.2.16 Traverse Gravimeter Experiment

The primary goal of the traverse gravimeter experiment was to make relative gravity measurements at a number of sites in the Apollo 17 landing area and to use these measurements to obtain information about the geological substructure. A secondary goal was to obtain the value of the gravity at the landing site relative to an accurately known value on earth. The instrument package contained a vibrating string accelerometer from which the gravity values could be determined. The preliminary gravity profile is based upon the assumption that the material underlying the valley floor consists of basalt that is 1 kilometer thick and has a positive density contrast of 0.8 grams per cubic centimeter with respect to brecciated highland material on either side. Using this model, the gravity values at the edges of the valley are 25 milligals lower than at the lunar module site, and a variation in the central part of the valley floor is within 10 milligals of the value at the lunar module site. These values will be refined based upon more elaborate models. A value of g = 162 694.6 ±5 milligals was measured at the lunar module site (ref. 3-22).

### 3.2.17 Surface Electrical Properties Experiment

The surface electrical properties experiment was used to explore the subsurface material of the Apollo 17 landing site by means of electromagnetic radiation. The experiment was designed to detect electrical layering, discrete scattering bodies, and the possible presence of water. The experiment data may help others interpret many observations already made with both earth-based and lunar orbital bistatic radar. In addition, the experiment provides data needed to interpret observations made with the lunar sounder (sec. 3.3.1.5), and the results are expected to help define the stratigraphy of the Apollo 17 landing site.

The crewmen deployed a small, low-power transmitter and laid on the surface two crossed dipole antennas that were 70 meters long tip to tip. A receiver and receiving antennas were mounted on the lunar roving vehicle. Inside the receiver, there was a tape recorder which recorded the data on magnetic tape. In addition to the surface electrical properties experiment data, information on the location of the lunar roving vehicle, obtained from the lunar roving vehicle navigation system, was also recorded on the tape.

The basic principle of the experiment is the interference of two or more waves to produce an interference pattern. Electromagnetic energy radiated from a transmitting antenna travels at different velocities through different media. Thus, distinctive patterns were recorded as the lunar roving vehicle moved along the surface. Values of the electrical properties of the subsurface material (dielectric constant and loss tangent) were obtained from analysis of the data.

Two quite different structural models of the Apollo 17 site have been developed to account for the observations. Although neither is based on rigorous theory, the experiment team believes that each is correct in the essential features. The first model, preferred by most members of

the team, is one in which the dielectric constant increases with depth from a value of 2.5 to 3 near the surface to approximately 5 at a depth of 50 to 60 meters. A discontinuity is present at 50 to 60 meters, where the dielectric constant increases to a value of 6 to 6.5. On the basis of a low value of the loss tangent, water is probably not present at the Apollo 17 site.

In the alternate structural model, the cause of the apparent change of dielectric constant with depth is assigned to a sloping interface between a thin upper layer and a thick lower layer. The upper layer is, perhaps, 20 meters thick beneath the experiment site and thins to 15 meters at station 2 (fig. 3-12). In addition, there is a hint of a discontinuity in the dielectric constant at a depth of approximately 300 meters.

Additional theoretical and scale model work is being done to determine which model is more nearly correct (ref. 3-23).

### 3.2.18 Lunar Neutron Probe Experiment

The lunar neutron probe experiment, one of the Apollo 17 surface experiments, was designed to measure the rates of low-energy neutron capture as a function of depth in the lunar regolith.

Various studies of the lunar samples, particularly those involving isotopic variations in gadolinium and samarium, have documented the effects of long-term exposure of lunar materials to neutrons and have shown how such data can be used to calculate regolith accumulation and mixing rates and ages for stratigraphic layers in lunar core samples. Comparison of a neutron capture product with a spallation product in lunar rocks can also be used to infer average irradiation depths that are required to obtain accurate exposure ages. In addition, the Apollo 15 orbital gamma ray experiment has detected gamma rays from neutron capture on such elements as iron and titanium, from which the relative chemical abundances of these elements could be inferred. In all these cases, the strength of the conclusions has been necessarily limited by the lack of experimental values for the relevant rates of neutron capture. The neutron probe experiment was proposed to obtain these data.

The experiment used two particle track detection systems. A cellulose triacetate plastic detector was used in conjunction with boron-10 targets to record the alpha particles emitted with the neutron capture on boron-10. For the second system, mica detectors were used to detect the fission fragments from neutron-induced fission in uranium-235 targets.

The lunar neutron probe experiment was assembled, activated, and deployed in the hole formed by the drilling and extraction of the deep-core sample. The probe was deployed during the first extravehicular activity and retrieved at the end of the third extravehicular activity for a total activated exposure period of 49 hours.

When the probe was disassembled, the targets and detectors were all in excellent condition, and indicators show that the probe temperature never exceeded 335° K. The possibility that the probe would reach higher temperatures was a serious concern before the mission, because thermal annealing of the particle tracks in the plastic could occur.

Although only the mica detectors had been analyzed at the time of publication of reference 3-24, it appears that good agreement exists between the results of the experiment and theoretical calculations of neutron capture rates and the equilibrium neutron energy spectrum. If this agreement is confirmed, interpretations of lunar sample data to determine regolith mixing rates and depths, depths of irradiation for lunar rocks, and accumulation rates and deposition times can be verified.

### 3.2.19 Laser Ranging Retroreflector

Arrays of optical reflectors were emplaced on the lunar surface during the Apollo 11, 14, and 15 missions. Each of the arrays consisted of a compact assembly of solid fused silica corner reflectors, 3.8 centimeters in diameter, mounted in an aluminum panel. Fused silica was used because of its known radiation resistance, thermal stability, high transparency to most wavelengths in solar radiation, long life, and operation in lunar day and lunar night. Each reflector was recessed 1.9 centimeters in the panel mounting socket to minimize temperature gradients.

Accurately timed pulses of light from a ruby laser at a ground station observatory are directed through a telescope aimed at one of the reflector packages. The light is reflected back on a path parallel to the incident beam, collected by the telescope, and detected by special receiving equipment. The time required for a pulse of light to reach the reflector and be returned is used to establish the distance from the earth ground station to the reflector site on the lunar surface at that time. Even though the illuminated spot on the moon (the reflector) is small, the fact that each corner reflector sends the light back in almost the same direction it came from causes the return signal at the earth from the reflector panel to be 10 to 100 times larger than the reflected intensity from the lunar surface.

The overall design for the Apollo 14 and 15 reflector arrays was similar to that for Apollo 11 except the half-angle taper of the reflector cavities was increased so as to increase the array optical efficiency 20 to 30 percent for off-axis earth positions. The number of reflectors in the array was increased from 100 for Apollo 11 and 14 to 300 for Apollo 15 to permit regular observations with simpler ground equipment, especially for groups mainly interested in obtaining geophysical information from observing only one reflector. The increase also allowed the use of a number of permanent stations on different continents for the determination of polar motion and earth rotation with high accuracy, as well as the use of movable lunar ranging stations to monitor movements of a large number of points on the earth's surface.

Ground stations obtaining successful measurements from the Apollo arrays include the McDonald Observatory in Texas, Air Force Cambridge Research Laboratory's Lunar Ranging Observatory in Arizona, Lick Observatory, Pic du Midi Observatory in France, Tokyo Astronomical Observatory in Japan, Crimean Astrophysical Observatory in the Soviet Union, and the Smithsonian Astrophysical Observatory.

The three Apollo reflector sites form an almost equilateral triangle with sides 1250, 1100, and 970 kilometers, and are almost centered on the near side of the moon. The complex angular motions of the moon about its center of mass thus can be separated with high accuracy from the range changes due to center-of-mass motion by differential range measurements to different reflector locations.

The accuracy already achieved in lunar laser ranging represents a hundredfold improvement over any previously available knowledge of the distance to points on the lunar surface. Extremely complex structure has been observed in the lunar rotation, and significant improvement has been achieved in the lunar orbit. The selenocentric coordinates of the retroreflectors give improved reference points for use in lunar mapping, and new information on the lunar mass distribution has been obtained.

Full use of the Apollo arrays will require an observing program continuing many years and using ground stations around the world. No evidence of degredation with time in the return signals from any of the Apollo reflectors has been observed so far, and thus an operational lifetime of at least 10 years may be expected for these passive retroflector arrays.

Further information is contained in reference 3-25.

### 3.2.20 Charged-Particle Lunar Environment Experiment

The charged-particle lunar environment experiment was deployed at Fra Mauro as part of the Apollo 14 experiments package system. The instrument was designed to measure the fluxes of electrons and protons with energies ranging from 40 to 70 000 electron volts and their angular distribution and time variations.

The basic instrument of the experiment consists of two detector packages (analyzers A and B) oriented in different directions for minimum exposure to the ecliptic path of the sun. Each detector package has six particle detectors; five provide information about particle energy distribution, and the sixth provides high sensitivity at low particle fluxes. Particles entering the detector package are deflected by an electrical field into one of the six detectors, depending on the energy and polarity of the particles.

On April 8, 1971, the analyzer B detector voltage failed. Subsequent playback of the data from various remote sites revealed that the anomalous condition occurred abruptly. As a result, analyzer B is not providing any scientific data. The analyzer A detector voltage decreased significantly on June 6, 1971. The charged-particle lunar environment experiment continued to operate until June 16, 1971, when, after another significant analyzer A voltage decrease, the experiment was commanded to the standby mode. Since then, the instrument has been operated under a revised procedure to avoid further degradation.

The data have application to investigations of various particle phenomena, including solar wind, the magnetosphere, and low-energy solar cosmic rays. Preliminary data analyses have shown the presence of a lunar photoelectron layer; an indication of modulation or acceleration of low-energy electrons near the moon; penetration of auroral particles to lunar distances in the magnetospheric tail; and electron fluxes in the magnetospheric tail, possibly associated with the neutral sheet (ref. 3-26).

### 3.2.21 Solar Wind Spectrometer Experiment

Two solar wind spectrometers were deployed and activated on the lunar surface - one during the Apollo 12 mission and the other during the Apollo 15 mission. The two instruments, separated by approximately 1100 kilometers, provided the first opportunity to measure the properties of the solar plasma simultaneously at two locations a fixed distance apart. The instruments were designed to measure the velocity, density, and angular distribution of the solar wind plasma striking the lunar surface. Thus, the interaction of the solar wind with the moon may be studied and inferences made about the physical properties of the moon, the nature of the magnetospheric tail of the earth, and general solar wind properties.

To be sensitive to solar wind plasma from any direction (above the horizon of the moon) and to ascertain its angular distribution, the solar wind spectrometer has an array of seven Faraday cups. Because the cups are identical, an isotropic flux of particles produces equal currents in each cup. For a flux that is not isotropic, analysis of the relative amounts of current in the seven collectors determines the mean direction of plasma flow and is a measure of the anisotropy.

Indications of anomalous behavior of the Apollo 12 instrument were traced to August 1971 after initial discovery in November 1971. Subsequent investigation revealed that the anomaly has occurred intermittently since June 13, 1971. The periods of abnormality always occur when the sun is between 120° and 135° from the dawn horizon, and their duration increases steadily month after month. The effect of this anomaly is simply to restrict the range of energy over which positive ions can be detected, reducing the upper limit by a factor of 2. The instrument was designed to go as high as 9600 electron volts per unit charge to accommodate the helium component of the solar wind at the highest velocities that had ever been observed. In the high-gain mode, detectable currents of hydrogen ions are never found in the two highest energy levels, and helium ions are detectable in these levels only rarely. Thus, the absence of these two levels in the high-gain mode does not seriously compromise the validity and usefulness of the data. In the low-gain mode, hydrogen ion energies still do not extend into these levels, but data on helium ions will be lost more frequently. Thus, the occurrence of this anomalous performance necessitates operation of the solar wind spectrometer in the high-gain mode if possible.

The Apollo 15 solar wind spectrometer telemetry data became invalid coincident with a central station reserve power decrease of approximately 7 watts on June 30, 1972. The power decrease indicated that the experiment which is current limited was drawing approximately 13 watts of power. During real-time support periods, the experiment was cycled from the standby mode to the operate mode, and verification that the instrument was demanding excess power from the central station was obtained. The instrument was permanently commanded off June 14, 1974.

Preliminary results from the data analyzed include indications that the solar plasma at the lunar surface is superficially indistinguishable from that at a distance from the moon, both when the moon is ahead of and behind the bow shock of the earth. No detectable plasma appears to exist in the magnetospheric tail of the earth or in the shadow of the moon (ref. 3-27).

### 3.2.22 Solar Wind Composition Experiment

The purpose of the solar wind composition experiment is to determine the elemental and isotopic composition of the noble gases and other selected elements in the solar wind by measurement of particle entrapment on exposed sheets of foil.

The average isotopic compositions of the solar wind are of significant importance because comparisons can be made with ancient compositions derived from solar wind gases trapped in lunar soil and rocks. Because solar activity varies with time, the isotopic abundances in the solar wind are expected to vary also. Therefore, to obtain accurate average abundances which exist during this age of the solar system, this experiment was performed numerous times, separated in time and with extended foil exposure times.

The experiment was deployed on five missions (Apollo 11, 12, 14, 15, and 16). On each mission, the experiment consisted of an aluminum foil sheet on a reel and a staff to which the foil and reel were attached. The apollo 16 experiment differed from those of the previous missions in that pieces of platinum foil were attached to the aluminum foil. This change was made to determine whether or not the platinum foil pieces could be cleaned with fluoridic acid to remove lunar dust contamination without destroying rare gas isotopes of solar wind origin up to the mass of krypton. The foil was positioned by a crewman perpendicular to the solar rays, left exposed to the solar wind, retrieved, and brought back to earth for analysis. Exposure times for each deployment were as follows.

| Mission | Exposure time, hr:min |
|---|---|
| Apollo 11 | 01:17 |
| Apollo 12 | 18:42 |
| Apollo 14 | 21:00 |
| Apollo 15 | 41:08 |
| Apollo 16 | 45:05 |

The relative elemental and isotopic abundances of helium and neon measured for the Apollo 12, 14, 15, and 16 exposure times are quite similar but differ from those obtained during the Apollo 11 mission. Particularly noteworthy is the absence of any indication of electromagnetic separation effects that might have been expected at the Apollo 16 landing site because of the relatively strong local magnetic field. Weighted averages of ion abundances in the solar wind for the five foil exposure periods are given in table 3-V. The errors cited are an estimate of the uncertainty of the averages for the indicated period. The errors are based on the variability of the observed abundances obtained from the four long exposure times (ref. 3-28).

### 3.2.23 Suprathermal Ion Detector and Cold-Cathode Gage Experiments

The suprathermal ion detector and cold-cathode gage experiments are conveniently discussed together because the data processing system is common to both experiments and because the electronics for the cold-cathode gage are contained in the suprathermal ion detector package. These two experiments were part of the Apollo 12, 14, and 15 lunar surface experiments packages.

The suprathermal ion detector experiments measure the energy and mass spectra of positive ions near the lunar surface. A low-energy detector counts ions in the velocity range from $4 \times 10^4$ to $9.35 \times 10^6$ centimeters per second with energies from 0.2 to 48.6 electron volts, enabling the determination of the distribution of ion masses as large as 120 atomic mass units. A higher-energy detector counts ions in selected energy intervals between 1 and 3500 electron volts. The ions generated on the moon are of interest because possible sources are sporadic outgassing from volcanic or seismic activity, gases from a residual primordial atmosphere of heavy gases, and evaporation of solar wind gases accreted on the lunar surface. Ions that arrive from sources beyond the near-moon environment are also being studied. For example, the motions of ions in the magnetosphere can be investigated during those periods when the moon passes through the magnetospheric tail of the earth.

TABLE 3-V.- COMPARISON OF WEIGHTED AVERAGES OF SOLAR WIND ION ABUNDANCES[a]

| [b]Sources | $He^4/He^3$ | $He^4/Ne^{20}$ | $Ne^{20}/Ne^{22}$ | $Ne^{22}/Ne^{21}$ | $Ne^{20}/Ar^{36}$ |
|---|---|---|---|---|---|
| Solar wind (average from solar wind composition experiments) | 2350 ±120 | 570 ±70 | 13.7 ±0.3 | 30 ±4 | 28 ±9 |
| Lunar fines 10084 | 2550 ±250 | 96 ±18 | 12.65 ±0.2 | 31.0 ±1.2 | 7 ±2 |
| Ilmenite from 10084 | 2720 ±100 | 218 ±8 | 12.85 ±0.1 | 31.1 ±0.8 | 27 ±4 |
| Ilmenite from 12001 | 2700 ±80 | 253 ±10 | 12.9 ±0.1 | 32.0 ±0.4 | 27 ±5 |
| Ilmenite from breccia 10046 | 3060 ±150 | 231 ±13 | 12.65 ±0.15 | 31.4 ±0.4 | (c) |
| Terrestrial atmosphere | $7 \times 10^5$ | 0.3 | 9.80 ±0.08 | 34.5 ±1.0 | 0.5 |

[a]Obtained from the solar wind composition experiments with abundances in surface-correlated gases of lunar fines and a breccia, and in the earth's atmosphere.

[b]Data for surface-correlated gases in lunar materials are from references 3-29 and 3-30.

[c]Variable.

The cold-cathode gages measure the density of neutral atoms comprising the ambient lunar atmosphere. The range of the instruments corresponds to atmospheric pressures of $10^{-12}$ to $10^{-6}$ torr. Neutral atoms entering the sensor become ionized and result in a minute current flow that is proportional to the atmospheric density. These instruments were included in the experiments packages to evaluate the amount of gas present on the lunar surface. The gage indications can be expressed as a concentration of particles per unit volume or as pressure, which depends on the ambient temperature in addition to the concentration. The amount of gas observed can be compared with the expectation associated with the solar wind source to obtain an indication of the presence of other gas sources.

The Apollo 12 suprathermal ion detector and cold-cathode gage were commanded on after experiments package deployment and functioned satisfactorily for approximately 14 hours. At that time, the 3500-volt power supply for the suprathermal ion detector and the 4500-volt power supply for the cold-cathode gage were turned off automatically. Analysis indicates that arcing resulted from the outgassing of the electronics potting material and that the arcing protection provisions turned off the power supplies.

The 4500-volt power supply was immediately commanded on several times unsuccessfully. All attempts to command the 4500-volt power supply on have been unsuccessful because of damage incurred by the arcing. After a waiting period for gases to dissipate, the 3500-volt power supply was commanded on successfully, and the Apollo 12 suprathermal ion detector has been able to function since that time.

The Apollo 14 and 15 suprathermal ion detectors have experienced numerous arcing anomalies since lunar deployment and initial activation; however, these instruments continue to function. The Apollo 14 experiment also has experienced an anomaly in the positive analog-to-digital converter, causing a loss of all engineering data processed through that converter. This anomaly has had no adverse effect on the scientific outputs of the experiments.

The suprathermal ion detectors have detected numerous single-site ion events. Multiple-site observations of ion events that possibly correlate with seismic events of an impact character (recorded at the seismic stations) have resulted in information about the apparent motions of the ion clouds. The 500- to 1000-electron-volt ions streaming down the magnetosheath have also been observed simultaneously by all three instruments (ref. 3-31).

On March 7, 1971, the Apollo 14 suprathermal ion detector recorded 14 hours of data that appears to be primarily a result of clouds of water vapor. Studies of all possible sources of such an event leads to the conclusion that the water is of lunar origin (ref. 3-32). In view of the almost total lack of water in returned samples, this is an unexpected result.

Before the Apollo program, optical and radio observations had been used to set lower limits on the density of the lunar atmosphere; apart from that, nothing was known. The Apollo program has demonstrated that the contemporary moon has a tenuous atmosphere although by earth standards the lunar atmosphere is a hard vacuum. The cold-cathode gage experiment measured the concentrations of neutral atoms at the lunar surface to be approximately $2 \times 10^5$ atoms per cubic centimeter. This measurement corresponds to a pressure between $10^{-12}$ and $10^{-11}$ torr (a vacuum not achievable in earth laboratories).

### 3.2.24 Cosmic Ray Detector Experiment

The relative abundances and energy spectra of heavy solar and cosmic ray particles convey much information about the sun and other galactic particle sources and about the acceleration and propagation of the particles. In particular, the lowest energy range, from a few million electron volts per nuclear mass unit (nucleon) to 1000 electron volts per nucleon (a solar wind energy), is largely unexplored. The cosmic ray experiment contained various detectors designed to examine this energy range.

The experiment was carried on the Apollo 16 and 17 missions and was the outgrowth of earlier cosmic ray experiments on the Apollo 8 and 12 missions. The early experiments consisted basically of a detector affixed to crewmen's helmets to assess the amount of cosmic ray radiation to which the crewmen were subjected in space. The purposes of and the hardware for the Apollo 16 and 17 experiments were considerably more exotic and complex.

The detection basis of nearly all the cosmic ray experiments is that particles passing through solids can form trails of damage, revealable by preferential chemical attack, which allows the particles to be counted and identified. The Apollo 16 detector hardware consisted of a foldable four-panel array (fig. 3-24). The panels were mounted on the outside of the lunar module descent stage so as to directly expose three panels to cosmic ray and solar wind particles after the spacecraft/lunar module adapter had been jettisoned. During the first extravehicular activity on the lunar surface, a crewman pulled a lanyard to expose the hidden surfaces of panel 4 to the lunar surface cosmic rays and the solar wind. Exposure ended just before the termination of the third extravehicular activity, at which time the four-panel array was pulled out of its frame and folded into a compact package for return to earth. Because the folding and stowing of the device ended the period of useful exposure of the detectors, provision was made to distinguish particles detected during the useful period from particles that subsequently penetrated the spacecraft and entered the detectors.

The full planned exposure of the four panels was not obtained on Apollo 16 because the scheduled sequence of events did not occur completely as planned.

a. Panel 4 contained a shifting mechanism that activated several experiments, most notably the neutron experiment, on the lunar surface. Because of a mistake in the final assembly, the shifting was only partially successful. This circumstance caused degradation of the information that can be obtained from the neutron experiment and made it difficult to obtain information on the time variation of light solar wind nuclei.

b. A temperature rise in the package exceeded design specifications. Although this temperature rise has rendered the anlaysis of the experiment difficult, the effects of the temperature rise can be taken into account.

c. At some time during the mission, panel 1 became covered with a thin, dull film that seriously degraded the performance of panel 1.

d. During the translunar phase of the mission on April 18, 1972, a medium-sized solar flare occurred. Detectors exposed to the solar flare showed that the flare contained approximately $10^8$ protons per square centimeter with energies greater than 5 million electron volts.

The Apollo 17 hardware (fig. 3-25) consisted of a thin aluminum box with a sliding removable cover. Four particle-detector sheets were attached to the interior wall of the box, and three were attached to the inside surface of the cover. Opening was accomplished by two opposing rings, one mounted on the cover and the second mounted on the box. During the first extravehicular activity, a crewman removed the experiment from the lunar module and pulled the cover portion off the box. The cover was hung on the lunar module structure in the shade, with the detector surfaces oriented away from the sun and facing the dark sky. The open box was then hung by a Velcro strap on a lunar module strut in the sun, with the detector surfaces perpendicular to the sun. The detectors were exposed to the lunar environment for 45-1/2 hours. The experiment was retrieved at the beginning of the third extravehicular activity, earlier than planned, because of an apparent increase in the flux of low-energy particles caused by a visually active sunspot that was present during the entire mission.

Three teams of investigators are using data from the cosmic ray detector experiment. The preliminary findings from the Apollo 16 data are given in reference 3-33. Included are the observations that the differential energy spectrum of nuclei with $Z > 6$ falls by seven orders of magnitude over the interval from 0.1 to 20 million electron volts per nucleon, then remains almost flat up to approximately 100 million electron volts per nucleon. The two parts correspond to contributions from the sun and from galactic cosmic rays.

### 3.2.25 Lunar Ejecta and Meteorites Experiment

This experiment, emplaced on the lunar surface during the Apollo 17 mission, measures impacts of primary cosmic dust particles ($10^{-9}$ grams or less) and lunar ejecta emanating from the sites of meteorite impacts on the moon. Specific objectives are to (1) determine the background and long-term variations in cosmic dust influx rates, (2) determine the extent and nature of lunar ejecta produced by meteorite impacts on the lunar surface, and (3) determine the relative contributions of comets and asteroids to earth meteoroids.

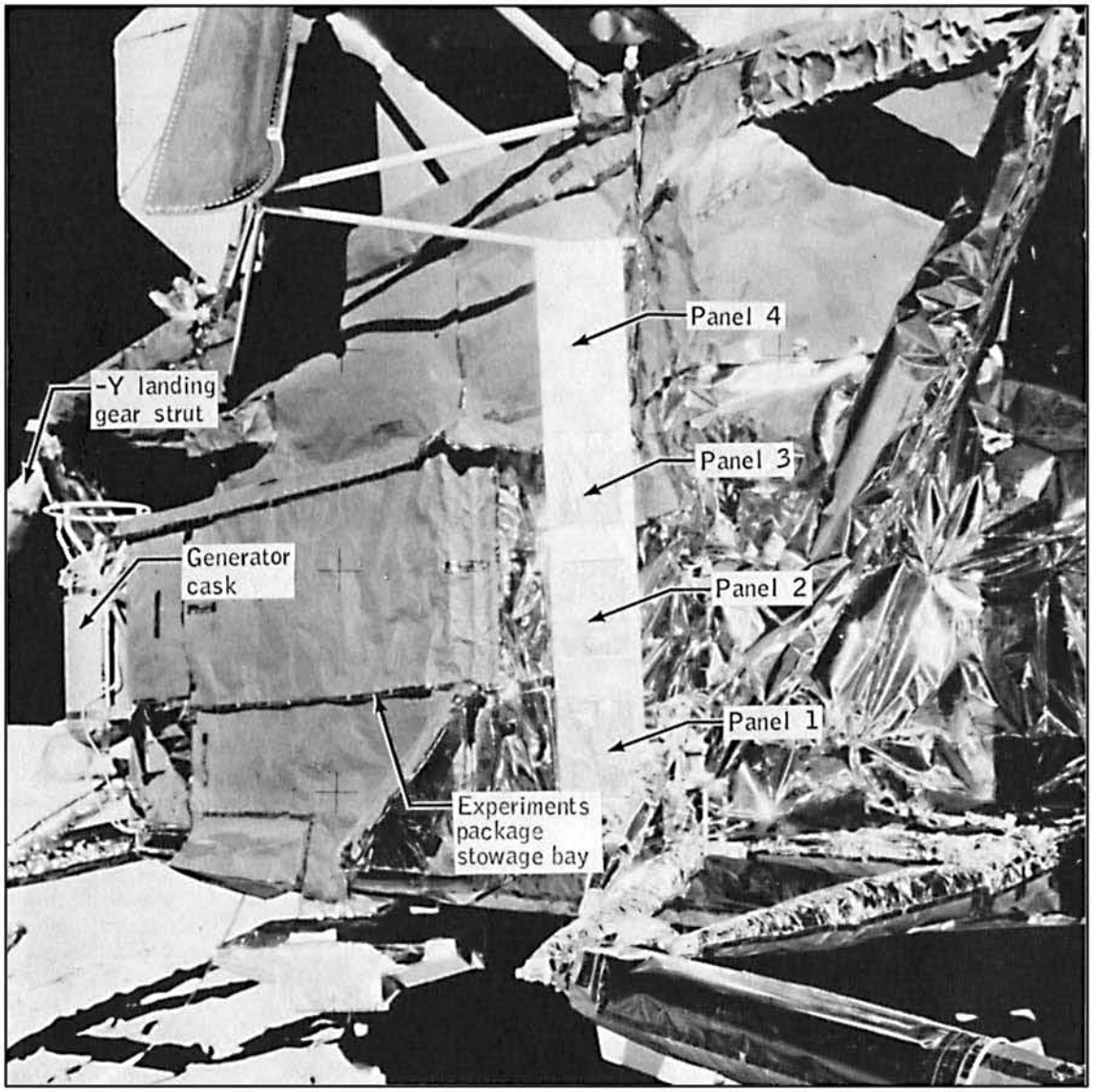


Figure 3-24.- Cosmic ray detector experiment.

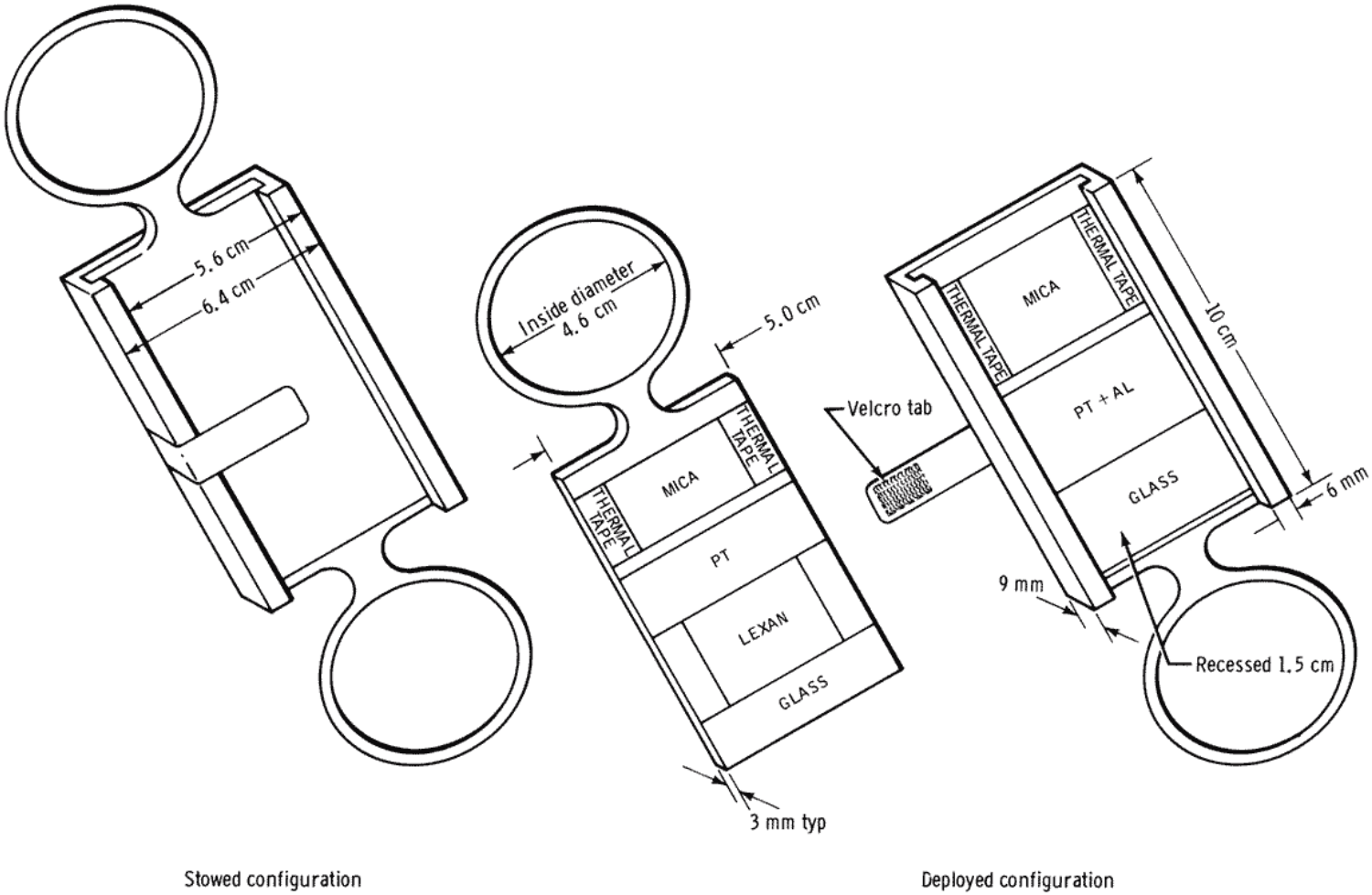


Figure 3-25. - Apollo 17 cosmic ray detector.

The experiment consists of an array of sensors that detect micrometeorites and yeild data throughout the lifetime of the Apollo 17 lunar surface experiments package. The following particle parameters can be derived.

a. Speed (within ±5 percent): 1 to 75 kilometers per second range

b. Kinetic energy for particles having energies of 1 to 1000 ergs

c. Flight path (within ±26°)

d. Particle momentum: $2.5 \times 10^{-5}$ to $7 \times 10^{-4}$ dyne-seconds

e. Mass and diameter for assumed particle densities

The thermal control provisions for the lunar ejecta and meteorites experiment do not maintain the operating temperature below the qualification test maximum level during the lunar day because the thermal conditions at the Apollo 17 site are different than those of the design site (level plain at equator). However, the current thermal profile permits experiment operation during 100 percent of each lunar night and approximately 30 percent of each lunar day. Since the experiment components are rated higher than the maximum qualification test temperature, the allowable maximum temperature of operation has been increased in small increments each lunation.

Meaningful results from the experiment can only be derived from a long-term statistical and correlative study between primary particle events and ejecta events. In view of the relatively short-term measurement of primary particles as of the time of publication of reference 3-34, no results were reported.

### 3.2.26 Lunar Atmospheric Composition Experiment

The lunar atmospheric composition experiment is a three-channel, magnetic-deflection-type mass spectrometer. The spectrometer was deployed as part of the Apollo 17 lunar surface experiments package. The purposes of the experiment are to obtain data on the composition of the lunar ambient atmosphere in the mass range of 1 to 110 atomic mass units and to detect transient changes in composition caused by the venting of gases from the lunar surface or other sources.

This experiment augments data from the lunar orbital mass spectrometer experiments conducted during the Apollo 15 and 16 missions, and the far ultraviolet spectrometer experiment of Apollo 17.

From the data obtained during the first three lunations after deployment of the lunar atmospheric composition experiment instrument, three gases - helium, neon, and argon - have been identified as being native to the lunar atmosphere. A summary of the measured concentrations of these gases compared with several predictions is presented in table 3-VI. The helium concentrations and the diurnal ratio are in excellent agreement with predictions based on the solar wind as a source, indicating that the basic tenets of the theory of a noncondensable gas are correct. However, the neon measured concentration is a factor of 20 below predictions, indicating possibly some adsorption or retention on the night side of the moon. If true, this phenomenon is unexpected because of the very low freezing temperature (27° K) of neon. The Apollo 16 lunar orbital mass spectrometer experiment did detect neon on the night side near the sunset terminator at a concentration approximately $1 \times 10^5$ molecules per cubic centimeter. This is approximately a factor of less than 2 higher than the present value and is within the experimental errors of the measurements. This discrepancy between theory and measurement for neon is a serious problem and is one of the major tasks to be considered in the future.

Argon appears to be adsorbed on the late night (coldest) part of the lunar surface as none of its isotopes are detected at this time. A significant predawn enhancement of argon-40 indicates a release of the gas from the warm approaching terminator region. The total nighttime gas density of $4.6 \times 10^5$ molecules per cubic centimeter is a factor of 2 higher than the measured values from the Apollo 14 and 15 cold cathode gage experiments. This is not surprising (notwithstanding errors in calibration of both instruments) because the mass spectrometer ion source is warmer than the cold discharge source of the gage and therefore would have a higher outgassing rate. However, the residual being measured by both instruments is clearly not entirely neon but a multitude of gases, including helium (ref. 3-36).

TABLE 3-VI.- CONCENTRATIONS OF GASES DETERMINED FROM CURRENT LUNAR MASS SPECTROMETER DATA, COLD CATHODE GAGE DATA, AND PREDICTIONS

| Gas | Mass spectrometer data, molecules/$cm^3$ | | Cold cathode gage data, molecules/$cm^3$ | | Predicted data, molecules/$cm^3$ | |
|---|---|---|---|---|---|---|
| | Day | Night | Day | Night | Day | Night |
| Hydrogen | $1 \times 10^8$ | $1 \times 10^5$ | | | [a]$3.6 \times 10^3$ | [a]$2.3 \times 10^4$ |
| Helium | $2 \times 10^3$ | $4 \times 10^4$ | | | [b]$3 \times 10^3$<br>[a]$1.7 \times 10^3$ | [a]$4.1 \times 10^4$ |
| Neon | | [c]$7 \times 10^4$ | | | [b]$5 \times 10^4$ | [b]$1.3 \times 10^6$ |
| Argon-36 | | [c]$2 \times 10^3$ | | | [b]$3 \times 10^2$ | [b]$8 \times 10^3$ |
| Argon-40 | | [c]$2 \times 10^3$ | | | | |
| [d]Total | $4 \times 10^8$ | $4.6 \times 10^5$ | $1 \times 10^7$ | $2 \times 10^5$ | | |

[a]Predicted by R. R. Hodges, Jr., in unpublished data.

[b]Reference 3-35.

[c]Upper limit; argon freezes out at night.

[d]Total gas concentrations from mass spectrometer during second lunar day and third lunar night after deployment; from cold cathode gage after 10 lunations.

The multiplier high voltage power supply of the instrument apparently failed on October 17, 1973, resulting in the loss of science data. Periodic checks are being made to assess the performance of the instrument, but no significant improvement has been obtained since that date.

### 3.2.27 Lunar Dust Detector

Dust detectors were included with the Apollo 11, 12, 14, and 15 experiment complements. The detectors were mounted on the Apollo lunar surface experiments package sunshields. The Apollo 11, 14, and 15 detectors were designed to obtain data for assessing dust accretion, lunar radiation, and lunar surface brightness temperature. The Apollo 12 detector was designed only for assessing dust accretion and measuring thermal surface degradation.

All dust detectors have shown no measurable dust degradation effects caused by lunar module lift-off debris. A cell degradation rate of from 3 to 4 percent per year has been measured for the solar cells having 0.006-inch protective glass covers and about 7 to 8 percent per year for unprotected cells. These degradation rates are very close to the expected cell damage during a year due to the high energy cosmic and solar radiation received at the lunar surface. Most of the degradation of the cells can therefore be attributed to radiation since a dust accretion process would cause both bare and cover-glass-protected cells to decay at the same rates.

Yearly cyclic variations in the cell temperature of as much as 6° K have been measured. These variations are due to the difference in distance from the sun during the lunar "winter" aphelion (July) and lunar "summer" perihelion (December). Similarly, the cell output voltages show a yearly cyclic variation of approximately 8 percent because of the difference in received solar radiation through the year.

### 3.2.28 Surveyor III Analysis

Several pieces of hardware were removed from the Surveyor III spacecraft by the Apollo 12 astronauts and returned to earth for analysis. The Surveyor III spacecraft had landed on the lunar surface in the Ocean of Storms 2 1/2 years earlier and had been exposed to the lunar particle environment during that time.

Traces of induced radioactivity and meteoroid impact craters ranging from 0.025 to 0.25 millimeter in diameter were found in the recovered Surveyor hardware. Crater sizes and the indicated flux were compatible with predicted values.

An unexpected discovery in the study of solar flare particles occurred when the relative abundances of very heavy nuclei were determined from a sample of Surveyor III glass. The discovery (now confirmed by independent satellite measurements) was that the lowest energy solar cosmic rays are highly enriched in very heavy nuclei compared to normal solar material. This discovery is the first demonstration of the preferential heavy-ion acceleration by a natural particle accelerator. This discovery also casts an entirely new light on two decades of solar and cosmic ray research during which a basic assumption has been the absence of such preferential acceleration processes.

### 3.2.29 Particle Implantation Studies

The flux of particle fields and solar radiation and of meteorites on the lunar surface has left evidence of the history of the solar system implanted on the surface materials.

a. Solar wind particles: Although the solar wind has been studied for years using unmanned satellites, the Apollo program has contributed the following important new information.

1. From solar wind ions captured in aluminum foils and subsequently analyzed in the laboratory (sec. 3.2.22), isotopic information on heavy rare gases has been obtained for the first time. This information is fundamental to the understanding of the evolution of the earth atmosphere.

2. Lunar samples give a wealth of information about directly implanted atoms originating from the sun. This information is basic to an understanding of the sun and all other solar system objects. The elements krypton and xenon show isotopic differences, still unexplained, between the earth atmosphere and meteorites. Therefore, studies of surface implanted ions of krypton and xenon have been particularly important. Deuterium has been shown to have a very low abundance with respect to hydrogen abundance.

3. The abundance of argon-40 is greatly in excess of what was expected; the most likely interpretation is that the argon-40 was originally emitted by the moon and was then reimplanted by interaction with the solar wind.

4. Amorphous surface films, very likely produced by solar wind bombardment, are observed on many lunar grains. Artificial irradiation produced similar films, the thicknesses of which vary with bombarding energy. These observations indicate that the lunar soil will be useful in studying the ancient solar wind and its energy fluctuations.

5. The concentrations of hydrocarbons (mainly methane and ethane) correlate with the solar wind irradiation of different lunar soils. These compounds are possibly formed in the superficial layers of individual dust grains that have been heavily irradiated with solar wind ions. Since interstellar space contains both dust clouds and sources of energetic particles, these processes may be important for organic synthesis in the galaxy as a whole. Some effects may also be due to local melting resulting from meteorite impacts and subsequent redeposition.

6. Related studies in lunar soils on the light, stable isotopes of carbon, nitrogen, oxygen, silicon, and sulphur show significant departures from terrestrial and meteoritic values; values are also different from those of the lunar basalts themselves and are apparently produced by the unique irradiation and bombardment history of the soil. Nitrides, cyanide, and phosphides, as well as benzene, also are present, and their production may be due to similar processes.

b. Solar-flare particles: For the first time, information about the solar-flare activity on the sun over geologic times has been obtained. This information is contained in the induced radioactivities and nuclear-particle tracks produced in the outer layers of lunar surface material. One important conclusion is that the average solar-flare activity has not changed appreciably over the past few million years. It has also been shown that solar flares were active at least 0.5 billion years ago and probably date back to the original formation of the lunar surface. The observed constancy of solar flares suggests that major climatic changes during the last million years have not been associated with large-scale changes in solar activity as had previously been postulated.

### 3.2.30 Long-Term Lunar Surface Exposure

Selected hardware was photographically documented and left on the moon during the Apollo 17 mission. Samples of similar material were set aside for long-term storage on earth. The purpose is to allow comparison of the materials at some future time. The long-term effect of the lunar environment on the materials thus can be evaluated if the Apollo 17 lunar site is revisited.

### 3.2.31 Far-Ultraviolet Camera/Spectrograph

A far-ultraviolet camera/spectrograph experiment (fig. 3-26) was operated on the lunar surface during the Apollo 16 mission. Among the data obtained were images and spectra of the terrestrial atmosphere and geocorona in the wavelength range below 1600 angstroms. These data gave the spatial distributions and relative intensities of emissions due to atomic hydrogen, atomic oxygen, molecular nitrogen, and other elements - some observed spectrographically for the first time. A more detailed account of the findings of this experiment can be found in reference 3-37.

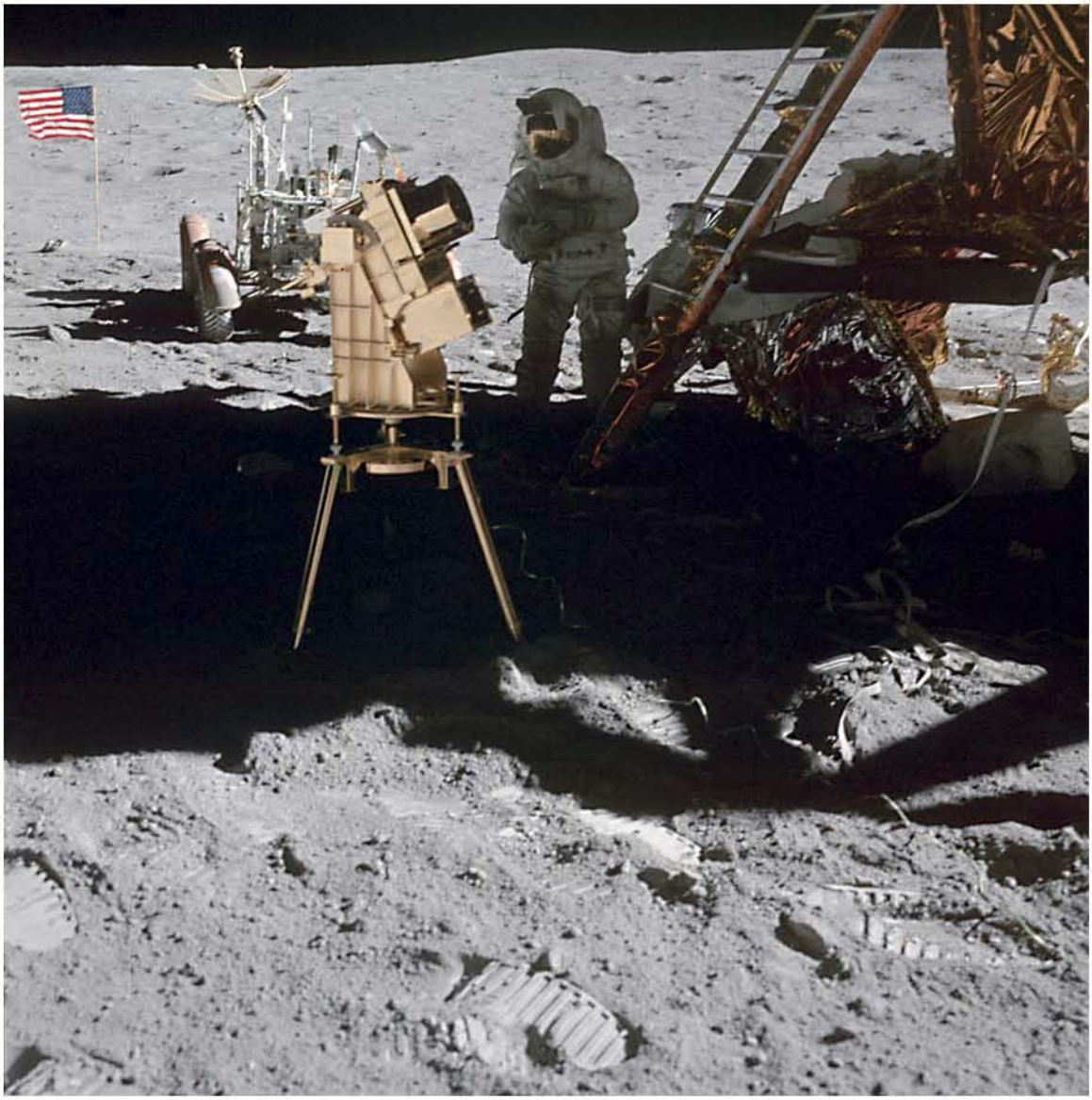

Figure 3-26.- Far ultraviolet camera/spectrograph experiment.

## 3.3 LUNAR ORBITAL SCIENCE

The results of scientific experiments and detailed objectives performed while in lunar orbit and, in some cases, during flight to and from the moon are summarized in this section. Table 3-VII lists these experiments and objectives and identifies the missions to which they were assigned. Many of the experiments complement each other, and some complement experiments placed on the lunar surface or flown on other programs. Some also support more than one science discipline.

Through the Apollo 14 mission, the science-related activities were limited almost entirely to those that could be accomplished through crew photography or visual observations, to lunar surface experiments, and to ground-based investigations that utilized spacecraft systems. The principal portion of the lunar orbital science program was accomplished on the final three (J-series) missions. A scientific instrument module was installed in a section of the service module as shown in figures 3-27 and 3-28.

As described in paragraph 4.4.4.6, mechanical deployment devices were developed for the Apollo 15, 16, and 17 scientific instrument modules so that certain instruments could be moved away from X-ray secondary radiation and the contamination cloud that surrounded the spacecraft, or so that the desired photographic angles could be obtained. These devices and the instruments themselves were remotely controlled by the crew from the command module. In addition, provisions were made for the Apollo 15 and 16 crews to launch particles-and-fields subsatellites into lunar orbit by means of remotely controlled deployment mechanisms located in the scientific instrument module bays (fig. 3-29). The subsatellites contained charged particle detectors, a biaxial fluxgate magnetometer, an optical solar aspect system (for attitude determination), a data storage unit, a power system, a command decoder, and an S-band communications system.

Experiment design and allocation were constrained by the usual spacecraft limitations of weight, volume, and power. The total weight of the scientific instrument module experiments was limited to approximately 700 pounds per mission. In addition, there were other constraints and requirements that were unique to these instruments. For example, individual, deployable covers were required for most of the instruments to protect them from the effects of service module reaction control system plume heating and contamination and from possible contamination from spacecraft effluents (waste water dumps, urine dumps, and fuel cell purges). During the missions, when these protective covers were open for data acquisition, it was necessary to inhibit the firing of four of the reaction control system thrusters - the two that fired across the scientific instrument module bay and the two that fired downward, alongside the scientific instrument module bay. Additionally, whenever the covers were open, the spacecraft attitude had to be constrained to prevent entrance of direct sunlight into several of the instruments' fields of view; otherwise, data degradation or permanent instrument damage would have occurred. Until several hours prior to lunar orbit insertion, the instruments were protected by a panel that enclosed the entire scientific module bay. This panel was cut and jettisoned by pyrotechnic devices.

About 30 000 photographs of the lunar surface were obtained from lunar orbit on the Apollo missions. Approximately 15 000 of these were taken by hand-held 70-millimeter electric cameras during Apollo missions 8 through 17; 10 000 by mapping cameras during the Apollo 15, 16, and 17 missions; and 5000 by panoramic cameras during the Apollo 15, 16, and 17 missions. Only a fraction of the large number of photographs obtained have been studied in detail. Most of the completed analyses have been used to support mission operations and science objectives of many experiments and detailed objectives.

### 3.3.1 Bistatic Radar

The bistatic radar experiment was conducted on the Apollo 14, 15, and 16 missions, and utilized existing command and service module S-band and VHF radio communication systems. Its purpose was to determine the principal electromagnetic and structural properties of the lunar surface from observations of S-band and VHF signals which were transmitted from the command and service module in lunar orbit, reflected from the moon, and monitored on earth. The S-band (13-centimeter-wavelength) transmissions were received by the 64-meter-diameter antenna located at Goldstone, California, and the VHF (116-centimeter-wavelength) transmissions by the 46-meter-diameter antenna erected on the Stanford University campus at Palo Alto, California.

TABLE 3-VII.- APOLLO ORBITAL SCIENCE SUMMARY

| Experiment/objective | Experiment number | Mission | | | | | | | | |
|---|---|---|---|---|---|---|---|---|---|---|
| | | 8 | 9 | 10 | 11 | 12 | 14 | 15 | 16 | 17 |
| Bistatic radar experiment | S-170 | | | | | | X | X | X | |
| S-band transponder experiment | S-164 | | | | | | | | | |
| CSM/LM | | | | | | | X | X | X | X |
| Subsatellite | | | | | | | | X | X | |
| Infrared scanning radiometer experiment | S-171 | | | | | | | | | X |
| Lunar sounder experiment | S-209 | | | | | | | | | X |
| [a]Particle shadows/boundary layer experiment | S-173 | | | | | | | X | X | |
| [a]Magnetometer experiment | S-174 | | | | | | | X | X | |
| Cosmic ray detector (helmets) | S-151 | X | | | | X | | | | |
| Apollo window meteoroid | S-176 | | | | | | X | X | X | X |
| Gamma-ray spectrometer experiment | S-160 | | | | | | | X | X | X |
| X-ray fluorescence experiment | S-161 | | | | | | | X | X | |
| Alpha-particle spectrometer experiment | S-162 | | | | | | | X | X | |
| Mass spectrometer experiment | S-165 | | | | | | | X | X | |
| Far ultraviolet spectrometer experiment | S-169 | | | | | | | | | X |
| Lunar mission photography from the command and service module | -- | X | | | | | | | | |
| Lunar multispectral photography | S-158 | | | | | X | | | | |
| Candidate exploration sites photography | -- | | | | | X | X | | | |
| Selenodetic reference point update | -- | | | | | X | X | | | |
| Transearth lunar photography | -- | | | | | | X | | | |
| [b]Service module orbital photographic tasks | -- | | | | | | | X | X | X |
| Command module orbital science photography | -- | | | | | | X | | | |
| Visual observations from lunar orbit | -- | | | | | | | X | X | X |
| Gegenschein from lunar orbit experiment | S-178 | | | | | | X | X | X | |
| Ultraviolet photography - earth and moon | S-177 | | | | | | | X | X | |
| Dim light photography | -- | | | | | | X | | | |
| Command module photographic tasks | -- | | | | | | | X | X | X |

[a]Particles and fields subsatellite experiments.

[b]Included panoramic camera photography, mapping camera photography and laser altimetry. Also supported geology objectives.

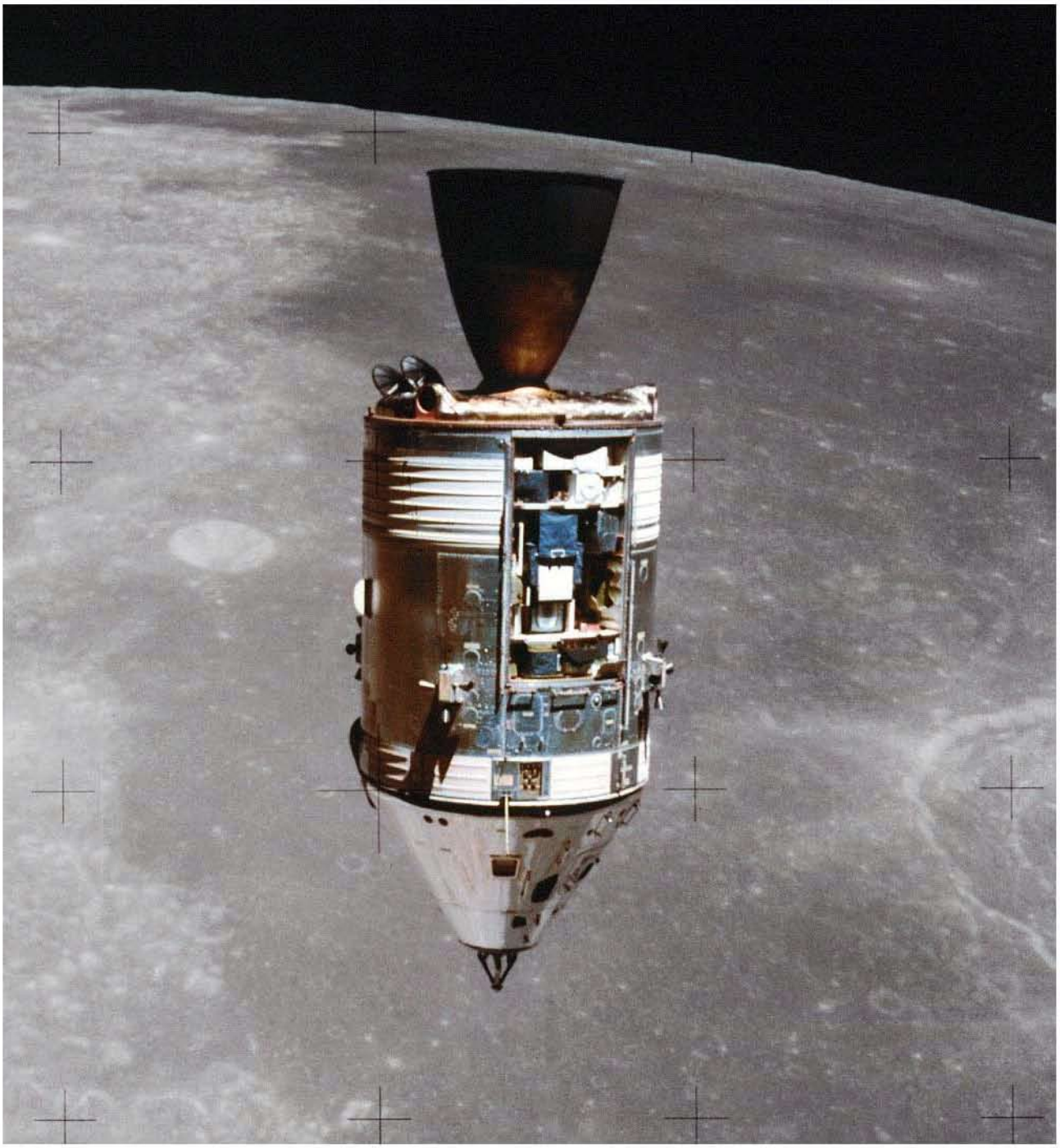

Figure 3-27.- Scientific instrument module bay viewed from the lunar module.

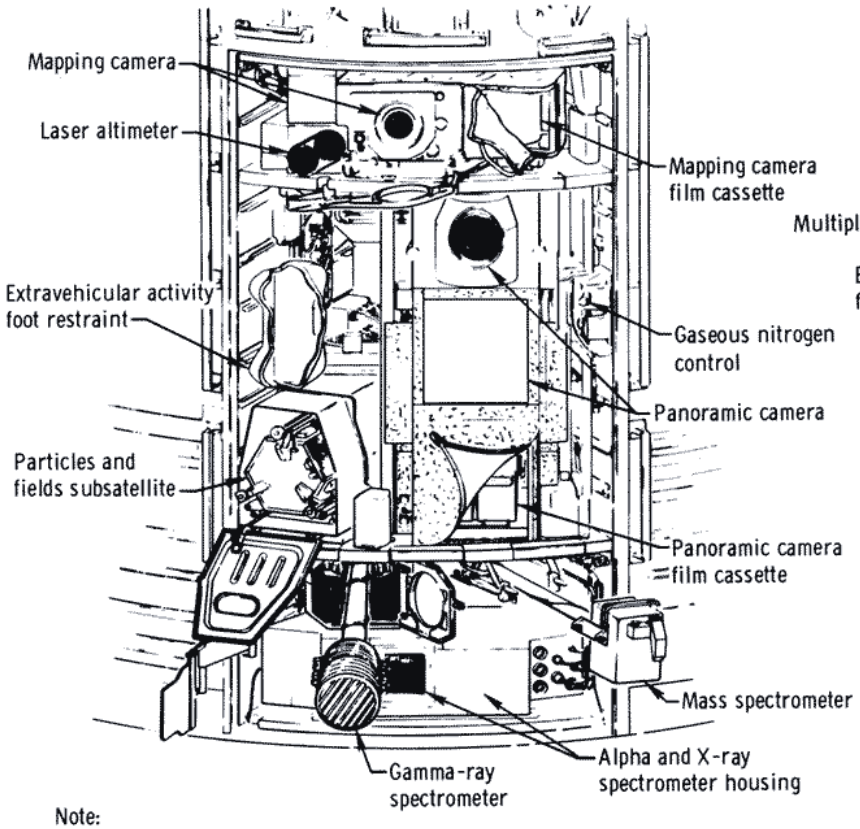


Note:
Mass spectrometer and gamma-ray spectrometer are shown partially deployed.
Some protective covers are not shown.

(a) Apollo 15 and 16 configuration

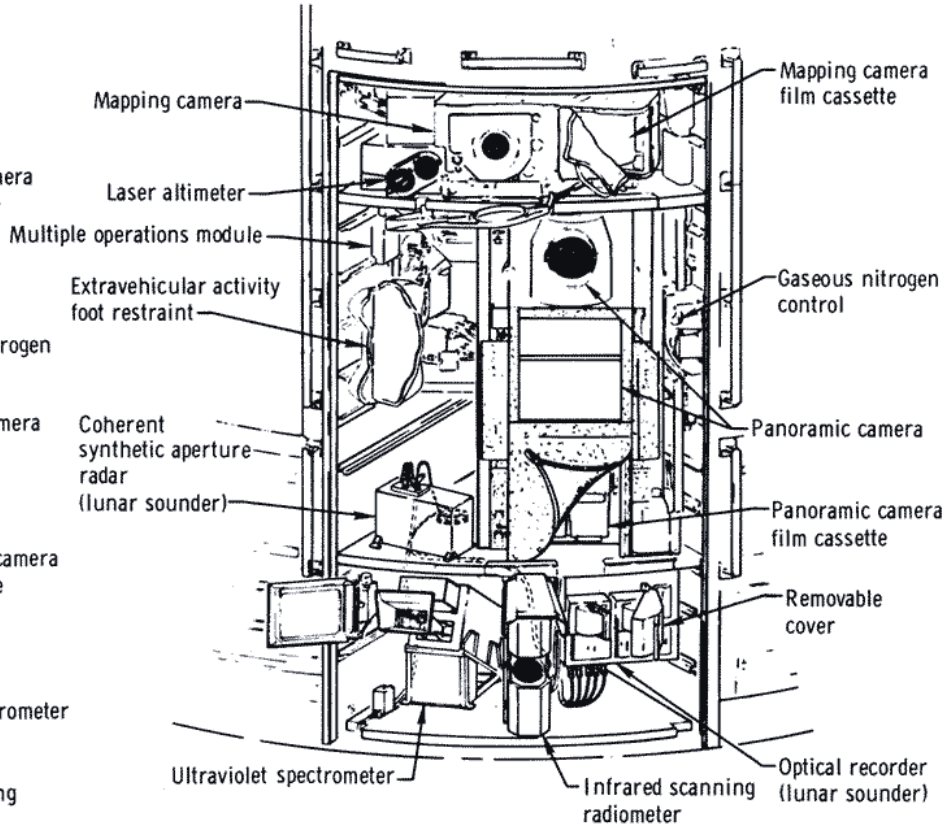


(b) Apollo 17 configuration

Figure 3-28. - Scientific instrument module configurations.

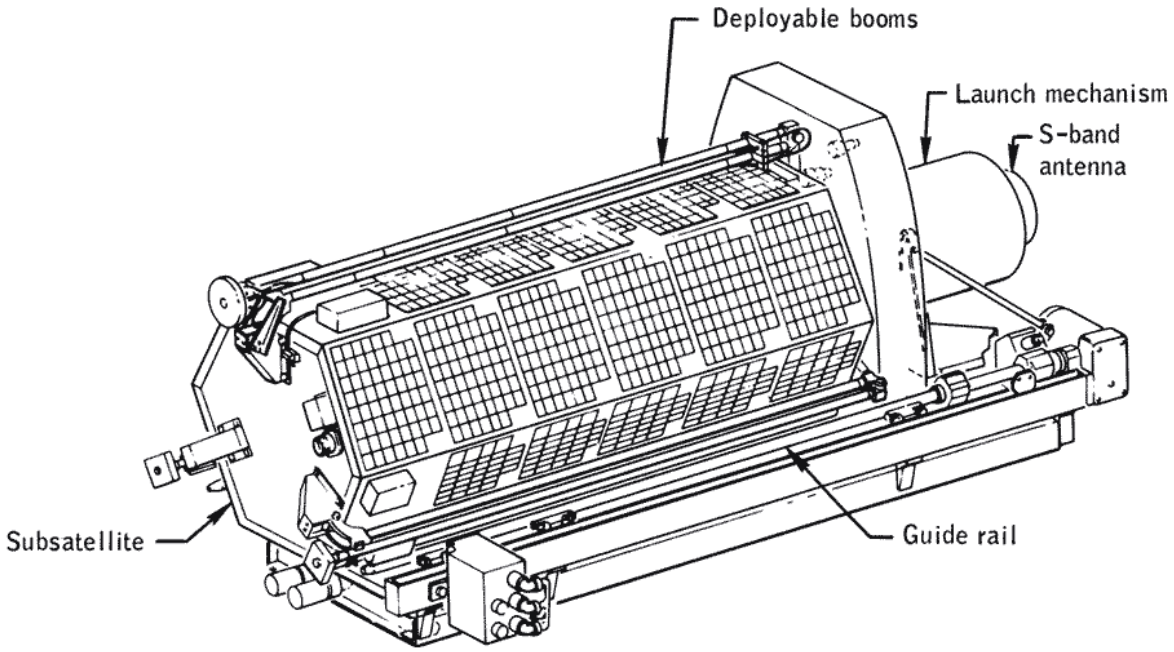


(a) Subsatellite predeployment configuration

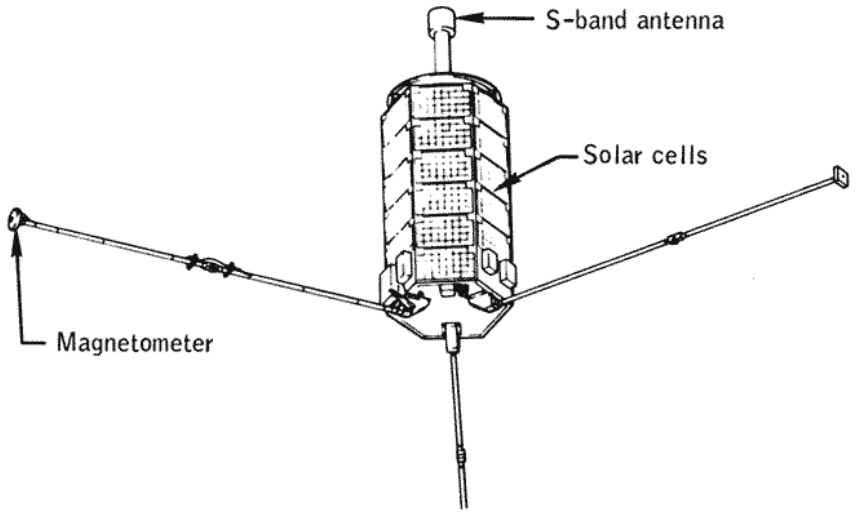


(b) Deployed subsatellite

Figure 3-29.- Subsatellite.

On the Apollo 14 mission, observations were conducted using the S-band and VHF systems simultaneously on nearly one-third of a near-side pass, and with the VHF system alone during four complete near-side passes. Good data were obtained during all observational periods. Echoes received at antennas of the earth monitoring stations were of predicted strength with signal frequency, phase, polarization, and amplitude being recorded. Comparison of the received echoes with the known characteristics of the transmitted signal yielded quantitative information about lunar crustal properties such as dielectric constant, average slope and slope probability, and small-scale surface roughness. Effects of bulk surface electrical properties such as the Brewster angle were clearly visible at both the S-band and VHF frequencies. Comparisons of radar experiment results with interpretive geologic maps and quantitative topographic work using, primarily, photogrammetric techniques showed excellent agreement.

The radar experiment configuration for the Apollo 15 mission differed from that of the Apollo 14 mission in that the S-band high-gain antenna was used instead of the S-band omnidirectional antenna system. This change resulted in a significant improvement in the quality of both S-band and VHF data. Simultaneous S-band and VHF observations were successfully conducted during one complete near-side pass, and VHF data were obtained during four complete near-side passes. Excellent data were received during these five observation periods, representing nearly an order-of-magnitude improvement in the signal-to-noise ratio with respect to the Apollo 14 experiment. For the first time, bistatic radar data were received from significant lunar features which included the Sea of Serenity, the Apennine Mountains, the middle portion of the Ocean of Storms, and the Marius Hills. The S-band data analysis indicated that the area surveyed during the Apollo 15 mission is largely homogeneous and very similar to the regions sampled at lower altitudes during the Apollo 14 mission. Although distinct variations in centimeter-to-meter-length slopes exist, the vertical structure of the surface appeared remarkably uniform.

The Apollo 16 experiment configuration was the same as that for Apollo 15. Simultaneous S-band and VHF observations were conducted during one complete near-side pass, and VHF data observations were made on four complete near-side passes. Although the S-band data received were of excellent quality, the VHF echoes were weak due either to a command and service module attitude problem or to an inflight equipment malfunction. Another problem was interference from NASA satellite TETR-D, originally launched for Apollo communication system testing and training exercises.

Results of data reduction and analyses for all three missions reveal that the oblique geometry scattering properties of the moon's surface are wavelength-dependent in the decimeter-to-meter range, that the scattering law is highly dependent on local topography, and that systematic differences exist in the average scattering properties of mare and highland units. At 13 centimeters, the reflectivity of mare surfaces is remarkably uniform except for local deviations associated with specific features; the 116-centimeter results are frequently in sharp contrast with those at the shorter wavelength. The highlands ejecta south of Mare Crisium (Sea of Crises) exhibit a dielectric constant of about 2.8 at the 116-centimeter wavelength and a lower value at the 13-centimeter wavelength. In the Apennines and central highlands, both wavelengths show a reduced reflectivity consistent with a dielectric constant decrease from 3.1 to 2.8.

The 116-centimeter variations that do not correlate with the 13-centimeter data cannot be caused by surface effects because such effects would also be observed at the shorter wavelength. Explanation of the differential behavior, in some cases, requires layering or an inversion of density with depth such as might be produced by a flow over older regolith.

Apollo 14 observations suggest that the upper 5 to 50 centimeters of the crust must be extremely uniform over the surface of the moon or that the change with depth must be gradual. Surface-modifying processes have apparently acted to these depths along the major portion of the radar groundtracks. Further, the 116-centimeter data suggest that there must be large variations (on the order of 2 to 1) in impedance contrast within 1 to 10 meters of the surface. Variation in depth of a thin regolith or covering blanket is one obvious candidate to model this effect.

The root-mean-square slopes deduced from the Apollo 14 and 15 spectra exhibit very systematic behavior with respect to maria, highlands, and discrete features such as craters. Typical highland slopes are in the range of 5 to 7 degrees at both wavelengths suggesting that, on the scale lengths of 30 to 300 meters, the surface has equal roughness. Within the maria, the 13-centimeter slopes are typically within 2 to 4 degrees, but those obtained at 116 centimeters are only half as large (ref. 3-38).

### 3.3.2 S-Band Transponder

The S-band transponder experiment was successfully conducted during the Apollo 14, 15, 16, and 17 missions. On all four missions, experiment data were derived from the lunar-orbiting command and service module and lunar module. In addition, the experiment was supported during the Apollo 15 and 16 missions by an S-band transponder mounted in the subsatellites that were launched from the command and service modules into lunar orbit. The purpose of the experiment was to measure the lunar gravitational field which, in turn, provided information on the distribution of lunar mass and its correlation with surface features such as craters, mountains, and maria.

No instruments were required on the command and service modules and lunar modules other than the existing S-band communications systems. A transponder system designed specifically for the experiment was contained in the two subsatellites. These systems operated in conjunction with the earth-based radio tracking system. Experiment data consisted of variations in spacecraft speed as measured by the tracking system. However, these line-of-sight velocity measurements could be obtained only while the spacecraft were in view of the earth. Information about the far side gravity field must therefore be indirectly inferred from spacecraft conditions immediately after lunar occultation and over many revolutions.

Good command and service module and lunar module data were obtained despite some degradation resulting from a high-gain antenna problem during the Apollo 14 mission and spacecraft attitude instability during the Apollo 15 and 16 missions due to reaction control system thruster attitude control firings. Both the Apollo 15 and Apollo 16 subsatellites provided excellent quality tracking data until May 29, 1972, when the Apollo 16 subsatellite crashed on the moon; the Apollo 15 subsatellite continued to provide tracking data until August 23, 1973.

In general, comparison of tracking data from the three spacecraft and from lunar areas overflown on more than one mission shows close agreement in the results. The following general conclusions have been drawn from reduced data (refs. 3-39 and 3-40).

a. All unfilled craters and those having diameters less than 200 kilometers are negative anomalies (negative gravity regions); Ptolemaeus Crater is an example of the latter type.

b. Filled craters and circular seas with diameters greater than about 200 kilometers are positive anomalies (positive gravity regions), or are mascons. The smallest of this type is the crater Grimaldi, which has a diameter of 150 kilometers; an exception is the unique Sinus Iridum (Bay of Rainbows).

c. The largest mascons detected are in the region of the Sea of Nectar, the Sea of Serenity, and the Sea of Crises. Part of the central highlands appears as a positive anomaly, and mountain ranges observed thus far (Marius Hills and Apennine Mountains) are positive anomalies.

### 3.3.3 Infrared Scanning Radiometer

Accomplished successfully during the Apollo 17 mission, the infrared scanning radiometer experiment obtained thermal emission measurements of the lunar surface for use in developing a high-resolution temperature map of the lunar surface. The experiment instrument, located in the scientific instrument module, operated normally throughout the mission, and all mission objectives were achieved.

Infrared radiometer data were obtained for 100 hours in lunar orbit during which time about 30 percent of the lunar surface was scanned. Approximately 100 million temperature measurements were obtained over the full lunar temperature range of 80° to 400° K. Temperature resolution was 1° K with a precision of about ±2° K; spatial resolution was approximately 2 kilometers over most of the horizon-to-horizon scan. The experiment was also operated for 10.5 hours during transearth coast to support a study of the contamination environment in the vicinity of the spacecraft.

Data analyses disclose that the nighttime cooling behavior of the moon varies. The Ocean of Storms shows a substantial number of thermal structure variations, ranging from large crater anomalies to small-scale features below the instrument resolution of less than 2 kilometers. Far fewer thermal features are evident in other areas along the spacecraft lunar surface groundtrack; in particular, only a few anomalies are revealed by nighttime scans of the lunar far side. Although cold anomalies are evident throughout the data, they are usually small features which may represent indigenous activity geologically recent in time. Additional information may be found in reference 3-41.

### 3.3.4 Lunar Sounder

The lunar sounder experiment, flown on the Apollo 17 mission, obtained electromagnetic soundings of the moon for use in developing a selenological three-dimensional model to a depth of about 1.3 kilometers. The equipment was installed in the service module and consisted of a coherent synthetic aperture radar, the associated antennas, and an optical recorder. The radar system operated in the two HF bands of 5 megahertz (HF 1) and 15 megahertz (HF 2), or in the VHF band of 150 megahertz, and transmitted a series of swept frequency pulses. A small part of the pulse energy was reflected from the lunar surface and subsurface features and subsequently was detected by a receiver on the spacecraft. The radar video output from the receiver was recorded by the optical recorder on film, and the film cassette was retrieved during transearth extravehicular activity.

Experiment data were obtained in lunar orbit for 10 hours. The HF 1, HF 2, and VHF data were collected during six complete revolutions (two for each frequency band) and from specific lunar targets. The instrument was operated in the receive-only mode on both the lunar near side and far side, and near the landing site with and without transmission of signals by the surface electrical properties experiment deployed on the lunar surface. The experiment was also operated in the receive-only mode for 24 hours during transearth coast to determine sources of terrestrial noise.

Several experiment hardware anomalies occurred during the mission. The most serious was failure of the VHF echo tracker to keep the leading edge of the return signal on film; as a result, nadir return from both mare and highlands (and thus, sounding capability) was lost up to 50 percent of the time. Sounding data were also limited because the HF 2 channel energy was down 10 to 20 decibels relative to the HF 1 channel, as compared to premission values of 7 to 8 decibels. In addition, operational delays were caused by a faulty antenna extension/retraction mechanism and talkback indicator (attributed to low temperatures); however, neither data quantity nor quality was lost.

The VHF images produced by optical processing were of excellent quality and the VHF profile, where available, was quite satisfactory for addressing local selenomorphological problems. Tentative subsurface returns have been identified in both the HF 1 and VHF channels. Based on preliminary analyses, the data appear to have satisfied experiment requirements. Telemetry monitoring of average reflected power indicated that the mare and highlands exhibited markedly different reflectivity for both HF and VHF radar frequencies. Data were consistent with distinct layering in the mare as would be expected were the mare flooded by successive layers of lava; predicted topographic signatures over features such as craters and mare ridges have been confirmed in principle. A preliminary scan of a limited length of film indicates that both the radar images of lunar surface at the VHF frequency and the echoes delayed in time relative to the surface echo at the HF frequencies have been imprinted on film.

Preliminary data analyses also reveal that the power levels of VHF- and HF-reflected signals were very close to those predicted from premission system analyses and the known dielectric constant of the lunar surface. Electromagnetic radiation from earth in the HF 2 mode is much stronger than expected but does not appear to have degraded the active radar sounding of the lunar near side. Earth radiation is occulted by the moon and can be minimized by proper orientation of the radar antenna. Additional preliminary results are given in reference 3-42.

### 3.3.5 Particle Shadows/Boundary Layer

The instruments for the particle shadows/boundary layer experiment were installed in the subsatellites launched into lunar orbit during the Apollo 15 and Apollo 16 missions. The instruments in each subsatellite consisted of two silicon nuclear particle telescope detectors and four spherical electrostatic analyzer detectors. The objectives of the experiment were to describe the various plasma regimes in which the moon moves, to determine how the moon interacts with the plasma and magnetic fields in the environment, and to determine certain features of the structure and dynamics of the earth magnetosphere.

Shortly after launch of the Apollo 15 subsatellite in lunar orbit, an inconsistency was noted in the particle experiment count data. This was traced to a design error. The data were not lost, but data reduction was more complex. The design error was corrected in the Apollo 16 subsatellite. Failures of the Apollo 15 subsatellite on February 3 and February 29, 1972, resulted in the loss of most operational and experiment data. As noted in section 3.3.7, the Apollo 16 subsatellite impacted the lunar surface after orbiting for approximately 1 month. During its lifetime, however, it provided excellent quality data.

Data were obtained as the subsatellites encountered four distinct regions of magnetized plasma (fig. 3-30): the solar wind; the bow shock, which appears on the sunward side of the earth magnetosphere; the magnetosheath, which lies between the bow shock and the earth magnetosphere; and the magnetotail. In addition to the plasma and energetic particle characteristics of these regions, particles from the sun also appear after chromospheric flares occur or active centers pass across the solar disk. Results from the Apollo 15 and 16 experiments essentially agree (refs. 3-43 and 3-44). The findings are summarized as follows.

a. A wide variety of particle shadows has been measured; the shadow shapes agree well with the theory that has been developed and verify that the magnetotail magnetic field lines are generally "open" in the sense that they connect directly from the earth polar caps to the interplanetary magnetic field.

b. The cavity formed in the solar wind by the moon has been observed in the fast-electron component of the solar wind. When the interplanetary magnetic field is aligned approximately along the solar wind flow, the electrons are almost completely excluded from the cavity. When the magnetic field is aligned more nearly perpendicular to the solar wind flow, the solar wind shadow structure (as defined by the fast-electron component) becomes extremely complex. The shadow structure becomes much broader than the lunar diameter and may become very shallow.

c. A weak flux of electrons in the energy range of 25 000 to 300 000 electron volts was able to move predominantly in a sunward direction for a period of several days while the moon was upstream from the earth in interplanetary space. No determination has been made as to whether these particles have a solar or terrestrial origin.

d. Flux of solar electrons was measured after two important solar flares occurred. An electron spectrum for the energy range of 6000 to 300 000 electron volts was determined from Apollo 15 measurements of the first flare that occurred on September 1, 1971. After a major hydromagnetic shock wave that was generated on May 15, 1972, the Apollo 16 experiment measurements indicated that fluxes of electrons at energies above approximately 2000 electron volts increased by more than an order of magnitude above background levels; energetic proton fluxes throughout the event were typically higher than electron fluxes at the same energy by a factor of 10.

e. Magnetotail electric fields have been determined from particle shadow boundary displacements. Their magnitude ranges from zero to more than 1 volt per kilometer, typically, 0.2 to 0.3 volts per kilometer, oriented in a generally east-to-west direction, indicative of solar wind induction driven convection toward a magnetic neutral line merging region in the center of the magnetotail.

f. Low energy electron fluxes characteristic of the plasma sheet observed by satellites passing through the magnetotail nearer the earth are also frequently observed from lunar orbit. The location of plasma sheet encounters appears to be less closely confined to regions near the magnetic neutral sheet (field reversal region) than is observed closer to the earth.

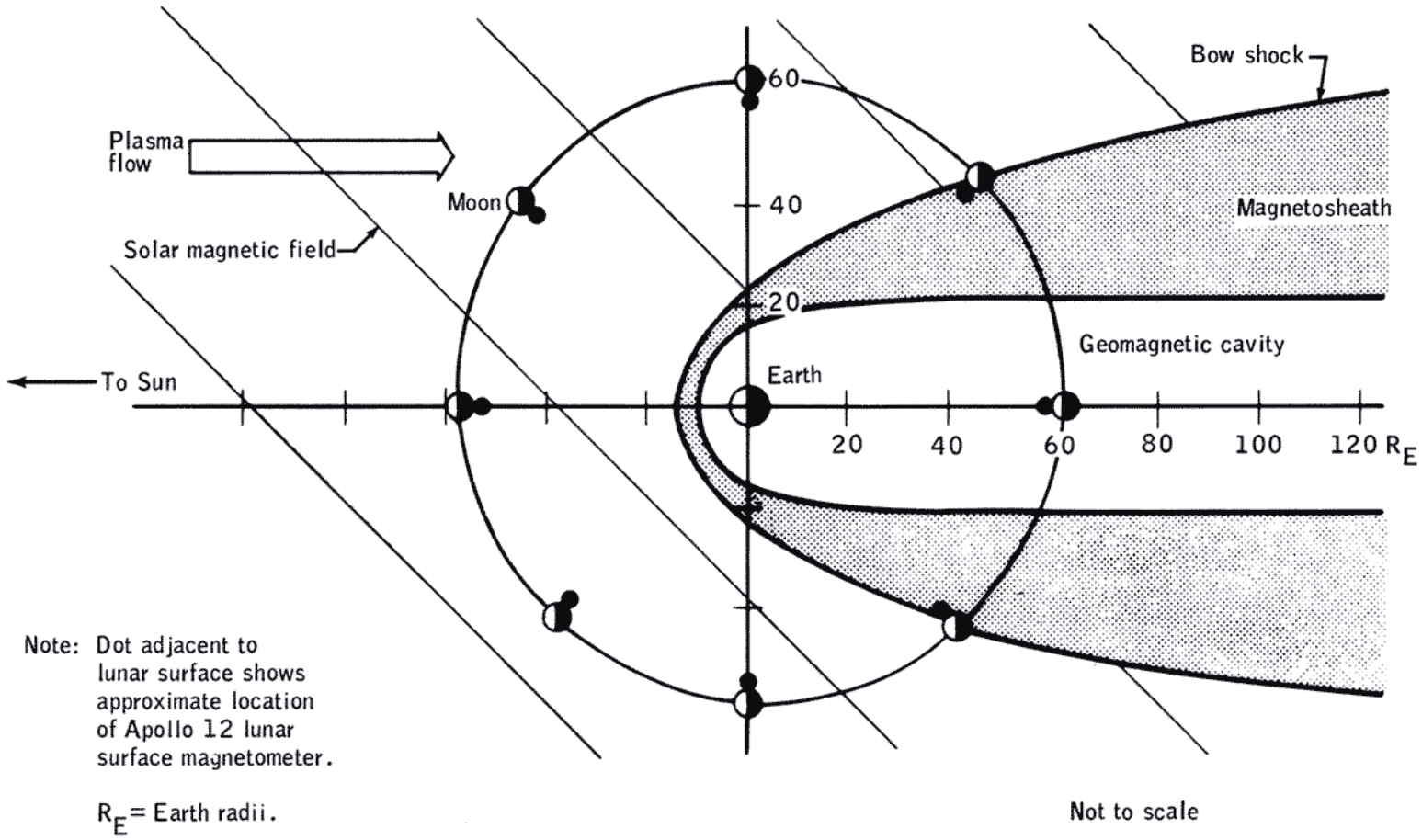


Note: Dot adjacent to lunar surface shows approximate location of Apollo 12 lunar surface magnetometer.

$R_E$ = Earth radii.

Not to scale

Figure 3-30.- Near-earth space traversed by moon.

g. Areas are observed to exist where 15 000-electron-volt electrons are reflected back to the spacecraft from the direction of the moon, probably by regions of remanent surface magnetism of sufficient magnitude to exceed the "mirroring" value for electrons.

### 3.3.6 Magnetometer

A biaxial flux-gate magnetometer was also included in the Apollo 15 and Apollo 16 subsatellites to calculate the interior electrical conductivity of the moon, to survey the remanent magnetization of the lunar surface, and to study the interaction of the moon with its plasma environment. The magnetometer was boom-deployed from the subsatellite and measured the magnitude and polarity of two mutually orthogonal vector components, one parallel and the other perpendicular to the spin axis of the subsatellite. Experiment results (refs. 3-45 and 3-46) are summarized in the following paragraphs.

Data obtained in the magnetotail by the Apollo 15 and Apollo 16 experiments show that lunar remanent magnetism can be mapped from a single orbiting vehicle. However, high-resolution maps of magnetic features can be achieved only with dual magnetometer surveys in order to separate temporal and spatial changes in the fields, or with low-altitude data below 70 kilometers. The latter data are available from the Apollo 15 and Apollo 16 missions only for limited areas. Although the character of the magnetic features observed tends to follow the character of the lunar topography beneath the subsatellite, there is no one-to-one correlation of magnetic signature with surface features.

The approximate nature of this correlation was shown by constructing a high-resolution contour map of lunar contribution to the solar-directed component of the magnetic field as measured on the Apollo 15 subsatellite at an altitude of 67 kilometers in the Van de Graaff region. The map shows a well-defined feature with a 4.5 gamma peak-to-valley variation. This feature is clearly not centered over Aitken or Van de Graaff, which suggests that these magnetic features are not necessarily associated with crater formation (ref. 3-46).

The subsatellite data obtained in the solar wind indicate that diamagnetic enhancement and rarefaction dips discovered by Explorer 35 magnetometers are also distinctly present at the much lower altitude of approximately 100 kilometers. The phenomenon of large increases in the field external to the rarefaction dips is also clearly observed and appears to be stronger at the subsatellite altitude.

### 3.3.7 Subsatellite Performance

The two particles and fields subsatellites were launched from the Apollo 15 and 16 command and service modules and were to be operated in lunar orbit for a 1-year period.

3.3.7.1 Apollo 15.- The Apollo 15 subsatellite was launched into lunar orbit August 4, 1971, and performed satisfactorily in all modes of operation until February 3, 1972. Data were lost from about one-third of its measurements beginning on February 3, 1972, during its 2203rd lunar revolution. Data from additional measurements were lost beginning February 29, 1972, during its 2520th lunar revolution.

Analysis of the data indicated the data loss was the result of multiple failures within a single integrated circuit flatpack in the bilevel, main-frame, and drivers board of the digital electronics unit. The cause of the integrated circuit failure is not known. Following the failure, the subsatellite continued operation with the remaining particles experiment measurements, but primarily as an S-band transponder lunar gravity experiment.

The last tracking pass for the subsatellite was on August 23, 1973, on its 9046th lunar revolution. One of the requirements for the silver-cadmium battery was for a cell life for a 365-day space mission with 5000 charge/discharge cycles. The flight battery was activated in August 1971, and accumulated over 8000 charge/discharge cycles by April 1973 when it began showing charging problems and data became intermittent. This performance was in agreement with battery life predictions based on the results from the Pioneer spacecraft battery life tests. It ceased charging in August 1973 after approximately 9400 cycles.

3.3.7.2 Apollo 16.- The Apollo 16 subsatellite was launched into lunar orbit April 24, 1972, and performed satisfactorily in all modes of operation until impacting the lunar surface on May 29, 1972.

The execution of a command and service module orbit shaping maneuver had been planned before launching the subsatellite so as to place it in an orbit which would insure 1-year operation. However, the orbit-shaping maneuver was deleted because of a command and service module malfunction, and the subsatellite was placed in an orbit which was different from the one planned. The orbit into which the subsatellite was launched resulted in a short orbital life with an early impact of the subsatellite on the lunar surface.

### 3.3.8 Cosmic Ray Detector (Helmets)

Five helmets were used as heavy-particle dosimeters in the cosmic ray detector experiment: one worn during the Apollo 8 mission (December 21 to 27, 1968), three worn during the Apollo 12 mission (November 14 to 24, 1969); and a control helmet that was exposed to cosmic rays at a balloon altitude of 41 kilometers (July 11 and 12, 1970). After exposure, the helmets were chemically etched to reveal tracks caused by heavy cosmic ray nuclei.

Track observations show that the integrated flux of heavily ionizing cosmic rays striking Apollo 12 helmets was 3.1 times greater than that of the Apollo 8 helmet. The track formation rate for Apollo 12 helmets was 2.0 times higher than that of the Apollo 8 helmet, even when allowances were made for the differences in mission duration; the rate for the control helmet was 3.1 times higher than that of the Apollo 8 helmet and about 1.45 times higher than that of the Apollo 12 helmets. Helmet locations in the spacecraft and variations in spacecraft shielding produced no meaningful statistical differences between the track densities of the Apollo 12 helmet exposed only in the command and service module and those exposed in the lunar module and on the lunar surface. Instead, doses at the helmet depended primarily on the intensity of solar activity during the mission.

### 3.3.9 Apollo Window Meteoroid

The Apollo window meteoroid experiment utilizes heat shield windows from the recovered command module spacecraft (1) to obtain information about the flux of meteoroids with masses of $10^{-7}$ gram and less, (2) to examine the residue and morphology of the craters produced by these meteoroids for information regarding the dynamic and physical properties of the meteoroids, (3) to discover possible correlations with lunar-rock-craters studies, and (4) to obtain information on meteoroid composition and mass density.

The Apollo window meteoroid experiment was officially assigned to Apollo missions 14, 15, 16, and 17. With the exception of Apollo 11, however, the windows of all Apollo command modules have been examined for contamination and for meteoroid impact craters having diameters of 40 micrometers and larger. Contamination by hard chemical deposits was observed on the outer surfaces of all returned windows. Chemical analyses show that the contamination sources were the Mylar coating on the heat shield surface, reaction control system thruster nozzle residue, and charred heat shield material (ref. 3-47). A high percentage of sodium was produced by the thruster nozzles and heat shield char, of magnesium by thruster nozzles, and of titanium and silicon by the Mylar coating. A number of other surface effects from low-velocity particles has also been found after many of the missions, probably originating from the reaction control system thrusters and the jettison rocket of the command module launch escape system.

Approximately 3.5 square meters of Apollo window surfaces have been scanned at a general level of 20x magnification. Ten meteoroid impact craters have been found: five of these were on the Apollo 7 windows, one each on the Apollo 8, 9, and 13 windows, two on the Apollo 14 windows, and none on the Apollo 15, 16, and 17 windows. Data for craters ranging from 1 to 40 micrometers indicate that the meteoroid mass limit at the detection threshold for the 20x scan is about $10^{-11}$ gram. Combining these test data with previous hypervelocity data in glass targets indicates that several crater regimes exist for craters ranging from 250 micrometers to 4 centimeters: Initially, there is a hemispherical crater, typical of those in soft metal, with a lip extending around the target surface; a space zone then forms at a higher energy, removing the lip; and,

at still higher energy levels, outer space zones appear and the original hemispherical crater is ejected, leaving a conical residual crater with conchoidal ridges. The mass limit of $10^{-11}$ gram for the 20x scan represents a meteoroid of approximately 4 micrometers in diameter at the average meteoroid velocity of 20 kilometers per second and mass density of 2 grams per cubic centimeter.

Experiment results indicate that the flux represented by the number of observed impacts and area-time exposure is compatible with the flux estimates obtained from the results of penetration sensors mounted on the Pegasus 1, 2, and 3 satellites and on the Explorer 16 and 23 satellites; from Surveyor III data; and from a near-earth environment model. Although the extent of window contamination leaves some doubt that meteoroid composition can be positively distinguished from residue associated with each crater, the capability of this experiment to detect meteoritic residue cannot be discounted.

### 3.3.10 Gamma-Ray Spectrometer

Gamma-ray spectrometer instruments were flown on the Apollo 15 and 16 missions. The experiment was conducted while in lunar orbit to obtain data on the degree of chemical differentiation that the moon has undergone and the composition of the lunar surface. The equipment was also operated during transearth coast to provide calibration data on spacecraft and space background fluxes, and to provide data on galactic gamma-ray flux. A gamma-ray detector, capable of measuring gamma radiation in the energy range from 200 000 to 10 million electron volts, was mounted on an extendable boom located in the scientific instrument module. The boom could be extended 25 feet, extended to two intermediate positions, retracted, or jettisoned by the crew by using controls in the command module crew station. Controls were also provided to activate or deactivate the spectrometer, incrementally alter the sensitivity (gain) of the detector, and select either of two detector counting modes.

On the Apollo 17 mission, a sodium iodide crystal identical to those used as the detector scintillator on the Apollo 15 and 16 missions was flown as a calibration reference for interpretation of Apollo 15 and 16 data.

On the Apollo 15 and 16 missions, data were collected in lunar orbit and during transearth coast for 215.2 and 109.5 hours, respectively. Of the lunar orbital data hours, 111.8 were prime data obtained after lunar module separation from the command and service module and 103.4 were degraded by the Apollo lunar surface experiments package fuel capsule (attached to the lunar module) when the spacecraft were docked. All science objectives were satisfied on both missions in spite of the following minor anomalies: During the Apollo 15 mission, the spectrometer experienced a gain shift of approximately 30 percent. Compensation for the shift was made operationally and, by the end of the mission, the spectrometer was operating in a relatively stable state near the end of its adjustment. After transearth injection, a temporary zero-reference shift occurred, causing the first eight channels of data to be grouped into one reporting channel; however, there was no loss of experiment data. This anomaly was determined to be a one-time failure of a component and no corrective action was required for the Apollo 16 instrument. Tests conducted with the qualification unit verified that the earlier problem was caused by aging of the photomultiplier tube in the gamma-ray detector assembly as a result of high cosmic ray flux rates in lunar operation. To correct for this, the Apollo 16 flight unit was subjected to high levels of radiation, thereby aging the detector photomultiplier tube. During the Apollo 16 mission, the instrument boom mechanism stalled and would not retract fully on three of five retractions. No corrective action was taken since this mechanism was not scheduled for further use.

Analyses of the experiment data from the Apollo 15 and 16 missions relating to radioactivity levels of specific lunar surface areas are in agreement. The results of these analyses (refs. 3-48 and 3-49) are summarized as follows.

a. Regions of highest activity are the western maria, followed by the Sea of Tranquillity and the Sea of Serenity. Detailed structure exists within high-radioactivity regions. High activity observed in the Fra Mauro area during the Apollo 16 mission is at approximately the same levels as those observed around Aristarchus Crater and south of Archimedes Crater during the Apollo 15 missions. These levels are also comparable to that of the soil returned from the Apollo 14 mission.

b. Radioactivity is lower and more variable in the eastern maria. Considerably lower activity is found in the far-side highlands with the eastern portion containing gamma-ray activity lower than that found in the Ocean of Storms and the Sea of Rains by an order of magnitude. The Descartes area appears to have undergone some admixing of radioactive material.

c. Preliminary data show intensity peaks that correspond to the characteristic energies of the isotopes of iron, aluminum, uranium, potassium, and thorium.

d. Discrete, celestial gamma-ray sources were detected. These sources include the Crab Nebula, Sagittarius, local clusters of galaxies, and the super cluster that contains the Virgo cluster.

### 3.3.11 X-Ray Fluorescence

Identical X-ray fluorescence experiments flown on the Apollo 15 and 16 missions were used principally for orbital mapping of the composition of the moon and, secondarily, for X-ray galactic observations during transearth coast. Lunar surface measurements involved observations of the intensity and characteristic energy distribution of the secondary or fluorescent X-rays produced by the interaction of solar X-rays with the lunar surface; astronomical observations consisted of relatively long periods of X-ray measurements of preselected galactic sources such as Cyg X-1, Sco X-1, and the galactic poles.

The X-ray fluorescence experiment equipment consisted of an X-ray detector assembly capable of detecting X-rays in the energy range from 1000 to 7000 electron volts, a solar monitor, and an X-ray processor assembly. The X-ray detector assembly, located in the scientific instrument module, detected X-rays reflected from the lunar surface or emitted by galactic X-ray sources. The solar monitor, mounted in sector IV of the service module (displaced 180° from the X-ray detector assembly), measured solar X-ray flux. The measurement of fluorescent X-ray flux from the lunar surface and the direct solar X-ray flux that produces the fluorescence yielded information on the nature of the lunar surface material.

X-ray fluorescence data were collected for totals of 186.1 hours in lunar orbit (143.9 hours of prime data and 42.2 hours of degraded data) and 52.5 hours during transearth coast. Except for minor noise problems which did not adversely affect experiment data, no equipment anomalies occurred during the two missions.

Data were collected from slightly more than 20 percent of the total lunar surface, all within a band between 30° north to 30° south latitude which included some area of overlap on the two missions. Results of Apollo 15 and 16 data analyses agree closely. Confirmation of these results by analyses of lunar surface samples indicate that the X-ray method is reliable for geochemical mapping and that it can be used to determine both the major and more subtle compositional differences between lunar maria and highland areas. The following summary results of the two experiments were obtained from references 3-50 and 3-51.

a. Apollo 15 and 16 overlap regions were located between 50° to 60° east longitude, and covered such areas as the Sea of Fertility, Smyth's Sea, Langrenus Crater, and the highlands west of Smyth's Sea (fig. 3-1). Aluminum/silicon and magnesium/silicon concentration ratios in these areas, determined from Apollo 15 and 16 data, agree within 10 percent or better. Aluminum/silicon concentration ratios range from about 0.36 to 0.60 for Apollo 15 and 0.41 to 0.61 for Apollo 16; magnesium/silicon concentration ratios range from about 0.25 to 0.21 for Apollo 15 and 0.26 to 0.20 for Apollo 16.

b. The Apollo 16 data show that for areas between 9° and 141° east longitude, aluminum/silicon concentration ratios ranged from about 0.38 to 0.71, and those for magnesium/silicon from about 0.40 to 0.16. Aluminum concentrations in the mare regions are 2 to 3 times lower than in the terra and highland regions; magnesium concentrations in the mare regions are 1.5 to 2 times higher than in the terra regions.

c. Aluminum/silicon and magnesium/silicon ratios indicate that the highlands have a widespread differentiated crust having a materials composition that varies between anorthositic gabbro and gabbroic anorthosite, with probable occurrences of anorthosite, felsite and KREEP (a material rich in potassium, rare-earth elements, and phosphorous).

d. The aluminum/silicon ratios and optical albedo values correspond closely, thus establishing that the albedo is a good guide to highland composition, specifically the plagioclase content.

e. During transearth coast, X-ray data were obtained on several discrete X-ray sources and other targets dominated by diffuse X-ray flux. The behavior of pulsating X-ray stars Cyg X-1 and Sco X-1 may be characterized by quiet periods and activity periods with durations up to a day. Ten to thirty percent changes in X-ray intensity occur in a few minutes; the intensity of Cyg X-1 can double within a day or so. This increase occurs in the three energy levels measured: 1000 to 3000 electron volts, 3000 electron volts, and 7000 electron volts.

### 3.3.12 Alpha-Particle Spectrometer

Identical alpha-particle spectrometer experiments flown on the Apollo 15 and 16 missions were designed to map differences in uranium and thorium concentrations across the lunar surface. These differences were identified by measuring the alpha-particle emission of two gaseous daughter products of uranium and thorium, radon-222 and radon-220, respectively. Because radon itself is the product of the decay of uranium and thorium, mapping of the concentrations of these two elements can be accomplished by identifying regions of high radon activity.

The experiment equipment consisted of an alpha particle sensing assembly that could detect alpha particles in the energy range from 4.7 million to 9.1 million electron volts, supporting electronics, and temperature monitors housed in the same enclosure as the X-ray fluorescence experiment assembly. Controls were provided in the command module crew station to deploy a shield protecting the experiment detectors from spacecraft contamination sources and to activate and deactivate the experiment.

Experiment data were collected for 211.6 hours in lunar orbit (160.4 hours of prime data and 51.2 hours of degraded data) and 110.3 hours during transearth coast. No equipment anomalies occurred that required remedial action; although two of the ten detectors in the Apollo 15 instrument were noisy intermittently, data validity was not affected. The following summary of results of the experiments was obtained from reference 3-52.

a. Radon emanation from the moon was positively detected although the average level is about three orders of magnitude below terrestrial levels.

b. Several interesting characteristics in the spatial and temporal distribution of lunar radon were observed. An area of relatively high radon emanation includes Aristarchus Crater, Schroter's Valley, and Cobra Head.*

c. The most conspicuous localized feature is Aristarchus Crater where the counting rate of radon-222 alpha particles is at least four times the lunar average. Grimaldi Crater appears to be the site of another localized concentration, and the edges of the great maria basins are also sites of increased activity.

d. Transient radon emanation from the moon also occurs, based on detection of large amounts of polonium-210 (a daughter product of radon-222 and a decay product of lead-210). Polonium-210 was detected in a broad area extending from west of the Sea of Crises to the Van de Graaff-Orlov Crater region; polonium-210 levels of concentrations were much higher than required to be in equilibrium with radon-222. An area having even higher concentrations of polonium-210 is located approximately 40° east longitude and centered around the Sea of Fertility.

### 3.3.13 Mass Spectrometer

Objectives of the mass spectrometer experiment, flown on the Apollo 15 and 16 missions, were to measure the composition of the lunar atmosphere and to search for active volcanism on the lunar surface. These data are important to understanding the evolution of the moon and the gas transport mechanisms in other more complete planetary exospheres. Lateral transport can be observed in an idealized form in the lunar atmosphere because gas molecules do not collide with each other but, instead, travel in ballistic trajectories to form a nearly classical exosphere after encounters with the lunar surface.

*Informal designations.

The experiment assembly consisted of the mass spectrometer and its electronic components mounted on a boom which was extended 24 feet from the scientific instrument module. The instrument was capable of measuring the abundance of particles in the 12- to 66-atomic-mass-unit range. A shelf-mounted shield to protect the spectrometer from spacecraft contamination sources when in its stowed position opened and closed automatically when the boom was extended and retracted. In addition to acquiring data while in lunar orbit, the spectrometer was operated at various intermediate boom positions for specified periods during transearth coast to determine the concentration of constituents forming the so-called contamination cloud from the command and service module. Command module crew station controls were provided to extend, retract, and jettison the boom; activate and deactivate the spectrometer; select high and low spectrometer discrimination modes and multiplier gains; and control ion source heaters and filaments.

Experiment data were collected for 134 hours in lunar orbit (127 hours of prime data and 7 hours of degraded data) for both missions, and 48 hours during the transearth portion of the Apollo 15 mission. Boom retraction anomalies occurred on both missions. On the Apollo 15 mission, the boom did not fully retract on 5 of 12 occasions. On the Apollo 16 mission, the boom never fully retracted and then stalled at the two-thirds position during final retraction for the transearth injection maneuver. Because the maneuver could not be performed with the boom extended, it was jettisoned, thereby preventing collection of data during transearth coast. In the absence of specific evidence, the incomplete retractions were assumed to have been caused by jamming of the cable in the boom housing because of stiffening during periods of cold soak. The repeated and prolonged stalling of the motors on the Apollo 16 mission caused the final failure of the boom in mid-stroke. Results of data analyses (refs. 3-53 and 3-54) are summarized as follows.

Large quantities of gas were observed in lunar orbit that could neither have orginated in lunar orbit nor resulted from spacecraft direct outgassing. The plausible source of these gases is the waste liquids periodically dumped from the spacecraft. These liquids quickly freeze, forming gases into solid particles that co-orbit the moon with the spacecraft. Subsequent evaporation produced many of the gases observed.

Data were obtained on the partial pressure of neon-20. At the 100-kilometer orbital altitude, the concentration is $(8.3 \pm 5) \times 10^3$ atoms per cubic centimeter. This value translated into the nighttime surface concentration becomes $(4.5 \pm 3) \times 10^5$ atoms per cubic centimeter. The value is lower than previous estimates by approximately a factor of 3 but is in fair agreement with the data from the Apollo 14 and 15 cold cathode ionization gages operating on the lunar surface.

### 3.3.14 Far Ultraviolet Spectrometer

The ultraviolet spectrometer was a scientific instrument module experiment flown only on the Apollo 17 mission. The purpose of this experiment was to measure the density, composition, and temperature of the lunar atmosphere. The instrument developed for this purpose was a large and highly sensitive far ultraviolet spectrometer which scanned the spectral region of 1180 to 1680 angstroms every 12 seconds with a spectral resolution of 10 angstroms. The experiment instrument was sensitive to all possible atmospheric species except argon, helium, and neon.

The most definitive information previously obtained about the density of the lunar atmosphere was with cold cathode ion gages deployed on the lunar surface on the Apollo 14 and 15 missions. Data obtained by these gages indicated that the lunar surface is an exosphere, with the lunar surface defining the exobase and, therefore, controlling the "temperature" of the atmosphere. More specifically, the data showed that there are no collisions between the atmospheric molecules or atoms and that the sources of the lunar atmosphere are the solar wind, lunar degassing, and radiogenic gases (argon and radon) formed by lunar radioactivity.

The ultraviolet spectrometer experiment was designed to optimize the observation of atomic hydrogen and xenon by spending about 45 percent of each spectral cycle scanning the resonant emissions of these two species. Optimization for xenon detection at 1470 angstroms was planned on the basis that this heaviest of the naturally occurring gases would probably be the most resilient to the loss processes that had reduced the primordial lunar atmosphere density to at least $10^{-12}$ of the density at the surface of the earth.

Far ultraviolet spectral data were collected for 80 hours in lunar orbit and for approximately 60 hours during transearth coast; a solar atmospheric observation was added in real time. All planned observations were accomplished, including those of lunar atmosphere composition and density; lunar ultraviolet albedo; solar system Lyman-alpha (1216 angstroms); ultraviolet zodiacal light; and ultraviolet spectra of the earth, several stars, and extragalactic sources. Equipment performance was nominal with two minor exceptions — failure of internal temperature sensing circuits and an unexpected high background count rate attributed to cosmic background. These problems did not impair collection of data or degrade its quality. Experiment results based on preliminary analyses are summarized as follows (ref. 3-55).

a. The present results indicate that the lunar surface concentration of atomic hydrogen is less than 10 atoms per cubic centimeter, almost three orders of magnitude less than predicted. This is consistent with the hypothesis that the solar wind protons are completely converted into hydrogen molecules at the lunar surface. The fact that xenon must be at best a minor component of the lunar atmosphere, despite its large mass, indicates that the mechanism of photoionization loss followed by acceleration in the solar wind electric field dominates over Jean's evaporative escape, at least for the heavy gases. The small concentrations of hydrogen, carbon nitrogen, oxygen, and carbon monoxide, which are photodissociation products of many gases of volcanic origin, also place severe restrictions on present levels of lunar volcanism.

b. Lunar albedo measurements confirm those made on lunar samples from the Apollo 11, 12 and 14 missions.

c. Information was obtained on ultraviolet zodiacal light emissions from the inner solar atmosphere. These data generally support the ultraviolet zodiacal light observations by Orbiting Astronomical Observatory 2.

d. During transearth coast, data were collected on stellar and extragalactic sources, and a general ultraviolet survey of the sky was conducted. Preliminary analysis of the spectra of isolated bright stars demonstrates that significant data were obtained. The observed ultraviolet spectral distributions agree with previous observations and provide the most precise measurement of the absolute ultraviolet brightness obtained to date.

### 3.3.15 Lunar Mission Photography From the Command and Service Module

Photographs of the lunar surface were taken from the command module on the Apollo 8 mission primarily for geodetic and operational purposes. The principal objectives were to obtain overlapping or stereoscopic-strip photographs, to photograph specific targets of opportunity, and to photograph a potential landing site through the sextant.

Approximately 90 percent of the objectives were met despite curtailment of photographic activities toward the end of the lunar orbit period because of crew fatigue and spacecraft operational requirements. The results were as follows:

a. Excellent coverage was obtained of selected areas on the far side of the moon complementing near-side photographs taken during the Lunar Orbiter series. Photographs were taken through the entire range of sun angles, and revealed albedo variations not previously detected as well as many bright-rayed craters ringed with high-albedo material.

b. Vertical and oblique stereoscopic photographs between terminators were obtained with the 70-millimeter camera from about 150° west longitude to 60° east longitude. Sufficient detail was available to permit photographic reconstruction of the lunar surface.

c. Of 51 planned targets of opportunity using the 70-millimeter electric camera, time permitted photography of only 31. The targets were selected to enhance knowledge of specific features or to provide broad coverage of areas not adequately covered by Lunar Orbiter photographs.

d. Photography using the 16-millimeter data acquisition camera in conjunction with the sextant was performed over the proposed first lunar landing site and three control points. This photography indicated that landmark identification and tracking could readily be performed on lunar landing missions.

An analysis of the Apollo 8 photography is given in reference 3-56.

### 3.3.16 Lunar Multispectral Photography

The multispectral photography experiment was sucesssfully accomplished on the Apollo 12 mission. Its purpose was to obtain lunar vertical strip photographs in the blue, red, and infrared portions of the optical spectrum. Equipment consisted of an array of four 70-millimeter electric cameras with 80-millimeter lenses, three to satisfy experiment objectives and a fourth, with green filter, for operational purposes.

In addition to photographs of three planned targets of opportunity, continuous vertical strip photographs were obtained over the lunar surface from 118° east to 14° west longitude. The number of photographs obtained by each of the red-, green-, and blue-filtered cameras totaled 142, and the number of photographs taken by the infrared camera was 105. These photographs provided the first high-resolution (about 30 meters) look at subtle color variations on the lunar surface and the first study of color behavior at and near the point directly opposite the sun (zero phase). The experiment demonstrated the feasibility of multispectral photography and methods used to display color contrast (ref. 3-57).

### 3.3.17 Candidate Exploration Sites Photography

This detailed objective was accomplished on the Apollo 12 and Apollo 14 missions. Photographic tasks were intended to provide data for evaluating potential sites for follow-on lunar landing missions. Primary targets on Apollo 12 were three potential landing sites: Fra Mauro, Descartes, and Lalande. Although a malfunctioning film magazine prevented accomplishment of all desired photography, mandatory requirements were satisfied. These included the following: terminator-to-terminator stereoscopic coverage over three sites using the 70-millimeter electric camera with an 80-millimeter lens, and concurrent landmark tracking with the 16-millimeter data acquisition camera through the command and service module sextant; high-resolution photography of the three sites with the 70-millimeter electric camera with a 500-millimeter lens; and medium-resolution photography of other interesting areas such as Davy Rille with the 70-millimeter electric camera and 250-millimeter lens.

The primary photographic target for Apollo 14 was the area of Descartes Crater, the tentative landing site for Apollo 16. A main objective was to obtain high-resolution photographs of Descartes at both high and low altitudes using the lunar topographic camera. This objective was not completely satisfied because of improper operation of the lunar topographic camera. As a contingency measure, the 70-millimeter camera with a 500-millimeter lens was used to obtain high-resolution photographs of the Descartes area. Stereoscopic coverage of the area was also accomplished, although no camera shutter-open telemetry data were obtained because the S-band high-gain antenna did not operate properly.

### 3.3.18 Selenodetic Reference Point Update

The detailed objective of obtaining landmark tracking photographs for use in updating selenodetic reference points was successfully accomplished on the Apollo 12 and Apollo 14 missions. Lunar landmark tracking targets included the crater Lansberg A on the Apollo 12 mission and 11 landmarks on the Apollo 14 mission, ranging from 141° east longitude to 40° west longitude; major landmarks were the craters Daguerre 66, Dollond E, Mosting A, Enke E, and Ansgarius N. Landmark photographs were taken through the command and service module sextant using the 16-millimeter data acquisition camera; supporting photographs were taken with the 70-millimeter electric camera with an 80-millimeter lens.

### 3.3.19 Transearth Lunar Photography

Assigned to the Apollo 14 mission, the transearth lunar photography detailed objective was intended to provide photographic coverage of large areas on the far side and eastern limb of the moon. These photographs were to be obtained for use in extending selenodetic control and improving lunar maps. Both the 70-millimeter electric camera and the lunar topographic camera were scheduled for use; however, the lunar topographic camera malfunctioned in lunar orbit as discussed in section 3.3.17, and only the 70-millimeter camera was used. Both the 80- and 250-millimeter lenses were used with the 70-millimeter camera to photograph the visible disk of the moon after transearth injection. Features shown at high latitudes in these photographs were then related to features at lower latitudes which appeared in landmark tracking and stereoscopic photographs.

### 3.3.20 Service Module Orbital Photographic Tasks

Service module orbital photographic tasks were accomplished on the final three Apollo missions. The objectives of these tasks were to provide a data package consisting of tracking data, terrain photography, stellar photography, and altimetry. Tracking data essentially relate the spacecraft to an earth coordinate system. Terrain photography gives the relationship of the lunar surface to the spacecraft. In turn, the relationships between the lunar surface, lunar coordinate system, and earth coordinate system can be determined, yielding refined information about the lunar ephemeris with respect to the earth coordinate system. Terrain photography is also used in triangulation, an operation in which the geometry of all photographs taken on one or more missions can be integrated into a single unified coordinate system with a precision of about 20 meters in all three axes. Stellar photography, synchronized with metric photography of the lunar surface, relates the lunar and celestial coordinate systems and gives refined information about the lunar rotation rates, the orientation of its axis with respect to the celestial coordinate system, and its physical librations. Stellar photographs also permit the attitude of each terrain photograph to be determined independently so that lunar surface photographs can be related more precisely. Altimetry data, obtained from the command and service module in lunar orbit, gives a profile of the subtrack on the lunar surface as well as distance measurements of lunar surface features appearing in stereoscopic photographs; the altitude data allow photographs to be tied together rigidly.

Service module orbital photographic tasks involved operation of a panoramic camera, a mapping camera, and a laser altimeter. Instrument operation, anomalies, and the results of photographic tasks are summarized in the following paragraphs.

a. Panoramic camera photography. The panoramic camera was an adaptation of a military panoramic reconnaissance camera designed for high-altitude applications. From an altitude of 60 nautical miles, the camera covered a swath about 300 kilometers wide on the lunar surface, and provided photographs with a resolution of 1 to 2 meters. Panoramic photographs, in conjunction with 70-millimeter still camera photographs, were used for detailed photointerpretive studies. After rectification, panoramic photographs were also used for the production of large-scale topographic maps of landing sites and special features such as rilles, domes, and craters. Figures 3-9, 3-10 and 3-12 are examples of photographs taken with the panoramic camera.

The panoramic camera was flown successfully on the Apollo 15, 16, and 17 missions and produced outstanding photography of lunar features of very high resolution in both stereographic and monographic modes. On each of these missions, the lunar module could be seen in photographs of the landing areas and, in some instances, soil disturbances caused by the lunar roving vehicle and foot traffic could be seen. A total of 4697 photographs was recorded from these three missions. The areas of coverage are identified in references 3-58, 3-59, and 3-60.

The areas photographed on Apollo 15 included the Hadley Rille landing site, several areas being considered as the Apollo 17 landing site, the Apollo 15 lunar module ascent stage impact point, near-terminator areas, and other areas of general coverage. About 12 percent of the lunar surface was photographed. Anomalous operation of the velocity/altitude sensor was indicated on the first Apollo 15 panoramic camera pass on revolution 4 and on subsequent passes; however, good photographs were obtained over all critical areas and less than 1 percent of the total film exposed was seriously degraded by the sensor malfunction.

The velocity/altitude sensor measured the angular rate of travel of the spacecraft relative to the lunar surface. The sensor output was used to control the cycling rate of the camera, the forward motion compensation, and the exposure. The sensor normally operated in the range of 45 to 80 miles altitude. If, at any time, the indicated velocity/altitude was out of this range, the sensor automatically reset to the nominal value of 60 miles. The sensor operated properly for brief periods of time, but would drift off-scale high (saturate) and then reset to the nominal value corresponding to a 60-mile altitude. The results of tests, coupled with analyses of the basic sensor design, indicated that the problem was related to the optical signal-to-noise ratio. The remaining flight hardware was modified to improve this ratio.

Apollo 16 panoramic camera photography increased lunar surface coverage to about 15 percent, and included the Descartes landing area and prime targets at King Crater and in the Fra Mauro region. In addition, photographs of the lunar surface were obtained after transearth injection. During the mission, camera operation was stopped when an abnormal bus voltage condition was observed; subsequent inspection revealed that the condition was due to the spacecraft configuration

and not to a camera problem. Photography was rescheduled to obtain photographs lost while the camera was stopped. In addition to this anomaly, the camera exposure sensor consistently read lower light levels than were present. Postflight analysis indicated that frames taken about 25° away from the terminator were overexposed by 1-1/2 to 2 f-stops. To prevent recurrence of the anomaly on the Apollo 17 mission, sensor output voltage limits were added to preflight test procedures. A special process used to develop overexposed portions of film rolls compensated for the sensor problem. Task objectives were satisfied by the excellent quality photographs that were obtained.

Panoramic camera photographs obtained on the Apollo 17 mission increased total coverage of the lunar surface to approximately 20 percent. Multiple high-resolution photographs were obtained of the Taurus-Littrow landing site and of regions east and west of the areas photographed during the Apollo 15 and 16 missions. Photographs of the moon were also taken after transearth injection. The camera operated satisfactorily throughout the mission until the stereo drive motor failed just before the final photographic pass in lunar orbit; although some stereoscopic photography was lost and resulting monographic photography was degraded, mandatory photographic requirements were met.

b. Mapping camera photography. The mapping camera was designed to obtain high-quality metric photographs of the lunar surface from lunar orbit combined with time-correlated stellar photography for selenodetic/cartographic control. The camera received altitude information from a laser altimeter (discussed in the next subsection) once per frame in serial form. Timing signals were provided to the laser to permit the altitude to be obtained within 3 milliseconds of the center of exposure of the mapping camera.

Cartographic-quality photographs of all sunlit lunar surface areas overflown by the spacecraft as well as oblique photographs of large areas north and south of the groundtracks were obtained on the Apollo 15, 16, and 17 missions. Areas of coverage are identified in references 3-58, 3-59, and 3-60.

On the Apollo 15, 16, and 17 missions, the times required to extend and retract the mapping camera were considerably longer than those of preflight tests. Several corrective actions were taken, but the problem was not resolved. Although the mapping camera was left in the extended position for longer periods than planned, neither the quantity nor quality of photographic coverage was adversely affected.

Two other anomalies that occurred during the Apollo 16 mission concerned stellar camera glare shield jamming and metal chips in the film cassettes. During the extravehicular activity for film retrieval, the stellar camera lens glare shield was found in the extended position and was jammed against the service module handrail. Photographs taken from the lunar module indicated that the glare shield was properly retracted at rendezvous. As a result of this problem on the Apollo 16 mission, the Apollo 17 mapping camera drive rack was carefully realigned for proper pinion gear engagement when the camera assembly was fully deployed. The aforementioned metal chips were found during the reprocessing inspection of the Apollo 16 returned film. The chips were removed at the start of processing and caused no loss of data on the film.

Despite the problems described, photographic requirements were satisfied on all three missions.

c. Laser altimetry. The laser altimeter marked the first use of a solid-state laser in a spacecraft application. It was flown on each of the J-series missions: Apollo 15, Apollo 16, and Apollo 17.

The purposes of the laser altimeter operations were to provide a measurement of the distance from the spacecraft to the lunar surface in synchronization with each mapping camera exposure, and to provide topographic profiles for correlation with gravity anomalies obtained from tracking data.

During the first operating period on the Apollo 15 mission, the orbit was highly eccentric, causing the spacecraft to be below the laser altimeter minimum range of 40 nautical miles approximately half the time. Whenever the altitude was within the design range of the altimeter, valid data were obtained. In the second and third operating periods, the laser output began to degrade,

accompanied by a gradual decrease in the number of valid altitude measurements. A subsequent failure in the high-voltage section caused total loss of receiver sensitivity. No data were obtained during the last half of lunar orbital flight. The cause of the decreased laser output was thought to be contamination of the optical surfaces in the laser module. As a result, more stringent cleaning and assembly procedures were implemented, and a control circuit was added to sense the output and to increase the input voltage to the laser if the output decreased. The source of the high-voltage problem was verified by duplication in the laboratory. High-voltage breakdown in a vacuum relay was generating electromagnetic interference which was picked up by the receiver automatic gain control circuit. The automatic gain control circuit held the receiver at its minimum sensitivity, thereby causing loss of the return signal. The problem was corrected by removal of the relay from subsequent units.

On the Apollo 16 mission, the laser altimeter was operated for seven periods in accordance with the flight plan, as revised during the mission to accommodate a delay in the lunar module landing. The laser output again began to degrade during the second operating period but was compensated for by the control circuit which had been added after the Apollo 15 mission. During the seventh operating period, the control circuit had reached the limit of its compensation capability, and the percentage of valid data showed a marked decrease. Of the total quantity of data obtained on the illuminated side of the moon, approximately 70 percent was valid. Because reduced laser output had less effect on operation over nonilluminated areas, approximately 80 percent of the dark-side measurements was valid. The decrease in laser output during this mission was a repeat of that experienced during the Apollo 15 mission, except that the added control circuit did prolong the effective life of the altimeter. The cause of the problem was found to be contamination of the laser module optics by bearing lubricant and a decrease in flashlamp energy due to solarization of the quartz envelope. The bearings in the Q-switch rotor were changed to a type having the lubricant vacuum-impregnated into the ball retainer. The flashlamp envelope material was changed to a higher purity grade of quartz to eliminate solarization. In addition, the control circuit was modified so that its compensation was added in smaller increments.

The effectiveness of the changes implemented in the laser altimeter hardware as a result of the previously mentioned problems can be seen by performance of the instrument on the Apollo 17 mission. The number of operations that produced valid data exceeded 99 percent. No altimeter anomalies occurred during the Apollo 17 mission.

Apollo program laser altimeter data reveal that the mean radius of the moon is approximately 1738 kilometers. The data also show that the center of figure is offset from the center of mass by 2 to 4 kilometers along the earth-moon line. Additional details of the laser altimeter studies are given in references 3-61, 3-62 and 3-63.

### 3.3.21 Command Module Orbital Science Photography

The command module orbital science photography detailed objective was conducted during the Apollo 14 mission. The purpose was to obtain photographs of lunar surface areas of prime scientific interest and of specific segments of the lunar surface in earthshine and in low-level light near the terminators*.

The lunar topographic camera with an 18-inch lens was provided to obtain high-resolution (2 meters) stereoscopic photographs (with 60 percent overlap) of four lunar surface targets; the target having the highest priority was an area north of Descartes Crater, a candidate landing site for the Apollo 16 lunar module. Operation of the camera was noisy on the first of three scheduled passes, indicating a camera malfunction. An extensive postmission film development plan instituted for analysis of the two exposed 5-inch film rolls resulted in the recovery of 193 usable photographs. These photographs covered a segment of the central lunar highlands from the eastern rim of Theophilus Crater to a point northwest of Kant Crater. Two major units were included: Theophilus Crater ejecta and Kant Plateau materials.

High-resolution photographs of eight lunar surface targets were scheduled to be obtained with a 70-millimeter electric camera: three with a 500-millimeter lens, and five with a 250-millimeter lens. The 500-millimeter targets were photographed successfully, but only two of the 250-millimeter targets were obtained; photographs of the other three targets were deleted because of operational considerations. The 70-millimeter camera was also used to photograph a number of targets that had been scheduled to be photographed with the lunar topographic camera.

*Dividing line between illuminated and unilluminated lunar surface.

A sequence of photographs showing the lunar surface in earthshine and in low light levels near the terminator was accomplished successfully. A 70-millimeter electric camera with an 80-millimeter lens and a 16-millimeter data acquisition camera with an 18-millimeter lens were used. The photographic sequence started just before the command and service module crossed the sunrise terminator and continued past the terminator. Photographs covered the area located in the south-central portion of the Ocean of Storms in the vicinity of Kunowsky Crater and approximately 210 kilometers southeast of Kepler Crater. Details of the orbital science photography conducted on the Apollo 14 mission are given in reference 3-64.

### 3.3.22 Visual Observations from Lunar Orbit

Visual observations were an integral part of lunar exploration because the dynamic range and color sensitivity of the human eye cannot be matched by any one film type or sensing instrument and because, in special cases, on-the-scene interpretation of observed features or phenomena was needed. Visual observations were intended to complement photographic and other remotely sensed data obtained from lunar orbit. This detailed objective was successfully accomplished on the Apollo 15, 16, and 17 missions. The locations of many of the areas referred to in the following paragraphs may be found in figure 3-1.

The extraordinary success of the visual observations on the Apollo 15 mission proved the outstanding capabilities of man and his use in space flight. All 13 scheduled targets were observed and crew comments were relayed to earth. Targets were the craters Tsiolkovsky, Picard, Proclus, Cauchy, Littrow, Dawes, and Sulpicius Gallus; Hadley Rille; Imbrium Basin flows; the Harbinger Mountains; the Aristarchus Plateau; and areas to be observed after transearth injection. The following significant observations were made during this mission (ref. 3-65).

a. Fields of possible cinder cones were discovered on the southeast rim of the Sea of Serenity (Littrow Crater area) and on the southwest rim of the same mare basin (Sulpicius Gallus Crater area).

b. The lineated segment of the northwestern rim of Tsiolkovsky Crater on the lunar far side was interpreted as a landslide.

c. An excluded zone in the ray pattern around Proclus Crater on the west rim of the Sea of Crises was interpreted as caused by a fault system at the west rim of the crater.

d. Recognition of layering along crater walls (as opposed to terracing by faults and mass wasting by downward movement of materials along the walls) was achieved for the first time. This recognition gives a new dimension to thinking relative to the nature of the upper layers of the lunar crust.

Targets scheduled for visual observation on Apollo 16 were the farside highlands; the craters Mendeleev, King, Goddard, and Kapteyn; the Colombo highlands; the craters Isodorus-Capella; the Descartes landing site; and Alphonsus Crater. All but one of the targets were successfully observed; the Goddard target area was deleted because of time constraints. Items used to aid in observations were site graphic materials, a pair of 10-power binoculars, and a reference color wheel. The following significant observations were made (ref. 3-66).

a. The crew's first impression of the moon from lunar orbit was that of a brilliant, heavily battered, and uniformly colored body. Toward the end of lunar orbit, they felt that the detailed characteristics of units commonly mapped on the lunar near and far sides were surprisingly similar.

b. Fine scarps, generally irregular and somewhat subdued, were observed on the far side, but none was seen in the near-side highlands.

c. The Cayley Formation generally had the same appearance as large basin fill, as small patches in the bottom of the steep-sided craters, and as valley filling in the hummocky far-side highlands.

d. Mare surfaces provided the setting for the most obvious color contrasts.

e. Numerous terrace-like rims were detected along highland hills in the Sea of Clouds, the Known Sea, and the Ocean of Storms, these are interpreted as "high-water marks," representing the maximum depth of filling by mare lavas.

Nine lunar surface targets were scheduled for visual observation on Apollo 17. They were the craters Aitken, Arabia, and Copernicus; the Seas of Crises and Serenity; D-Caldera; the Taurus-Littrow landing site; Smyth's Sea; Reiner Gamma Crater; and Tsiolkovsky Crater. Four additional targets observed were Euler Hills, and the craters Gagarin, Korolev, and Pasteur. Crew aids were onboard graphic materials, a pair of 10-power binoculars, and a reference color wheel. All aids were useful except the color wheel which apparently did not include a color range comparable to actual lunar colors.

Because the Apollo 17 groundtracks repeated approximately 80 percent of the lunar surface area previously overflown on Apollo 15, much was already known about the features in question. For this reason, emphasis was placed on color tones of geologic units and details of small-scale features. Detailed descriptions of the observations are given in reference 3-67.

### 3.3.23 Gegenschein from Lunar Orbit

The Gegenschein from lunar orbit experiment was performed on the Apollo 14, 15 and 16 missions. Its purpose was to determine if a detectable accumulation of dust exists at the Moulton point of the sun-earth system and, thus, to establish whether sunlight reflected from dust particles at this location contributes significantly to the Gegenschein phenomenon. The 16-millimeter data acquisition camera with an 18-millimeter lens was used on the Apollo 14 mission, and a 35-millimeter camera with a 55-millimeter lens was used on the Apollo 15 and 16 missions.

On the Apollo 14 mission, three sets of photographs were required to meet experiment objectives. Each set consisted of two 20-second exposures and one 5-second exposure in quick succession. For the first set the camera was pointed near the antisolar direction; for the second set the camera was pointed midway between the antisolar direction and the computed direction of the Moulton point, as viewed from the moon; and for the last set the camera was pointed near the direction of the Moulton point. All requirements were satisfied. Both aiming and filming were excellent, and the experiment demonstrated that long exposures were practicable.

As planned for the Apollo 15 mission, photography of the Gegenschein and Moulton point was performed twice, and at least six exposures were obtained during each sequence. All photographs were unusable because of incorrect spacecraft attitudes resulting from errors incurred during analytical transformation of target coordinates to spacecraft attitudes. However, the operational performance of the 35-millimeter camera system, used for the first time on the Apollo 15 mission, demonstrated its feasibility for Gegenschein photography.

The Apollo 16 experiment objectives were the same as those for the Apollo 14 and 15 missions, and were accomplished satisfactorily. Ten desired exposures were obtained, five with 1-minute durations and five with 3-minute durations. Pointing accuracy and spacecraft stability were within specified limits. Photographic quality was good, and the solar radiation caused less degradation of the Apollo 16 film than that of the Apollo 14 and 15 film. Analysis of the photographs shows that the sky is definitely brighter in the antisolar direction than in the direction of the Moulton region and that much less than half the light seen on earth as the Gegenschein comes from particles lingering in the Moulton region.

### 3.3.24 Ultraviolet Photography - Earth and Moon

This photography experiment was conducted on the Apollo 15 and 16 missions. Its purpose was to obtain imagery of the earth and the moon at a series of wavelength intervals in the near-ultraviolet portion of the spectrum. Photographs of the earth were required to provide calibration data to support the study of planetary atmospheres by telescopic observations in the ultraviolet spectrum; photographs of the moon were needed to investigate short-wavelength radiation from the lunar surface. Accompanying color photographs were obtained to help interpret the ultraviolet appearance of other planets in our solar system, especially Mars and Venus.

Equipment for recording required experiment spectral data consisted of a 70-millimeter electric camera with a 105-millimeter ultraviolet transmitting lens, a spectroscopic film sensitive to the shorter wavelengths, a special command module window fitted with quartz panes to pass a large fraction of incident ultraviolet radiation, and four filters. One filter was centered at 3750 angstroms, a second at 3050 angstroms, and a third at 2600 angstroms; the fourth passed visible radiation above 4000 angstroms. The command module window was covered by a shield most of the time to limit periods of crew exposure to high ultraviolet radiation levels in direct sunlight or in light reflected from the lunar surface.

Apollo 15 photographic activity began in earth orbit when the first several sets of ultraviolet photographs were taken. During translunar coast, three sets of ultraviolet photographs recorded the spectral signature of the earth from distances of 50 000, 125 000, and 175 000 nautical miles. Lunar orbit activities included ultraviolet photography of the earth above the lunar horizon and two series of ultraviolet photographs that recorded the spectral data for lunar maria and highlands. Ultraviolet photographic activities were concluded during transearth coast by photographs of the earth taken shortly after the crew extravehicular activity to retrieve film cassettes from the service module cameras, and by two more sets of earth photographs obtained during the final 2 days before landing.

Apollo 16 ultraviolet photographs were scheduled to be obtained during translunar coast, in lunar orbit, and during transearth coast. Time constraints, unsatisfactory performance of the 2650-angstrom bandpass filter, and lunar image centering problems resulted in the loss of some data. However, 66 high-quality images of the earth and moon were recorded at varying distances. Four sets of ultraviolet photographs of the earth and one set of the moon were exposed at scheduled times during translunar coast. During lunar orbit, spectral data of highland terrain near the Descartes landing site were recorded. A sequence of ultraviolet photographs of the moon shortly after transearth injection and another of ultraviolet earth photographs taken a few hours before landing completed experiment activities.

### 3.3.25 Dim-Light Photography

Primary objectives of the dim-light photography detailed objective, accomplished on the Apollo 14 mission, were to obtain photographs of diffuse galactic light, zodiacal light, and lunar libration region L4; also, the dark side of the earth was photographed through the sextant. Many of these observations were of the nature of an operational test to determine the feasibility of obtaining photographs of astronomical phenomena from the command and service module using a 16-millimeter data acquisition camera. A total of 56 exposures were made: 13 of galactic light, 30 of zodiacal light, 4 of lunar libration region L4, and 9 of the dark side of the earth through the sextant.

Zodiacal light could be seen with the unaided eye on about 15 photographs; galactic light and lunar libration photographs, though faint, were usable. Earth dark-side photographs were unusable because scenes were obscured by scattered light from the sextant optics, from sunlit areas of the earth, and perhaps from portions of the docked lunar module during translunar coast.

### 3.3.26 Command Module Photographic Tasks

The command module photographic tasks were performed on the Apollo 15, 16, and 17 missions. The portions of this detailed objective that supported astronomy investigations involved photography of the solar corona, zodiacal light, lunar surface areas in earthshine and in low light levels near the terminator, galactic light, and lunar libration region L4. Also the dark side of the earth and selected star fields were photographed through the sextant. Specific tasks assigned and cameras used included the following.

| Task | Cameras, mm |
|---|---|
| Observations of solar corona | 70 and 16 |
| Moon during eclipse by the earth | 70 and 35 |
| Star fields through the command module sextant | 16 |
| Lunar libration region L4 | 16 and 35 |
| Zodiacal light | 16 and 35 |
| Specific segments of lunar surface: | |
| In earthshine | 35 |
| Near terminator | 70 |
| Galactic light | 16 and 35 |
| Dark side of the earth through command module sextant | 16 |

Command module photographic tasks scheduled for the Apollo 15 mission were designed to continue and expand those accomplished on the Apollo 14 mission. Photographs of star fields through the sextant were obtained during translunar and transearth coast periods; solar corona calibration photographs and a sequence of photographs documenting the lunar eclipse were taken during transearth coast. All other photographic objectives were achieved in lunar orbit.

Objectives of the command module photographic tasks for the Apollo 16 mission were to obtain photographs of the diffuse galactic light of celestial subjects, the solar corona, the zodiacal light, and specific segments of the lunar surface in earthshine and in low light levels near the terminator. These objectives were a continuation of the diffuse galactic light photographic task accomplished on the Apollo 14 mission and the dim-light command module photographic tasks performed during the Apollo 15 mission. Primarily because of time constraints, photographic objectives were not fully satisfied: only two of the four scheduled solar corona photographic sequences were completed, and lunar earthshine photography was not accomplished, although some photographs were obtained over areas less desirable than those planned. Other requirements were satisfied by photographs taken of lunar surface areas in low light levels near the terminator and two 5-minute exposures of diffuse galactic light in the Gum Nebula.

Apollo 17 command module photographic task objectives, a repetition of those for the Apollo 15 and 16 missions, were to obtain photographs of the solar corona, zodiacal light, and specific segments of the lunar surface in earthshine and areas in low light levels near the terminator. The first of two planned solar corona photographic sequences was successfully accomplished, but the second was omitted because of an extended crew sleep period. Seven photographs provided data on the east limb of the sun; two coronal streamers are evident in photographs taken just before sunrise, one lying nearly along the ecliptic. Exposure durations were as planned, permitting good photometry using preflight calibrations.

Zodiacal light, extending eastward from the lunar-occulted sun, was recorded in three separate series of photographs. A red filter was used for the first series, a blue filter for the second series, and a polarizing filter for the third series. When corresponding red and blue images were compared, the inner zodiacal light within about 15° of the sun showed a stronger red component in and close to the ecliptic plane, whereas inner zodiacal light well out of the ecliptic plane and almost all of the outer zodiacal light produced a stronger blue component; although a similar visual comparison of equivalent polaroid frames did not show any obvious variation in features, excellent isophote maps can be made for the most sensitive comparison necessary in the future.

High-quality photographs of lunar surface targets in earthshine were obtained. These targets were the craters Eratosthenes, Copernicus, Reiner Gamma, Riccioli, and Orientale. Other crew-option targets that were photographed using blue, red, and polarization filters included Tsiolkovsky Crater, the Sea of Rains, and the Taurus-Littrow landing site. Photographs of lunar surface areas in low light levels near the terminator were of excellent quality, particularly those located in the near-side mare areas.

## 3.4 EARTH RESOURCES PHOTOGRAPHY

Earth resources photography included synoptic terrain photography and synoptic weather photography, performed on Apollo 7, and multispectral terrain photography, performed on Apollo 9. The purposes of these experiments were to obtain high-quality color, panchromatic, and multispectral photographs of selected land and ocean areas of the earth and of clouds and other weather phenomena. Data from these photographs supplemented existing earth resources data, thus enhancing meteorological and ecological knowledge.

Photographs for all experiments were obtained by using modified 70-millimeter electric cameras. For the multispectral terrain photography experiment, an array of four electric cameras was used with four film/filter combinations: Panatomic-X film with red and green filters, infrared black-and-white film with a red filter, and color infrared film with a Wratten 15 filter.

### 3.4.1 Synoptic Terrain Photography

More than 500 synoptic terrain photographs were obtained during the Apollo 7 mission. Of these, about 200 satisfied experiment objectives. Photographs obtained were used to support studies of the origin of the Carolina bays in the United States, wind erosion in desert regions, coastal morphology, and the origin of the African rift valley. Near-vertical, high-sun-angle photographs of Baja California, other parts of Mexico, and parts of the Middle East were useful for geologic studies. Photographs of New Orleans, Louisiana, and Houston, Texas, were generally better for geographic urban studies than those available from previous programs. Areas of oceanographic interest, particularly islands in the Pacific Ocean, were photographed for the first time. In addition, the first extensive photographic coverage of northern Chile, Australia, and other areas was obtained.

### 3.4.2 Synoptic Weather Photography

Of the approximately 500 synoptic weather photographs obtained during the Apollo 7 mission, 300 showed clouds and other items of meteorological interest, and 80 contained features of oceanographic interest. Categories considered worthy of additional interest included weather systems such as tropical storm; winds and their effects on clouds; ocean surfaces; underwater zones of Australian reefs, the Pacific Atolls, the Bahama Islands, and Cuba; landform effects; climatic zones; and hydrology. Of particular interest were photographs of Hurrican Gladys and Typhoon Gloria, photographed on October 17 and October 20, 1968, respectively.

### 3.4.3 Multispectral Terrain Photography

Photographic targets for the multispectral terrain photography experiment were primarily in the United States and Mexico. Coast-to-coast coverage of parts of the United States and parts of southern Mexico and Central America was accomplished; partial photographic sets were obtained of test areas specifically designated for oceanographic and meteorological studies. Typical sites were Phoenix and Yuma, Arizona; Houston, Texas; Los Angeles, California; and Mexico City, Mexico. Secondary targets were located in Africa. A total of 584 frames were exposed by all four cameras, yielding 127 complete photographic sets.

Except for some cloud cover, the quality of the multispectral terrain photographs ranged from very good to excellent. Photographic coverage of clouds and specific meteorological phenomena had greater value for meteorological application than photographs obtained during any previous manned orbital mission. Of the four film/filter configurations used, the color infrared

film/Wratten 15 filter combination provided the best photographic information and resolution, and rapid discrimination was possible between features such as water, types of vegetation, and rocks or soil. Of the three black-and-white film/filter combinations, Panatomic-X film/red filter produced the best tone differentiation, contrast, and resolution; infrared film/red filter provided the best discrimination between types of vegetation and provided the ability to reconstitute color imagery; and Panatomic-X film/green filter, the least effective of the four film/filter combinations, yielded a lower variation in shades of gray and less resolution than those obtained with the Panatomic-X film/red filter.

## 3.5 BIOMEDICAL EXPERIMENTS

Three inflight biology experiments were conducted during the Apollo series of space flights. Each study investigated the effects of space flight, including ambient radiation, on one or more species of living organisms. A brief and general description of each experiment with a synopsis of previously reported observations is included.

### 3.5.1 Microbial Response to Space Environment

The objectives of the microbial response to space environment experiment were twofold. The first objective was to establish a statistically valid relationship between space flight and the viability of several different microbial systems. A second, more extensive objective was to analyze accurately the effect of space flight conditions on the rate of mutations and developmental changes in different micro-organisms.

The experiment systems are summarized in table 3-VIII. In most cases, the studied phenomena represent well-known model systems that can be directly correlated with disease or other medically important conditions that could affect the health of future astronauts. Investigators were invited to study those phenomena within their area of expertise and to conduct critical investigations in their laboratories. This method allowed many individual studies to be conducted in a coordinated manner and permitted a variety of micro-organism species to be housed within a single piece of flight hardware.

Each investigator selected a species of micro-organism that was nonpathogenic to man (to avoid possible contamination of the crew), that was well characterized relative to the phenomenon to be studied, that was well suited to simple and rapid screening tests, and that was compatible with the unique environment of the flight hardware. Dose-response studies were made possible by providing a mechanism to expose test systems to the full light of space or to components of the solar ultraviolet spectrum at peak wavelengths of 254, 280, and 300 nanometers, over a range of energy values.

During the Apollo 16 transearth coast extravehicular activity, the experiment hardware was removed from the crew compartment and affixed to the distal end of the television boom, which was then attached to the handle of the opened hatch door (fig. 3-31). Following a small command module attitude adjustment, the experiment was opened to expose the test systems to the direct rays of the sun. After exactly 10 minutes, the device was closed, brought back into the command module, and subsequently returned to earth for analysis.

A summary of the preliminary results of each microbial system is presented in the following paragraphs.

*Aeromonas proteolytica* produces an endopeptidase that can cause intracutaneous hemorrhage and necrosis in laboratory animals and another factor that can hemolyze human erythrocytes. This microbe was retained in fluid suspension and was exposed to all wavelengths of ultraviolet irradiation. Comparisons of survivors recovered from the experimental and control units indicate no significant differences in viability. The more sensitive characteristics of endopeptidase and hemolysin production are still being investigated.

TABLE 3-VIII.- MICROBIAL RESPONSE TO SPACE ENVIRONMENT EXPERIMENT SYSTEM COMPONENTS

| Phenomenon studied | Assay system | Micro-organism |
|---|---|---|
| Biological Components | | |
| Lipolytic α toxin production<br>Deforming β toxin production<br>Fatal δ toxin production | Lytic zone on agar<br>*Sarcina flava* and house fly<br>Silk worm and crystal assay | *Bacillus thuringiensis* |
| Infectivity | Mouse | *Nematospiroides dubius* |
| Hemorrhagic factor production<br>Hemolytic enzyme procuction | Guinea pig and hemoglobin<br>Human erythrocytes | *Aeronmonas proteolytica* |
| Genome alteration | Spore production | *Bacillus subtilis* spores, strains HA 101 (59) and HA 101 (59) F |
| UV and vacuum sensitivity | Colony formation | *Bacillus subtilis* spores, strain 168 |
| Bacteria phage infectivity | Host lysis | *Escherichia coli* (T-7 phage) |
| Cellulolytic activity | Cloth fibers | *Chaetomium globosum* |
| Animal tissue invasion | Human hair | *Trichophyton terrestre* |
| Drug sensitivity | Antibiotic sensitivity in agar | *Rhodotorula rubra*<br>*Saccharomyces cerivisiae* |
| Dosimetry Components | | |
| High-energy multi-charged particles | Passive nuclear track detectors | Lexan<br>Cellulose nitrate<br>Photographic emulsion<br>Silver chloride |
| Ultraviolet light | Passive dosimeters | Potassium ferrioxalate actinometry<br>Photographic emulsion |
| Penetration of galactic irradiation | Thermoluminescent dosimeters | Lithium fluoride |

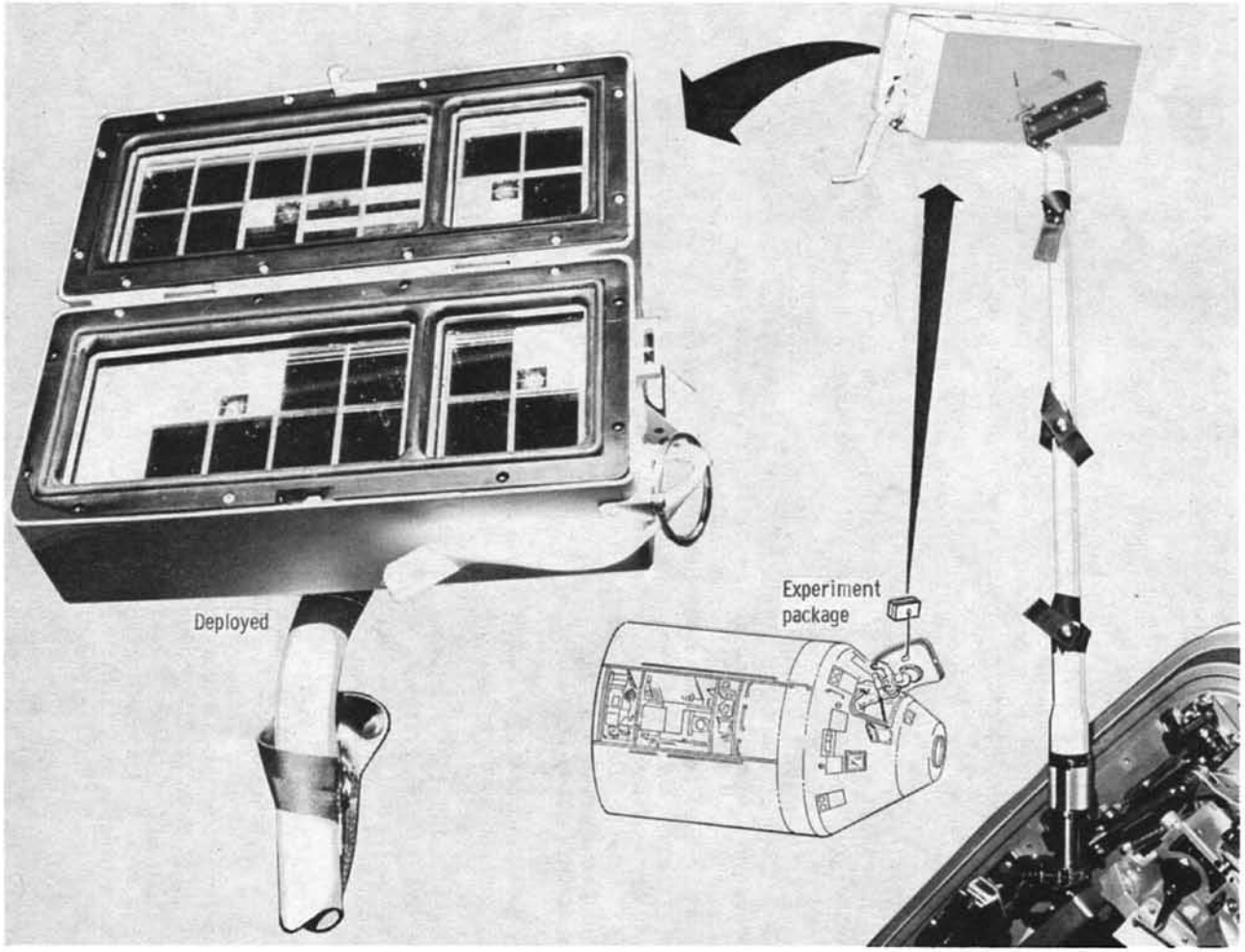


Figure 3-31. - Hardware for the microbial response in space environment experiment.

Two species of filamentous fungi, *Trichophyton terrestre* and *Chaetomium globosum*, were selected because these species are active against human hair and cloth fibers, respectively. The two species of yeasts, *Rhodotorula rubra* and *Saccharomyces cerevisiae*, were included because they may be used as biological indicators in several assay procedures. Detailed results of analyses have not yet been released.

Two different investigative groups evaluated different strains of *Bacillus subtilis*. Spores of *B. subtilis* strain 168 were exposed in monolayers to space vacuum and/or to ultraviolet irradiation at a peak wavelength of 254 nanometers. Detailed analyses of recoverable colony-forming units demonstrate that neither space vacuum nor ultraviolet irradiation in space nor a combination of these factors affected the survival of this strain in a manner discernible from the ground control and ground test subjects.

Spores of *B. subtilis* strains HA 101 (59) and HA 101 (59) F were exposed to the space flight environment in aqueous suspensions and in dry layers. Spores of these strains were selected because of their known stability in extreme environments. As with strain 168, comparisons of nonirradiated flight cells with ground controls as yet have failed to demonstrate any space-flight-mediated effect.

The species *Bacillus thuringiensis* var. *thuringiensis* was chosen for the experiment because it produces a lipolytic $\alpha$ toxin, a deforming $\beta$ toxin, and a crystalline $\delta$ toxin, and because it has been widely used as a biological insecticide. As with the other bacilli, the space-flight conditions appear to have had no effect on cell viability as measured by surviving colony-forming units.

Survival studies of the T-7 bacteriophage of *Escherichia coli* were performed in an attempt to relate the present experiment to the space-flight-mediated effects reported by Russian scientists for *E. coli* phage specimens flown on numerous manned flights. Rather than the T-1 or K-12 ($\lambda$) phage commonly used on the Russian flights, the simpler and more stable T-7 phage was chosen for this study because this phage was expected to be more resistant to the rigors of space flight and thus would be a better ultraviolet test subject. Early calculations support this hypothesis because large losses in the flight subjects, as compared to the ground controls, are not indicated. Critical comparisons of flight and control test samples demonstrate no discernible space-flight-mediated antagonism or synergism.

The nematode *Nematospiroides dubius* was chosen for study because this complex multicellular organism has been successfully cultured in vitro from the egg to the third-stage infective larvae, is pathogenic to laboratory mice but not to humans, and is quite insensitive to the special holding conditions of the flight hardware. A comparison of nonirradiated flight and ground control subjects revealed no differences in survival, infectivity in mice, formation of adults, or subsequent egg productions. However, data analyses indicate that the space-flight environment (excluding ultraviolet irradiation and vacuum) profoundly affected the ability of the resulting eggs to develop to infective larvae.

Galactic irradiation measurements were conducted in response to current concern for the effect of high-energy multicharged particles on biological systems. Several systems including lithium fluoride, cellulose nitrate, Lexan, Ilford G5, and silver chloride crystals were used in the flight hardware and ground controls. The mean dose within the flight hardware was 0.48 ±0.02 rad with a range of 0.44 to 0.51 rad. This dose represents a total absorption of 48 ±2 ergs of ionizing energy per gram within the biological systems. Doses to the crewmen were slightly higher, ranging from 0.48 to 0.54 rad with a mean of 0.51 ±0.02 rad. Analyses of the Lexan and cellulose nitrate tracks and lithium fluoride values indicate that the microbial response hardware was better shielded during the flight than were either the Apollo light flash moving emulsion detector, the crew passive dosimeters, or the biostack experiment.

In conclusion, none of the available data indicate space-flight-mediated changes in cell viability or recovery. One significant observation is that *N. dubius* eggs produced after mice had been infected with space-flown *N. dubius* larvae demonstrated a significant decrease in hatchability when compared to identical ground controls. Except for the fact that the Apollo 16 flight larvae had been on board the command module, treatment of the flown larvae and ground control larvae was the same; neither had been exposed to ultraviolet irradiation.

### 3.5.2 Biostack Experiment

The biostack experiment studied the biologic effects of individual heavy nuclei of galactic cosmic radiation during space flight. A consortium of European scientists and engineers proposed and conducted the experiment. Although officially sponsored by the German Bundesministerium fur Bildung und Wissenschaft, the biostack was a representative segment of the scientific program of the Council of Europe designed to promote European research on the effects of high-energy/high-atomic-number particles of galactic cosmic radiation on a broad spectrum of biologic systems, from the molecular to the highly organized and developed forms of life. Two experiments were conducted - biostack I on Apollo 16 and biostack II on Apollo 17. The experiment approach was identical on both missions, and only a slight change in exposed biologic material was made between the two flights.

The objectives of the biostack experiment were achieved by using a hermetically sealed aluminum container (fig. 3-32) that contained a series of monolayers of biologic material sandwiched between several different types of detectors of galactic cosmic radiation particles. The biologic effects of high-energy particles under consideration included the following.

a. Physicochemical inactivation of molecular and cellular function

b. Radiation-induced mutations leading to genetic changes of biologic significance

c. Modification of the growth and development of tissues

d. Radiation-induced damage to nuclei and other subcellular functions

The biologically passive or dormant systems used in the biostack experiments were alternately stacked between physical detectors of high-energy/high-atomic-number particle tracks, which included nuclear emulsions (Ilford K2 and K5) and plastics (cellulose nitrate and polycarbonate), as well as lithium fluoride thermoluminescent (radiation) dosimeters located at the top and bottom of the biostack. A typical configuration of biologic layers and detectors is illustrated schematically in figure 3-33. This arrangement was used because the configuration permitted correlation of the incident high-energy/high-atomic-number particle with its interaction with the "hit" biologic material and the physicochemical characteristics and properties of the particle. This characterization of a specific particle identified with a specific biologic hit is critical in the evaluation of high-energy effects.

The following biologic system were included in biostack I on board Apollo 16.

a. Spores or inactive forms of the bacterium *Bacillus subtilis*

b. Dry seeds of *Arabidopsis thaliana*, commonly known as the European watercress

c. Radiculae or embryos of the bean *Vicia faba*

d. Encysted eggs of the brine shrimp *Artemia salina*

The systems in biostack II on board Apollo 17 included, once again, *Bacillus subtilis* spores and *Artemia salina* eggs. *Vicia faba* and *Arabidopsis thaliana* were deleted, and cysts of the protozoan *Colpoda cuculus*, eggs of the flour beetle *Tribolium confusum*, and eggs of the grasshopper *Carausius morosus* were added.

### 3.5.3 Biological Cosmic Radiation Experiment

The biological cosmic radiation experiment was a passive experiment intended to determine if heavy particles of galactic cosmic radiation have the capability to inactivate nondividing cells such as those in the brain and the retina of the eye. The experiment was conceived as a logical extension of earlier biological cosmic radiation studies that used balloon-borne animals. In this experiment, five *perognathus longimembris* (little pocket mice) were exposed to the galactic cosmic radiation encountered during the Apollo 17 lunar mission. This species was selected because the adult animal is small and these mice do not require water. A radiation dosimeter was implanted underneath the scalp of each animal to permit correlation of tissue lesions with the passage of radiation particles into the brain.

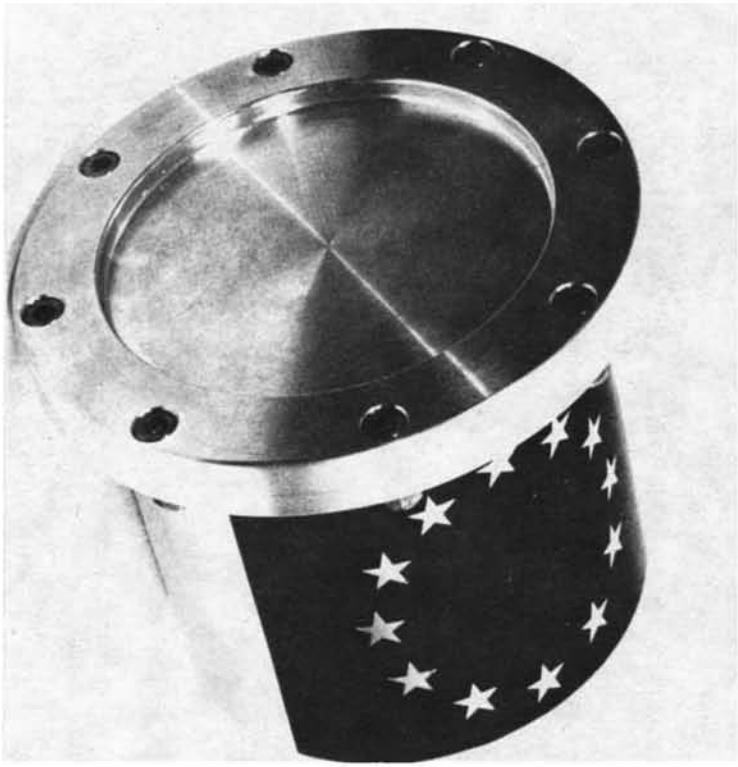

(a) Hermetically sealed.

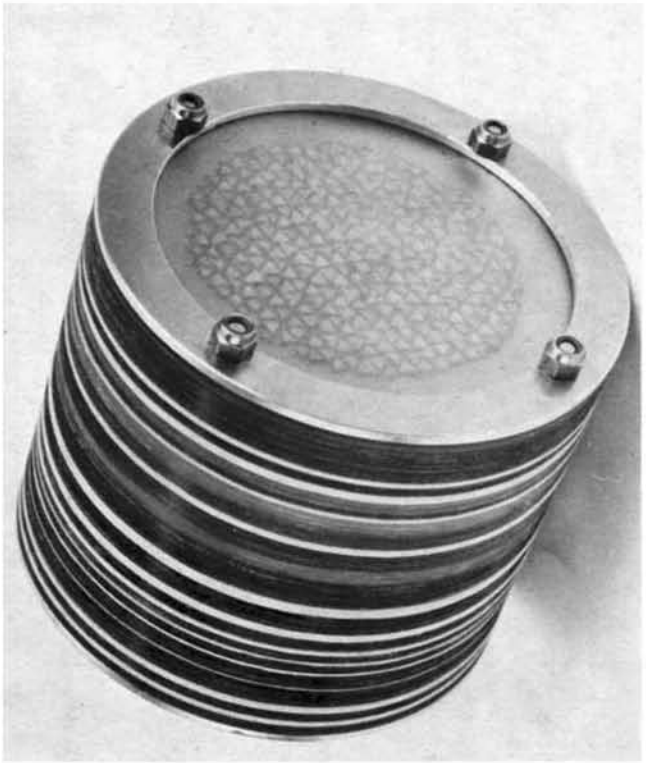

(b) Monolayers of biologic materials and detectors of galactic cosmic radiation particles.

Figure 3-32. - The biostack.

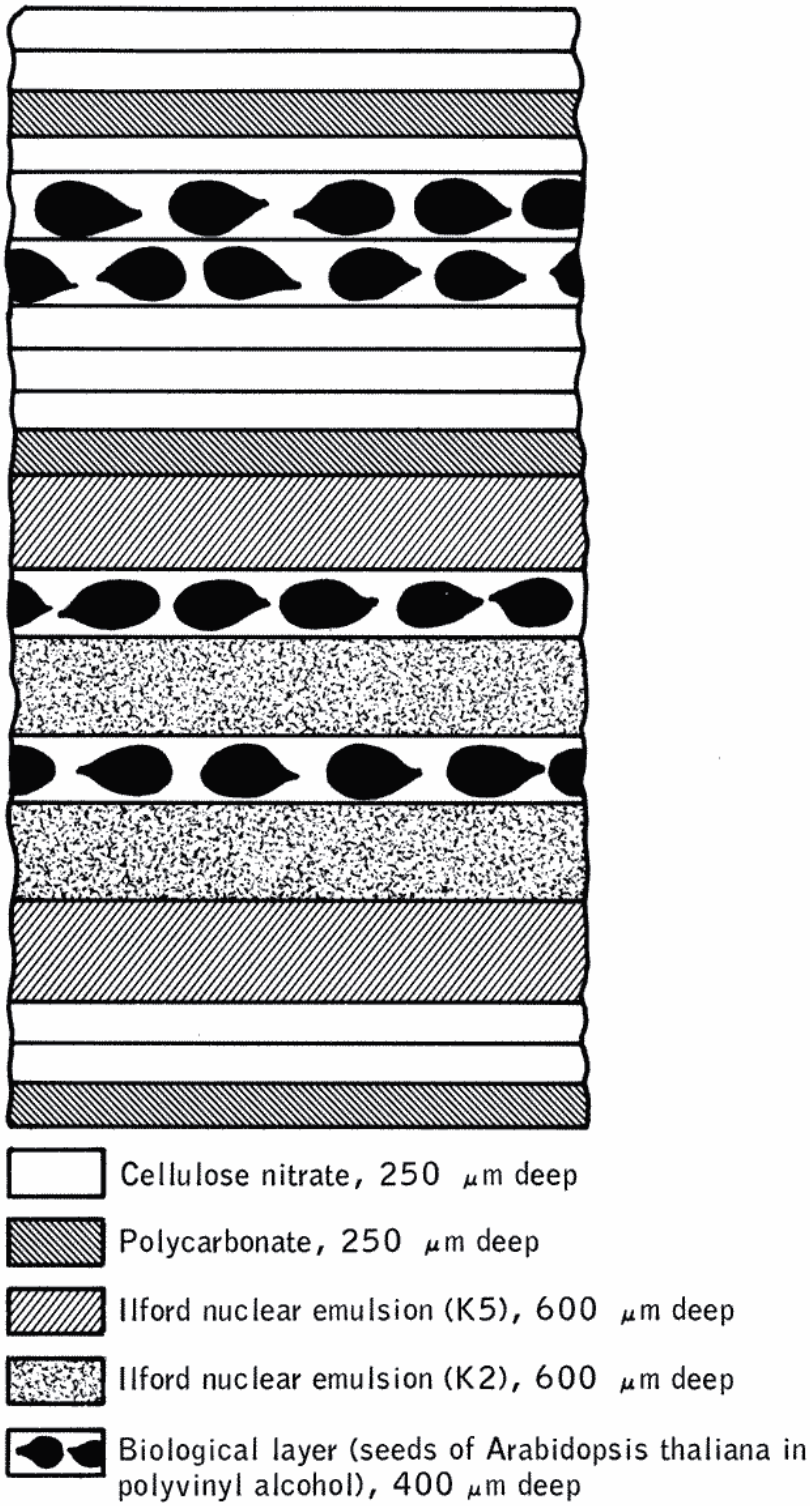


Figure 3-33.- Typical configuration of biologic layers and detectors in the biostack.

The hardware consisted of a hermetically sealed, cylindrical aluminum canister (approximately 13.5 inches long and 7 inches in diameter) that contained seven perforated, cylindrical metal tubes (fig. 3-34). Attached to one end of the canister were redundant pressure relief valves and two manually controlled purge valves. Six of the seven tubes were arranged around the inside wall of the canister. Five of these 1-inch-diameter aluminum tubes contained a mouse and its food supply. The sixth mouse tube was flown empty. The seventh tube, made of stainless steel, was centrally located in the six-tube circular arrangement. This center tube contained potassium superoxide granules for life support and operated by converting the carbon dioxide from the mice into oxygen. Two self-recording temperature sensors were located in two of the mouse tube end caps. A separate radiation dosimeter was located in the stowage locker adjacent to the experiment hardware.

The experiment was secured in the command module with its longitudinal axis perpendicular to the thrust axis during launch and recovery. The mice were loaded into the hardware approximately 4 days before the scheduled launch, and the experiment hardware was stowed in the command module approximately 36 hours before launch. The hardware was removed from the command module approximately 3 hours after landing and delivered to the Principal Investigator on American Samoa. The initial postflight processing of the flight mice was accomplished at a laboratory established for that purpose on American Samoa.

Four mice survived the Apollo 17 mission. The survivors appeared to be physiologically normal and displayed no behavioral manifestations indicative of any untoward effects of space flight. The death of the fifth mouse did not appear to be related to space flight stresses. The tissues of the mice are in pathological and histochemical analyses for any evidence of interaction between the tissues and heavy cosmic particles and subsequent biological damage. The subscalp dosimeters indicated penetration by a significant number of cosmic particles. Performance of the potassium superoxide granules in providing life support oxygen was considered to be normal.

## 3.6 INFLIGHT DEMONSTRATIONS

Inflight demonstrations were small carry-on experiments operated by several crews during translunar or transearth coast. The purpose of these experiments was to demonstrate the effects of near-zero gravity on various phenomena and processes. Demonstrations of fluid electrophoresis, liquid transfer, heat flow and convection, and composite casting were conducted on the Apollo 14 mission. In addition, another fluid electrophoresis demonstration was conducted on Apollo 16, and the heat flow and convection demonstration was repeated on Apollo 17. The composite casting demonstration was scheduled to be conducted again on the Apollo 15 mission but was canceled because of a hardware malfunction. Each demonstration is summarized briefly in the following subsections.

### 3.6.1 Fluid Electrophoresis

Electrophoresis is a separation technique used for classifying and analyzing delicate and complex mixtures of biological materials, for purifying biochemical products, and for medical diagnosis. Electrophoresis means "borne of electricity" and is the movement of charged particles in solution under the influence of an electric field. Most materials that can be divided into fine particles take on a charge when dispersed in an aqueous solution. The particles move through the fluid to the oppositely charged electrode at velocities dependent on their accumulated charge, size, and shape. After a period of time, particles separate into distinct zones, just as runners in a race spread out over the course. Each distinct zone of purified particles can then be extracted. Investigators believed that this separation process would be substantially improved in the near-zero-gravity space environment by reduction in the sedimentation and thermal convection mixing. The objective of this experiment, therefore, was to demonstrate electrophoresis separation in the space environment and, if proven effective, to show that small but significant quantities of biological materials such as vaccines, viral insecticides, and other valuable materials and products could be economically purified in space.

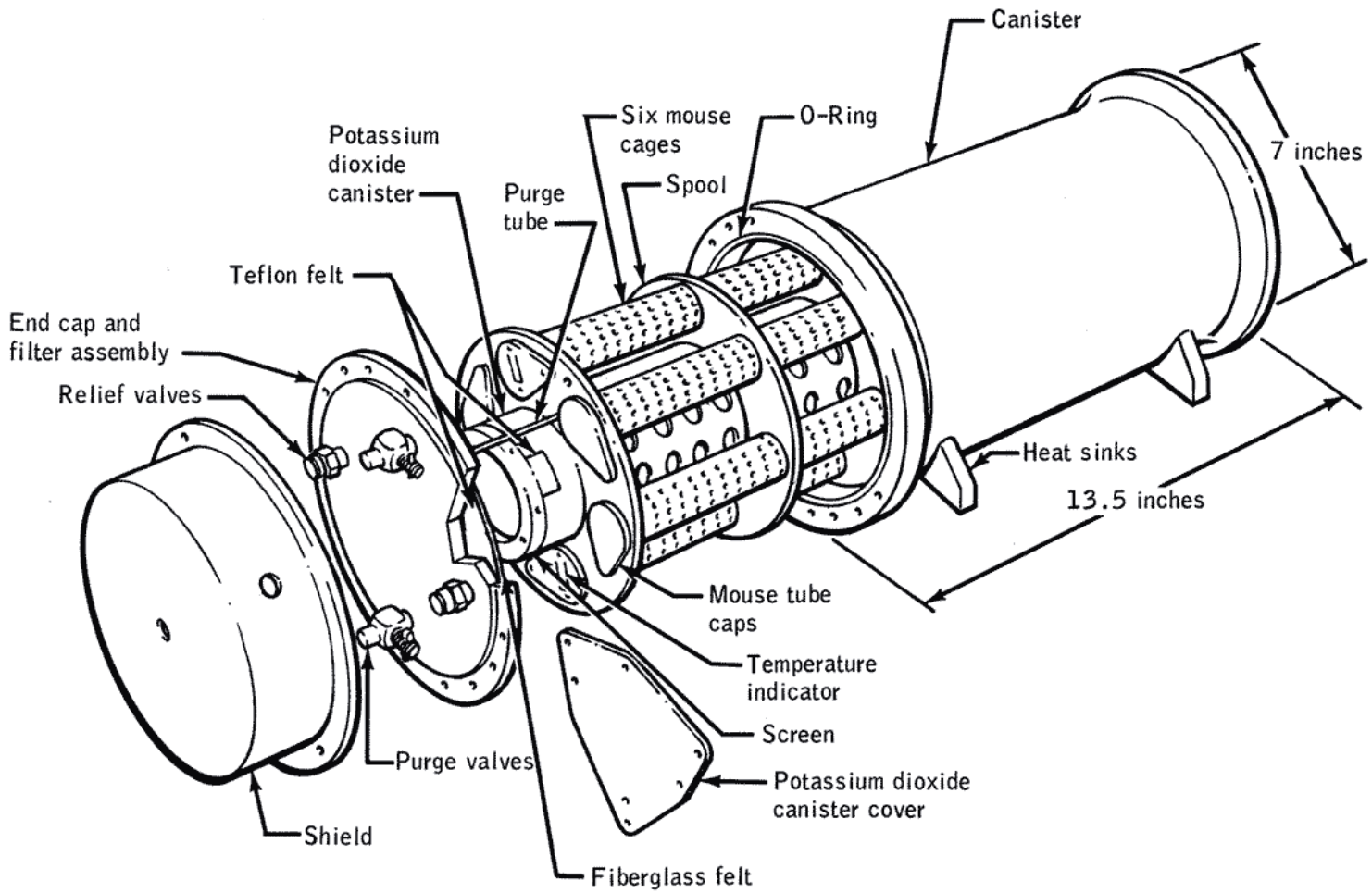


Figure 3-34.- Biological cosmic radiation (biocore) experiment package.

3.6.1.1 Apollo 14.- The Apollo 14 electrophoresis demonstration (ref. 3-68) was conceptualized and developed because of the great potential uses for this process. The experiment apparatus weighed about 5 pounds and was contained in a metal case (4 by 5 by 7 in.). The apparatus consisted of the electrical system, three electrophoresis cells, and a system to circulate the electrolyte through the cells. Each cell contained a different specimen: a red and a blue dye (for intense color and stability), hemoglobin (a high-molecular-weight biological material), and salmon sperm deoxyribonucleic acid (DNA) in an aqueous solution of boric acid.

The three experiments were run in parallel, and data were collected by photographing the action in the tubes sequentially with a 70-millimeter camera. The time required for the demonstration was 57 minutes. The results showed that the red and blue dyes separated as expected; but, because of apparatus and material problems, no action was seen in the hemoglobin or DNA tubes. (The hemoglobin and DNA may have been consumed during storage by bacterial action.) Nevertheless, much was learned about the technique and about the requirements for performing electrophoresis in space.

Conclusions drawn from analysis of the results are that (1) the resolution of the dye separation was much better in space than on earth, and (2) the shape and sharpness of the advancing boundary of separated materials was improved in space by the lack of sedimentation and convection currents, which were suppressed by the near-zero-gravity environment.

3.6.1.2 Apollo 16.- The Apollo 16 demonstration was designed to use the same basic operating elements used on the Apollo 14 mission. Although the case size and components were the same, the apparatus was heavier, weighing 7.5 pounds.

Two different particle sizes of polystyrene latex (0.2-micrometer and 0.8-micrometer diameter) were selected as the sample material to simulate the size and density of living cells. Three experiments were performed in parallel: cell 1 contained a mixture of the two sizes of latex particles, cell 2 contained only large particles, and cell 3 contained only small particles. The same experiment was done on earth to establish a control sample. Data were obtained from pictures taken automatically at 20-second intervals; the commentary transmitted by the flight crew provided additional information.

The flight pictures clearly showed the stability of the bands and the sharpness of the particle fronts during electrophoresis. By the time the samples were visible in the photographs, the front of each sample group had become pointed or bullet shaped. This shape was due to electro-osmosis of the buffer. Electro-osmosis is defined as the movement of liquid with respect to a fixed solid as a result of an applied electric field. Electro-osmosis was expected, and the apparatus was designed to minimize the effect. Large bubbles near the positive electrode distorted the electric field in this area, slowed the bands of particles in the area, and produced a corkscrew motion of the 0.8-micrometer particles in cells 1 and 2.

Interaction between identical and different particles was measured. The nose of the combined-particle band in cell 1 was composed primarily of 0.8-micrometer particles, and migration was slower than that of the 0.8-micrometer particles alone in cell 2. The leading band in both cells 1 and 2 was significantly more pointed than that of the 0.2-micrometer particles in cell 3. This phenomenon was attributed to interaction among the particles. Although a separation occurred, the 0.2-micrometer and 0.8-micrometer particles in cell 1 did not separate into distinct bands as expected.

The difficulties that limited the results of the Apollo 14 demonstration did not recur during the Apollo 16 demonstration, although the occurrence of electro-osmosis and formation of large bubbles near the positive electrode reduced the effectiveness of the demonstration. Future experiments will be aimed at solving these problems.

### 3.6.2 Liquid Transfer

One element of propellant management that will be necessary in future space operations will be transfer of liquid from a tanker vehicle to a receiver vehicle. The transfer of liquid from one container to another in a weightless environment was demonstrated by the Apollo 14 crew to determine the effectiveness of two configurations, each designed to achieve:

a. Gas-free outflow from the supply tank while obtaining a high total delivery efficiency.

b. Orderly inflow into the receiver tank with no liquid loss through the gas vent.

c. Location of the gas at the gas vent and the liquid at the drain/fill port.

To satisfy these conditions, the designs combined the desirable characteristics of existing baffle and screen concepts; one configuration was a standpipe-liner baffle design and the other was a curved-web baffle design. Reference 3-69 gives detailed descriptions of the two baffle configurations.

The demonstration apparatus consisted of a tank assembly unit, a hand-operated piston pump, and interconnecting flexible tubing. The tank assembly unit contained two pairs of model tanks. One pair had the internal surface-tension baffles that were to be demonstrated; the second pair had no baffle devices so that a comparison could be made. The model tanks were cylindrically shaped to simulate in two dimensions the three dimensional flow that would occur in a spherical tank. The tanks were 4 inches in diameter and the flat faces, separated by 0.25 inch, were of clear plastic for photographic purposes. Each tank contained two ports positioned 180° apart, representing drain/fill and vent lines. The drain/fill ports on each pair of tanks were connected by a transfer tube that contained a slide-action isolation valve. The vent ports had identical slide-action valves. A lighting frame containing six incandescent lamps and using spacecraft power provided the illumination necessary for photography. The external plastic surfaces that faced the lighting frame section were frosted to provide diffuse illumination, and all external plastic surfaces were covered with laminated safety glass and an overlay of thin fluoroplastic sheet to ensure maximum crew safety. The hand-operated piston pump was a screw-driven piston providing positive pressure on one side while creating suction on the other side. The pump could be operated in either direction. The tubing, sized for a friction fit over pump and tank port connections, could be easily switched to permit pumping between tanks in the baffled set or in the unbaffled set. The liquid used in the tanks was an inert chemical that satisfied the safety requirements for the spacecraft and simulated the static contact angle of most propellants on tank surfaces (nearly zero degrees). A small amount of dye was added to the liquid to improve the quality of the photographs.

The vent sides of a pair of tanks were connected to the pressure and suction sides of the pump, closing the system. The isolation valves on the vent ports were then opened, as well as the valve on the transfer tube interconnecting the drain/fill ports. Operation of the piston pump crank resulted in transfer of liquid from one tank to the other. On completion of a transfer operation, the crank was turned in the opposite direction to reverse the flow. One crewmember photographed the tanks either with the 16-millimeter sequence camera or the onboard television camera while the other operated the piston pump at a prescribed rate.

Several transfer operations were performed by the crew. The results of four of the operations are given in reference 3-69 as being representative of the results - three for the baffled tank system and one for the unbaffled tank system. The results are briefly summarized in the following paragraphs.

3.6.2.1 Unbaffled tanks.- In the weightless environment, the liquid/vapor interface for liquid transfer using unbaffled tanks is expected to be circular in shape, forming a gas bubble randomly located within the tank. The configuration at the start of liquid transfer consisted of a circular vapor bubble in the supply tank located such that a liquid layer covered both the drain and vent sides of the tank. The liquid filling was estimated to be 36 percent of the tank volume, with an additional 10 percent contained in the transfer tube connecting the two tanks. A gas bubble formed directly over the vent or pressurant inlet as the tank was pressurized to start the transfer.

During transfer, the liquid/vapor interface in the receiver tank was deformed because of the incoming liquid jet; however, the interface appeared stable. (The stability of the interface during liquid inflow is a function of the liquid jet velocity and, therefore, of the flow rate.)

Gas from the supply tank was ingested into the transfer tube when the liquid remaining was 24 percent of the tank volume. Continuation of the operation resulted in bubble entrainment and growth in the receiver tank. As expected, liquid eventually was ingested in the receiver tank vent.

3.6.2.2 Baffled tanks.- In the first of the three liquid-transfer operations performed with surface-tension baffled tanks, the curved-web-baffled tank was the supply tank and the standpipe-liner-baffled tank was the receiver tank. In the second test, the procedure was reversed. For these tests, the flow rate was the same order of magnitude as for transfer with the unbaffled tanks. The third transfer operation was performed at about four times the previous flow rate.

a. First operation: Liquid was transferred from the curved-web supply tank to the standpipe-liner receiver tank at an estimated flow rate of 0.83 cubic centimeter per second. As the transfer operation progressed, the liquid/vapor interface in the supply tank receded in an orderly fashion down to the point of incipient gas or vapor ingestion. During the same time, the receiver tank filled in an orderly manner with liquid filling the standpipe last. With the exception of a small amount of liquid in the capillary tube above the drain, nearly all the liquid in the supply tank was delivered to the receiver tank without gas ingestion from the supply tank and without liquid loss through the vent of the receiver tank, thereby successfully demonstrating the three design objectives.

b. Second operation: Liquid was transferred from the standpipe-liner supply tank to the curved-web receiver tank at an estimated flow rate of 0.67 cubic centimeter per second. As liquid drained from the supply tank, the standpipe emptied first, with the space between the standpipe and the liner draining next. The annular volume between the liner and the tank wall for this application is designed to remain full of liquid at the termination of transfer. This quantity represents the residual liquid inherent to this design. (Continuation of draining would result in an unpredictable vapor penetration anywhere along the wall liner, trapping liquid in the annulus.) Nearly all the supply tank liquid, with the exception of the liquid within the wall liner, was emptied without gas ingestion. During the filling of the receiver tank, the curved-web baffle controlled the interface position with no liquid loss through the gas vent. This transfer operation also demonstrated the orderly and efficient transfer of liquid in a weightless environment using surface-tension baffles.

c. Third operation: Liquid was transferred from the curved-web supply tank to the standpipe-liner receiver tank at a flow rate of 3.5 cubic centimeters per second. The receiver tank wall liner was full before initiation of flow. Again, during transfer, the interface in both tanks was stable and moved in an orderly fashion. At this higher flow rate, however, some differences occurred that are interesting to note. In the supply tank, the volume between the outermost web and the tank wall was the last to drain. These differences were attributed to variations in the dynamic pressure losses among the web channels. This conclusion indicates that the spacing of the webs and their perforations can be optimized by readjustment to provide uniform draining between webs. In this case, however, transfer was terminated when the interface for the inner webs reached the capillary tube over the drain, leaving a somewhat larger residual than for the transfer cases at lower flow rates. Similarly, the filling of the standpipe in the receiver tank lagged behind the filling of the rest of the tank, even more noticeably than for the first liquid transfer operation. However, unlike that transfer, the standpipe did not fill completely even at the end of transfer. This fact also indicates that the standpipe could be optimized by redesigning the spacing and perforations to improve the tank performance characteristics.

### 3.6.3 Heat Flow and Convection

A heat flow and convection demonstration was conducted on the Apollo 14 mission (ref. 3-70) during transearth flight and on the Apollo 17 mission (ref. 3-71) during translunar flight. For both missions, the demonstration unit contained three separate experiments. A flow pattern experiment was included to investigate convection caused by surface tension gradients resulting from heating a thin layer of liquid. A radial heating experiment was included to obtain information on heat flow in a confined gas under low-gravity conditions. A zone heating experiment was included to investigate heat transfer in confined liquids in a low-gravity environment.

3.6.3.1 Apollo 14 demonstrations.- The Apollo 14 demonstration apparatus consisted of a 9.0- by 9.0- by 3.8-inch box weighing 7 pounds. Four experiment configurations were mounted in the box - a flow pattern cell, a radial heating cell, and two zonal heating cells. Each cell contained a small electric heater powered by the spacecraft 28-volt-dc power source. The data were recorded by the 16-millimeter data acquisition camera attached to the unit and operating at a rate of one frame per second. Seven experiment operations were performed, each requiring 10 to 15 minutes.

a. Flow pattern cell: The flow pattern cell was designed to show the convective flow pattern induced in a thin layer of heavy oil (Krytox) by establishing a thermal gradient across the oil. The cell consisted of a shallow aluminum dish that was uniformly heated from the bottom. The oil was introduced from a reservoir, and a thermal gradient was established across the oil layer when the window to the cell was opened, with the heat being dissipated into the spacecraft atmosphere. Aluminum powder suspended in the oil allowed the flow patterns to be observed.

As a result of previous experiments that were conducted under one-g conditions, it was postulated that surface tension gradients (resulting from temperature gradients) are the predominant cause of cellular convection in thin layers of fluids (5-mm or less). The possibility remained, however, that gravity was an indispensible ingredient in all cellular convection, particularly as some second-order effect. The Apollo 14 experiment conclusively demonstrated that surface tension alone can generate cellular convection. The pattern of the convection was partially defined, but not in the desired constant depth configuration because wetting of the cell liner occurred.

b. Radial heating cell: The purpose of the radial heating experiment was to obtain information on the rate of temperature propagation in carbon dioxide gas while in the space environment. The cell was a cylindrical dish covered by a glass window. The glass was coated with a film containing a liquid crystal material that changes color when heated. The film was divided into quadrants, and different sectors were sensitive in different temperature ranges. The gas was heated by a small electrical stud heater mounted in the center of the cell. Changing color patterns indicated the temperature distribution as it developed, and the patterns were recorded by the camera. Two radial heating operations were performed, and the data quality was excellent.

Comparisons were made between flight data and analytical predictions based on the assumption that conduction and radiation were the only modes of heat transfer. It was concluded that convection was occurring in the radial cell, causing faster changes in temperature than can be attributed to thermal conduction and radiation. Although the convection could have been caused by low-gravity forces, it is more likely that some other unidentified non-gravity influence was responsible.

c. Zonal heating unit: The objective of the zonal heating experiment was to obtain data on the mode and magnitude of heat transfer in liquids subjected to zonal heating in a low-gravity environment. Heat transfer in configurations of the geometry of the zonal heating unit was of interest because this geometry is basic for many projected space manufacturing processes. The zonal heating cells consisted of two glass tubes with cylindrical heating elements surrounding the center portions of the tubes. One tube contained distilled water and the other, a 20-percent sugar solution. The sugar solution was used so that a comparison could be obtained between pure water and a fluid having a viscosity of approximately twice that of pure water. Temperature changes were sensed by liquid-crystal strips located along the center axes and along the walls of the tubes. Color patterns on the strips were monitored as heat flowed from the centrally heated zone toward the tube ends. Two zonal heating operations were performed and data quality appeared to be excellent.

3.6.3.2 Apollo 17 demonstration.- The Apollo 17 heat flow and convection demonstration was conducted as a follow-on to the Apollo 14 demonstration. The apparatus was similar to that used on Apollo 14, and the data were obtained in the same manner.

a. Flow pattern cell: Baffles were added around the periphery of the pan to maintain the liquid level at 2 and 4 millimeters in depth. Otherwise, the flow pattern experiment configuration was like that of the Apollo 14 unit. The experiment was operated twice, once with the 2-millimeter fluid depth and once with the 4-millimeter fluid depth. The fluid was contained by the baffles around the periphery and assumed a convex shape, similar to a lens.

The pattern of convection obtained for the 2-millimeter depth of oil was less orderly and less symmetrical than the patterns obtained with a ground-based unit, but they were more orderly and symmetrical than the pattern obtained on the Apollo 14 demonstration. The 4-millimeter-depth run showed more regular and larger cells. The results show that surface tension alone can cause a cellular convection flow of relatively high magnitude.

b. Radial heating and lineal heating units: The Apollo 17 radial and lineal (zonal) heating experiments were conducted to obtain additional information on heat flow and convection in confined gases and liquids. The experiment configurations were similar with the following major differences. In the radial heating experiment, the cell contained argon gas instead of carbon dioxide. In the lineal heating experiment, a single glass tube containing Krytox oil was used instead of two tubes containing water and a sugar-water solution. Also, the liquid in the Apollo 17 unit was heated by a disc heater at one end of the tube instead of a centrally located cylindrical heater. Temperature changes were monitored by liquid-crystal tapes immersed in the fluids.

3.6.3.3 Summary of interpretations.-

a. Flow pattern experiment:

1. The sizes of the observed surface tension-driven convection cells agree fairly well with those predicted by linear analysis of surface tension-driven cellular convection.

2. Convection occurred at lower temperature gradients in low-g than in one-g. Surface tension and gravity, therefore, apparently do not reinforce each other in a manner predicted by one analysis of cellular convection.

3. The flow pattern experiment data substantiate in principle the postulate that gravity modulates cellular convection onset.

4. The onset of a concentric side roll and center polygonal cells in the flow pattern experiment occurred at about the same time. The occurrence of a roll is contrary to expectations based on latest literature. The observed onset pattern tends to confirm an earlier view that rolls are sidewall effects and are not particularly characteristic of the driving mechanism.

b. Radial and lineal heating experiments: No significant convection was observed in the radial or lineal heating experiments. The data, however, validate the accuracy of the measuring technique and allow the conclusion that convection observed in the Apollo 14 radial and zone cells was probably caused by the heat flow and convection unit and spacecraft vibrations.

### 3.6.4 Composite Casting

Composite casting is defined as the casting of a material from a mixture of a liquid matrix and solid particles. A variation of composite casting is obtained when gas is added to form voids in the material to reduce weight and to control the material density. Another variation is obtained when normally immiscible (nonmixing) liquid materials such as oil and water are dispersed one in the other and solidified. On earth, materials of different specific gravities normally segregate from a mixture (e.g., sand and water) when at least one of the components of the mixture attains the liquid state. The purpose of the composite casting demonstration was to show that mixtures of materials having different specific gravities would remain stable (mixed) in the liquid state and during freezing in the low-gravity environment of space.

The composite casting demonstration was performed on the Apollo 14 mission during the translunar and transearth coast periods (ref. 3-72). The apparatus consisted of an electrical furnace, a heat sink device for cooling, and sealed metal capsules containing materials having a low melting point and dispersants (nonmelting particles). The furnace and heat sink package weighed slightly more than 2 pounds and measured 3.5 by 4.5 by 5.5 inches. The sample capsule weighed less than 0.5 pound and was 0.75 inch in diameter and 3.5 inches long. Procedures called for a crewman to insert each capsule into the furnace; to heat the capsule for a prescribed time; shake the materials in some cases in order to mix them; and to cool the furnace and capsule by placing them onto the heat sink.

Although 18 samples were provided, only 11 samples were processed because of time limitations. The evaluation of the 11 processed capsules consisted of comparing the space-processed (flight) samples with control samples processed on the ground under otherwise similar conditions. From the results, it was concluded that, in the low-gravity environment of space, the dispersions of particles, fibers, and gases in a liquid metal (matrix) were maintained during solidification.

The demonstration showed qualitative results in a very limited range of materials and under processing conditions that were not instrumented or closely controlled. Even so, the demonstrations were encouraging in that unique material structures were produced which provide a preliminary basis for processing materials and products in space. New problems were raised which can be solved by future ground and flight experiments. It is now evident that several factors must be considered for process and experiment design. These factors include the control of heating and cooling in low gravity when contact with heaters and heat sinks may be intermittent, control of nucleation and mixing, and control of gases for distribution in the melt or for removal from the melt.

## 3.7 REFERENCES


3-1. Brett, R.: Lunar Science. Essays in Physics, vol. 5, Academic Press, 1973, pp. 1-35.

3-2. Marvin, U. B.: The Moon After Apollo. Technology Review, vol. 75, no. 8, 1973, pp. 13-23.

3-3. Hinners, N. W.: The New Moon: A View. Revs. Geophys. and Space Phys., vol. 9, no. 3, 1971, pp. 447-522.

3-4. Milton, D. J.: Geologic Map of Theophilus Quadrangle of the Moon: Geologic Atlas of the Moon, Scale 1:1 000 000. U.S.G.S. Map I-546 (LAC 78), 1968.

3-5. Muller, P. M.; Sjogren, W. L.: Mascons; Lunar Mass Concentrations. Science, vol. 161, 1969, pp. 680-684.

3-6. Shoemaker, E. M.; Bailey, N. G.; Batson, R. M.; Dahlem, D. H.; et al.: Geologic Setting of the Lunar Samples Returned by the Apollo 11 mission. Sec. 3 of the Apollo 11 Preliminary Science Report, NASA SP-214, 1969.

3-7. Lunar Sample Analysis Planning Team: Summary of Apollo 11 Lunar Science Conference. Science, vol. 167, no. 3918, 1970, pp. 449-451.

3-8. Lunar Sample Preliminary Examination Team: Preliminary Examination of Lunar Samples From Apollo 12. Science, vol. 167, no. 3923, 1970, pp. 1325-1339.

3-9. Chapman, P. K.; Calio, A. J.; Simmons, M. G.: Summary of Scientific Results. Apollo 14 Preliminary Science Report, NASA SP-272, 1971.

3-10. Lunar Sample Analysis Planning Team: Third Lunar Science Conference. Science, vol. 176, no. 4038, 1972, pp. 975-981.

3-11. Muehlberger, W. R.; Batson, R. M.; Boudette, E. L.; Duke, C. M.; et al.: Preliminary Geologic Investigation of the Apollo 16 Landing Site. Sec. 6 of the Apollo 16 Preliminary Science Report, NASA SP-315, 1972.

3-12. Muehlberger, W. R.; Batson, R. M.; Cernan, E. A.; Freeman, V. L.; et al.: Preliminary Geologic Investigation of the Apollo 17 Landing Site. Sec. 6 of the Apollo 17 Preliminary Science Report, NASA SP-330, 1973.

3-13. Latham, G. V.; Ewing, M.; Press, F.; Dorman, J.; et al.: Passive Seismic Experiment. Sec. 11 of the Apollo 17 Preliminary Science Report. NASA SP-330, 1973.

3-14. Kovach, R. L.; Watkins, J. S.; and Landers, T.: Active Seismic Experiment. Sec. 7 of the Apollo 14 Preliminary Science Report. NASA SP-272, 1971.

3-15. Kovach, R. L.; Watkins, J. S.; and Talwani, P.: Lunar Seismic Profiling Experiment. Sec. 10 of the Apollo 17 Preliminary Science Report. NASA SP-330, 1973.

3-16. Dyal, P.; Parkin, C. W.; and Sonnett, C. P.: Lunar Surface Magnetometer Experiment. Sec. 4 of the Apollo 12 Preliminary Science Report, NASA SP-235, 1970.

3-17. Dyal, P.; Parkin, C. W.; and Sonnett, C. P.: Lunar Surface Magnetometer Experiment. Sec. 9 of the Apollo 15 Preliminary Science Report, NASA SP-289, 1972.

3-18. Dyal, P.; Parkin, C. W.; Colburn, D. S.; and Schubert, G.: Lunar Surface Magnetometer Experiment. Sec. 11 of the Apollo 16 Preliminary Science Report, NASA SP-315, 1972.

3-19. Dyal, P.; Parkin, C. W.; Sonnett, C. P.; DuBois, R. L.; and Simmons, G.: Lunar Portable Magnetometer Experiment. Sec. 13 of the Apollo 14 Preliminary Science Report, NASA SP-272, 1971.

3-20. Langseth, M. G.; Keihm, S. J.; and Chute, J. L., Jr.: Heat Flow Experiment. Sec. 9 of the Apollo 17 Preliminary Science Report, NASA SP-330, 1973.

3-21. Giganti, J. J.; Larson, J. V.; Richard, J. P.; and Weber, J.: Lunar Surface Gravimeter Experiment. Sec. 12 of the Apollo 17 Preliminary Science Report, NASA SP-330, 1973.

3-22. Talwani, M.; Thompson, G., Dent, B.; Kahle, H.; and Buck, S.: Traverse Gravimeter Experiment. Sec. 13 of the Apollo 17 Preliminary Science Report, NASA SP-330, 1973.

3-23. Simmons, G.; Strangway, D.; Annan, P.; Baker, R; et al.: Surface Electrical Properties Experiment. Sec. 15 of the Apollo 17 Preliminary Science Report, NASA SP-330, 1973.

3-24. Woolum, D.; Burnett, D. S.; and Bauman, C. A.: Lunar Neutron Probe Experiment. Sec. 18 of the Apollo 17 Preliminary Science Report, NASA SP-330, 1973.

3-25. Faller, J. E.: Laser Ranging Retro-Reflector Experiment Final Report. Contract NAS 9-11025, September, 1973.

3-26. O'Brian, B. J.; and Reasoner, D. L.: Charged-Particle Lunar Environment Experiment. Sec. 10 of the Apollo 14 Preliminary Science Report, NASA SP-272, 1971.

3-27. Snyder, C. W.; Clay, D. R.; and Neugebauer, M.: The Solar Wind Spectrometer Experiment. Sec. 5 of the Apollo 12 Preliminary Science Report, NASA SP-235, 1970.

3-28. Geiss, J.; Buehler, F.; Cerutti, H.; Eberhardt, P.; and Filleux, Ch.: Solar Wind Composition Experiment. Sec. 14 of the Apollo 16 Preliminary Science Report, NASA SP-315, 1972.

3-29. Eberhardt, P.; Geiss, J.; Graf, H.; Grogler, N.; et al.: Trapped Solar Wind Gases, Exposure Age and K/Ar Age in Apollo 11 Lunar Fine Material. Proceedings of the Apollo 11 Lunar Science Conference, supp. 1, vol. 2, Pergamon Press (New York), 1970, pp. 1037-1070.

3-30. Eberhardt, P.; Geiss, J.; Graf, H.; Grogler, N.; et al.: Trapped Solar Wind Noble Gases in Apollo 12 Lunar Fines 12001 and Apollo 11 Breccia 10046. Proceedings of the Third Lunar Science Conference, vol. II, MIT Press (Cambridge), 1972, pp. 1821-1856.

3-31. Hills, H. K.; Meister, J. C.; Vondrock, R. R.; and Freeman, J. W., Jr.: Suprathermal Ion Detector Experiment. Sec. 12 of the Apollo 15 Preliminary Science Report, NASA SP-289, 1972.

3-32. Freeman, J. W.; Hills, H. K.; and Vondrock, R. R.: Water Vapor, Whence Comest Thou? Proc. Third Lunar Science Conf., Geochim. Cosmochim. Acta, 1972, pp. 2217-2230.

3-33. Fleischer, R. L.; Price, P. B.; Burnett, D.; et al.: Cosmic Ray Experiment. Sec. 15 of the Apollo 16 Preliminary Science Report, NASA SP-315, 1972.

3-34. Berg, O. E.; Richardson, F. F.; and Burton, H.: Lunar Ejecta and Meteorites Experiment. Sec. 16 of the Apollo 17 Preliminary Science Report, NASA SP-330, 1973.

3-35. Johnson, F. S.; Carroll, J. J.; and Evans, D. E.: Lunar Atmosphere Measurements. Proceedings of the Third Lunar Science Conference, vol. 3, MIT Press (Cambridge), 1972, pp. 2205-2216.

3-36. Hoffman, J. H.; Hodges, R. R., Jr.; Johnson, F. S.; and Evans, D. E.: Lunar Atmospheric Composition Experiment. Sec. 17 of the Apollo 17 Preliminary Science Report, NASA SP-330, 1973.

3-37. Carruthers, G. R.; and Page, T.: Far UV Camera/Spectrograph. Sec. 13 of the Apollo 16 Preliminary Science Report, NASA SP-315, 1972.

3-38. Howard, H. T.; and Tyler, G. L.: Bistatic Radar Investigation. Sec. 25 of the Apollo 16 Preliminary Science Report, NASA SP-315, 1972.

3-39. Sjogren, W. L.; Muller, P. M.; and Wollenhaupt, W. R.: S-Band Transponder Experiment. Sec. 24 of the Apollo 16 Preliminary Science Report, NASA SP-315, 1972.

3-40. Sjogren, W. L.; Wollenhaupt, W. R.; and Wimberly, R. N.: S-Band Transponder Experiment. Sec. 14 of the Apollo 17 Preliminary Science Report, NASA SP-330, 1973.

3-41. Low, F. J.; and Mendell, W. W.: Infrared Scanning Radiometer. Sec. 24 of the Apollo 17 Preliminary Science Report, NASA SP-330, 1973.

3-42. Phillips, R. J.; Adams, G. F.; Brown, W. E., Jr.; Eggleton, R. E.; et al.: Apollo Lunar Sounder Experiment. Sec. 22 of the Apollo 17 Preliminary Science Report, NASA SP-330, 1973.

3-43. Anderson, K. A.; Chase, L. M.; Lin, R. P.; McCoy, J. E.; and McGuire, R. E.: Subsatellite Measurements of Plasmas and Solar Particles. Sec. 21 of the Apollo 15 Preliminary Science Report, NASA SP-289, 1972.

3-44. Anderson, K. A.; Chase, L. M.; Lin, R. P.; McCoy, J. E.; and McGuire, R. E.: Subsatellite Measurements of Plasma and Energetic Particles. Sec. 22 of the Apollo 16 Preliminary Science Report,NASA SP-315, 1972.

3-45. Coleman, P. J., Jr.,; Schubert, G.; Russell, C. T.; Sharp, L. R.: The Particles and Fields Subsatellite Magnetometer Experiment. Sec. 22 of the Apollo 15 Preliminary Science Report, NASA SP-289, 1972.

3-46. Coleman, P. J., Jr.; Lichtenstein, B. R.; Russell, C. T.; Schubert, G.; and Sharp, L. R.: The Particles and Fields Subsatellite Magnetometer Experiment. Sec. 23 of the Apollo 16 Preliminary Science Report, NASA SP-315, 1972.

3-47. Cour-Palais, B. G.; Brown, M. L.; and McKay, D. S.: Apollo Window Meteoroid Experiment. Sec. 26 of the Apollo 16 Preliminary Science Report, NASA SP-315, 1972.

3-48. Arnold, J. R.; Peterson, L. E.; Metzger, A. E.; and Trombka, J. I.: Gamma-Ray Spectrometer Experiment. Sec. 16 of the Apollo 15 Preliminary Science Report, NASA SP-289, 1972.

3-49. Arnold, J. R.; Metzger, A. E.; Peterson, L. E.; Reedy, R. C.; and Trombka, J. I.: Gamma-Ray Spectrometer Experiment. Sec. 18 of the Apollo 16 Preliminary Science Report, NASA SP-315, 1972.

3-50. Adler, I.; Trombka, J.; Gerard, J.; Schmodebeck, R.; et al.: X-Ray Fluorescence Experiment. Sec. 17 of the Apollo 15 Preliminary Science Report, NASA SP-289, 1972.

3-51. Adler, I.; Trombka, J.; Gerard, J.; Lowman, P.; et al.: X-Ray Fluorescence Experiment. Sec. 19 of the Apollo 16 Preliminary Science Report, NASA SP-315, 1972.

3-52. Gorenstein, P.; and Bjorkholm, P.: Alpha-Particle Spectrometer Experiment. Sec. 20 of the Apollo 16 Preliminary Science Report, NASA SP-315, 1972.

3-53. Hoffman, J. H.; Hodges, R. R.; and Evans, D. E.: Lunar Orbital Mass Spectrometer Experiment. Sec. 19 of the Apollo 15 Preliminary Science Report, NASA SP-289, 1972.

3-54. Hodges, R. R.; Hoffman, J. H.; and Evans, D. E.: Lunar Orbital Mass Spectrometer Experiment. Sec. 21 of the Apollo 16 Preliminary Science Report, NASA SP-315, 1972.

3-55. Fastie, W. G.; Feldman, P. D.; Henry, R. C.; Moos, H. W.; Barth, C. A.; et al.: Ultraviolet Spectrometer Experiment. Sec. 23 of the Apollo 17 Preliminary Science Report, NASA SP-330, 1973.

3-56. Analysis of Apollo 8 Photography and Visual Observations. Compiled by Johnson Space Center. NASA SP-201, 1969.

3-57. Goetz, A. F. H.; Billingsley, F. C.; Yost, E.; and McCord, T. B.: Apollo 12 Multispectral Photography Experiment. Sec. 9 of the Apollo 12 Preliminary Science Report, NASA SP-235, 1970.

3-58. Apollo 15 Mission Report. NASA Johnson Space Center Report MSC-05161, Dec. 1971.

3-59. Apollo 16 Mission Report. NASA Johnson Space Center Report MSC-07230, Aug. 1972.

3-60. Apollo 17 Mission Report. NASA Johnson Space Center Report JSC-07904, Mar. 1973.

3-61. Roberson, F. I.; and Kaula, W. M.: Apollo 15 Laser Altimeter. Sec. 25, Part D, Apollo 15 Preliminary Science Report, NASA SP-289, 1972.

3-62. Wollenhaupt, W. R.; and Sjogren, W. L.: Apollo 16 Laser Altimeter. Sec. 30, Part A, Apollo 16 Preliminary Science Report, NASA SP-315, 1972.

3-63. Wollenhaupt, W. R.; Sjogren, W. L.; Lingenfelter, R. E.; Schubert, G.; and Kaula, W. M.: Apollo 17 Laser Altimeter. Sec. 33, Part E, Apollo 17 Preliminary Science Report, NASA SP-330, 1973.

3-64. El-Baz, F.; Scott, D. H.; Milton, D. J.; Hodges, C. A.; Pohn, H. A.; Head, J. W.; et al.: Orbital Science Photography. Sec. 18 of the Apollo 14 Preliminary Science Report, NASA SP-272, 1971.

3-65. El-Baz, F.; and Worden, A. M.: Visual Observations from Lunar Orbit. Sec 25, Part A, Apollo 15 Preliminary Science Report, NASA SP-289, 1972.

3-66. Mattingly, T. K.; El-Baz, F.; and Laidley, R. A.: Observations and Impressions from Lunar Orbit. Sec. 28 of the Apollo 16 Preliminary Science Report, NASA SP-315, 1972.

3-67. Evans, R. E.; and El-Baz, F.: Geological Observations from Lunar Orbit. Sec. 28 of the Apollo 17 Preliminary Science Report, NASA SP-330, 1973.

3-68. McKannan, E. C.; Krupnick, A. C.; Griffin, R. N.; and McCreight, L. R.: Electrophoresis Separation in Space - Apollo 14. NASA TM X-64611, 1971.

3-69. Abdalla, K. L.; Otto, E. W.; Sumons, E. P.; and Petrash, D. A.: Liquid Transfer Demonstration On Board Apollo 14 During Transearth Coast. NASA TM X-2410, 1971.

3-70. Bannister, T. C.: Heat Flow and Convection Demonstration, Apollo 14, Summary Report. NASA Marshall Space Flight Center Report S&E-SSL-TR-71-1, 1971.

3-71. Bannister, T. C.; Grodzka, P. G.; Spradley, L. W.; Bourgeois, S. V; Heddon, R. O.; and Facemire, B. R.: Heat Flow and Convection Experiments. NASA TM X-64772, 1973.

3-72. Yates, I. C., Jr.: Apollo 14 Composite Casting Demonstration Final Report. NASA TM X-64641, 1971.

# 4.0 VEHICLE DEVELOPMENT AND PERFORMANCE

The first announcement of the Apollo program and its objectives was made in 1960. At that time, two techniques, direct ascent and earth-orbit rendezvous, were being considered for achieving a manned lunar landing. A third technique, lunar orbit rendezvous, was later determined to be more feasible and was eventually adopted in July 1962. Before this decision had been made, however, a preliminary program for manned lunar landings was formulated. Sufficient broadly applicable launch vehicle and spacecraft design requirements were identified in the preliminary studies to permit hardware development to proceed. Consequently, the basic Apollo spacecraft contract for the command and service module was awarded in 1961, and development of a large launch vehicle, which had begun in 1958, was changed and expanded to meet the goal of landing on the moon. The contract for the lunar module was awarded in November 1962.

The following discussion is divided into ten subsections. The first covers the design, development, and testing of the three series of Saturn launch vehicles used in the Apollo program. The second covers the Little Joe II test program. The remaining subsections contain discussions of the development and performance of the spacecraft and their major systems.

## 4.1 SATURN LAUNCH VEHICLES

### 4.1.1 Introduction

The Saturn family of large launch vehicles consisted of the Saturn I, Saturn IB, and Saturn V (fig. 4-1). Each of these played an important role in the Apollo program. Saturn I, the earliest of the vehicles, was used to test the structural integrity of the Apollo command module and the ability of its heat shield to withstand the temperatures generated on entry into the earth's atmosphere. The Saturn IB launch vehicle was used to launch the Apollo command and service module and the lunar module into orbit about the earth for testing in the space environment. The Saturn IB also launched the first manned Apollo spacecraft into orbit to check out both crew and spacecraft in space. When the Apollo program became operational, the Saturn V was used to launch the spacecraft into a translunar trajectory. The operational-payload configuration is shown in figure 4-2.

As early as April 1957, a team of engineers at the U.S. Army Ballistic Missile Agency, under the direction of Dr. Wernher von Braun, began studies of a large launch vehicle that could place 20 000- to 40 000-pound satellites into orbit about the earth or send 6000- to 12 000-pound payloads on escape missions from earth. In December 1957, this team proposed to the Department of Defense a large rocket with a thrust of 1.5 million pounds. A research program for such a vehicle was approved by the Advanced Research Projects Agency on August 15, 1958. The vehicle was originally named Juno 5, but the name was officially changed to Saturn on February 3, 1959. This Saturn became the first stage of the Saturn I and the forerunner of the first stage of the Saturn IB.

On July 1, 1960, the team developing the Saturn was transferred by President Eisenhower from the U.S. Army to the newly established National Aeronautics and Space Administration. Thus was formed the George C. Marshall Space Flight Center. While developing the Saturn I, the new center also began looking toward even larger launch vehicles in the summer of 1961. On January 25, 1962, the Saturn V was authorized as the launch vehicle for the Apollo program.

### 4.1.2 Saturn I

The Saturn I was a liquid-propellant, two-stage rocket. The first stage (S-I) consisted of a cluster of nine propellant tanks and eight H-1 engines, each producing 165 000 pounds of thrust. Using liquid oxygen and RP-1 (kerosene), the stage produced 1 320 000 pounds of thrust initially. Later, when the H-1 engine was uprated in performance to 188 000 pounds, the first stage had a thrust of 1 504 000 pounds. The second stage (S-IV) used liquid oxygen and liquid hydrogen in six RL-10A-3 engines, each producing 15 000 pounds of thrust for a total stage thrust of 90 000 pounds. An instrument unit on the forward end of the S-IV stage housed the vehicle's inertial

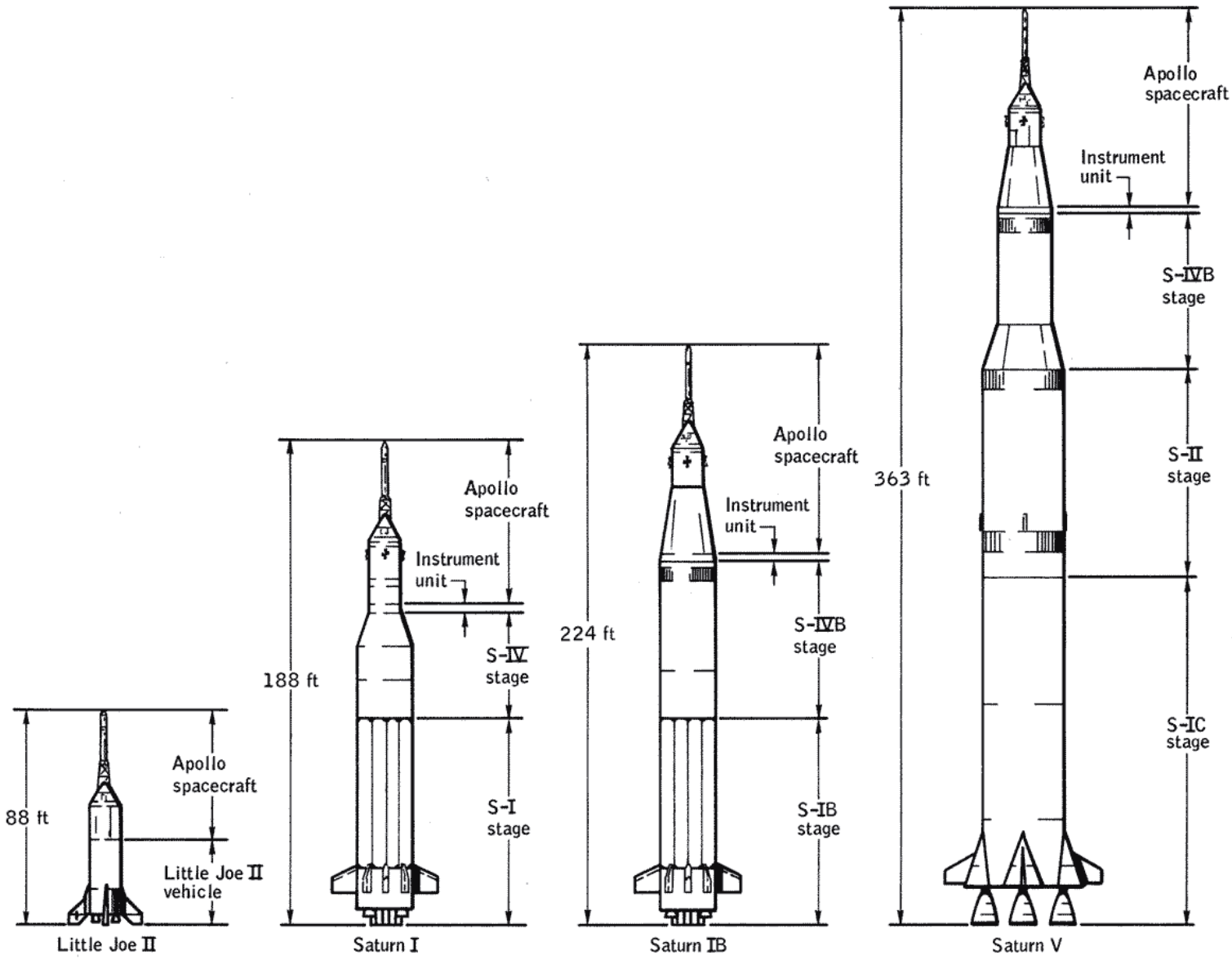


Figure 4-1.- Apollo launch vehicle configurations.

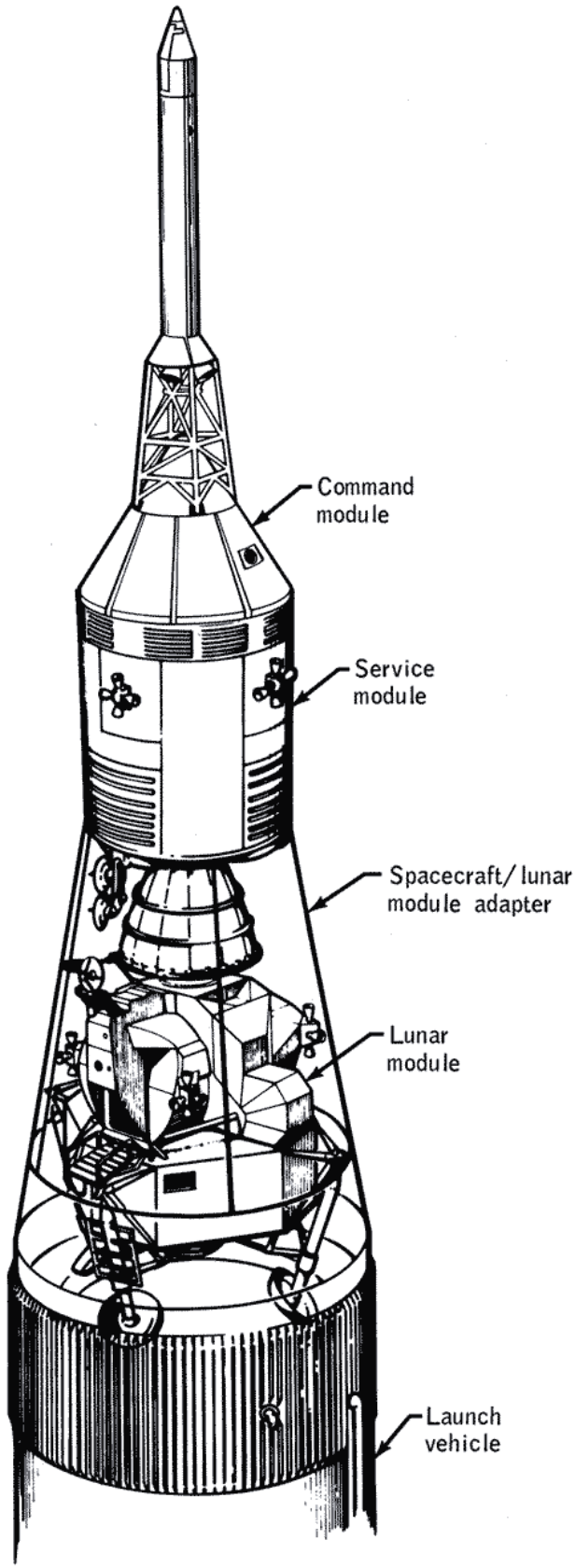


Figure 4-2.- Apollo launch configuration for lunar landing mission.

guidance and control equipment, instrumentation and measuring devices, power supplies, and telemetry transmitters. Thrust vector or path control of the S-I stage was by means of four gimbal-mounted outer engines moving in response to computer-generated commands in the instrument unit. The Saturn I, 188 feet in height and 21.7 feet in diameter, typically weighed 1 140 000 pounds when fully fueled.*

### 4.1.3 Saturn IB

The Saturn IB, also a liquid-propellant, two-stage rocket, was, for the most part, an uprated Saturn I. Construction of the first stage (S-IB) was similar to, but 2.4 inches shorter than the S-I stage. The eight H-1 engines were uprated to produce 200 000 pounds of thrust each for a total stage thrust of 1 600 000 pounds. The second stage (S-IVB) had a single J-2 engine, using liquid oxygen and liquid hydrogen to generate 225 000 pounds of thrust. The instrument unit attached to the forward end of the S-IVB stage performed the same functions as that of the Saturn I. The Saturn IB was 224 feet in height and 21.7 feet in diameter. The weight of the vehicle at launch was typically 1 300 000 pounds.*

### 4.1.4 Saturn V

The Saturn V was a liquid-propellant, three-stage rocket. The first stage (S-IC) had five engines, using liquid oxygen and RP-1. Each engine produced 1.5 million pounds of thrust. Thus, the S-IC stage generated 7.5 million pounds of thrust. The second stage (S-II) had five J-2 engines and produced 1 125 000 pounds of thrust. The third stage was an S-IVB, essentially the same as that of the Saturn IB. Similarly, the Saturn V instrument unit was basically the same as that of the Saturn IB. The Saturn V, 363 feet in height and 33 feet in diameter at the S-IC stage, typically weighed 6 500 000 pounds when fully fueled.*

### 4.1.5 Design and Development

The design safety factors for the Saturn vehicles were based originally on those required for an aircraft. These values were adjusted downward in view of the experience gained in the Mercury and Gemini programs and because of the proposed structure of the Saturn vehicles.

The design mission of the Saturn I was to place a 38 000-pound payload consisting of the Apollo boilerplate command module into a 100-mile orbit on a launch azimuth between 100° and 90° east of north from Cape Kennedy. On a secondary mission, a ballasted Jupiter nose cone contained a Q-ball transducer for measuring vehicle angle of attack. The major design criteria for the Saturn I were:

a. Minimum vehicle lift-off weight to thrust ratio

b. Man-rated vehicle

c. Self-supporting structure

d. Unipotential electrical structure

e. Mission achievement with one engine out in the first or second stage

f. Yield safety factor of 1.10 times design load

g. Ultimate safety factor of 1.40 times design load

The design mission for the Saturn IB was to place a 41 600-pound Apollo spacecraft into a 105-mile orbit at a launch azimuth of 70° east of north from Cape Kennedy. The major design criteria were the same as those for the Saturn I. The design mission for Saturn V was to place 250 000 pounds into a 100-mile orbit at a launch azimuth of 70° east of north from Cape Kennedy. Again, the major design criteria were the same.

*Vehicle heights and weights are for final configurations and include Apollo spacecraft payloads.

The testing program developed for the Saturn vehicles was designed to ensure a high degree of reliability and mission success. The degree to which it succeeded is demonstrated by the fact that, at the end of the Apollo program, the success records of the Saturn I, Saturn IB, and Saturn V vehicles were 100, 100, and 92 percent, respectively. Moreover, these results were achieved by launching far fewer research flights than had been the practice during the development of large missiles such as the Atlas and Titan, which preceded Saturn as the first carrier vehicles for U.S. manned flights. The Saturn I was declared operational after the seventh flight; the Saturn IB was certified for manned flight after only three flights; and the far more complex Saturn V was ready for launching its first manned payload after only two flights.

The concept of "all up" testing was instituted with the advent of the Saturn V. With this procedure, all three stages were flight tested on the first vehicle launched. The AS-501 (Apollo 4) vehicle, launched on November 9, 1967, was the first application.

The testing program for the Saturn vehicles was purposely designed to be conservative to ensure the highest reliability possible. The five essential phases were qualification, reliability, development, acceptance, and flight testing. Qualification testing assured that individual parts and subassemblies performed as required as a result of special tests that subjected parts to the vacuum, vibration, sound, heat, and cold levels that would be experienced in operational use. Reliability analysis consisted of determining the range of failures or margins of error for components. Development testing used "battleship" test stages of the vehicle to verify design features such as propellant loading, electrical continuity, and engine firing procedures. As a part of the developmental testing, a Saturn V test vehicle with an Apollo spacecraft in place was suspended in the 420-foot-high dynamic test stand at the Marshall Space Flight Center and shaken to simulate flight forces to determine vehicle bending modes and vibration frequencies. Acceptance testing included a functional checkout at the manufacturer's facility to ensure that the components or stage performed to design specifications. For example, ultrasonic techniques were used to inspect a fourth of a mile of welding and 5 miles of tubing in the Saturn V. The same technique was also used to verify the integrity of adhesive bonding in over 1 acre of such surfaces.

During the development of the Saturn V, a number of problems arose, the solution of which materially advanced the state of the art of design and manufacture of large rockets. Typical of these was the realization that the emergency detection system of the vehicle would not be effective in the case of an engine going out in the S-IC stage or an actuator of such an engine locking in the hardover position. The problem was solved by redesigning the stage control system and increasing structural tension capability at critical joints within the stage.

Several major problems that arose during manufacture were successfully solved. When conventional forming methods for producing large, curved panels with irregular cross sections proved insufficient for the size, shape, and tolerance demanded by the Saturn V, engineers developed special forming processes to meet the requirements. One of the great problems encountered during the development of propellant tanks was providing adequate insulation for liquid hydrogen at minus 423° F. The problem was solved by the development of a special polyurethane foam with the insulative properties of balsa wood. Although balsa wood had been an early, almost ideal candidate for such a job, it was difficult to obtain in the desired quantities, difficult to machine, and could not be found in a flawless state. Thus, imaginative materials engineering produced, in effect, a plastic substitute for flawless balsa wood. The plastic foam proved to be efficient, economical, and easy to shape.

In the course of the development of the Saturn vehicles, most operational problems had been foreseen. There were, of course, minor technical problems involved in the many mechanical, electrical, and pneumatic interfaces between the launch vehicle and its associated ground support equipment. In the case of the Saturn V, these were, for the most part, resolved through the use of a facilities model. The SA-500F vehicle was not meant to fly but was similar in every respect to a flight vehicle. Its purpose was to verify launch procedures, train launching crews, and develop checkout procedures. The SA-500F was rolled out from the Vehicle Assembly Building at Cape Kennedy on May 25, 1966.

### 4.1.6 Mission Performance

The mission performance of the Saturn vehicles proved that their design and manufacture were equal to the requirements placed upon them. The Saturn I vehicle made 10 flights between 1961 and 1965, all of which were successful. Similarly, the Saturn IB made five flights between 1966 and 1968, all of which were also successful. Of the 12 Saturn V flights through the end of the Apollo program, only one flight had a launch vehicle failure which precluded attainment of the primary mission objectives. On the Apollo 6 mission, an unmanned development flight, two of the second stage engines shut down early, and the third-stage engine failed to start after a programmed orbital coast period.

Relatively few Saturn V design changes were made from mission to mission because of the limited number of vehicles planned and built. Changes were made only to reduce weight, increase safety or reliability, or improve payload capability.

Typical of the early changes resulting from mission performance was the removal of air scoops from the S-IC stage of SA-502, the Apollo 6 launch vehicle, when it was found from the Apollo 4 flight that they were not needed and that their absence increased ground clearance at lift-off. Similarly, on the same vehicle, it was found that four ullage rockets were sufficient to seat propellants in the S-IVB stage; thus, four of the original eight were eliminated with a concomitant weight saving.

A major modification was made on SA-503, the Apollo 8 vehicle, as a result of the Apollo 6 mission. A longitudinal oscillation or "pogo" effect was experienced as a result of engine thrust variations coupling through propellant feed lines to the structure of the vehicle to produce a pronounced vibration. Helium gas was injected into the liquid oxygen prevalves of the suction lines to dampen the unwanted oscillations.

On SA-504, the Apollo 8 vehicle, a number of changes were made in the S-IC and S-II stages to reduce the vehicle weight and provide greater payload capacity. Typical of these were the redesign of the liquid oxygen tank of the S-IC stage to make it lighter and the uprating of the J-2 engine of the S-II stage from 225 000 to 230 000 pounds of thrust.

For the Apollo 15 mission (launch vehicle SA-510), an increased payload capability of about 5000 pounds was required. This increase resulted from the additional weight of consumables and hardware for supporting the longer duration lunar stay requirements of the J-series missions, as well as the addition of the scientific instrument module in the service module and the lunar roving vehicle. Many minor modifications were made to the launch vehicle and to the mission requirements to meet this payload increase. Part of this gain in payload capability came through uprating the five F-1 engines of the S-IC stage from 1 500 000 pounds to 1 522 000 pounds of thrust. Additional payload capability was gained by eliminating the four solid-propellant retromotors from the S-IC stage and by deleting the remaining four ullage motors from the S-II stage. In addition, the flight program of the instrument unit had to be changed to place the S-IVB stage into an earth parking orbit at 90 miles. No significant changes were made to the Saturn V for the two remaining missions, Apollo 16 and 17.

## 4.2 LITTLE JOE II PROGRAM

### 4.2.1 Introduction

From August 1963 to January 1966, a series of unmanned flight tests was conducted at the White Sands Missile Range to demonstrate the adequacy of the Apollo launch escape system and to verify the performance of the command module earth landing system. The launch vehicle used for four of these tests was the Little Joe II. The size of this vehicle is compared to that of the Saturn vehicles in figure 4-1. Its predecessor, the Little Joe, had been used in testing the launch escape system for the Mercury spacecraft. In addition to the Little Joe II flights, two pad abort tests were conducted in which the launch escape system was activated at ground level. Details of the six flights are given in appendix A.

The program was originally planned to be conducted at the U.S. Air Force Eastern Test Range at Cape Kennedy. However, because of a heavy schedule of high-priority launches at that facility, other possible launch sites were evaluated. Launch Complex 36 at the White Sands Missile Range, previously used for Redstone missile tests, was ultimately selected as the most suitable for meeting schedule and support requirements. Also, the White Sands Range allowed land recovery which was less costly and complicated than the water recovery procedure that would have been required at the Eastern Test Range or at the NASA Wallops Island facility.

The program was conducted under the direction of the Manned Spacecraft Center with joint participation by the prime contractors for the launch vehicle and spacecraft. The White Sands Missile Range administrative, range, and technical organizations provided the facilities, resources, and services required. These included range safety, radar and camera tracking, command transmission, real-time data displays, photography, telemetry data acquisition, data reduction, and recovery operations.

### 4.2.2 Launch Vehicle Development

Man-rating of the launch escape system was planned to be accomplished at minimum cost early in the Apollo program. Since there were no reasonably priced launch vehicles with the payload capability and thrust versatility that could meet the requirements of the planned tests, a contract was awarded for the development and construction of a specialized launch vehicle. Fabrication of detail parts for the first vehicle started in August 1962, and final factory systems checkout was completed in July 1963. The original fixed-fin configuration and a later version using flight controls are shown in figure 4-3.

The vehicle was sized to match the diameter of the Apollo spacecraft service module and to suit the length of the Algol rocket motors. Aerodynamic fins were sized to assure that the vehicle was inherently stable. The structural design was based on a gross weight of 220 000 pounds, of which 80 000 pounds was payload. The structure was also designed for sequential firing with a possible 10-second overlap of four first-stage and three second-stage sustainer motors. Sustainer thrust was provided by Algol solid-propellant motors. Versatility of performance was achieved by varying the number and firing sequence of primary motors (capability of up to seven) required to perform the mission. Recruit rocket motors were used for booster motors as required to supplement lift-off thrust. The configurations of the five vehicles flown are summarized in table 4-I.

A simplified design, tooling, and manufacturing concept was used to limit the number of vehicle components, reduce construction time, and hold vehicle costs to a minimum. Because overall weight was not a limiting factor in the design, overdesigning of primary structural members greatly reduced the number and complexity of structural proof tests. Whenever possible, vehicle systems were designed to use readily available off-the-shelf components that had proven reliability from use in other aerospace programs, and this further reduced overall costs by minimizing the amount of qualification testing required.

### 4.2.3 Spacecraft

The command and service modules used in this program evolved from the simple structure of boilerplate 6, representing only the proper aerodynamic shape, to the production spacecraft structure of airframe 002, a flight-weight Block I structure with crew couch struts, flight-weight heat shield, crew windows, and other Apollo flight hardware.

The launch escape system consisted of the major structures and systems shown in figure 4-4. The launch escape tower was attached to the command module by explosive bolts. For a normal tower jettison, the bolts were pyrotechnically severed and the tower jettison motor was ignited. For aborts requiring use of the launch escape system, the launch escape motor (and pitch control motor for low-altitude aborts) would have been fired to propel the command module away from the launch vehicle. After launch escape vehicle turnaround, the tower would have been separated from the command module by ignition of the explosive bolts and firing of the tower jettison motor.

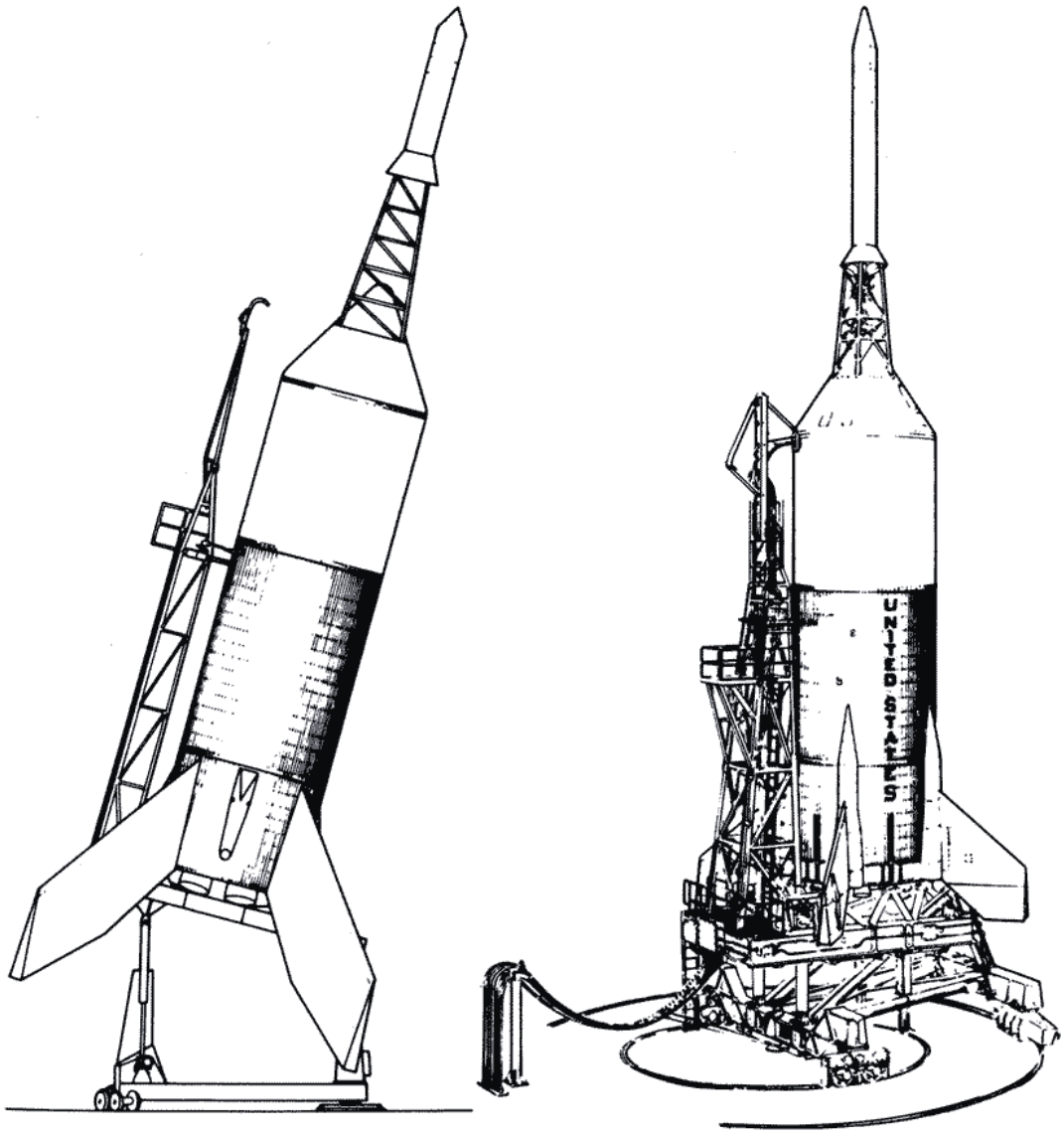


Original configuration

Final configuration

Figure 4-3.- Little Joe II vehicle.

TABLE 4-I.- LAUNCH VEHICLE CONFIGURATION SUMMARY

| Item | [a]QTV | A-001 | A-002 | A-003 | A-004 |
|---|---|---|---|---|---|
| Launch weight, lb . . . . . | 57 165 | 57 939 | 94 331 | 177 189 | 139 731 |
| Payload: | | | | | |
| Weight, lb . . . . . | 24 225 | 25 335 | 27 692 | 27 836 | 23 185 |
| Ballast, lb . . . . . | - | - | - | - | 9361 |
| Airframe: | | | | | |
| Weight including motors, lb . . . | 32 941 | 32 595 | 58 030 | 144 309 | 101 328 |
| Ballast, lb . . . . . | - | - | 8609 | 5044 | 5867 |
| Fixed fin . . . . . | X | X | - | - | - |
| Controllable fin . . . . . | - | - | X | X | X |
| Propulsion: | | | | | |
| First stage (Recruit) . . . . . | 6 | 6 | 4 | - | 5 |
| First stage (Algol) . . . . . | 1 | 1 | 2 | 3 | 2 |
| Second stage (Algol). . . . . | - | - | - | 3 | 2 |
| Attitude control: | | | | | |
| Pitch programmer . . . . . | - | - | X | X | X |
| Pitchup capability . . . . . | - | - | X | - | X |
| Reaction control . . . . . | - | - | X | X | - |
| Aerodynamic control . . . . . | - | - | X | X | X |
| RF command: | | | | | |
| Range safety destruct . . . . . | X | - | X | X | X |
| Thrust termination and abort. . . | - | X | - | - | - |
| Pitchup and abort . . . . . | - | - | X | - | X |
| Abort . . . . . | - | - | - | X | X |
| Electrical: | | | | | |
| Primary . . . . . | - | - | X | X | X |
| Instrumentation . . . . . | X | - | X | - | X |
| Instrumentation: | | | | | |
| RF transmitters . . . . . | 3 | (b) | 2 | (b) | 1 |
| Telemetry measurements . . . . . | 66 | 3 | 58 | 13 | 39 |
| Landline measurements . . . . . | 24 | 24 | 37 | 45 | 36 |
| Radar beacon: | | | | | |
| Launch vehicle . . . . . | X | - | - | - | - |
| Payload . . . . . | - | X | X | X | X |

[a]Qualification test vehicle.

[b]Located in payload.

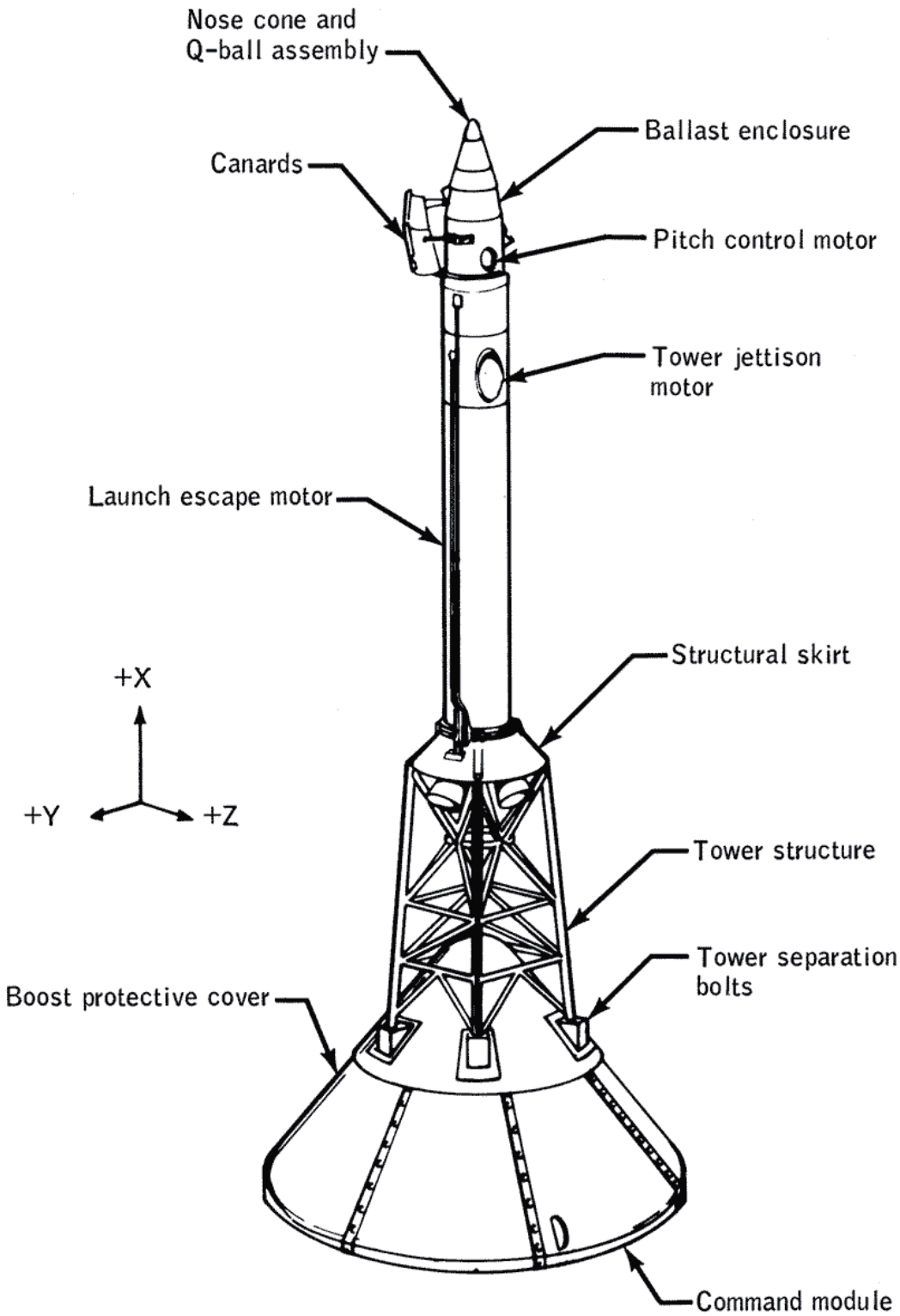


Figure 4-4.- Launch escape vehicle configuration for mission A-003.

Early in the flight testing phase of the Little Joe II program, data from other sources indicated that previously designed destabilizing strakes on the command module were ineffective in assuring a blunt-end-forward attitude following an abort. (The design of the parachute recovery system required that the forward heat shield and parachutes be deployed into the wake of the command module when descending at high velocities.) To assure the proper command module attitude for all abort conditions, two wing-like surfaces, called canards, were added to the forward end of the launch escape system (fig. 4-4). The canards were deployed by a pyrotechnic thruster acting through a mechanical linkage. The thruster also contained a hydraulic attenuator for control of the deployment speed and a mechanical lock to maintain the surfaces in the fully open position following deployment. The launch escape system was never required to be used during any of the Apollo missions; however, the tests conducted during the Little Joe II program demonstrated that the system would have performed its function successfully had it been required.

At about this same time in the program, severe abrasion of the command module windows was found to have been caused by the launch escape motor exhaust. Since visual references were required by Apollo crews in the event of an abort after launch escape tower jettisoning, a boost protective cover was designed to envelop the command module during the early boost stage of an Apollo mission. The cover was fabricated from fiberglass cloth to which an outer layer of cork was bonded. Windows were also installed to allow visibility from within the command module. The cover assembly was attached to the launch escape tower base and was separated from the command module when the tower was jettisoned.

### 4.2.4 Concluding Remarks

The Little Joe II launch vehicle proved to be very acceptable for use in this program. Two difficulties were experienced. The qualification test vehicle did not destruct when commanded to do so because improperly installed primacord did not propagate the initial detonation to the shaped charges on the Algol engine case. The fourth mission (A-003) launch vehicle became uncontrolled about 2.5 seconds after lift-off when an aerodynamic fin moved to a hardover position as the result of an electronic component failure. These problems were corrected and the abort test program was completed.

Minor spacecraft design deficiencies in the parachute reefing cutters, the drogue and main parachute deployment mortar mountings, and the command module/service module umbilical cutters were found and corrected before the manned Apollo flights began. However, all command modules flown achieved satisfactory landing conditions and confirmed that, had they been manned spacecraft, the crew would have survived the abort conditions.

## 4.3 COMMAND AND SERVICE MODULE DEVELOPMENT PROGRAM

### 4.3.1 Introduction

The Apollo program was, from the outset, planned as a multiphase program with each phase serving, to the extent possible, as qualification for subsequent phases. The phases were planned to overlap and were originally defined as follows.

The first phase was limited to manned, low-altitude, earth-orbital flights using a Saturn I launch vehicle. Contractor and subcontractor efforts emphasized detail design and analysis, preparation of detail specifications, development of special manufacturing techniques, and the fabrication of breadboards and flight test hardware. The spacecraft was designed to be capable of lunar landing and return.

The second phase consisted of circumlunar, lunar-orbital, and parabolic entry test flights using the Saturn-V-type launch vehicle for the purpose of further development of the spacecraft and operational techniques and for lunar reconnaissance.

The third phase consisted of manned lunar landing and return missions using either Nova-class launch vehicles or Saturn-V-type launch vehicles.

The spacecraft design concept at the initiation of the Apollo program was a vehicle capable of descending directly to the lunar surface. Thus, the decision in 1962 to use the lunar rendezvous technique had a major impact on the design. Since the direct landing capability was no longer needed, the propulsion requirements were changed to provide only for midcourse corrections, lunar-orbit insertion, and transearth injection. The new mission profile also necessitated revisions to the command module to incorporate provisions for rendezvous and docking with a lunar module and crew transfer between vehicles.

During the early conceptual design period, the need for a number of additional changes became evident. For instance, the original concept of employing a land landing system on the command module was discarded in favor of a water landing system, and the heat shield design was changed from one utilizing ablative tiles to one in which honeycomb cells were filled with ablative material. Because of the complexity of the program, the state-of-the-art development, and concurrent activities, these and other changes could not be accommodated with the existing facilities, test equipment, and special skills. As a result, a program definition study was conducted in 1964 to define the functional realignment of the command and service module systems that was mandatory for the lunar mission vehicles. The results dictated a two-phase development program whereby the command and service module would first be developed without the lunar mission capability (Block I) and subsequently redesigned to accommodate the lunar module and other systems advancements (Block II). The purpose in dividing the program was to test the basic structure and systems as quickly as possible, while providing the time and flexibility to incorporate changes. Thus, in addition to the incorporation of equipment for lunar missions, Block II spacecraft contained a great number of refinements and improvements of systems and equipment. Some of these were the result of continuing research, whereas some evolved from unmanned flights and ground tests.

### 4.3.2 Block I and Block II Hardware

4.3.2.1 Boilerplate spacecraft.- The first vehicles used in the test program were known as boilerplate spacecraft. These were pre-production spacecraft that were similar to their production counterparts in size, shape, mass, and center of gravity. These vehicles were used for parachute research and development, water drop tests, studies of stability characteristics, vibration tests, flight tests, and other purposes leading to the proper design and development of the actual spacecraft and its systems. Each boilerplate was equipped with instrumentation to permit recording of data for engineering study and evaluation.

4.3.2.2 Block I spacecraft.- The Block I spacecraft were limited-production flight-weight spacecraft used for flight systems development and qualification. The initial missions were conducted to verify production spacecraft structural integrity, systems operation, and systems compatibility. After the structure and systems tests were completed, a series of unmanned flight missions was conducted to confirm the compatibility of the spacecraft and launch vehicle and to evaluate prelaunch, mission, and postmission operations. A manned Block I spacecraft mission (originally designated AS-204 and later designated Apollo I) was planned to confirm the compatibility of the spacecraft and crew; however, the spacecraft was destroyed during a prelaunch test on January 27, 1967, and the crew, astronauts Virgil I. Grissom, Edward H. White II, and Roger B. Chaffee, were lost in the resulting fire. While an investigation of the accident was being conducted and corrective actions taken, there was a hiatus of about 18 months before another manned mission was ready.

4.3.2.3 Block I ground test vehicles and fixtures.- One boilerplate and several spacecraft modules were used in various ground tests at the manufacturer's facility and at the Manned Spacecraft Center to provide data on systems performance prior to flight testing.

Service propulsion system ground testing was accomplished with three test fixtures. The fixtures were unique platforms for the tests and were fully instrumented to record engine and propellant system performance through varied operating ranges. A service module having a complete flightworthy service propulsion system and electrical power system was used to demonstrate that the service module was compatible with all interfacing systems and structure and to evaluate the performance of the service propulsion system.

4.3.2.4 Block II spacecraft.- The command and service modules used for all manned missions were of the Block II design (fig. 4-5). Although similar to the Block I spacecraft, a number of changes were made as a result of the program definition study of 1964 and the Apollo I fire in 1967. The major changes are listed in table 4-II. Design changes continued to take place throughout the program as studies and analyses progressed, as hardware failures occurred, and as new requirements developed. Major modifications were made for the final three missions because of expanded requirements for scientific data acquisition from lunar orbit. While these modifications were being implemented, the investigation accruing from the cryogenic oxygen system failure experienced on Apollo 13 dictated additional changes. These changes are also summarized in table 4-II.

4.3.2.5 Block II ground test program.- A considerable number of ground tests were conducted in support of the Block II changes. The test program was not formulated all at once but, rather, was developed over a period of several years as the spacecraft design was reevaluated. The test program embraced the original concept of minimizing flight tests and maximizing ground tests.

## 4.4 COMMAND AND SERVICE MODULE SYSTEMS DEVELOPMENT AND PERFORMANCE

### 4.4.1 Introduction

Significant aspects of the development and flight performance of individual command and service module structures and systems are summarized in this section. Brief descriptions of the systems are given where necessary but are not generally included. Complete descriptions of the boilerplate and Block I spacecraft systems are given in references 4-1 through 4-12. The initial Block II command and service module is described in reference 4-13, and subsequent changes are noted in references 4-14 through 4-23. The topics discussed, in some cases, have been treated in greater detail in other individual reports and these are referenced where appropriate.

### 4.4.2 Structures

The boilerplate flight test vehicles were designed primarily to demonstrate the capability of the launch escape system and to obtain aerodynamic flight data. Therefore, design requirements were to sustain ground and flight loading environments and to present a configuration similar to that of the production flight articles. The Block I and Block II flight spacecraft were designed to sustain normal flight, entry, and recovery loadings, and to provide protection from meteoroids, radiation, and thermal extremes.

Most of the problems encountered in the development and verification of the structure were discovered in the ground test program when the structure failed to meet specified criteria, environment, or loads. Each failure was carefully analyzed, and the specific test criteria were reassessed. In some cases, the reassessment revealed that the test conditions were too severe and should be changed to more realistic conditions. In other cases, structural inadequacies that required design changes were identified. Some modifications were retested, whereas others were certified by analysis. Many of these structural failures were due to inaccurate predictions of load paths and load distribution. The capability of structural analysis methods improved continually during the Apollo program. The structural aspects of the ground and flight test programs as well as significant problems encountered in the test programs and their resolutions are discussed in reference 4-24.

On the Apollo 6 mission, a local structural failure of the spacecraft/lunar module adapter occurred during first-stage boost (ref. 4-12). Approximately 2 minutes 13 seconds after lift-off, abrupt changes of strain, vibration, and acceleration were indicated by onboard instrumentation. Photographs showed objects falling from the area of the adapter; however, the adapter continued to sustain the required loads.

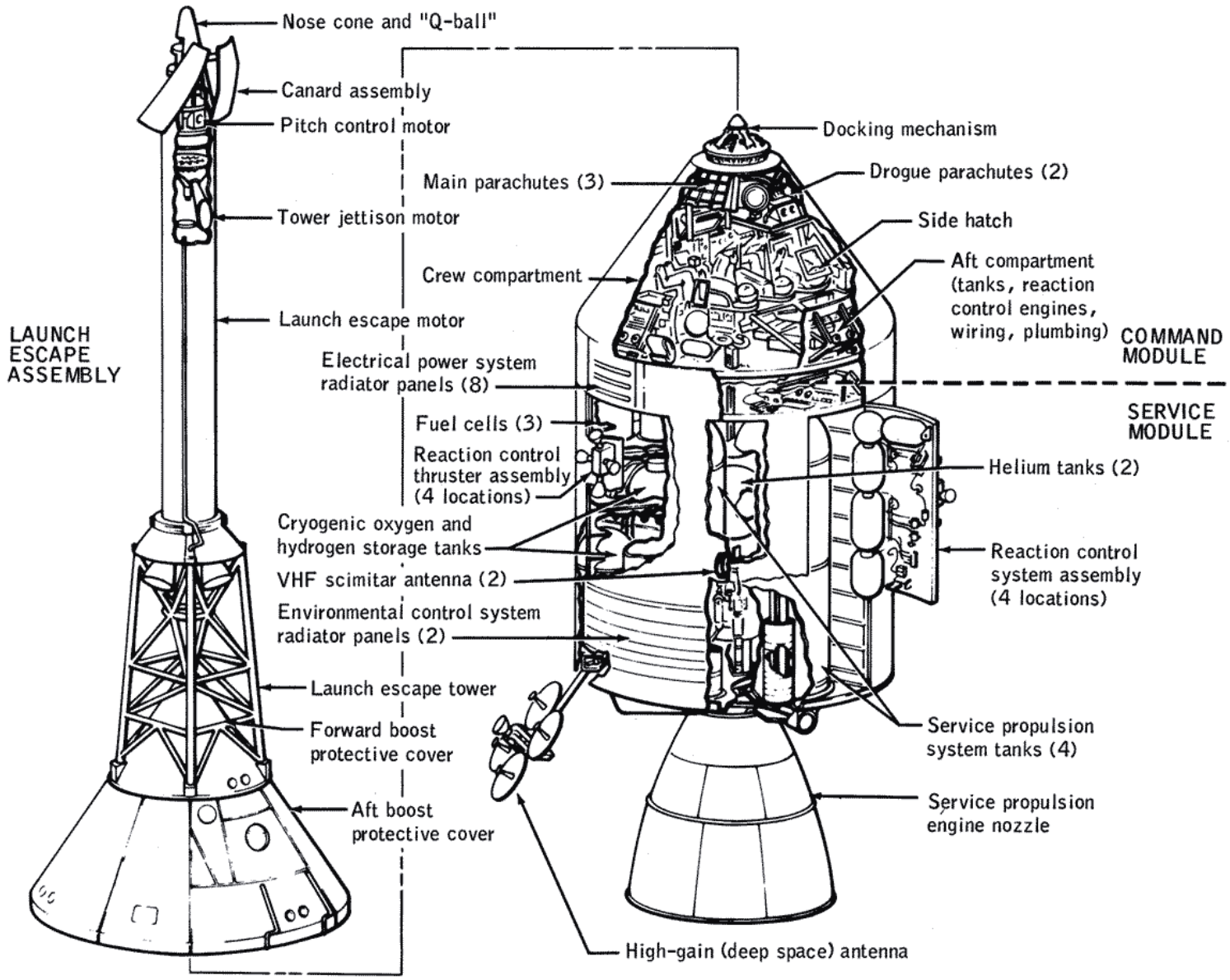


Figure 4-5.- Command and service modules and launch escape system.

TABLE 4-II.- SUMMARY OF MAJOR CHANGES
TO COMMAND AND SERVICE MODULE

| Function/system | Changes |
|---|---|
| Changes Resulting From Program Definition Study | |
| Structures and thermal protection | Forward tunnel structure changed to accomodate docking mechanism and lunar module/command module umbilicals added<br>Antenna protuberances removed from command module<br>Parachute attachment redesigned<br>Command module/service module umbilical relocated<br>Equipment rearranged in service module to provide an empty bay in sector I for later installation of scientific instrument module<br>Micrometeoroid protection added to service module<br>Extravehicular activity provisions incorporated<br>Boost protective cover added<br>Heat shield ablator thickness reduced |
| Mechanical systems | Docking mechanism added<br>Earth landing system capability improved<br>Unitized couch changed to foldable type and impact attenuation system improved |
| Thermal control | Changes incorporated for use of passive thermal control |
| Environmental control | Radiator size increased<br>Selective fluid (water/glycol) freezing and thawing used to accomodate variable heat loads and external environment |

TABLE 4-II.- SUMMARY OF MAJOR CHANGES
TO COMMAND AND SERVICE MODULE - Continued

| Function/system | Changes |
|---|---|
| Changes Resulting From Program Definition Study - Continued | |
| Communications and instrumentation | VHF transceiver redesigned<br>C-band transponder deleted<br>HF recovery transceiver and antenna deleted<br>Electronics packages hermetically sealed with built-in and switchable redundancy |
| Guidance, navigation and control | Smaller, lighter, and more reliable system used<br>Electronics packages hermetically sealed with built-in and switchable redundancy<br>New entry monitor system scrolls incorporated<br>Flight director attitude indicator redesigned |
| Propulsion | Service module reaction control system propellant storage capacity increased<br>Size and thickness of service propulsion tanks reduced<br>Service propulsion system main propellant valve control redesigned |
| Sequential events control | Reliability of events controllers improved<br>Motor switches, instead of relays, used to arm pyrotechnic bus<br>Events controllers added to accomodate lunar module |
| Crew equipment | Rendezvous and docking aids provided |

TABLE 4-II.- SUMMARY OF MAJOR CHANGES
TO COMMAND AND SERVICE MODULE - Continued

| Function/system | Changes |
|---|---|
| Changes Following Apollo I Fire | |
| Mechanical | Unitized, quick-opening side hatch incorporated<br>Earth landing system modified to withstand opening loads resulting from increased command module weight<br>Uprighting system redesigned as a result of change in the command module center of gravity |
| Environmental control | Provisions made for nitrogen/oxygen cabin atmosphere prior to launch<br>Rapid cabin repressurization system added<br>High pressure lines changed from aluminum to stainless steel, and joints welded instead of soldered |
| Electrical | Wiring protection added<br>Harnesses rerouted |
| Crew station | Use of nonflammable materials expanded |
| Changes Implemented as a Result of the Apollo 13 Abort | |
| Cryogenic storage | Oxygen tank redesigned<br>Third oxygen tank installed<br>Isolation valve installed between oxygen tanks 2 and 3<br>Controls and displays added |
| Electrical | Lunar module descent stage battery added for emergency power<br>Fuel cell reactant shutoff valves relocated |
| Crew equipment | Contingency water storage system added |

TABLE 4-II.- SUMMARY OF MAJOR CHANGES
TO COMMAND AND SERVICE MODULE - Concluded

| Function/system | Changes |
|---|---|
| Changes Implemented for Apollo 15 and Subsequent Missions | |
| Structural | Scientific instrument module installed<br>Extravehicular handholds and restraints installed |
| Mechanical systems | Experiment deployment devices added to the service module |
| Cryogenic storage | Third hydrogen tank installed |
| Environmental control | Components added to accomodate extra-vehicular activity |
| Communications and instrumentation | Scientific data system integrated with existing telemetry system |
| Crew station | Controls and displays added<br>Additional stowage provided |

Extensive study of the photography and other evidence indicated that a large area of the adapter had lost inner facesheet from the honeycomb sandwich panels. Loads and stresses resulting from vibration were determined to be insufficient to initiate such a failure. The investigation was then directed toward determining the range of pressures that could have been trapped in the Apollo 6 adapter sandwich panels, and toward determining the tolerance of the panels to withstand pressure with various degrees of flaws such as adhesive voids and facesheet dents. The degradation effects of moisture and heat exposure on the adhesive strength were also studied and tested. These tests and analyses led to the conclusion that pressure internal to the sandwich panels could have caused the failure, if a large flaw existed. The pressure buildup would have been caused by aerodynamic heating effects on air and moisture trapped in the panel.

The most probable cause of the failure was an abnormal splice assembly, resulting in a facesheet bond too weak for the internal pressure achieved. Sufficient information was developed to verify that deficient assembly techniques had resulted in abnormalities along a panel splice in several of the adapters to be used on subsequent flights.

Before the splice abnormalities were pinpointed, corrective action was taken to reduce pressure buildup in the honeycomb panels and to reduce heat degrading effects on the adhesive. This was done by drilling vent holes in the inner facesheet and covering the outer facesheet with cork. The adapters having splice abnormalities were repaired, and an internal splice plate was eliminated to allow more accurate inspection.

### 4.4.3 Thermal Management Systems

Management of temperatures within the limits necessary for proper spacecraft systems operation and human occupancy was accomplished by three separate systems: the environmental control system, the thermal control system, and the thermal protection system. The environmental control system is discussed in section 4.4.9. It contained a water/glycol flow system which transferred heat to radiators located on the service module surface and a water boiler for the sublimation of water in the space environment. These functioned as a thermodynamic unit to maintain a habitable cabin thermal environment and to cool electronic equipment located within the cabin. The thermal control system regulated temperatures of the structure and components outside the pressure vessel. The thermal protection system consisted of components which protected the cabin and crew from the entry environment.

Both active and passive means of temperature management were utilized. The active means consisted primarily of the water/glycol flow system and water boiler used for environmental control, as well as electrical heaters. The passive means included: ablative materials that accommodated high heating rates, thermal control coatings, insulations, heat sink materials, and spacecraft orientation.

4.4.3.1 Thermal protection.- The lunar return trajectory of the Apollo spacecraft resulted in an atmospheric entry inertial velocity of over 36 000 feet per second, and this created an aerodynamic heating environment approximately four times as severe as that experienced by either the Mercury or Gemini spacecraft. The induced thermal environment resulting from such an entry necessitated the installation of a heat shield on the command module capable of sustaining, without excessive erosion, the temperatures caused by the high heating rates on the blunt face of the vehicle while preventing excessive substructure temperatures. The concept initially considered consisted of ablative tiles made from phenolic-nylon material bonded to a honeycomb-sandwich substructure made of aluminum. However, in April 1962, recovered heat shields from Mercury spacecraft were found to have experienced debonding of tiled ablative material, and an alternative study was conducted of the ablator insulation method being successfully demonstrated at that time on the Gemini spacecraft. The Gemini heat shield consisted of a fiberglass honeycomb core filled with an elastomeric ablator. Initially, the cells were filled with the ablator by a tamping process, but this caused concern with respect to quality assurance, and the composition of the ablative material was modified so that it could be gunned in a mastic form into the honeycomb cells. Stainless steel was chosen for the substructure in preference to aluminum because of the increased safety provided by the higher-melting-point alloy in the event of a localized loss of ablator.

Unmanned flights provided test verification of the thermal protection system for earth-orbital and lunar-return missions. The measured data obtained from these flights (table 4-III) and from the first two manned flights were used to correlate the analytical models used for the required certification analysis.

Table 4-IV is a summary of the actual entry conditions for the Apollo 8 mission and the Apollo 10 through 17 missions. As indicated in the table, the maximum downrange entry distance was 1497 miles compared with the established Block II design requirement of 3500 miles. The shorter downrange entry distance resulted in a maximum integrated heat load of 28 000 Btu/sq ft, which was appreciably less than the design requirement of 44 500 Btu/sq ft.

4.4.3.2 Thermal control.- The evolution of the thermal control system revealed that mission operational constraints could be used to minimize weight and power requirements. The original concept was that the spacecraft should be insensitive to attitude and position in space. However, unconstrained operational attitudes dictated system design for the worst-case mission environment, which would then have involved the use of such devices as multiple cooling loops and large heaters. The consequences would have been increased spacecraft weight and larger propellant expenditures. After consideration of all aspects of the mission, a plan was developed which made optimum use of the natural space environment to provide passive temperature control. The spacecraft longitudinal axis was aligned normal to the direction of the solar radiation and the spacecraft was rotated about this axis at a nominal rate of 3 revolutions per hour during the translunar and transearth coast phases; the alignment and rotational operations were termed the passive thermal control mode. Another passive thermal control mode was used during sleep periods while in lunar orbit. The command and service module was held in an orientation with solar radiation impinging directly on reaction control system quad B. (The service propulsion system oxidizer sump tank adjacent to quad B acted as a thermal sink.) Utilization of these modes permitted the definition of a large operational envelope in which the spacecraft could function and was used in the planning of each mission to define the thermodynamically related constraints on the vehicles. The flight plan for a nominal mission placed the vehicle in the center of the design envelope in order to maximize its capability to accommodate mission contingencies.

During the evolution of the thermal control design, many tests were conducted to determine insulation performance and installation techniques, thermal control coating properties, coating application processes, thermal shielding performance, and shielding manufacturing techniques. Additional tests were performed to determine the environment to which these materials would be exposed such as rocket engine plume characteristics and aerodynamic heating rates. The results of these tests were used in the development of the thermal mathematical models utilized to determine the adequacy of each thermal control design concept. It was necessary, however, to verify the many assumptions and engineering idealizations which were made in order that the interdependency of the spacecraft structure and systems could be adequately mathematically represented.

Full-scale thermal vacuum tests were performed to provide a means of verifying the spacecraft thermal control system design and the adequacy of the mathematical models used for thermal analysis. Two integrated command and service module prototypes were tested in a thermal vacuum chamber at the Manned Spacecraft Center. Both prototypes (SC-008 and 2TV-1) were exposed to combinations of hot and cold soaks in addition to passive thermal control rolling modes while manned with all systems except the propulsion system operating. In general, the assumptions made in the thermal analyses were found to be conservative (i.e., the measured maximum and minimum temperatures were within the predicted extremes).

No serious problems or anomalies were associated with the thermal control and thermal protection systems on the earth-orbital and lunar missions. The success of the systems can be attributed to the somewhat conservative design philosophy that was adopted and to the rigorous analytical and test certification requirements that were imposed. More detailed information on thermal protection during launch and entry may be found in references 4-25 and 4-26.

TABLE 4-III.- FLIGHT VERIFICATION OF THE THERMAL PROTECTION SYSTEM

| Entry conditions | Mission | | | |
|---|---|---|---|---|
| | AS-201 | AS-202 | AS-501 | AS-502 |
| Inertial velocity at entry, ft/sec . . . . . | 26 482 | 28 512 | 36 545 | 32 830 |
| Relative velocity at entry, ft/sec . . . . . | 25 318 | 27 200 | 35 220 | 31 530 |
| Inertial flight-path angle at entry, deg . . | -8.60 | -3.53 | -6.93 | -5.85 |
| Range flown, miles . . . . . | 470 | 2295 | 1951 | 1935 |
| Entry time, sec . . . . . | 674 | 1234 | 1060 | 1140 |
| Maximum heating rate, $Btu/ft^2/sec$ . . . . . | 164 | 83 | 425 | 197 |
| Total reference heating load, $Btu/ft^2$ . . . | 6889 | 20 862 | 37 522 | 27 824 |

TABLE 4-IV.- SUMMARY OF ENTRY CONDITIONS FOR OPERATIONAL LUNAR MISSIONS

| Entry conditions | Mission | | | | | | | | |
|---|---|---|---|---|---|---|---|---|---|
| | Apollo 8 | Apollo 10 | Apollo 11 | Apollo 12 | Apollo 13 | Apollo 14 | Apollo 15 | Apollo 16 | Apollo 17 (a) |
| Inertial velocity at entry, ft/sec . . . . . | 36 221 | 36 314 | 36 194 | 36 116 | 36 211 | 36 170 | 36 096 | 36 090 | 36 090 |
| Relative velocity at entry, ft/sec . . . . . | 35 000 | 34 968 | 35 024 | 34 956 | 34 884 | 34 996 | 34 928 | 35 502 | 35 502 |
| Inertial flight-path angle at entry, deg . . . . . | -6.48 | -6.54 | -6.98 | -6.50 | -6.49 | -6.37 | -6.51 | -6.49 | -6.49 |
| Lift-to-drag ratio . . . . . | 0.300 | 0.305 | 0.300 | 0.309 | 0.291 | 0.280 | 0.290 | 0.286 | 0.290 |
| Range flown, miles . . . . . | 1292 | 1295 | 1497 | 1250 | 1250 | 1234 | 1184 | 1190 | 1190 |
| Entry time, sec . . . . . | 868 | 871 | 929 | 815 | 835 | 853 | 778 | 814 | 801 |
| Maximum heating rate, $Btu/ft^2/sec$ . . . . . | 296 | 296 | 286 | 285 | 271 | 310 | 289 | 346 | 346 |
| Total reference heating load $Btu/ft^2$ . . . . . | 26 140 | 25 728 | 26 482 | 26 224 | 25 710 | 27 111 | 25 881 | 27 939 | 27 939 |

[a]Data shown are preflight predictions. Actual data were not obtained.

### 4.4.4 Mechanical Systems

The major mechanical systems incorporated in the command and service modules are discussed in this subsection.

4.4.4.1 Earth landing system.- The earth landing system consisted of three main parachutes, two drogue parachutes, a forward heat shield separation augmentation parachute, and related electromechanical and pyrotechnic actuation components required to decelerate and stabilize the command module to conditions that were safe for landing after either a normal entry or a launch abort. The recovery sequence was initiated automatically by the closure of barometric pressure switches or by manual initiation of time-delay relays.

In addition to stringent program requirements, several specific technical problems, the solution of which required the development of innovative methods and techniques, were encountered. The most severe problem was a continual increase in command module weight. This condition resulted in a major program of redesign and requalification of the Block II earth landing system. The command module weight increases and certain program events are depicted in figure 4-6.

The first three Block I developmental aerial drop tests (single parachutes) were conducted with a parachute constructed from lightweight material and having a minimum of reinforcing tapes. Because major damage was sustained on two of the three tests and because of the first announcement of a command module weight increase, the first modification was made to strengthen and to improve the main-parachute design. The initial changes increased the strength of the structural members of the parachute. These changes caused a significant increase in parachute weight, and the attendant bulk created new problems because limited stowage volume was available. Shortly after the start of main-parachute-cluster tests, modifications had to be made to the main parachutes to change their opening characteristics to achieve more evenly balanced load sharing among the three parachutes, thereby reducing the peak opening loads.

By the time qualification testing of the Block I earth landing system was completed, each system of the spacecraft had progressed to the point that accurate total weight estimates were available. Although the maximum projected weight for a Block II spacecraft was more than the specification value, the overweight condition was not sufficient to justify major design changes in the earth landing system. Therefore, the Block II parachute qualification program was pursued as a minimum-change effort.

During the months immediately following the Apollo I fire, numerous modifications were made to the command module. By mid-April 1967, weight estimates indicated that the projected spacecraft weight had increased to a value greater than that at which the earth landing system could recover the command module with an acceptable factor of safety. The implemented solution consisted of increasing the size of the drogue parachutes and of providing the existing main parachutes with an additional reefing stage. The two changes ensured an adequate factor of safety for the parachutes and the command module structure at the projected recovery weight of 13 000 pounds. Larger drogue parachutes on the heavier command module reduced the dynamic pressure at drogue disconnect/pilot mortar fire to a level near that obtained with the smaller drogue parachutes on the lighter spacecraft. The additional reefing stage in the main parachutes reduced the individual and total main-parachute loads to values no greater than the design loads for an 11 000-pound command module.

In addition to resolving difficult design problems, devising and optimizing component manufacturing and assembling techniques were also necessary to ensure that each part would function properly once it was assembled and installed on the spacecraft. None of the previous space programs required the high density of parachute packing to suit the allotted volume that was necessary in the Apollo program. This requirement necessitated the development of precise techniques for packing the parachutes at very high densities without inflicting damage to the parachute system during packing or deployment. Substitution of steel cables for nylon risers in the parachute system required the development of stowage techniques that provided safe deployment of the cable.

Modifications or procedural changes were made several times in the program because of potentially hazardous conditions that were discovered during mission operations. On the AS-201 mission, the forward heat shield jettisoning system did not provide sufficient energy to thrust the heat shield through the wake of a stabilized command module. To ensure separation, a conventional

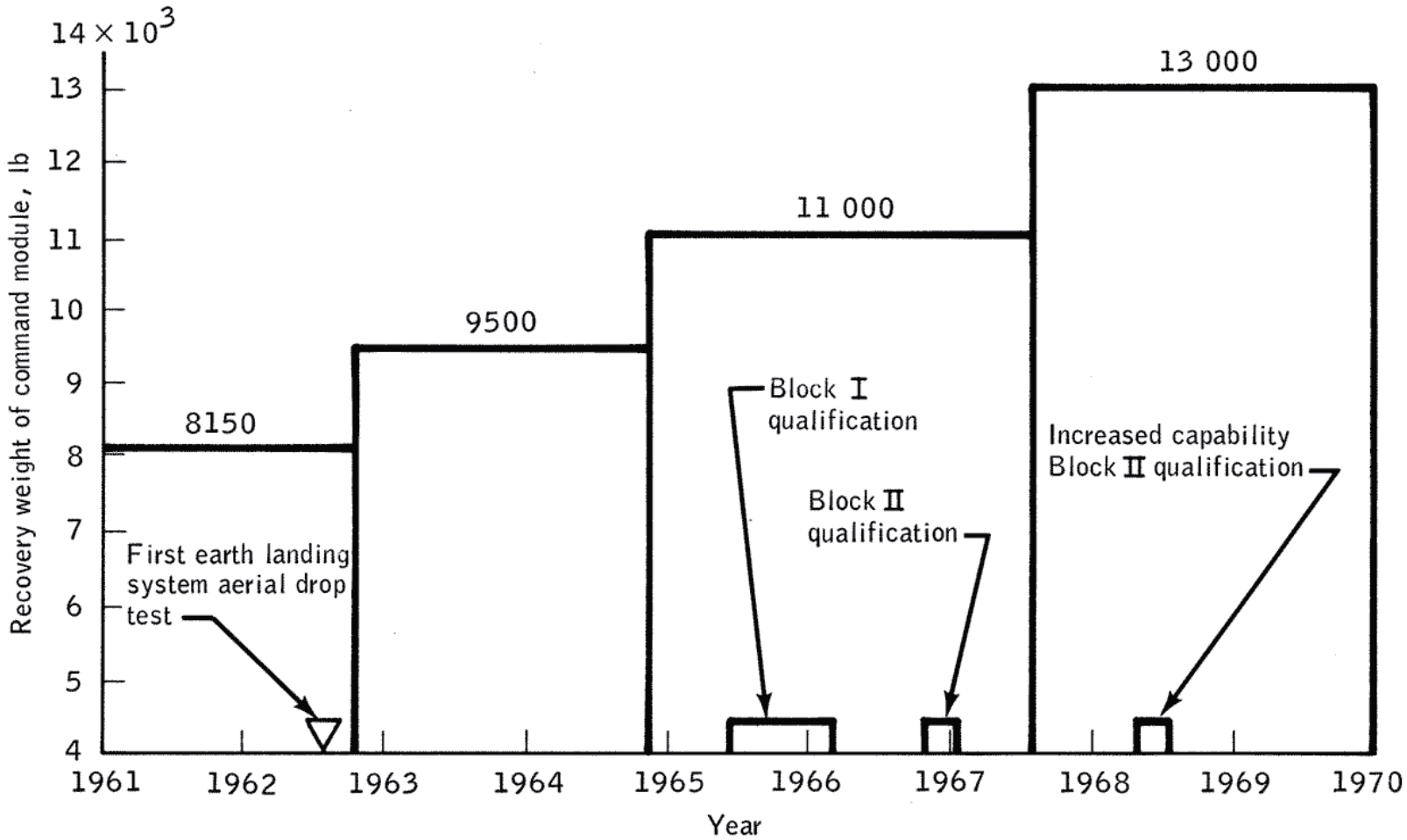


Figure 4-6.- Increases in command module recovery weight.

pilot parachute mortar assembly was mounted in the forward heat shield and was activated by the same signal that initiated the forward heat shield jettisoning devices. On Apollo 4, small burn holes were found in the canopy of a recovered main parachute. Investigation showed that the holes were caused by oxidizer expelled from the command module reaction control system during descent. The condition was corrected by controlling the ratio of fuel to oxidizer loaded on the command module to ensure that the oxidizer would be depleted before the fuel. Although the fuel (monomethylhydrazene) does not degrade nylon, the excess fuel condition was later found to be hazardous as well. One of the main parachutes collapsed during final descent of the Apollo 15 command module. Investigation showed that the most probable cause of the failure was burning fuel coming in contact with the parachute fabric riser. This condition was corrected on the final two missions by retaining excess propellants aboard the command module for normal landings. Also, the propellants were loaded so that there was a slight excess of oxidizer to allow for the low-altitude abort possibility. These problems are discussed in greater detail in references 4-27 and 4-28.

4.4.4.2 Docking mechanism.- The announcement that the lunar landing mission would be accomplished by using the lunar orbit rendezvous technique established the requirement for a docking system that would provide for joining, separating, and rejoining two spacecraft, as well as allowing intravehicular crew transfer. In addition, the Apollo program schedules required that a docking system be selected approximately 2 years before the first Gemini docking mission.

Many design concepts were evaluated, including the Gemini design which was rejected because of its weight. Types of the designs considered included both impact, or "fly-in," systems and extendible systems. The type selected was an impact system consisting of a probe mounted on the forward end of the command module and a drogue installed on the lunar module. The configuration of the Apollo docking system is shown in figure 4-7.

Design of the Apollo docking system began in December 1963 and evolved through a rigorous program of development tests, performance analyses, design studies, and qualification tests. Although many problems were encountered during the development period, most were relatively minor.

Perhaps the primary disadvantage of the system was that it blocked the crew transfer tunnel and, therefore, had to be removable. The original design philosophy had been to simplify the design and reduce the weight of the system. This required that all functions be performed manually by the crew using a special tool or wrench. However, to meet a subsequent requirement to simplify the crew/hardware interface, the complexity of the probe was increased by providing integral, low-force actuation devices, thus reducing the number of manual tasks. These changes were implemented in 1967, after the development test program and after some of the qualification tests of the basic probe assembly had been performed. The development and testing of the system are described in greater detail in reference 4-29.

The docking system was used successfully on nine Apollo missions, as planned. Docking system anomalies occurred only on the Apollo 9 and Apollo 14 missions. During the Apollo 9 mission, difficulties were encountered in undocking the command module from the lunar module and in preparing for lunar-module-active docking. Postflight ground testing demonstrated that both conditions were related and were inherent normal features of the docking probe. The undocking procedure was modified to preclude recurrence of these difficulties. On the Apollo 14 mission, six docking attempts were required to successfully achieve capture latch engagement during the translunar docking phase of the flight. Although the docking system performed successfully for the remainder of the mission, the docking probe was stowed in the command module after lunar orbit rendezvous and was returned with the command module so that a thorough investigation could be conducted. The results of the investigation disclosed two possible causes for the docking problem — one related to the design and one attributed to foreign material restricting mechanical operation. Although a minor design modification was incorporated to preclude such a failure mode for future missions, most evidence indicated that foreign material was the cause of the Apollo 14 anomaly. Additional details of these anomalies are given in references 4-29 and 4-30.

4.4.4.3 Crew support/restraint and impact attenuation systems.- These systems consisted of (1) a three-man couch assembly used to physically support the crew, especially during launch, entry, and landing; (2) a restraint system with a single buckle release; and (3) a shock attenuation system that held the couch in position throughout a mission but allowed couch movement if landing impact forces exceeded a safe level. The attenuation system was developed, primarily, to protect the crewmen in the event of a land landing.

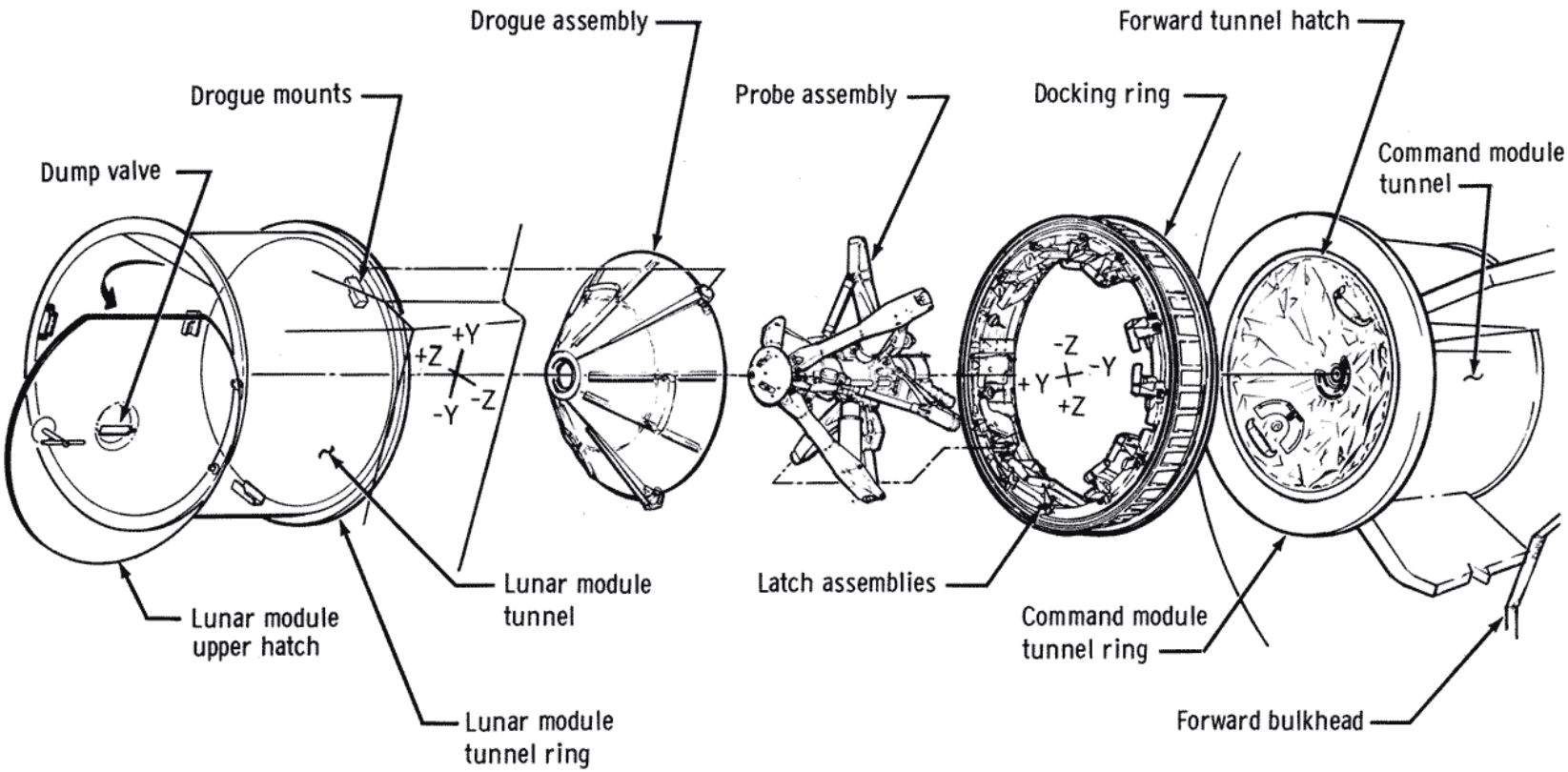


Figure 4-7. - Major assemblies of the docking system.

The original design requirements for the couch and restraint system were based upon the premise that the crewman should be held as rigidly as possible, the then existing philosophy of human impact protection. The prototype couch designed according to this philosophy was excessively massive and impaired the crew's inflight mobility. Subsequent testing reduced the requirement for rigid restraint of the crewman within the deceleration loads specified for the Apollo spacecraft crew couch. The result was a change from the contoured couch concept used in Mercury and Gemini to a universal couch that would fit all crewmen within the 10th- to 90th-percentile sizes. The first couch designed to the new requirements was flown on the Apollo 7 mission.

The Block II redefinition of the Apollo spacecraft emphasized the requirements for more work volume to allow an increase in intravehicular mobility and an open center aisle for side-hatch extravehicular activity by a suited crewman wearing a portable life support system. These requirements could not be met without a major redesign of the unitized couch. Therefore, a new foldable couch was developed and used for all manned missions after Apollo 7.

During the Block II redefinition, because the location of the launch pad and the height of the launch vehicle resulted in a high probability of a land landing from a launch pad abort or a very low altitude abort, the crew couch was made to provide crew protection for land landing. Because the command module did not have facilities for limiting the landing impact, attenuators were required to support the crew couch during all mission phases and to limit the energy transmitted to the crewmen during landing impact. Development efforts resulted in a double-acting, cyclic-strut attenuator which used a unique concept of cyclic deformation of metal to absorb energy. Energy absorption was accomplished by rolling a ring of metal between two surfaces with a separation distance of less than the diameter of the ring thereby causing the ring to continually deform as it rolled. More detailed information on the design of the attenuation system may be found in reference 4-31. Several drop tests were performed to provide a better understanding of the dynamics of the couch and attenuation systems. Data obtained from the tests permitted refinement of the initial impact load to an acceptable rate of acceleration for crew tolerance.

The folding, stowing, and reassembling of the couch in flight were achieved without problems on all missions except Apollo 9 and Apollo 16. During these missions, the crew had some difficulty in reassembling the center body support of the couch.

4.4.4.4 Uprighting system.- Early studies of the command module showed that it had two stable flotation attitudes: stable I (vehicle upright) and stable II (vehicle inverted). The stable II attitude could be attained either by landing dynamics or by postlanding sea dynamics. Allowing the command module to remain in the stable II attitude for more than several minutes was undesirable primarily because the postlanding ventilation system and the location aids were inoperative. The command module could not be configured to be self-righting and still maintain an acceptable aerodynamic lift-to-drag ratio. Therefore, a requirement was established to provide a means of uprighting the command module.

The selected design consisted of three inflatable bags located on the upper deck of the command module, two air compressors, and the associated plumbing and wiring. When use of the system was required, a crewman initiated inflation of the bags by turning on the air compressors. By this action, ambient air was pumped through a series of valves to each of the bags.

In addition to the overall weight increase, a center-of-gravity shift resulted from the changes made to the command module after the Apollo I fire. Full-scale performance definition tests required by these changes showed that the uprighting capability of the Block II command module was marginal with the two Y-axis bags inflated (one on each side of the upper deck as shown in fig. 4-8). Moreover, a combination of an inflated Y-axis bag and the Z-axis bag (on the side opposite the hatch) resulted in a roll of the command module about its X-axis to a new stable position where uprighting did not occur. Development tests were conducted at the Manned Spacecraft Center to investigate different suspension systems for the bags and to investigate the ability of a smaller Z-axis bag to reduce the roll problem and provide enough buoyancy to assure uprighting. Also, tests were performed to determine the feasibility of two crewmen lowering the center of gravity by moving from the couches to the aft deck. As a result of these tests, the uprighting system was redesigned to provide uprighting capability with any two bags inflated after two crewmen had moved aft. The final configuration was capable of uprighting the command

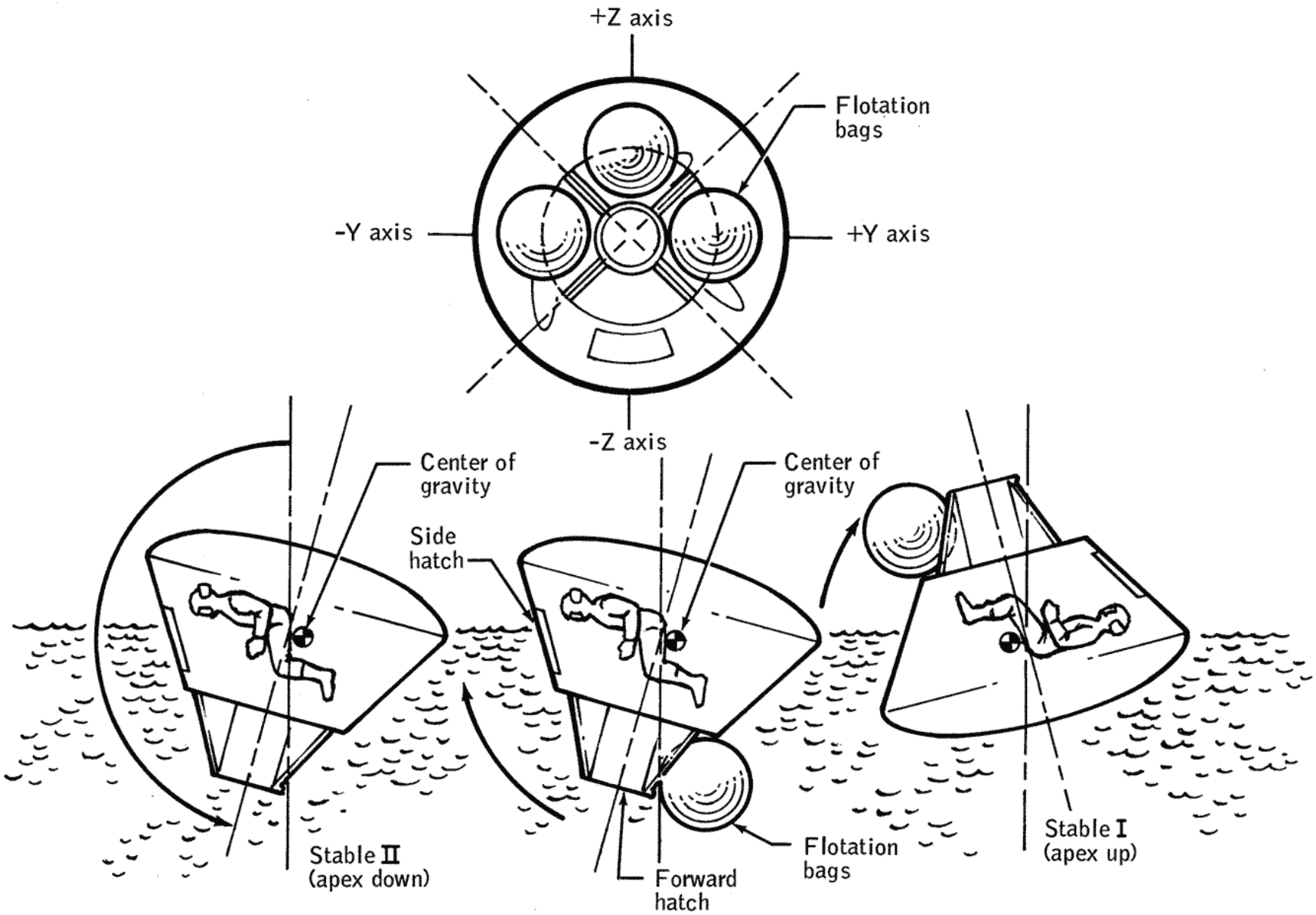


Figure 4-8.- Command module uprighting system.

module in 5 minutes if both compressors and all three bags were operative. With either a failed bag or compressor, 12 minutes was the maximum time required for uprighting. The system could not upright the command module if both a bag and a compressor failed.

The Block II spacecraft was much less stable during water landing than the Block I spacecraft. This lack of stability is attributed to the higher center-of-gravity locations at landing for the Block II spacecraft. All the Block II command module landing centers of gravity and attitudes are plotted on the uprighting capability curve shown in figure 4-9; also shown for reference is the center of gravity of the Block I command module flown on the Apollo 6 mission.

Five of the Block II spacecraft went to the stable II attitude and were uprighted by three bags in approximately 5 minutes. No problems with the system were encountered. The Apollo 7 command module would have been prevented from uprighting if one of the three bags had failed. While the vehicle was in the stable II attitude, water seeped through a faulty hatch valve, and the tunnel was flooded with approximately 400 pounds of water. As can be seen in figure 4-9, the flooded tunnel adversely affected the command module center of gravity; however, because all three bags inflated, the vehicle uprighted. The hatch valve design was changed for all subsequent spacecraft. Additional information on the development and performance of the uprighting system is given in reference 4-32.

4.4.4.5 Side access hatch.- The original Apollo spacecraft side hatch was configured as shown in figure 4-10. An outer ablative hatch provided thermal protection during entry through the earth's atmosphere and an inner pressure hatch sealed the cabin. With this two-hatch design, the hatches maintained the continuity of the structure for predicted loads, thereby reducing the vehicle weight. Although the hatch design fulfilled the program requirements relative to normal ingress-egress and emergency egress, the hatches were awkward to handle in a one-g environment since they were not hinged. In addition, there was no provision to open the inner hatch with the spacecraft pressurized. The tragedy of not having this requirement was demonstrated in the disastrous Apollo I fire.

In the period following the fire, the command module main hatch was redesigned to provide the single-piece, hinged, quick-opening hatch shown in figure 4-11. Although much heavier and more complex, the redesigned main hatch was used without difficulty on all of the Apollo manned missions. Details of the design and development of the hatch are given in reference 4-33.

4.4.4.6 Experiment deployment mechanisms.- To accommodate orbital science equipment on Apollo 15, 16, and 17, one section of the service module was modified to allow installation of a scientific instrument module. The modules for the three missions included a variety of equipment such as cameras and spectrometers. Two of the modules contained a deployable subsatellite. Deployment devices were developed for all three modules to move certain instruments away from the contamination cloud that surrounded the spacecraft or to extend antennas. Figure 4-12 is an artist's concept of the spacecraft in lunar orbit as configured for the Apollo 15 and 16 missions. Figure 4-13 shows the Apollo 17 spacecraft configuration. Problems experienced with several of the deployment mechanisms during flight are discussed in section 3.3.

### 4.4.5 Cryogenic Storage System

A multiple-tank cryogenic fluid storage system mounted in the service module provided gaseous oxygen and hydrogen to the fuel cell power generation system and metabolic oxygen to the crew via the environmental control system. The system for missions through Apollo 13 contained two oxygen tanks and two hydrogen tanks. This design provided for an emergency return to earth in the event of the loss of a hydrogen tank, an oxygen tank, or both. For Apollo 15, 16, and 17, a third tank was added for both hydrogen and oxygen storage to provide for more extensive operational requirements as well as the contingency requirement. The Apollo 14 system contained only two hydrogen tanks, but a third oxygen tank was added for redundancy after the failure of the Apollo 13 system.

The storage of cryogenic hydrogen and oxygen required judicious selection of pressure vessel materials. A materials screening program led to the selection of type 5Al-2.5 tin-titanium alloy for the hydrogen storage and Inconel 718 alloy for the oxygen storage. These materials were selected because they had attractive combinations of weight, strength, and ductility, and were compatible over the operating temperature ranges.

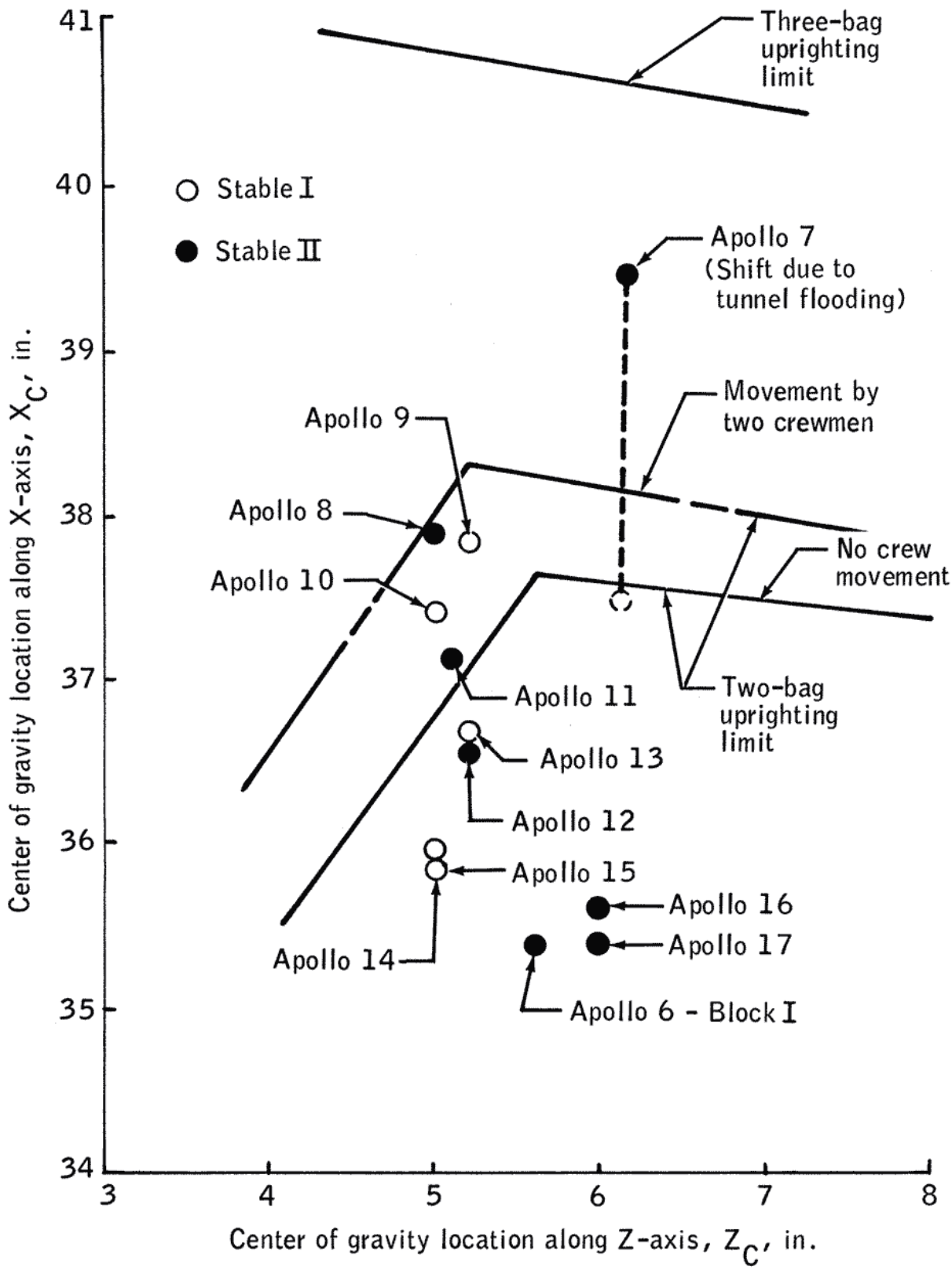


Figure 4-9.- History of landing center of gravity locations and landing attitudes.

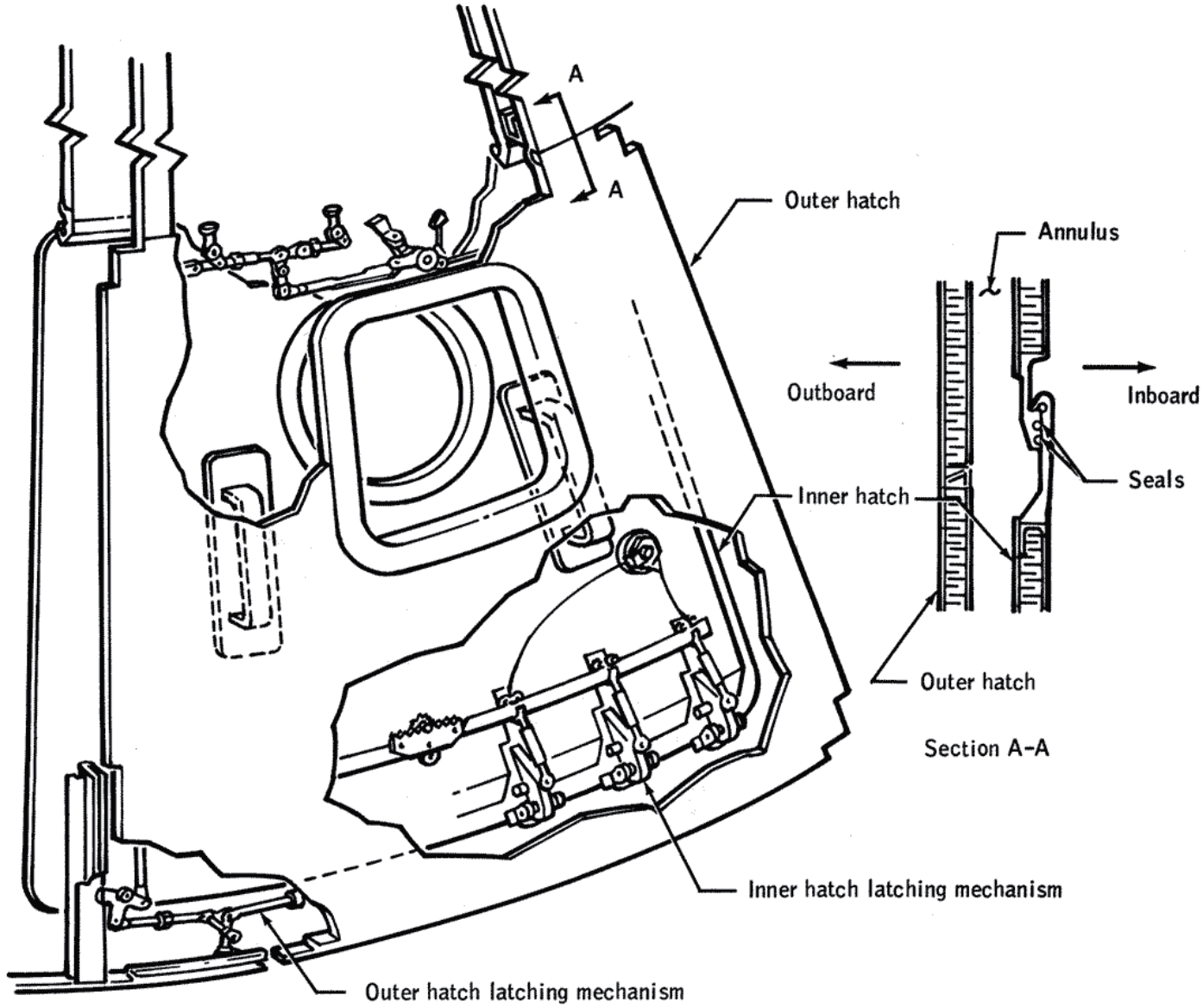


Figure 4-10.- Original side access hatch mechanism.

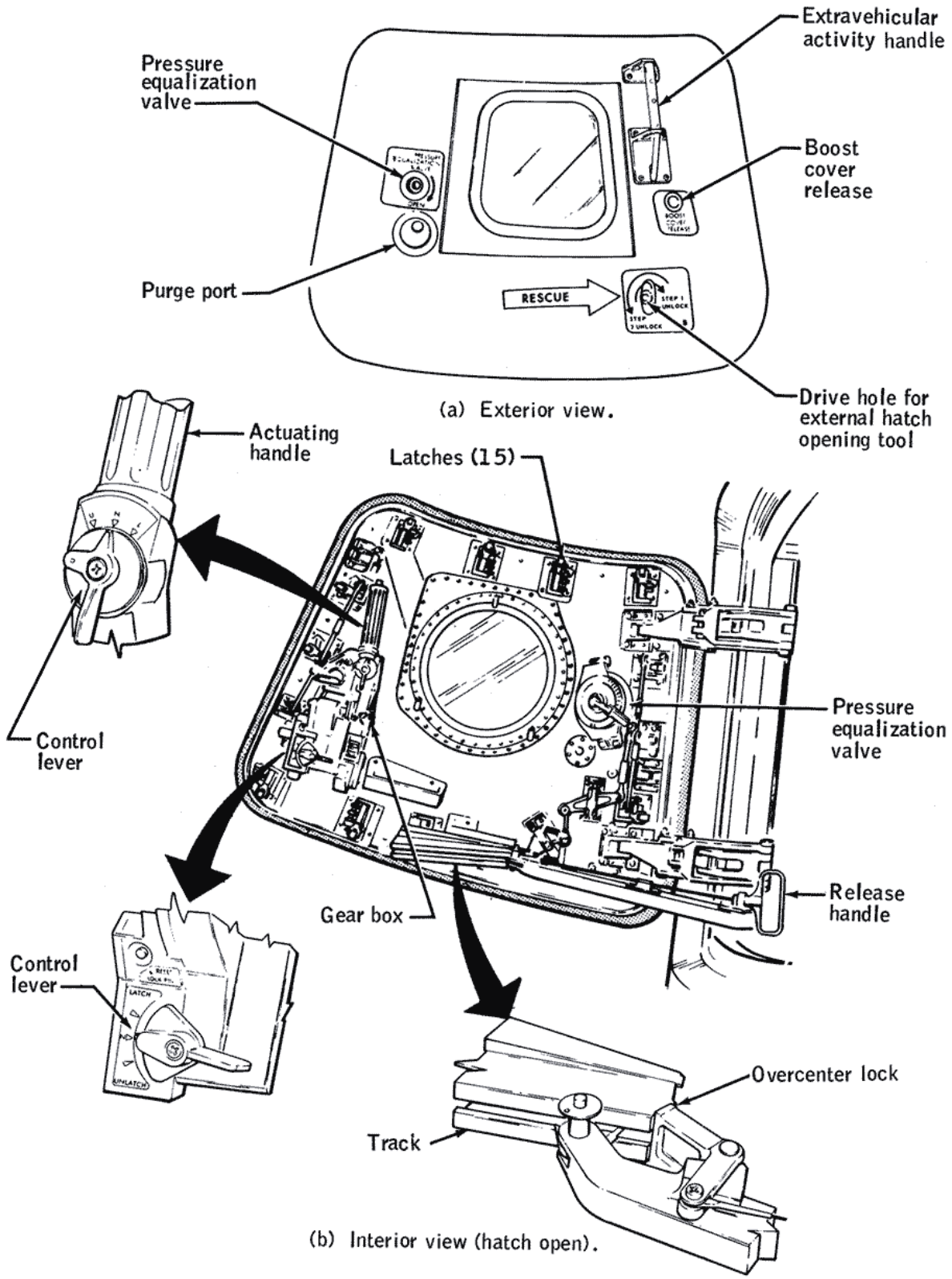


Figure 4-11.- Block II side hatch configuration.

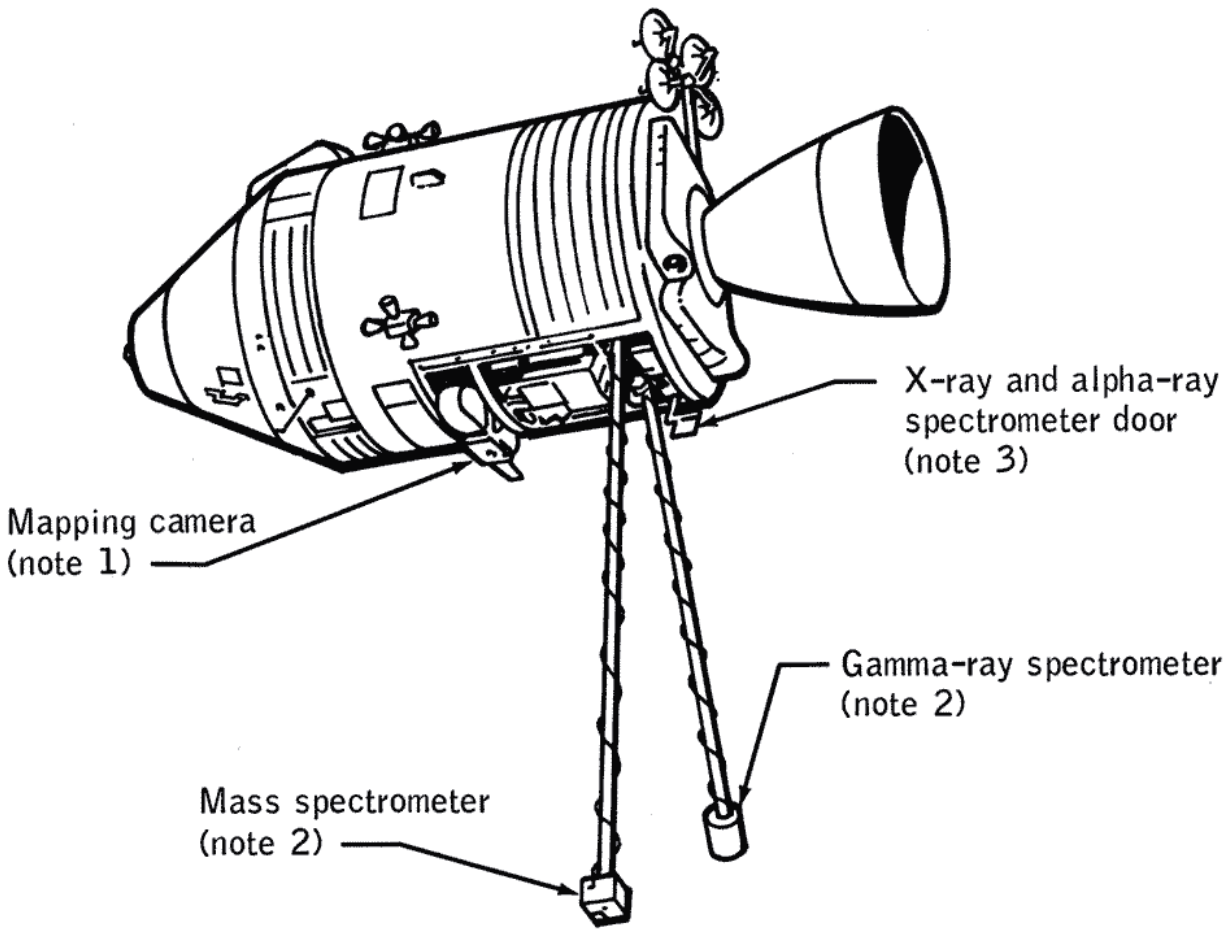


Notes

1. Mapping camera extended and retracted on rails with linear ball bushing, driven by screw with ball nut.
2. Gamma-ray spectrometer and mass spectrometer extended and retracted on spiral-wrapped steel tape booms, driven by dual tape reels.
3. Experiments were protected from optical and thermal control surface degradation during firing of adjacent service module reaction control system firings by mechanically actuated covers.

Figure 4-12.- Apollo 15 command and service module in lunar orbit configuration.

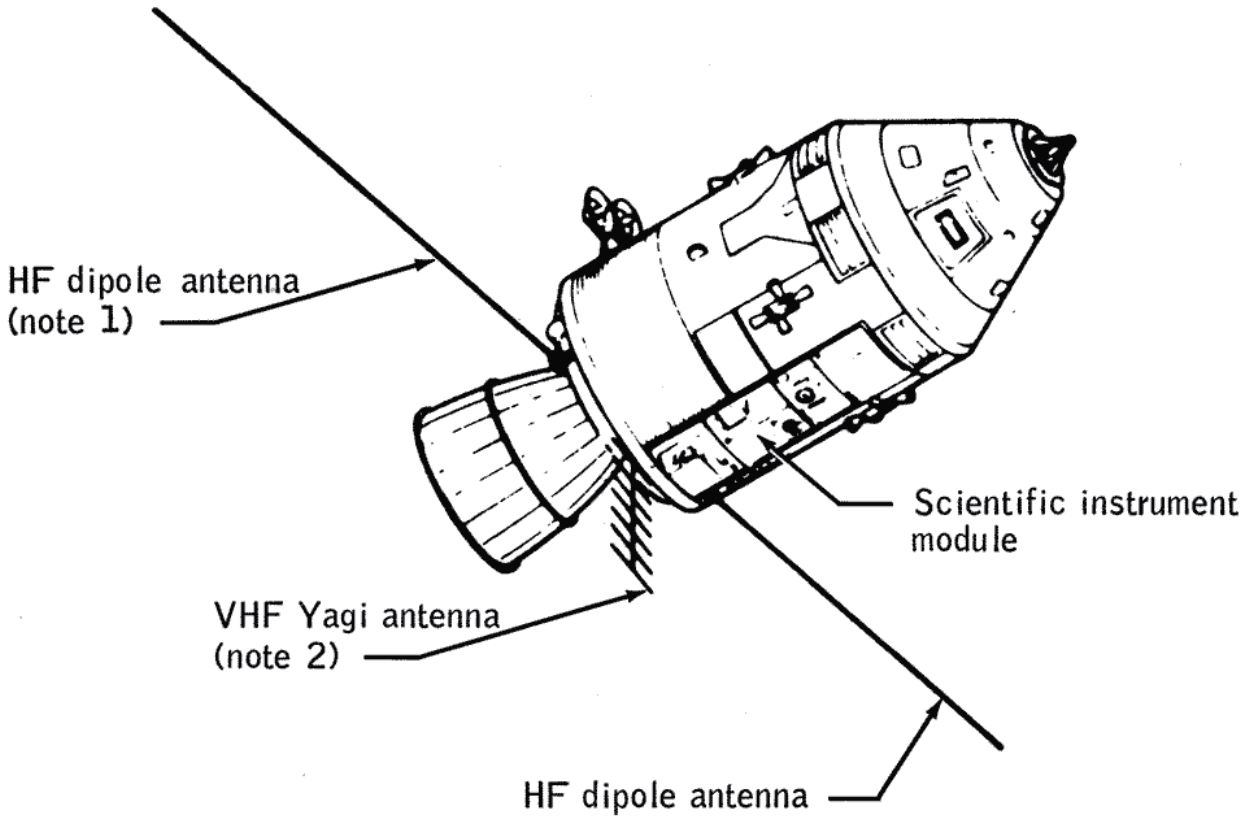


Notes

1. HF dipole antenna extended and retracted as interleaving steel tapes, driven by dual tape reels. Combined length when extended was approximately 80 feet.
2. VHF Yagi multiple element antenna extended once and locked as a rigid, spring-loaded, hinged assembly. Not retractable. Extended length 103.8 inches.

Figure 4-13.- Apollo 17 command and service module with antennas extended for lunar sounder experiment.

Several titanium alloy pressure vessel problems occurred in the early developmental stages. These were (1) overly large grain size (which was eliminated by a vendor change) and (2) premature failure during proof-pressure testing caused by a phenomenon known as creep. Increased wall thickness of the pressure vessel allowed certification of the vessel for flight. Other problems resulted from hydride formation on various welds, dissimilar metals joining, and quality control of electron-beam welding. In all cases, a materials or process change was found to adequately resolve the problem.

Uniform depletion of the tank content was necessary so that, at any time during a mission, emergency quantities of fluid were available in each tank. Equal depletion was maintained by internal heaters. The original design for the heaters was a concentric aluminum sphere that was perforated to reduce weight. The heater element was a high-resistance film (electrofilm) sprayed over the aluminum sphere.

High heat rates from small areas can result in zones of fluid adjacent to the heater with significant temperature and density gradients. Vehicle accelerations can suddenly mix these thermally stratified zones and, under some fluid conditions, significant pressure decays can result. The potential problem of thermal stratification was circumvented by the installation of a fan and heater combination instead of using the coated aluminum spheres. In this design, a fan was installed at each end of a perforated, cylindrical tube, and the heater element was brazed in a barberpole manner around the tube. As a result of the Apollo 13 failure, however, the fan motors were removed from the tanks to reduce potential ignition sources (fig. 4-14). In the final configuration, heat was transferred by natural convective processes.

The method of insulating the tanks was developed through extensive analysis and was optimized by a comprehensive test program. Tests were conducted on removable outer shells that were clamped together; then the entire assembly was placed in a vacuum chamber. This configuration permitted rapid modification of the test article. These tests led to the conclusion that a vapor-cooled shield was required to achieve the specified thermal performance. The vapor-cooled shield provided an intermediate cold boundary layer within the insulation. The oxygen tank had eight sequences of insulation, and the hydrogen tank had 28 sequences. One sequence consisted of six layers: three of aluminum foil (each 0.0005 inch thick), two of paper, and one of fiberglass. All of the tanks were vacuum jacketed. A monocoque outer shell was selected, and a thickness of 0.020 inch was found to withstand the buckling stresses brought about by the 1-atmosphere load.

By far the most serious flight problem was the one that occurred during the Apollo 13 mission when oxygen tank 2 failed at almost 56 hours into the mission and caused the loss of the entire cryogenic oxygen system. An accident investigation board determined that two protective tank heater thermal switches failed closed during an abnormal detanking procedure prior to flight. Subsequent fan motor wire insulation damage caused a fire in one of the oxygen tanks and subsequent loss of the system. The changes made as a result of the investigation, in addition to the elimination of the fan motors, included reducing or eliminating internal materials with relatively low burning points (such as magnesium oxide, silicone dioxide, and Teflon).

The development of the cryogenic storage system resulted in significant technological developments for cyrogenic applications, particularly in fabrication and welding of pressure vessel shells, metallurgy associated with titanium creep and hydride formation, application of vapor-cooled shields in high-performance insulation, and vacuum acquisition and retention. Most of these advances are directly applicable to other required cryogenic developmental programs. Additionally, preflight analytical predictions and subsequent correlations with flight data have contributed much information on heat transfer and stratification of cryogens at low-gravity levels. Reference 4-34 provides more detailed information regarding the development and performance of this system.

### 4.4.6 Electrical Power System

The electrical power system consisted of a fuel cell power generation system, a battery power system, and a power conversion and distribution system. The development and performance of each system is discussed.

4.4.6.1 Fuel cells.- The fuel cells provided all electrical power required by the command and service module from launch to command module separation prior to entry, although batteries

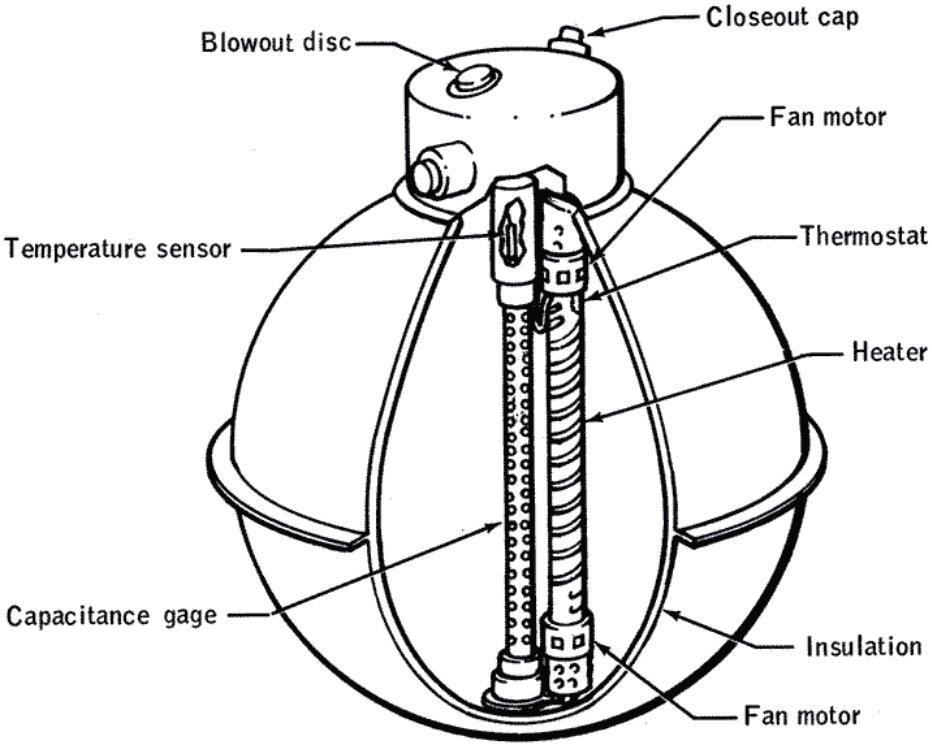


(a) Configuration before Apollo 14.

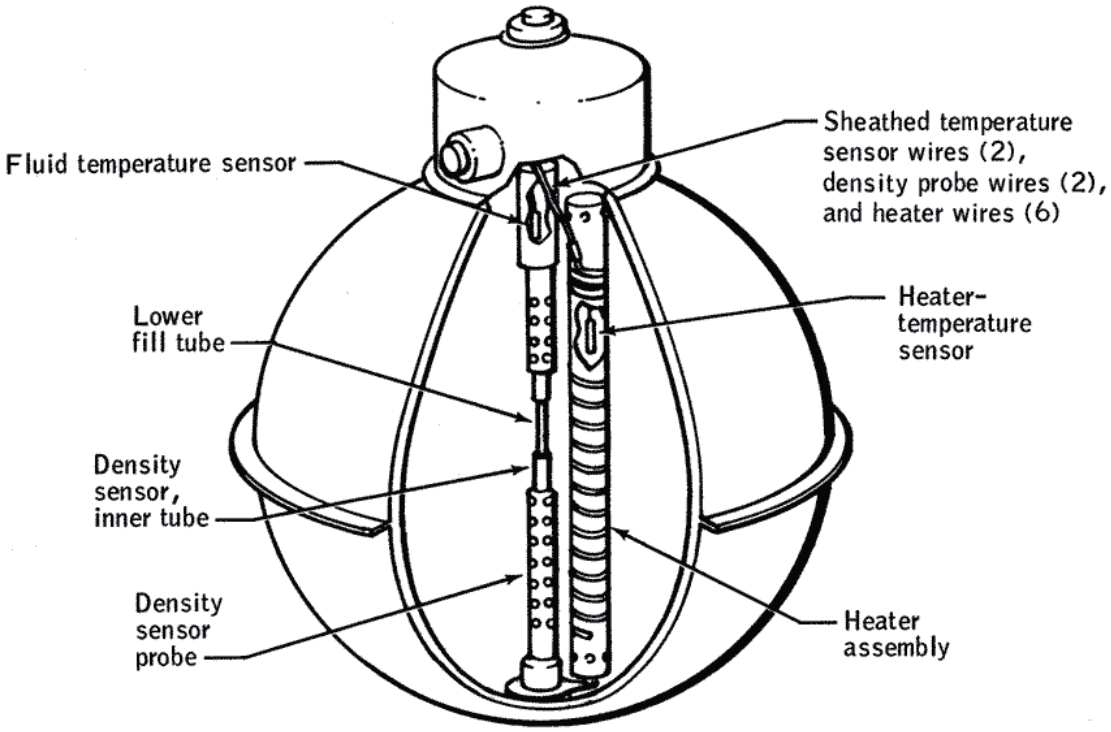


(b) Configuration for Apollo 14 and subsequent spacecraft.

Figure 4-14.- Oxygen tank.

were available for power augmentation such as might be required during service propulsion engine firings.

Before the selection of a power system to meet the requirements of the Apollo program, various nuclear, chemical, and solar energy devices were considered. The fuel cell system was selected because of its favorable developmental status, relatively light weight, and great operational flexibility. Following the selection of fuel cells for the primary power generation system, the mission electrical energy requirements were defined and specified as 575 kilowatt-hours of energy from three fuel cells at a minimum rate of 563 watts per hour and a maximum rate of 1420 watts per hour per fuel cell.

The system contained three fuel cell modules, each having four distinct sections: an energy conversion section (the basic cell stack), a reactant control section, a thermal control and water removal section, and the required instrumentation. Figure 4-15 shows one of the modules. The fuel cells consumed hydrogen and oxygen from the cryogenic storage system and produced electrical energy, water, and heat. The electrical energy was produced at a nominal 28 volts dc and was distributed, conditioned, and used throughout the command and service module. The water was stored in tanks in the command module and used for drinking and cooling. The heat produced by the fuel cells was rejected by means of radiators around the upper part of the service module.

The available fuel cell technology at the beginning of the program was inadequate to fabricate an operable system that would be reliable under the expected mission conditions. The more significant problems encountered in the development of the flight system are discussed.

An early developmental problem was leakage of electrolyte at the periphery of the unit cell (fig. 4-16). The electrolyte is highly concentrated potassium hydroxide, a very corrosive solution that is difficult to contain. The use of Teflon as a seal material and the incorporation of design improvements eliminated the leakage problem.

The two half cells (electrodes) that formed the single-cell assembly (fig. 4-16) were composed of dual-porosity sintered nickel formed from nickel powder that was pressed into sheets. The liquid-electrolyte/gas-reactant interface was maintained within the sintered nickel by means of a controlled 10.5-psi pressure differential between the electrolyte and the reactant compartments. If either the hydrogen or oxygen gas pressure was more than 2.5 psi below or 15 psi above the electrolyte pressure, a breakdown of the liquid/gas interface was possible. In the early design stages, many electrolyte leaks developed that allowed potassium hydroxide to enter the gas-reactant cavities. As a result, individual cells failed to maintain an electrical load. The manufacturing procedure was changed to obtain a more uniform porosity of the nickel electrodes, thus increasing the bubble pressure and decreasing susceptibility to flooding. Also, a coating of lithium-impregnated nickel oxide was added to the electrolyte side to inhibit oxidation. These modest improvements helped, but the fundamental problem of ground test cell flooding caused by gas pressure imbalance remained throughout the program. This ground test operational defect was minimized by improved ground support equipment, better gas distribution systems, improved test procedures, and more careful handling.

The fuel cell showed signs of internal shorting during qualification testing. The cause was the formation of nickel dendrites between the electrodes due to electrochemical reaction. The reaction rate was found to be dependent upon temperature and time. Therefore, operational procedures were changed to minimize fuel cell operation during cell buildup and launch checkout. The problem did not recur after this change.

An accumulator was provided as part of the water/glycol coolant system to maintain a constant coolant pressure without regard to the volumetric changes due to coolant temperature variations. This pressure was controlled by a flexible bladder that imposed a regulated nitrogen blanket pressure on the coolant system. During ground tests using boilerplate spacecraft 14, thermal expansion of the water/glycol extended the accumulator bladder to its dimensional limit, causing the coolant pressure to increase. A larger accumulator was added to production fuel cells and no problems were encountered thereafter.

The electrolyte, 80 percent potassium hydroxide, was a porous solid at ambient temperature. Therefore, small quantities of reactant gases could permeate the electrolyte as it dried and hardened during shutdown of the fuel cell. The early method of shutdown depressurization was to open the reactant-gas purge valves and thereby rapidly reduce cell pressure. When the cells were rapidly depressurized, the expansion of the trapped gases could break the bond between the electrode

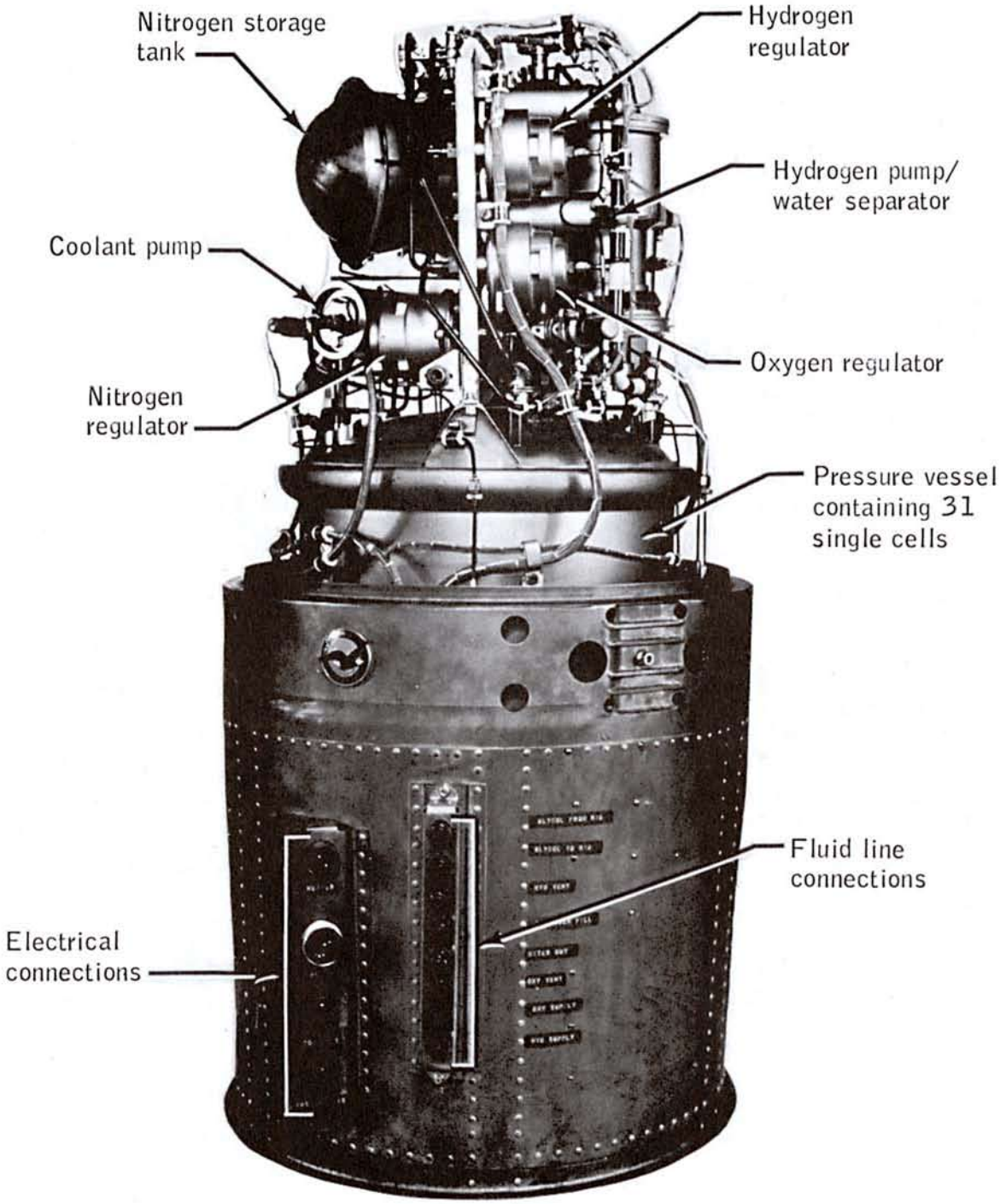


Figure 4-15.- Apollo fuel cell module.

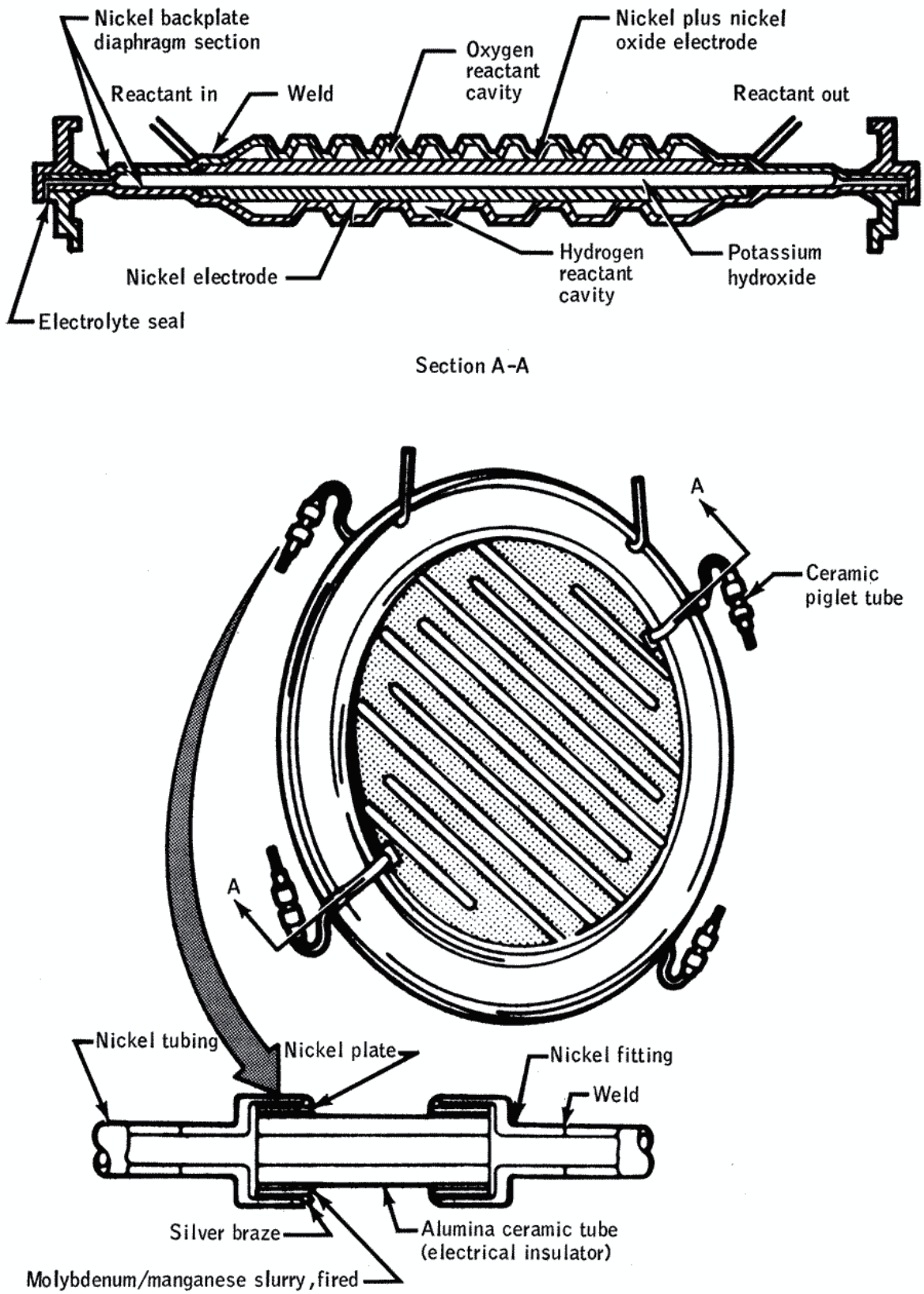


Figure 4-16.- Single-cell assembly.

and the solidified potassium hydroxide. On restart of the cell, the trapped reactant gas formed a bubble between the electrolyte and the electrode. This reduced the active electrode area and caused a decrease in performance. Careful adherence to a controlled, slow repressurization of the cell reactant gases eliminated the bubbles, because the trapped gases could diffuse out slowly from the solidifying electrolyte.

During acceptance tests, several of the water/glycol pumps tended to stick on initial fuel cell start. Examination of failed pumps showed that, during a final flush-and-dryout procedure before storage, a residue was left on the shaft. Therefore, the shaft could not rotate because the pump had a low (4 inch-ounce) starting torque. After the water/glycol pumps were started, the residue would dissolve and the failure did not occur during operation. A new rinse-and-dryout procedure was adopted and the residue problems ended.

Two reactant purge ports, one for hydrogen and one for oxygen, were provided on each fuel cell to allow purging of impurities (nonreactant gases) that accumulated in internal cell reactant cavities. During testing with airframe 008, water vapor condensed and froze at the purge opening under extreme thermal conditions, preventing further hydrogen purging. To correct the condition, two heaters, connected electrically in parallel for redundancy, were added to subsequent flight vehicles. The heaters were activated 20 minutes before a fuel cell hydrogen purge and turned off 10 minutes after the purge was terminated.

Only one fuel cell problem was encountered during the Block I command and service module flights. Cooling system temperature excursions observed during the AS-202 mission were found to be caused by inadequate radiator coolant loop servicing, which permitted gas bubbles to remain in the system and caused the coolant pump to cavitate. Improved servicing and checkout procedures corrected the problem.

Condenser exit temperature problems were experienced on most of the early Block II flights through Apollo 10. The fuel cell condenser served as a means of controlling the humidity of the fuel cell hydrogen loop; the condenser exit temperature determined the position of a secondary coolant loop bypass valve and was, therefore, a prime determinant of the thermal condition of the fuel cell. The combination of coolant, corrosion inhibitors, and aluminum plumbing caused the formation of a gelatinous product over long dormant periods. The formation of this product in the coolant loop on Apollo 7 and 9 affected secondary loop bypass valve performance. Servicing procedures were revised to service the coolant system at the Kennedy Space Center as late as possible prior to launch and to sample the coolant loop fluid. The radiators were hand-vibrated and flushed if any of the coolant samples were questionable. The fuel cells for Apollo 11 and subsequent spacecraft were retrofitted with Block I bypass valves which were shown by tests to be less susceptible to contamination than the improved Block II valves.

Another condenser exit temperature problem was observed on the Apollo 10 mission. The condenser exit temperature oscillated well out of the normal control band during lunar orbit and caused repeated caution and warning system alarms. Investigation showed (1) that the fuel cell thermal control system was marginally stable under certain conditions of high loads and low radiator temperatures such as those experienced during lunar orbit dark-side passes and (2) that thermal oscillations could be induced if the system was adequately "shocked." This was simulated in ground tests by alternately stopping and starting the coolant pump while in the proper fuel cell operating conditions. Analysis determined that the shock, or trigger, for the inflight oscillations was the result of water slugging out of the condenser in large subcooled quantities rather than in the uniformly sized droplets that had always been observed in ground operations. Although nothing could be done to prevent this zero-gravity phenomenon from recurring (which it did, several times), procedures were developed to stop the oscillations when they occurred, and the circumstances necessary to develop oscillations were carefully avoided whenever possible. Temperature oscillations were not observed on flights after Apollo 10.

The ingestion of hydrogen gas into the drinking water caused discomfort to the crewmen until a hydrogen gas separator was developed and added to the drinking water system. This device removed a sufficient amount of hydrogen from the water so that it was no longer a serious problem to the crewmen.

The fuel cell proved to be a reliable and versatile electrical power generation device in the Apollo program. The fuel cell operated satisfactorily during spacecraft launch/boost vibration and in the space environment, and met all electrical demands imposed on it. When problems did occur, the redundancy of the fuel cells prevented catastrophic results, and the extreme operational flexibility of the system usually permitted operation in modes that obviated or minimized the likelihood of recurrent failures. Additional information on the fuel cell power generation system is contained in reference 4-35.

4.4.6.2 Batteries.- As stated previously, batteries were used to augment the fuel cells during periods of high current demand. Battery power was also used (1) to supply low-level loads that had to be isolated from the main buses, (2) to supply electrical power after jettisoning of the service module, and (3) to provide power for pyrotechnic devices.

The battery complement on manned missions through the Apollo 13 mission consisted of five silver-oxide/zinc batteries located in the command module. Three of these (entry-and-postlanding batteries) were rated at 40 ampere-hours each and were rechargeable. The remaining two (pyrotechnic batteries) were each capable of supplying approximately 2 ampere-hours of energy. (The specified capability was 0.75 ampere-hour.) As a result of the Apollo 13 cryogenic oxygen system failure, an auxiliary battery having a capacity of 400 ampere-hours was installed in the service module for the Apollo 14 and subsequent missions. This battery could have provided 12 kilowatt-hours of emergency energy and could have been connected to the command module main buses through the distribution system for fuel cell 2.

The requirements established for the Apollo command and service module batteries were well within the existing state of the art for batteries; hence, no unique problems were identified or experienced during battery development and qualification during short-time unmanned flights.

The only significant battery problems on the operational flights resulted from the use of a relatively new type of nonabsorbent separator (Permion 307) in the command module entry-and-postlanding batteries and from failure to verify the effectiveness of the battery-charging system for those batteries. These two factors jointly resulted in severe undervoltage on the command module main buses at command module/service module separation during the Apollo 7 mission. The final solution of these problems for the flight of Apollo 11 was achieved by reverting to the originally used absorbent cellophane separator material and by raising the output voltage of the command module battery charger. With the possible exception of an auxiliary battery in the unmanned Apollo 6 flight (there was insufficient data to prove a battery failure), no command and service module battery failure occurred in any flight. Reference 4-36 contains more detailed information on battery performance.

4.4.6.3 Power conversion and distribution.- Two systems for power conversion and distribution were designed and flown during the Apollo program. The first was used in the launch escape vehicle test program conducted at the White Sands Missile Range. The design philosophy for this system was based upon returning performance data for evaluation. Thus, the design was quite simple and NASA facilities were used for fabrication. The second was the operational system used on the manned Apollo flights. Since high reliability was required to assure crew safety, this system was more complex and was fabricated by the command and service module contractor.

a. System for early development flights: Off-the-shelf hardware components that had been qualified on previous space programs were used in the launch escape vehicle test program. This assured early delivery and low cost as well as giving a high probability that these assemblies would pass the Apollo environmental qualification tests after having been installed in higher level assemblies. As an example, the relays, connectors, wire, current shunts, and fuses were qualified in the Mercury program. The fuse holders were qualified in the X-15 aircraft program.

All loads were protected by fuses except those that were essential to the primary mission objectives. The philosophy was that, if a load was of secondary importance and could short circuit, a fuse should be in the line to remove the shorted load from the bus, thereby allowing the other loads to operate properly. If the load was of primary importance, however, a short circuit could cause the loss of the primary mission objectives and, thus, it did not matter whether the load was fused or not. Also, since reliability analysis showed that a fuse would be one more series element that could fail, the loads of primary importance were not fused. In addition to the hardware selection and circuit design considerations, redundancy and fail-safe techniques were used, good wiring practives were followed, and good quality control was maintained. No flight failures occurred in this system.

b. Operational system: The operational system used on the manned Apollo flights took longer to design because, with the manned mission requirement, a stricter design philosophy was followed to assure crew safety.

Although a great deal of the required system reliability was achieved through the design itself, performance was enhanced by extensive testing of individaul components, separate assemblies, the total distribution system, and the entire vehicle. In addition to evaluation and design proof tests, a random production sample of each component was subjected to a series of electrical, mechanical, and environmental tests before certifying that part for flight. Finally, various selected parameters of each component or assembly were measured during acceptance testing before installation of the components into higher level assemblies.

The direct-current distribution, designed around two isolated main buses, received power from any combination of three fuel cells and/or three command module batteries. Redundant loads were connected to each bus, nonredundant critical loads were connected to both buses through isolation diodes, and noncritical loads were connected to either bus as required to equalize the loads. This configuration prevailed until the Apollo 13 failure highlighted the need for the additional battery that was installed in the service module for the Apollo 14 through 17 missions.

Based on the experience of the Mercury and Gemini programs, wherein it was demonstrated that many of the inflight tasks did not need to be automated, automatic functions in the electrical power system were kept to a minimum. The only functions that were automated were those which had to be initiated faster than a crewman could react. For instance, the power system was designed to connect the command module batteries to the buses automatically in the event of a pad abort.

The alternating-current distribution system contained circuitry to disconnect a bus from its source automatically if the voltage became too high. This was necessary because electrical equipment, especially semiconductor devices, can be damaged by instantaneous excessive voltage. The alternating-current sensor and associated circuitry therefore monitored each alternating-current bus for voltage and current. If the voltage became too low or the current too great, the sensor signaled the crew, notifying them of the need for action. If the circuit sensed an abnormally high voltage, the circuit automatically removed the affected bus from the inverter and signaled the crew regarding the changeover.

Distribution of alternating current was achieved through a system similar to that of the direct-current system. Three static dc-to-ac three-phase inverters provided alternating-current for the vehicle, each phase furnishing 115-volts at 400 hertz. Although each of the inverters was capable of providing 1250 volt-amperes of power, more power than was required for the entire vehicle, three were installed for increased reliability. During normal operation, two inverters supplied power while the third inverter remained on standby.

Alternating and direct current were used to provide power to the battery charger used to charge the three command module entry-and-postlanding batteries. To provide maximum reserve power for emergencies and for recovery aids after landing, the batteries were recharged as soon as possible after each use.

Fuses, circuit breakers, and sensors were all used so that faulty loads could be removed from the bus and the sources protected from downstream failures. Mission success and crew safety demanded that failures not be allowed to propagate to other areas and that the sources and buses be protected.

The electrical power distribution system performed satisfactorily throughout the flight program. Further information may be obtained from reference 4-37.

### 4.4.7 Propulsion Systems

The command and service module propulsion systems consisted of the service propulsion system, used for major velocity changes, and two separate reaction control systems, one in the command module and one in the service module.

4.4.7.1 Service propulsion system.- Early requirements for the service module included vernier and main propulsion systems for a direct lunar landing profile. The main propulsion system was to consist of several identical solid-propellant motors which would provide thrust for translunar abort and lunar ascent. A separate module was to be designed that would provide for terminal descent. These requirements were changed early in 1962 to specify a single service module engine. Earth-storable liquid hypergolic propellants were to be used by the new system, which could include single or multiple thrust chambers. The service propulsion system was to be capable of providing for abort after jettison of the launch escape system, for launch from the lunar surface, and for midcourse corrections during earth return.

When the lunar orbit rendezvous mode was selected over the direct lunar landing mode in July 1962, the service propulsion system requirements were reduced to provide for midcourse corrections, lunar-orbit insertion, and transearth injection. The final service propulsion system design had a single pressure-fed-liquid rocket engine which used nitrogen tetroxide as the oxidizer and hydrazine (Aerozine-50) as the fuel. The propellants were stored in four tanks located in the service module. The tank pressurant gas was helium, which was supplied from two bottles located in the center bay of the service module. Isolation valves, check valves, and regulators for the helium supply system were mounted on a panel in one of the service module bays. A propellant utilization and gaging system was used to maintain the correct oxidizer-to-fuel ratio for the engine.

In the early stages of system development, materials and processes were investigated. Material-properties research was conducted to determine the emissivities of nozzle and nozzle-coating materials. Tube brazing and weld techniques were improved by means of propellant-metal compatibility studies and brazing-welding metallurgical investigations. Thrust chamber ablative materials were selected after the completion of laboratory tests that limited the materials list before thrust chamber testing. Laboratory studies were conducted on 42 potential thrust chamber material samples; the studies included high-temperature vacuum tests and thermal- and structural-properties investigations. Seal materials for propellant equipment were selected after investigation of elastomer and pseudoelastomer compounds to screen for propellant compatibility, swell, creep, resilience, and other seal properties.

Zero-gravity propellant motion problems were investigated by means of theoretical and experimental research in fluid mechanics. The goals of this research were new modeling and scaling techniques for earth simulation of zero-gravity effects on the propellant and an improvement in the understanding of fundamental phenomena.

The complete propulsion system was subjected to a test program using heavyweight test rigs and a flight-type system at the White Sands Test Facility. These tests were conducted at ambient conditions and explored the full range of potential system use. The engine was qualified primarily through simulated altitude testing at the Arnold Engineering Development Center.

Throughout the engine development and qualification phase, many configuration changes occurred as a result of knowledge gained in the test programs. One of the more significant changes resulted in the incorporation of a baffled injector to reduce the risk of combustion instability.

Inflight testing was the final phase of the service propulsion system development. Qualification of the system under all space-operational conditions was attempted during the ground test program. However, the impracticability of simulating all space conditions in ground tests prevented complete demonstration of system performance. Thus, the service propulsion system was used conservatively in the early flights. As the flight program progressed, the complexity of operating modes and system demands were increased.

Several notable problems were encountered during the flight program. First, the propellant gaging system, while operating as designed, was not matched to the system in a manner that allowed a direct reading of actual propellants without correction throughout the mission. This required interpretation of indicated quantities by system specialists and was a source of crew irritation on several missions. Secondly, incomplete bleeding of gas trapped in the engine and feedlines during propellant loading resulted in unusual start transients on the Apollo 8 mission. Improved engine bleed provisions were incorporated on later spacecraft. In another case, the engines were re-orificed to eliminate unbalance between the propellant flow rates. Prior to the re-orificing, the propellant utilization valve was used to correct the unbalance. These and other problems noted during the operational phase of the program are discussed in more detail in reference 4-38.

The most significant lesson that was learned from the service propulsion system development program was the need to first develop basic technology for propulsion systems before initiating full-scale hardware designs. Besides the anticipated technical problems such as engine performance and combustion instability, schedule delays were experienced during hardware development, and these delays generally were associated with the high reliability requirements of the Apollo program and the lack of experience with the propellants and their effects on materials.

4.4.7.2 Reaction control systems.- Initially, the reaction control system capabilities were to include attitude control, stabilization, propellant settling for the aforementioned vernier propulsion system, and minor velocity corrections. The system was to be pulse modulated and pressure fed, and was to use storable hypergolic propellants. When these requirements were changed to delete the vernier propulsion system, a requirement was added to provide (1) ullage maneuvers (propellant settling) for the service propulsion system and (2) a deorbit capability to back up that of the service propulsion system. The redundant system concept was also expanded such that the command module reaction control system consisted of two independent systems and the service module reaction control system consisted of four independent systems, each having a four-engine cluster (quad).

The basic design of the command and service module reaction control systems was not changed appreciably from the original concepts. The only major change to the service module reaction control system was to increase the propellant storage capacity of the Block II system by adding one additional fuel tank and one additional oxidizer tank to each quad assembly.

In each service module reaction control system assembly, high-pressure (4150 psia) helium was stored in a spherical titanium alloy tank. The helium flowed through two-way solenoid-controlled isolation valves to regulators. After being regulated to the desired working pressure (181 psia), the helium passed through check valves and into the gas side of the propellant tanks. Pressure relief valves were provided between the check valves and the propellant tanks to prevent overpressurization of the tanks. The propellant forced from the propellant tanks by the collapsing bladders flowed through solenoid-controlled isolation valves and in-line filter assemblies into the engine assemblies. Each of the four engines on each quad was a pulse-modulated, radiation-cooled, 100-pound thrust unit. The service module reaction control system also included heater assemblies and controls to maintain safe operating temperatures in the systems, many access ports for checkout and servicing, and an instrumentation system, including a propellant quantity gaging system, to monitor system performance.

The command module reaction control system was similar to the service module system with the following exceptions. It had two rather than four independent assemblies, each capable of providing entry control. The system also had pyrotechnic, normally closed, helium isolation valves rather than solenoid valves. These valves were opened just before entry and no provision was made for isolating the helium supply. To provide sealing of the system before use, burst-disk-type isolation valves were installed in the propellant feedlines between the tanks and the solenoid-type propellant isolation valves. The limited-life engines were ablatively cooled. The command module reaction control system also had provisions for interconnecting the two redundant systems. Additionally, the propellants and the pressurizing gas could be dumped rapidly in case of an abort.

Although none of the components were off-the-shelf items, most of them were state of the art. For these, the development program was rather straightforward and usually consisted of (1) tests of pre-prototype hardware to define the design, (2) a design verification test of prototype hardware to verify design adequacy, and (3) qualification tests to demonstrate the adequacy of production hardware.

In addition to the component tests, a considerable number of system-level tests was conducted. Several of the system-level tests constituted a part of the formal certification. The system-level evaluations included system performance demonstration tests, vibration tolerance demonstration tests, and thermal vacuum tests. A detailed discussion of the system-level test program is contained in reference 4-39.

A certification and qualification test program was conducted for each component in the command and service module reaction control system. These tests included a demonstration of the capability to withstand exposure to temperature, vacuum, vibration, shock, propellants, and acceleration conditions, and demonstrations of operational capability such as functional cycling, proof pressure tests, leakage tests, and pressure-drop tests. Tests were also conducted to demonstrate tolerance to particulate contamination and to determine the quantity of contaminants generated. Additionally, selected components were tested under conditions that were more severe than those expected during flight, including vibration to 1.5 times the normal qualification levels and pressurization to the component burst point. A number of problems encountered during these tests necessitated modifications or imposed operational limitations.

Two hardware failures occurred during flight missions in the service module reaction control system and five in the command module reaction control system. There were also five electrical-type failures, all on the command module reaction control system. Because many of these failures occurred on early missions that were flown at the same time that the qualification and system-level ground tests were being conducted, the failures were not unique to flight experience. Those failures experienced only in flight are discussed in the following paragraphs.

Apollo 7 postflight tests revealed that the command module reaction control system propellant isolation valves would not latch in the closed position. The tests showed that if the valve was closed at the time of system activation, the valve bellows were damaged to the point of causing the failure. The corrective action was to open the isolation valve before the systems were activated.

During Apollo 9 and several subsequent missions, some of the service module reaction control system propellant isolation valves inadvertently closed during separation of the spacecraft from the S-IVB launch vehicle stage. Investigative testing revealed that the pyrotechnic shock was sufficient to cause the valve to close but did not damage the valve. The valves were simply reopened and no further corrective action was required.

Another flight failure involved the interface between the reaction control system and the parachute system. As discussed previously, small holes were found in the canopy of a recovered main parachute on an early flight. These holes were caused by raw oxidizer which was expelled from the command module reaction control system after the fuel was expended during the propellant depletion firing after entry. (The firing was accomplished after the main parachutes were deployed.) On the Apollo 7 mission, the depletion firing was not accomplished and the excess propellants were left on board. For the Apollo 8 mission, the command module reaction control system was loaded with an excess of fuel so that, during the depletion firing, the oxidizer would be expended before the fuel; the firing was satisfactorily accomplished. On the Apollo 15 mission, several riser lines on one of the main parachutes failed. Investigative testing demonstrated that burning fuel from the depletion firing caused the parachute failure. Consequently, the Apollo 16 and Apollo 17 command modules were landed with the excess propellants on board.

The last corrective action brought about a hazardous situation that occurred during postflight deservicing of the Apollo 16 command module. On previous flights, essentially no residual propellants were left on board. However, the deservicing procedures used on these earlier missions were also used for the Apollo 16 command module, which had about 200 pounds of residual propellants on board. During the offloading of the oxidizer, an incorrect ratio of neutralizer to oxidizer resulted in an explosion that destroyed the deservicing cart. After Apollo 16, the deservicing procedures and ground support equipment were changed so that the fuel and oxidizer were put in separate containers and neutralization was accomplished at a remote site.

In retrospect, certain problem areas were common to many of the component development efforts. Recommendations to minimize the impact of the problems on future programs are as follows.

The initial component function design specifications often were more stringent than was necessary because actual requirements were not known. In some cases, the specification requirements were the projected limits of the state of the art at the anticipated time of use. As the requirements were defined more fully, there was hesitancy to relax the specifications, which might have resulted in some unnecessary and, perhaps, unfruitful efforts. An intensive effort should be made to define requirements accurately as early as possible. Also, as a relaxation in requirements become evident, the specification should be relaxed if cost or schedule savings can be realized.

A lack of compatibility of the system and its components with the propellants was a recognized problem early in the Apollo program. The major deterrent to efficient resolution of the problem was the unavailability of elastomeric materials that were compatible with propellants under long-duration exposure. A problem that was not recognized until considerably later in the program involved the incompatibility of the system and components with the flush fluids (or combinations of flush fluids) and propellants. At such time that compatibility of a system and its components with fluids is established, all fluids and mixtures of fluids that might be introduced into the system should also be established. Particular attention should be given to determining the specific fluids that might be used during manufacturing and checkout of the system and its components when the materials are selected. Provisions for adequate drying of systems should be made and verified if fluid mixing cannot be tolerated.

Cleanliness control was a problem because of the many small orifices and the close tolerances of moving parts. Assembling a clean system was difficult, and the need for component removal and replacement further increased the probelm. To minimize the problem, filters were added to protect components that had an unusually high failure rate because of contamination. On future programs, all components should be designed to be as insensitive to contamination as possible. Additionally, such components should be protected by integral filters. A further recommendation is that, if fluids are reverse-flowed through any component during a flushing or filling operation, both the inlet and outlet ports on the component should be protected against contamination. If large quantities of contaminants are expected, filters should also be provided at the fluid source.

A considerable number of unnecessary and costly situations occurred during the development and qualification tests, because the production of components was well underway before the test programs were completed, particularly during the system-level tests. Corrective action for problems that existed during these programs almost always involved the retrofit of production units and the modification of completed systems. Some problems were tolerated because of the extensive vehicle rework that would be required for corrective measures. These shortcomings were compensated for by either tolerating higher rejection rates or modifying operating procedures. Only limited changes were made to the systems as a result of these late tests. Consequently, the test results did little for the development of more reliable systems but, rather, were useful in instilling confidence in equipment or defining operating constraints. A further recommendation, therefore, is that extensive efforts be made to integrate the test program schedules with the master production schedules. Specifically, the overall schedule should be adjusted to provide time to implement the production hardware changes dictated by the test program.

### 4.4.8 Guidance, Navigation, and Control System

The functions of the guidance, navigation, and control system may be divided as follows:

a. Navigation is the process of determining spacecraft position and velocity at a given time in a basic reference coordinate system. The position and velocity data for a given time are referred to as a state vector.

b. Guidance and control are the functions that furnish commands to the engines to change or correct vehicle trajectory and to control vehicle attitude. The engines are controlled automatically in some modes and by the crew in other modes.

The two basic system configurations were referred to as Block I and Block II. The Block I system was designed when the command and service modules were to be landed on the moon. To achieve the system reliability required by this plan, spare units were to be carried on board, and inflight maintenance was to be performed. However, inherent problems existed in this concept that were never really solved, such as moisture getting into electrical connectors during changeout. The adoption of the lunar orbit rendezvous plan provided a logical time to change to the Block II configuration which, because of redundant paths, negated the inflight maintenance requirement and thereby avoided the connector problem. The Block II system was smaller, lighter, and more reliable than the Block I design. Another advantage was that the primary guidance systems for the command module and the lunar module could be nearly alike. The Block I system was flown on unmanned missions only. Therefore, this discussion pertains primarily to the Block II system.

The Block II configuration has a primary and secondary guidance and control system as illustrated in figure 4-17. Although navigation could be performed on board with the primary system, the primary method of navigation was to use data transmitted from the Mission Control Center, and the onboard system served as a backup. The redundancy of the Block II system assured that no single failure would cause total loss of any function.

The primary guidance, navigation, and control system consisted of inertial, optical, and computer systems. The inertial system provided a three-gimbal gyroscopically stabilized platform upon which three accelerometers were mounted, one for each orthogonal axis. Any rotational motion of the spacecraft about the platform was detected by the gyros and measured by resolvers built into the gimbals. Attitude information could thus be continuously sent to the computer. The three integrating accelerometers detected translational acceleration of the spacecraft and provided continuous velocity information to the computer. The inertial system also contained the electronics and power supplies required by the guidance and control system.

The optical system consisted of a sextant, a telescope, and associated electronics. Optical sightings were made on celestial bodies and on earth or lunar landmarks to accurately determine inertial position. When an optical sighting was made, a set of data consisting of time, spacecraft attitude, and optics pointing angles was recorded by the computer. By taking successive sightings, navigation data were obtained to solve the navigation equations.

The computer system received input data from the inertial and optical systems and manual commands from the crew through a hand controller. Operating on these inputs, the system solved navigation equations, generated on-off commands to the 16 attitude thrusters and the main engine, generated steering commands to the engine gimbal actuators, and generated appropriate control and display data. The computer contained a digital autopilot to control the vehicle during all flight phases. Three types of attitude control were available: automatic maneuvering to any desired attitude, maintenance of a desired attitude within selectable limits, and manual control by the crew through the use of rotation and translation hand controllers. During thrusting maneuvers, the autopilot automatically generated commands to the engine gimbal actuators to keep the thrust vector aligned with the center of gravity of the spacecraft. Engine ignition and cutoff commands were issued to achieve the desired velocity changes for that maneuver. During earth entry, the system automatically performed entry navigation and guided the spacecraft to a safe landing by controlling vehicle attitude to achieve the desired aerodynamic lift vector.

The secondary system consisted of attitude control, attitude reference, and thrust vector control systems, and the required displays and controls. The attitude control system received manual commands from two rotation and two translation hand controllers, and data from two body-mounted rate and attitude gyro packages. Operating on these inputs, this system generated on-off commands to the 16 attitude thrusters to maintain the desired attitude and perform the desired maneuvers. The attitude reference system provided display information and maintained an inertial attitude reference. It could be aligned to the primary guidance system inertial platform or to its own control panel thumbwheel settings. Total attitude, attitude errors, and spacecraft attitude rate were displayed on either one of two flight director attitude indicators. The thrust vector control assembly provided two backup modes of controlling the engine gimbal actuators during thrusting maneuvers if the primary system failed. An automatic mode and a manual mode were provided. Command inputs were routed to one of two servo systems which positioned the redundant gimbal actuators. Had a failure occurred in the primary system autopilot, servo system, or actuator, the crew could have switched to the secondary guidance system, servo system, and actuator.

The design and development of the primary guidance, navigation, and control system evolved from error analyses performed on early missile trajectories. The Polaris inertial guidance system concept was thought to be adequate to accomplish the Apollo program. Error analyses determined that moderate errors in the inertial instruments (gyros and accelerometers) could be tolerated because of the inflight realignment capability of the inertial system. The Polaris system was therefore modified and repackaged as necessary. The modifications provided (1) inflight alignment capability, (2) a general purpose computer, (3) mode selection by the crewmen, and (4) inflight maintenance capability (later deleted). Studies were made of strapdown guidance systems and of three-gimbal versus four-gimbal systems before the final configuration was determined.

The computer was developed through three configurations: the first was primarily for research and development, the second for unmanned flight, and the third for manned flight. The software was changed as required to meet specific requirements. The flexibility of the software proved to be a great asset late in the program.

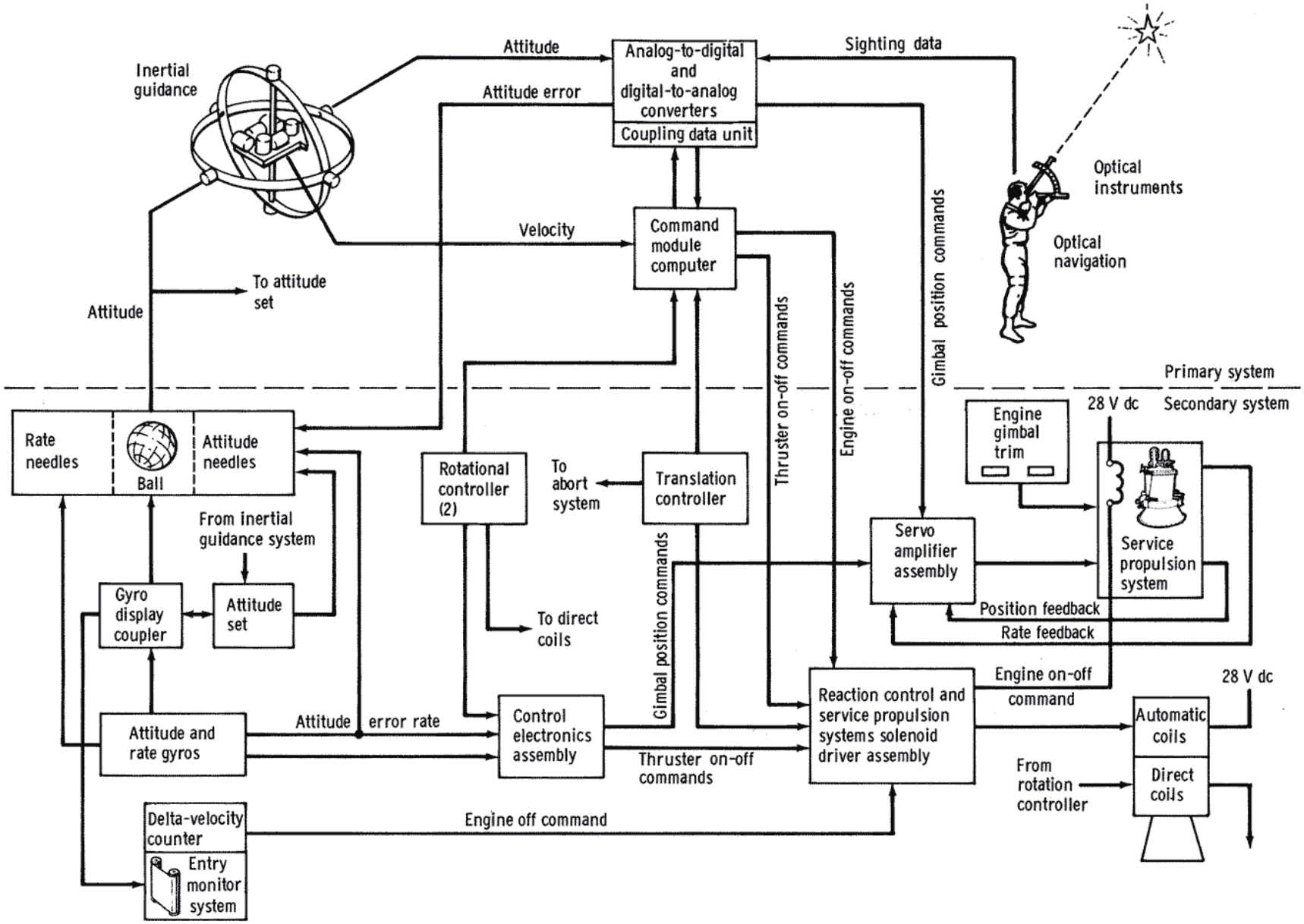


Figure 4-17. - Block II Command and service module guidance, navigation, and control system.

The optical system, at one time, included a map and data viewer and a star-tracker/horizon-photometer assembly. The map and data viewer was intended to display information such as flight plan data, checklists, and maps on rolls of film that could be projected. The viewer was deleted because of cost and schedule implications. The star-tracker/horizon-photometer assembly was intended to track celestial bodies automatically and to aid in tracking lunar and earth landmarks. This assembly was deleted because of cost and schedule impacts, and a rate-aided tracking routine that used computer software and existing optics equipment was substituted.

The test program consisted of four basic phases: development, qualification, acceptance, and installation and checkout. Functional, environmental, and evaluation tests were performed on material, parts, and components during the development test phase. Environmental and performance evaluation tests were performed on production parts, assemblies, subsystems, and systems during the qualification test phase. In general, systems were tested to nominal mission levels, whereas subsystems and below were tested to the stress level for critical environments. Acceptance tests and installation tests to specified limits were conducted to verify acceptable systems performance.

The performance of the Block I and Block II primary and secondary systems was excellent. The anomalies that did occur were of a minor nature and most were circumvented by workaround procedures.

The most significant anomaly that occurred in the primary system was in the inertial system. A voltage transient occurred when a set of relay contacts was transferring a voltage. The transient was electromagnetically coupled to other wiring within the electronics package and resulted in an erroneous indication to the computer that the inertial attitude reference had been lost. The crew reestablished the inertial reference by taking star sightings.

The most significant anomaly that occurred in the secondary system was in the redundant engine gimbal actuator assembly. An open gimbal rate feedback circuit caused unexpected oscillation of the engine gimbal. The oscillation was detected in the redundant servo system while the pilot was performing preignition checks which verify the primary and secondary servo systems.

A good indication of system performance of the inertial and optical systems was available from realignment data. Realignment of the inertial platform was performed periodically during each flight to correct for the very small drift rate of the gyros. The realignment was accomplished by sighting on two known stars using the sextant. The computer compared the measured angle between the stars to the known value and displayed a star angle difference to the crew. The star angle difference was an indication of sighting error (instrument error plus operator error). A 1-sigma value sighting error had been computed for each lunar mission. The largest value was 0.016 degree, and the 1-sigma value for eight lunar missions (Apollo 13 excluded*) was 0.011 degree. This compared well with the error analysis value of 0.012 degree for the two-star alignment procedure.

From the sighting data, the computer calculated the small angular position errors of the platform caused by the small gyro drift rates. For eight lunar missions (Apollo 13 excluded*), a 1-sigma drift rate of the command module system was 0.00765 degree per hour. This value compared well with the specification value of 0.030 degree per hour. Accelerometer bias errors (erroneous velocity output when no input acceleration is applied) were equally small. The average bias error for the Block II command module system was 0.00239 foot per second per second.

The performance of the digital autopilot during all thrusting maneuvers of the Apollo program was excellent. The digital autopilot guided the vehicle during thrust maneuvers to achieve a targeted velocity-to-be-gained. The residual velocity-to-be-gained after engine cutoff was an indication of overall system performance. Residuals were caused by accelerometer errors, gyro errors, computational errors, or engine thrust errors. The worst-case velocity residual of the Block II system was 4.4 feet per second. This was attributed to helium ingestion in the engine propellant, which caused a momentary low-thrust condition. Typically, the velocity residuals were on the order of 0.3 foot per second or less.

*Because of operational constraints, normal realignment procedures could not be followed. Consequently, the inaccuracies were larger than would normally be expected and the data were excluded from the calculation of the 1-sigma values.

The performance of the computer was flawless. Perhaps the most significant accomplishment during Apollo pertaining to guidance, navigation, and control was the demonstration of the versatility and adaptability of the computer software. For instance, the crews gained additional confidence in the digital autopilot with each mission. During the last mission, a special software procedure was used in lunar orbit to maintain precise spacecraft pointing attitudes, despite having normally used attitude thrusters turned off. The only consistent method of initiating the passive thermal control mode was to use a software routine, which was modified slightly to accomplish special results. Workaround procedures, called erasable memory programs, were used time and again to accomplish special jobs and lighten crew tasks. Hardware modification to accomplish these changes would not have been feasible.

As stated earlier, the Mission Control Center provided the primary navigation mode. However, the onboard computer and the sextant and telescope did provide onboard navigation capability. Cislunar navigation (to and from the moon) was demonstrated, particularly during the Apollo 8 and 10 missions. Star-horizon optical sightings were made using the earth and moon horizons. Postflight analysis of these data verified the crew's capability to navigate to the moon, compute the lunar-orbit-insertion maneuver, and place the vehicle in a safe lunar orbit. The same navigation technique was used to demonstrate the crew's capability to return to earth and to accomplish a safe earth landing.

In lunar orbit, the intended navigation technique was to use the telescope to track known or unknown landmarks. In practice, the sextant, which was a more accurate instrument, was normally used because a computer routine called rate-aided optics was available. This routine made the sextant tracking task much easier. Postflight analysis of data from the landmark tracking navigation technique demonstrated the capability to successfully compute a transearth injection maneuver.

For detailed discussions of the development and performance of guidance, navigation and control systems, see references 4-40 through 4-49.

### 4.4.9 Environmental Control System

The three major functions of the environmental control system were atmospheric control, thermal control, and water management. Six systems operating in conjunction with each other provided these functions.

a. The oxygen system controlled the oxygen flow within the command module, stored a reserve supply of oxygen for use during entry and emergencies, regulated the pressure applied to components of the oxygen system and pressure suit circuit, controlled cabin pressure, controlled pressure in the water tanks and water/glycol reservoir, and provided for purging of the pressure suit circuit.

b. The pressure suit circuit system provided the crew with a continuously conditioned atmosphere. With this system, suit gas circulation, pressure, and temperature were automatically controlled, and debris, excess moisture, odors, and carbon dioxide were removed from both the suit and cabin gases.

c. The water system supplied water for drinking, food reconstitution, and evaporative cooling. Water produced by the fuel cells was pumped into a potable water storage tank. Waste water (primarily perspiration condensed by the suit heat exchanger) was stored in a waste water tank and distributed through the control valves of the water/glycol evaporators. Waste water could be augmented by excess potable water for evaporative cooling. If the water production rate exceeded the usage rate, water was dumped overboard.

d. The water/glycol system provided cooling for the pressure suit circuit, the potable water chiller, and the spacecraft equipment mounted on coldplates. The system also heated and cooled the cabin atmosphere. Temperature control was obtained by the circulation of a mixture of water and ethylene glycol through primary and secondary coolant loops. The temperature of the heat-transport fluid was controlled either by radiators or by glycol evaporators.

e. The waste management dump system provided for dumping urine and excess water overboard and venting the waste storage compartment.

f. The postlanding ventilation system provided a means of circulating ambient air through the command module cabin after landing.

To provide the high degree of reliability required for lunar missions, the system was designed with redundant components, backup systems, and alternate modes of operation. For example, parallel system regulators and relief valves were contained in a single housing and had isolation selector valves. Suit compressors, condensate pumps, and cabin fans had separate backup units. The primary coolant system contained redundant pumps, and a secondary coolant system with radiators, evaporator, and cabin and suit heat exchangers was provided. However, some electronic components were not serviced by the secondary loop. Also, the secondary radiators could not reject sufficient heat for a normal mission and were therefore considered a contingency system.

Major changes to the environmental control system during the development program included the redesign of the coldplates, control of the glycol evaporator, and the composition of the cabin gas during preflight operations. More detailed information is given in references 4-50, 4-51, and 4-52.

The most significant change to the Block II environmental control system was the addition of hardware for extravehicular activity from the command module. A 10-pound-per-hour oxygen purge system was added to supply suit pressure, breathable atmosphere, and thermal control to the extravehicular crewman in the event of an emergency. For normal operation, the spacecraft suit circuit system regulated the upstream pressure through a 25-foot umbilical hose to an orifice assembly attached to the extravehicular crewman's pressure suit. Flow was regulated by a suit outlet relief valve which controlled suit pressure at 3.75 psia. The other two crewmen were supported by the spacecraft pressure suit circuit while the cabin was depressurized.

With the exception of the Apollo 13 oxygen source failure, the oxygen system operated satisfactorily throughout the entire flight program. Cabin pressure relief and regulation were maintained at nominal values of 6 and 5 psia, respectively, and all scheduled cabin repressurizations were accomplished without incident. No emergency pressure regulation was required. Inflight cabin leakage varied from about 0.10 pound per hour to 0.02 pound per hour with improvement noted in the later vehicles.

The pressure suit circuit system also generally performed acceptably and met mission requirements. As confidence was gained in the dependability of the spacecraft cabin environment, fully suited operation was eventually limited to the launch and lunar module jettison events. Depressurized cabin operations were handled routinely, and no emergency suit circuit conditions were encountered. Carbon dioxide removal, obtained by alternately replacing the lithium hydroxide elements on a nominal 72 man-hour rotation, was satisfactory. Carbon dioxide partial pressure seldom rose above an indicated 3 torr. Some excessive element swelling due to moisture absorption was noted during solo crewman operation on one lunar flight. Procedures were subsequently incorporated to prevent recurrence of the problem.

Water servicing of the sintered, porous metal plate in the suit heat exchanger proved to be a major system problem. Gas breakthrough and/or degraded flow rate led to extensive ground testing to better understand the physical phenomena involved and to develop an adequate wetting technique. Humidity control and water removal were satisfactory under the flight-imposed coolant loop conditions, and no evidence of gas breakthrough or flow degradation was observed during a mission.

The water system proved to be a source of both positive and negative crew reaction. On the plus side, the hot water provided for food reconstitution was greatly appreciated and was noted as a considerable improvement over the cold food available on earlier spacecraft. On the minus side, gas in the potable water caused problems in filling the food and water bags and in the digestive processes of individual crewmen. The gas consisted of hydrogen from the hydrogen-saturated fuel cell water and oxygen (used to pressurize the water tanks) permeating through the tank bladders. A silver-palladium tube separator was installed to remove hydrogen. To remove the oxygen, a gas separator cartridge assembly that used hydrophobic and hyrophyllic membranes was added for attachment to the water supply ports. This membrane assembly met with only limited success.

Additional crew problems occurred during the daily water sterilization procedures when separate chlorine and buffer solutions were injected into a port in the water system. Leakage at the port was noted during the Apollo 15 mission and breakage of the bags containing the solutions increased during the later missions. Revised assembly methods eliminated the port leakage.

The water/glycol coolant system provided adequate thermal control in spite of several hardware failures. Built-in manual operating modes were successfully used to replace the normal automatic control. Early glycol evaporators showed tendencies to dry out under low heat loads and were reserviced by the crew. Subsequent modifications, which included the previously mentioned relocation of the wetness sensors and trimming of the surrounding sponges, provided satisfactory units. After the radiator system demonstrated acceptable heat rejection, evaporator operation was limited to launch and entry periods only. The radiator and flow-control system provided typical heat rejection in the range of 4000 to 5000 Btu/hr.

Noise from the cabin fans was considered objectionable by the crews, and use of the fans was discontinued on the later flights except to remove lunar dust from the cabin environment.

During the Apollo 16 mission, the automatic controller for the command module water/glycol temperature control failed. Manual positioning of the mixing valve was successfully accomplished by the crew.

The addition of lunar orbital science experiments to the later spacecraft required holding attitudes during experiment operation in lunar orbit which resulted in undesirable radiation environments for the space radiators. Also, operation of the glycol evaporators was undesirable because of possible contamination of the experiment lenses and fields of view, and because of the propulsive reaction of the vehicle. Therefore, during each lunar orbit, spacecraft temperatures cyclically rose to levels from 70° to 85° F rather than being controlled to 50° F, maximum, as intended by design.

On early flights, checks of redundant components were performed each night during the mission. On later flights, the secondary coolant loop and oxygen regulator checks were performed in earth orbit and a secondary coolant loop check was performed just before lunar orbit insertion. Nightly checks were eliminated. No redundant component failure was detected by an inflight check. The only redundant component that may have failed during the Apollo missions was a main oxygen regulator isolation valve which failed closed due to shearing of the actuation handle pivot pin. The failure, however, was believed to have actually occurred after the flight.

An area of deviation from the intended procedure was the use of the glycol evaporator only in earth orbit until the radiators cooled down from the launch heating, and during chilldown for entry. This resulted in higher cabin temperatures during certain fixed attitudes and excessive temperature cycling that ranged from 45° to 85° F during lunar orbit. As a result, condensation occurred on cold surfaces after the higher temperatures of the cycles because the dew point temperature is directly related to the coolant temperature.

Other minor deviations from designed operating modes were (1) use of the carbon dioxide absorber elements for more than 72 man-hours and (2) use of the coolant temperature control valve in manual mode, at a higher temperature than the normal automatic 45° F, to increase cabin temperature and crew comfort. This action was taken because of attitude holds in transearth coast which prevented exposure of the radiators and side structures to the sun and resulted in lower overall temperatures.

When ground thermal vacuum tests indicated that intermittent, automatic overboard relief of excess water might result in dump nozzle freeze-up, a manual method of dumping was developed and used successfully in flight. On later missions, half of the redundant relief valve was removed, and the manual method was simplified by dumping directly through the normal water dump nozzle.

During several of the later missions, urine was stored for medical experiments and dumped overboard only once a day. Crystals which formed in the stored fluid caused plugging of the regular in-line system filter. A special high-capacity, open-cell polyurethane core filter was developed and used successfully for dumping stored urine on subsequent flights.

### 4.4.10 Displays and Controls

The displays and controls system served as the interconnecting link between the crew and the spacecraft. The interior and exterior lighting devices and the malfunction detection devices (known as the caution and warning system) were also a part of the system. The system contained toggle switches, event indicators, electrical meters, panel assemblies (some of which had electroluminescent lighting overlays), rotary switches, pushbutton switches, digital timers (mission timers and event timers), and several other types of control and indicating devices. The types and numbers of devices varied from mission to mission because of different mission requirements.

Many problems became evident during the system developmental phase and much testing and evaluation was required to produce the flight-qualified components for final vehicle installation. With only a few exceptions, identical components were used in the Block I and Block II vehicles.

One of the problems encountered during the development phase was the unsuccessful use of a hermetically sealed snap-action switch unit in conjunction with an unsealed mechanical toggle actuator. The toggle switch was pressure-sensitive and functioned erratically. The toggle switch finally used on Block II vehicles was a completely hermetically sealed unit. A number of discrepancies was encountered during the development of the hermetically sealed switch. For example, extra pieces and parts were found inside the switch, poor welds were observed, and inverted contact buttons on internal terminal posts were found. In spite of the poor preflight record, only one switch of this type failed in flight.

Other items with which problems were encountered during the development and test phases were electrical indicating meters, event indicators, interior floodlights, mission timers, and potentiometers. The electrical indicating meters and the event indicators contained internal contaminants which caused the movements to bind excessively. The interior floodlights had several development problems, some of which were not solved until after the third manned flight. The use of starting diodes that were of better quality and operated at higher voltages corrected the condition that caused the earlier lamp failures. Another corrective action was a change in the lamp-use procedure. Restricted use of the secondary lamps in the dim mode vastly extended the life of those lamps. The Block II mission timer had a solder joint breakage problem because of the difference in expansion rates between internal components and the potting compound. A redesign of the timer reduced the solder joint problem. In addition, the glass faces of some timers cracked. This condition was corrected by a design change to the case seal which had been stressing the glass. The mission timer problems started with Apollo 7 and continued sporadically until the redesigned unit was introduced on the Apollo 14 mission. The potentiometer problem was isolated to a shaft that was being deformed under load and breaking or overriding an internal stop, as well as giving erratic resistance readings. The corrective action was to install a bearing support and an external stop for the shaft and to require a calibration curve with each potentiometer delivered by the vendor.

Because of the thorough development and test program, the flight displays and control system problems were minimal. Some examples of the problems encountered during flight and corrective actions taken are as follows. On the Apollo 15 mission, a shorted filter capacitor tripped a circuit breaker which made some of the lower equipment bay lights and the guidance and navigation display keyboard unusable. Installation of a fuse in the offending circuit prevented recurrence of this problem. There were several instances of poor performance of the event timer during flight. Erratic timing and obscuring of the timer numerals by paint particles resulted from mechanical wear and friction.

Very few changes were made in the displays and controls system during the flight program except to accommodate changes made in other systems. These were usually the addition of items such as switches, circuit breakers, or meters. However, following the oxygen tank failure on the Apollo 13 mission, several changes were made. First, the oxygen tank fan and thermostat controls were removed and two switches were added to connect the auxiliary battery power supply to the distribution system and activate an isolation valve between oxygen tanks 2 and 3. Secondly, the reactant valves in the hydrogen and oxygen lines of all tanks were coupled to the caution and warning system as well as to the event indicators. Finally, the indicator circuitry was changed to indicate when either valve was closed rather than to indicate when both were closed. Additional information on the development and performance of the controls and displays is given in reference 4-53.

### 4.4.11 Communications System

The communications system included the equipment required for voice communications, data operations, tracking and ranging, and onboard television transmission. The system included both VHF and S-band equipment to accommodate the various radio frequencies used in air-to-ground transmissions.

Voice communications included spacecraft intercommunications between crewmen, hardline two-way voice communications with the Launch Control Center through the service module umbilical during the prelaunch period, inflight two-way voice communications with the Manned Space Flight Network (later designated the Space Flight Tracking and Data Network) by VHF/AM and S-band systems, and postlanding voice communications with recovery ships and aircraft.

Data operations included time-correlated voice tape recording of flight crew comments and observations; S-band transmission of real-time or stored telemetry data; and S-band reception of updata (guidance and navigation data, timing data, and real-time commands) from the Space Flight Tracking and Data Network.

As with other systems, the communications system had a major design change point that divided the development program into Blocks I and II. Although certain functional design changes were made for the Block II communications system, the basic change was from a mechanical standpoint. Inflight-replaceable modular-type equipment was replaced with sealed units that had built-in and switchable redundancy where required to meet program objectives. The Block I and Block II communications systems differed in three major aspects.

a. Equipment that was not considered necessary to the lunar landing mission was deleted from the Block II spacecraft.

b. Deficiencies that were noted in the Block I design were corrected in the Block II design.

c. New equipment was added to the Block II system because of the requirement for combined lunar module/command and service module operations.

The deleted equipment consisted of a VHF/FM transmitter and a C-band transponder. Functions of this equipment (data transmission and ranging) were absorbed by S-band equipment. In addition, a high-frequency transceiver and antenna were also removed from the program.

Electrical wiring problems were experienced during the Mercury 9 flight wherein contaminants (water, urine, sweat, etc.) migrated to exposed electrical terminals in the zero-g environment. These problems led to the decision to seal all Apollo electrical wiring and connectors. However, the Block I Apollo hardware was already designed and was being built in accordance with the inflight maintenance concept. This meant that many module-to-black-box connectors and many self-mating black-box-to-spacecraft connectors were required. The attempt to make connectors and modules humidity proof was lengthy, sometimes futile, and practically eliminated any possibility of inflight maintenance. The Block II design change involved repacking the crew compartment equipment into completely sealed units and incorporating built-in and switchable redundancy, as well as backup modes, to achieve the desired reliability and to satisfy the lunar rendezvous mission requirements.

The development of the individual equipment parameters was based on the total communications system requirements. The interface parameters defined in the equipment specifications were validated and verified in laboratory system tests conducted by the major subcontractor as part of the ground test program. Further laboratory tests were performed at the Manned Spacecraft Center to verify overall system compatibility with the Space Flight Tracking and Data Network and the lunar module. However, development and qualification were performed on the basis of individual equipment tests.

Flight tests were performed to ensure that the system would meet the requirements of space operations. Unmanned flights qualified the portion of the system that was required for manned earth-orbital flights. The manned earth-orbital flights, together with supporting laboratory evaluation, qualified the system for the lunar mission operations.

The major problem area in the design, development, and production of the communications system hardware was the S-band high gain antenna. The high gain antenna was the pacing item of communications equipment and underwent extensive redesign to correct for major deficiencies and failures experienced during its development and qualification. As a result, the antenna could not be flown on the Apollo 7 mission as originally planned, and it was necessary to waive the qualification requirement and install the antenna assembly at the launch site to permit its use on the Apollo 8 mission. However, operation during the Apollo 8 mission was considered satisfactory. Data obtained during this mission were valuable in developing procedures and as a reference for evaluating high gain antenna performance during subsequent missions.

The equipment malfunctions that were experienced throughout the program are mentioned here, and additional details may be obtained from the mission reports referenced.

Apollo 9: On one occasion, the updata link would not accept commands until the decoder logic was reset by cycling the spacecraft uptelemetry switch from the NORMAL to OFF to NORMAL positions (ref. 4-15).

Apollo 12: Problems experienced during the Apollo 12 mission were poor VHF voice quality during lunar module ascent and rendezvous and an occasional decrease in S-band signal strength when operating through the high gain antenna. These problems are discussed in reference 4-18.

Apollo 13: Difficulty was experienced in obtaining high gain antenna acquisition and subsequent tracking (ref. 4-19).

Apollo 14: Communications system problems were (1) poor VHF performance for voice and ranging during lunar module ascent and rendezvous and (2) the high gain antenna failure to acquire and track properly at various times during the mission (ref. 4-20).

Apollo 16: On two occasions, the updata link did not accept commands until the decoder logic was reset. This condition was the same as that experienced on Apollo 9 (refs. 4-15 and 4-22). A second problem was that, on one occasion, the high gain antenna failed to operate properly in the reacquisition/narrow-beamwidth mode until the logic had been reset by momentary selection of the manual mode by the crew (ref. 4-22).

Information obtained during the missions was fed back into the operational procedures and the ground test program. The high gain antenna was the major area in which ground tests were changed. A special system-level high gain antenna thermal/functional acceptance screening test, introduced prior to the Apollo 15 mission, was instrumental in identifying an antenna gimbal radio-frequency rotary joint design deficiency that was not detected during development or acceptance testing.

As the result of flight experience, changes were incorporated in the areas of crew-adjustable controls for VHF squelch and for microphone placement. Training simulator fidelity was improved and the crews were briefed and trained to recognize and correct idiosyncrasies and problems previously experienced in flight. The area of antenna management was improved by the incorporation of high gain antenna gimbal angle and mode switch telemetry, updating procedures, and developing a look-angle display for determining optimum up-link command times. The command and service module communications system is discussed further in references 4-54, 4-55, and 4-56.

### 4.4.12 Instrumentation System

The instrumentation system of the command and service modules consisted of data acquisition and storage components and central timing equipment. Transducers and signal conditioners were located throughout the spacecraft, each in the proximity of the parameter to be measured. On a typical manned spacecraft, about 125 parameters were measured by this system, which interfaced with all other systems. Sensors were provided to measure pressure, temperature, quantity, flow, attitude, attitude change rate, voltage, current, frequency, radio power, vibration, strain, acoustic noise level, acceleration, heat shield char, ablation and heat flux, nuclear particle flux, biomedical parameters, and to perform gas analysis of the spacecraft atmosphere. There were different measurements for each spacecraft because the mission objectives were different for each flight and instrumentation emphasis changed as experience was gained. The data storage

equipment was a magnetic tape recorder large enough to hold all data generated by the spacecraft while out of communications with a ground station. This condition occurred when the direct line between the spacecraft and ground station was occluded by a portion of the earth or moon. The central timing equipment provided timing signals to other systems, including elapsed time from launch, to the telemetry system.

In some cases, instrumentation hardware was integrated with other systems and delivered to the prime contractor already installed. Such items were not considered a part of the instrumentation system, per se, and are not included in this discussion.

The first stage in the instrumentation development process was the establishment of measurement requirements. An instrumentation equipment list was then compiled and procurement activity was undertaken to obtain the items on the equipment list. As the hardware was developed, it was subjected to testing that provided assurance that the hardware (1) could perform in the operational environment to which it would be subjected, (2) could conform to the accuracy requirements of its specification, and (3) could reasonably be expected to last as long as necessary. Design proof tests, qualification tests, off-limits tests to destruction, and accuracy determination were performed on each type of measurement device. After passing these tests, the hardware was subjected to acceptance testing, pre-installation testing, testing after installation on the spacecraft, and system checkout.

Because of the extensive testing, nearly all the following deficiencies were discovered early in the program.

a. A rather high rate of rejection at pre-installation inspection

b. Mechanical damage by personnel working in the spacecraft

c. Susceptibility of some instruments to radio-frequency interference

d. Calibration changes

e. Instability of output

The high rate of rejection was found to be caused by a difference between the acceptance test procedure used at the vendor's plant before shipment and the pre-installation test procedures performed at the prime contractor's plant. This was solved by making the two procedures identical, including the fail/pass criteria. The mechanical damage problem was solved by providing appropriate precautionary instructions to the manufacturing and checkout personnel. Susceptibility to interference was reduced to an acceptable level by changing the electrical grounding techniques. Calibration shifts and instability of output were both traced to oscillations of the scaling amplifiers and regulators within the signal conditioners and were eliminated by the addition of small shunt capacitors.

The tape recorder used for data storage was initially designed and built to the requirements of the reference lunar mission; the recorder had to be modified for the earth-orbital missions and the lunar-orbital science missions. The first modification, to meet the requirements of the earth-orbital missions, consisted of strengthening the transport mechanism to extend its specified life from 14 to 200 hours. The second modification, for the lunar-orbital science missions, added a digital channel for mission scientific data and doubled the recording time capacity.

The central timing equipment was modified to provide a serial time code output for the scientific experiment hardware and data system, in addition to the original parallel output.

Very few flight failures occurred. From Apollo 7 through Apollo 17, there were three cases in which the measurement hardware produced no output, three cases of noisy outputs from which data could be derived by averaging, and three cases in which the output was slightly out of tolerance. These nine cases represent only about 0.6 percent of the instrumentation system hardware flown on the 11 spacecraft.

The data storage equipment operated thousands of hours without data loss except for a few minutes during the entry of the Apollo 10 command module and about a half minute during transearth coast of the Apollo 15 command and service module. The Apollo 10 data loss was caused by deformation of the tape recorder case due to the pressure increase of entry; strengthening the case corrected this condition for later flights. The half-minute loss of data on Apollo 15 was traced to the tape leader material, which had transferred to the first few feet of the magnetic tape. This problem was corrected for later missions by carefully wiping the first few feet of the tape and leader material before installing the magnetic tape.

Several recommendations for instrumentation systems may be made from the experience derived from the Apollo program. A realistic approach to measurement requirements and to the accuracy actually needed makes it possible to instrument for almost any operational parameter. Attempts to provide large numbers of exotic measurements at unattainable accuracies merely waste time and money. In nearly all measurements, an overall accuracy of plus or minus 5 percent will suffice. A workable ground rule for establishing the number of measurements is that one measurement at each point in each system where a change of physical state occurs is necessary and sufficient. Simple hardware redundancy is not as effective in protecting against instrumentation hardware failures as is a matrix of measurements whereby data missing due to hardware failures can be derived from other measurements. Flexibility to change measurements by deletion, addition, and substitution should be built in from the beginning.

The development and performance of the command and service module operational instrumentation system is discussed in greater detail in reference 4-57.

## 4.5 LUNAR MODULE DEVELOPMENT PROGRAM

### 4.5.1 Introduction

The decision to utilize a lunar rendezvous mission technique was made in July 1962, and the contract for the design and development of the lunar module was awarded four months later. The lunar module was unique in that it was the first manned spacecraft which was specifically designed for operation totally outside of the earth's environment. Based on the mission plan, the spacecraft was designed to (1) land two astronauts on the moon from lunar orbit, (2) support lunar surface exploration and the deployment of scientific experiments, and (3) return the astronauts and lunar samples to the command and service module in lunar orbit.

No parallel equivalent to the command module Block I and Block II development philosophy existed in the lunar module development, although the lunar module was reconfigured in the late stages of the Apollo program to accommodate an extended lunar stay capability. Unlike the command module development program, the lunar module development program emphasized ground tests and minimized unmanned flight development tests. As planned, LM-1 was the sole unmanned lunar module which was flight tested with operative systems. In all, only three production lunar modules were flight tested prior to the Apollo 11 lunar landing mission (see sections 2.3 and 2.4) and there were no active boilerplate flight items in the program. The general configuration of the lunar module is shown in figure 4-18.

### 4.5.2 Test Articles and Ground Test Program

The lunar module development program utilized a series of ground test vehicles for establishing the production configuration and man-rating the flight vehicles. In increasing order of development complexity, the types of vehicles employed were mockups (M series), test modules (TM series), and lunar module test articles (LTA series). In some instances, the total lunar module configuration was simulated; however, in other instances, only the area of test interest was simulated. The following paragraphs identify the test articles and indicate the types of ground test programs that they supported.

4.5.2.1 Mockups.- Five lunar module mockups were constructed during the course of the development program. A wooden mockup, designated M-1, was constructed for the purpose of studying the ascent stage cabin configuration requirements. M-3 was an ascent and descent stage external

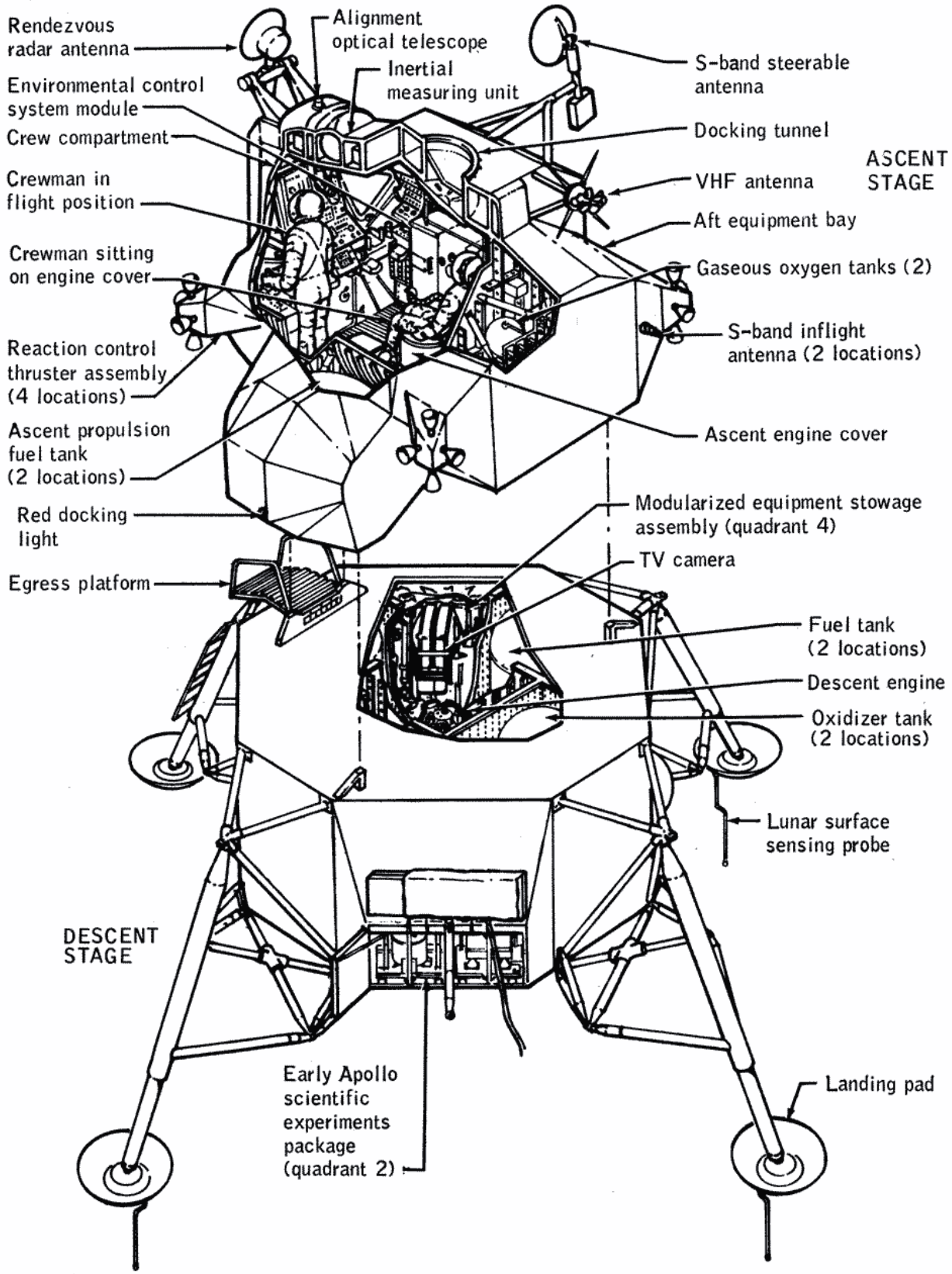


Figure 4-18.- Lunar module configuration for initial lunar landing.

configuration article. It was used for verification of the spacecraft/launch vehicle adapter interface and for facility verification. The M-4 mockup was constructed to study the descent stage engine compartment requirements. M-5 was a mockup for the evaluation of the spacecraft equipment installation. Mockup M-6 was developed to support new flammability test requirements imposed after the Apollo I fire.

4.5.2.2 Test Models.- Sixteen test models were used in the lunar module development program. Most of the test models were specialized for specific investigations and were not complete ascent and descent stage configurations. These models were used for such things as crew visability and mobility studies (TM-1), radio frequency tests (TM-3), pyrotechnic studies of ascent/descent stage separation (TM-4), lightweight descent stage landing studies and stowage reviews (TM-5), rendezvous radar antenna tests (TM-6 and TM-7), landing radar tests (TM-8), reaction control system plume impingement tests (TM-9), battery installation thermal tests (TM-13), docking tunnel tests (TM-14), descent stage thermal tests (TM-15 and TM-17), and descent stages structural tests (TM-16).

4.5.2.3 Lunar Module Test Articles.- Eight lunar module test articles were constructed. The LTA-B article was used solely to provide ballast, in the form of the lunar module configuration, for the Apollo 8 mission. The LTA-1 test article was used for ground testing the lunar module electrical and electronic systems and to verify the checkout procedures which were developed for flight spacecraft. Like all of the LTA series, LTA-1 was constructed, inspected, and tested by the same controlled process as a production flight vehicle. Also, this test article was designed in parallel with the LM-1 unmanned flight vehicle, but had an earlier forward hatch configuration. Test article LTA-2 was first used to test the response to the launch vehicle vibration environment. It was later refurbished and used as payload ballast for the Apollo 6 launch vehicle. LTA-3 was a static and dynamic structural test article. Designed in parallel with LM-3, the LTA-3 test article was a product of the so-called super weight improvement program which was implemented for LM-3 and subsequent vehicles to decrease and control the growing lunar module weight. The LTA-5 test bed was a complete descent stage and was used for descent stage propulsion testing at the White Sands Test Facility. Man-rating testing was performed on LTA-8 in the Space Environment Simulation Laboratory at the Manned Spacecraft Center (sec. 11.4). This test article was essentially the same as the LM-1 spacecraft. Originally built as a test article for use by the command and service module prime contractor, LTA-10 was later used on the unmanned Apollo 4 mission as instrumented ballast for the launch vehicle. The LTA-11 test vehicle supported the extended lunar stay requirements for the Apollo 15, 16 and 17 missions, and was used as a drop test vehicle in conjunction with the testing of the lunar roving vehicle.

### 4.5.3 Unmanned Flight Test Program

The Apollo 5 mission featured the unmanned flight testing of the first production lunar module, designated LM-1. As an unmanned vehicle, LM-1 had both automatic and remote-controlled programming capability to operate the active onboard systems. The LM-2 vehicle was produced as a "sister ship" to LM-1, but had optional manned/unmanned flight capability. Originally intended to be used as the first manned lunar module on Apollo 8, it was diverted to support the ground test program in the Manned Spacecraft Center's vibro-acoustic test facility after Apollo 8 became the command-and-service-module lunar orbital mission.

### 4.5.4 Manned Vehicles

The lunar module development program was continued during the production of the flight spacecraft by the continual updating of flight hardware to reflect changes indicated from mission experience and new program requirements. The most program-effective single step was the aforementioned super weight improvement program. This program employed some of the most sophisticated engineering design and manufacturing techniques used to date in the production of manned spacecraft.

4.5.4.1 Apollo 9 through Apollo 14 Lunar Modules.- The vehicles used in the Apollo 9 and Apollo 10 missions were developed for use in earth orbit and lunar orbit and, as such, had numerous differences from the lunar landing spacecraft. Table 4-V indicates the major differences.

TABLE 4-V.- SUMMARY OF MAJOR CHANGES TO LUNAR MODULE

| Function/System | Changes |
|---|---|
| Changes Implemented for Apollo 9 and Apollo 10 Missions (LM-3 and LM-4) | |
| Structures | Doublers added to upper deck of descent stage.<br>Apollo lunar surface experiment package and modular equipment stowage assembly mass simulated.<br>Descent battery support structure modified to mount two batteries in quadrant I and two batteries in quadrant IV.<br>Emergency detection relay box support structure modified to mount one box on ascent stage and one box on descent stage.<br>Crushable honeycomb inserts added to landing gear leg assemblies. |
| Thermal control, passive | Insulation lightened by reducing number of layers of insulation in blankets.<br>Window shade material thermal capability increased from 200° to 300° F. |
| Pyrotechnics | Electro-explosive devices batteries and relay boxes relocated, one mounted on ascent stage and one mounted on descent stage.<br>Number of circuit interrupters reduced from three to two (LM-4). |
| Electrical power | Four descent stage batteries relocated.<br>Descent electrical control assembly modified to allow command module to power ascent stage alone. |
| Instrumention | Development flight instrumentation deleted (Apollo 10 only). |
| Communications | Digital uplink assembly added to replace digital command assembly.<br>Ranging tone transfer assembly added for command and service module/lunar module VHF ranging. |
| Radar systems | Landing radar modified for earth orbital mission and lunar orbital mission, per respective flights. |

TABLE 4-V.- SUMMARY OF MAJOR CHANGES TO LUNAR MODULE - Continued

| Function/System | Changes |
|---|---|
| Changes Implemented for Apollo 9 and Apollo 10 Missions - Concluded (LM-3 and LM-4) | |
| Guidance and control | Ascent engine arm assembly modified to allow unmanned abort guidance system firing.<br>Alignment optical telescope weight reduced.<br>Reaction control system thruster-on time was increased for a given input signal. |
| Descent propulsion | Helium explosive valve reinforced by adding an external braze. |
| Ascent propulsion | Rough combustion cutoff assembly deleted.<br>Propellant tank support cone installation changed from rivets to bolts.<br>Relief valves modified to gold braze with notched poppet step. |
| Environmental control | Suit circuit assembly changed from titanium to aluminum for better fan operation.<br>Primary sublimator feedline solenoid valve deleted in water management system. |
| Changes Implemented for Apollo 11 Through Apollo 14 Missions (LM-5 Through LM-8) | |
| Structures | Provisions added for scientific equipment package.<br>Modular equipment stowage assembly added in quadrant IV of descent stage.<br>Docking structure, descent stage shear webs and base heat shield modified as part of weight reduction program.<br>Quadrant IV modified to support modular equipment transporter (LM-8 only).<br>Forward landing gear surface sensing probe removed and length of remaining probes increased. |

TABLE 4-V.- SUMMARY OF MAJOR CHANGES TO LUNAR MODULE - Continued

| Function/System | Changes |
|---|---|
| Changes Implemented for Apollo 11 Through Apollo 14 Missions - Continued (LM-5 Through LM-8) | |
| Thermal control, passive | Descent stage base heat shield changed from Kapton to Kel-F to prevent landing radar interference.<br>One layer each of nickel foil and Inconel foil added to landing gear struts.<br>Landing gear insulation reduced for weight savings of 27.2 pounds.<br>Thickness of forward hatch outer shielding increased. |
| Electrical power | Descent stage batteries modified by adding potting insulation across top of cells and providing an overboard vent manifold for cell vent valves. Manifold vent valve and core vent valve added to control differential pressure across cell cores (LM-8). |
| Instrumentation | Ascent propulsion system helium tanks temperature measurements deleted and redundant pressure measurements added. Temperature measurements added to ascent stage water lines and descent propulsion system engine ball valves. |
| Communications | Extravehicular activity antenna and S-band erectable antenna added.<br>Television camera stowed on modular equipment stowage assembly. |
| Radar | Crew control added to break lock and search for main beam of landing radar; circuitry provided to prevent computer strobing pulse from appearing as two pulses.<br>Override switch added to rendezvous radar for primary or secondary gyro select; heaters added to gyro assemblies. |
| Guidance and control | Primary guidance and navigation control function to descent engine gimbal drive actuators changed from brake to constant damping.<br>Primary guidance program changed to allow return to automatic control for landing in the event that dust obscured visibility.<br>Ascent engine arming assembly removed from control electronics. |

TABLE 4-V.- SUMMARY OF MAJOR CHANGES TO LUNAR MODULE - Continued

| Function/System | Changes |
|---|---|
| Changes Implemented for Apollo 11 Through Apollo 14 Missions - Concluded (LM-5 Through LM-8) | |
| Reaction control | Regulator pressure upper warning limit increased from 205 to 218 psia. |
| Descent propulsion | Bypass line added around fuel/helium heat exchanger for pressure equalization in case of heat exchanger freezeup.<br>Anti-slosh baffles added to descent propulsion tanks; propellant quantity gaging system modified to increase accuracy at low levels.<br>In-line orifice added to lunar dump valve system and installation of valve assembly reversed. |
| Ascent propulsion | Lightweight thrust chamber incorporated in engine assembly.<br>O-ring added to flanged joints between feed lines and fill and drain lines; Teflon used on oxidizer side and butyl rubber on fuel side. |
| Environmental control: | |
| Atmospheric revitalization section | Suit water cooling assembly added.<br>Cabin temperature valve, regenerative heat exchanger and cabin air recirculation assembly deleted.<br>Accumulator quantity indicator in suit cooling assembly modified.<br>Carbon dioxide sensor line relocated upstream of suit fans. |
| Pressurization | Water and oxygen quick disconnects changed to allow 5-degree misalignment.<br>Descent stage high pressure oxygen regulator pressure increased from 950 to 990 psig. |
| Water management | Redundant water regulator added in secondary coolant loop.<br>Spool in water tank select valve redesigned.<br>Backup measurement added for descent stage water tank pressure. |
| Thermal control, active | Muffler added to water/glycol pump outlet. |

TABLE 4-V.- SUMMARY OF MAJOR CHANGES TO LUNAR MODULE - Continued

| Function/System | Changes |
|---|---|
| Changes Implemented for Apollo 15 Through Apollo 17 Missions (LM-10 Through LM-12) | |
| Structures | Lower midsection and lower left and right side consoles of ascent stage modified to carry an additional 40 pounds of lunar samples at each location.<br>Descent stage modified to accept larger propellant tanks, one additional oxygen tank and one additional water tank.<br>Quadrant I modified to accept lunar roving vehicle.<br>Quadrant III modified to accept lunar roving vehicle tool pallet.<br>Descent stage batteries relocated to rear outrigger.<br>Size of modular equipment stowage assembly increased. |
| Electrical power | Fifth battery added to descent stage.<br>Battery relay control assembly added.<br>Capacity of descent batteries increased from 400 to 415 ampere-hours. |
| Displays and controls | Caution and warning modified to prevent spurious signals.<br>Guards added over several displays and meters to prevent glass breakage from internal pressure. |
| Reaction control | Engine isolation valves deleted. |
| Descent propulsion | Capability added for 1200 pounds of additional propellant.<br>Thrust chamber changed from ablative silicone to ablative quartz.<br>Ten-inch nozzle extension added.<br>Propellant tank balance lines deleted and trim orifices added.<br>Oxidizer lunar dump valve changed to fuel type. |

TABLE 4-V.- SUMMARY OF MAJOR CHANGES TO LUNAR MODULE - Concluded

| Function/System | Changes |
|---|---|
| Changes Implemented for Apollo 15 Through Apollo 17 Missions - Concluded (LM-10 Through LM-12) | |
| Environmental control | Additional lithium hydroxide canisters provided for extended stay.<br>One descent stage oxygen tank added and portable life support system fill pressure increased to approximately 1400 psi.<br>One descent stage water tank added. |
| Thermal control, active | Heaters added to modular equipment stowage assembly.<br>Manual shutoff valve added to descent stage coolant loop to allow increased battery operating temperatures. |

4.5.4.2 Extended-Stay Lunar Modules The Apollo 15 through Apollo 17 mission lunar modules were modified to support the program requirements for greater science payload and a longer stay time, and to carry a lunar roving vehicle for lunar surface exploration. These vehicle changes are also shown in table 4-V.

## 4.6 LUNAR MODULE SYSTEMS DEVELOPMENT AND PERFORMANCE

### 4.6.1 Introduction

Significant aspects of the development and flight performance of the lunar module systems are presented in this section. Brief systems descriptions are given where necessary but are not generally included. Complete descriptions of the lunar module systems are given in references 4-15 through 4-23 and 4-45. The topics discussed in this section have, in many cases, been discussed in more depth in individual Apollo Experience Reports. These and other documents are referenced where appropriate.

### 4.6.2 Structures

The structure of the lunar module was designed and manufactured to keep weight at a minimum. The design certification depended primarily on the ground test program. Formal analyses were made to supplement the test program and to serve as a baseline for each mission. Testing at the component level was conducted when it was impractical to impose the required environment at the vehicle level.

Significant problem areas encountered were shear panel fatigue, panel thickness control, stress-corrosion cracking, machined strut tolerances, and interchangeable parts similar in appearance but structurally different.

4.6.2.1 Shear panel fatigue and thickness control.- The descent stage primary structure was made up mainly of shear panels (fig. 4-19) that were designed as diagonal tension field beams. Under load, this type of beam developed the required strength after the shear web had developed buckles. The shear panel webs were chemically milled to provide a minimum-weight structure. The minimum thickness of the original panels was 0.006 inch with a tolerance of ±0.002 inch. During dynamic testing, fatigue cracks (fig. 4-19) were noticed at the transition zone between the shear web and the peripheral rivet land. The diagonal tension buckles in the shear web terminated at the rivet land with a small radius of curvature that resulted in a region of stress concentration. The dynamic test data indicated that the buckles oscillated in the plane of the web. Under static load, the stresses induced in the panel were not excessive; however, the dynamic test environment caused high-stress low-cycle fatigue at the web/land intersection. As an interim modification on the early vehicles, a fiberglass frame was applied around the periphery of each panel of the shear panel as shown in figure 4-19. Because the fiberglass modification was heavy, all shear panels in the descent stage were later redesigned to reduce weight.

While a solution to the shear web fatigue problem was being developed, the thickness of the chemically milled webs was found to be under tolerance, and small holes were discovered in some of the webs. These defects were attributed to inadequate control of the original sheet thickness and the fact that the variation in thickness was duplicated by the chemical milling process. This problem was solved by more rigorous selection of the original sheet material and by closer final inspections.

4.6.2.2 Stress corrosion.- In November 1967, while the LTA-3 aft equipment rack support struts were being load-calibrated for static tests, cracks were discovered on the ends of the struts where the end fittings were mechanically attached. Investigation of all struts revealed 23 cracked struts in 264 parts inspected. These failures were attributed to stress corrosion caused by the stresses induced when the end fittings were clamped. The large number of failures precipitated a review of the entire structure for parts susceptible to stress corrosion in January 1968. As a result of the review, all aluminum fittings susceptible to stress corrosion were identified and inspected, the heat treatment was changed from 7075-T6 to 7075-T73, required shims were provided, and protective paint was added to susceptible fittings on all unassembled vehicles. During the inspections, many stress corrosion cracks were found, which indicated that the problem was chronic throughout the structure. In december 1968, an additional review was conducted to determine which stress-corrosion-sensitive fittings were structurally critical; that is, which

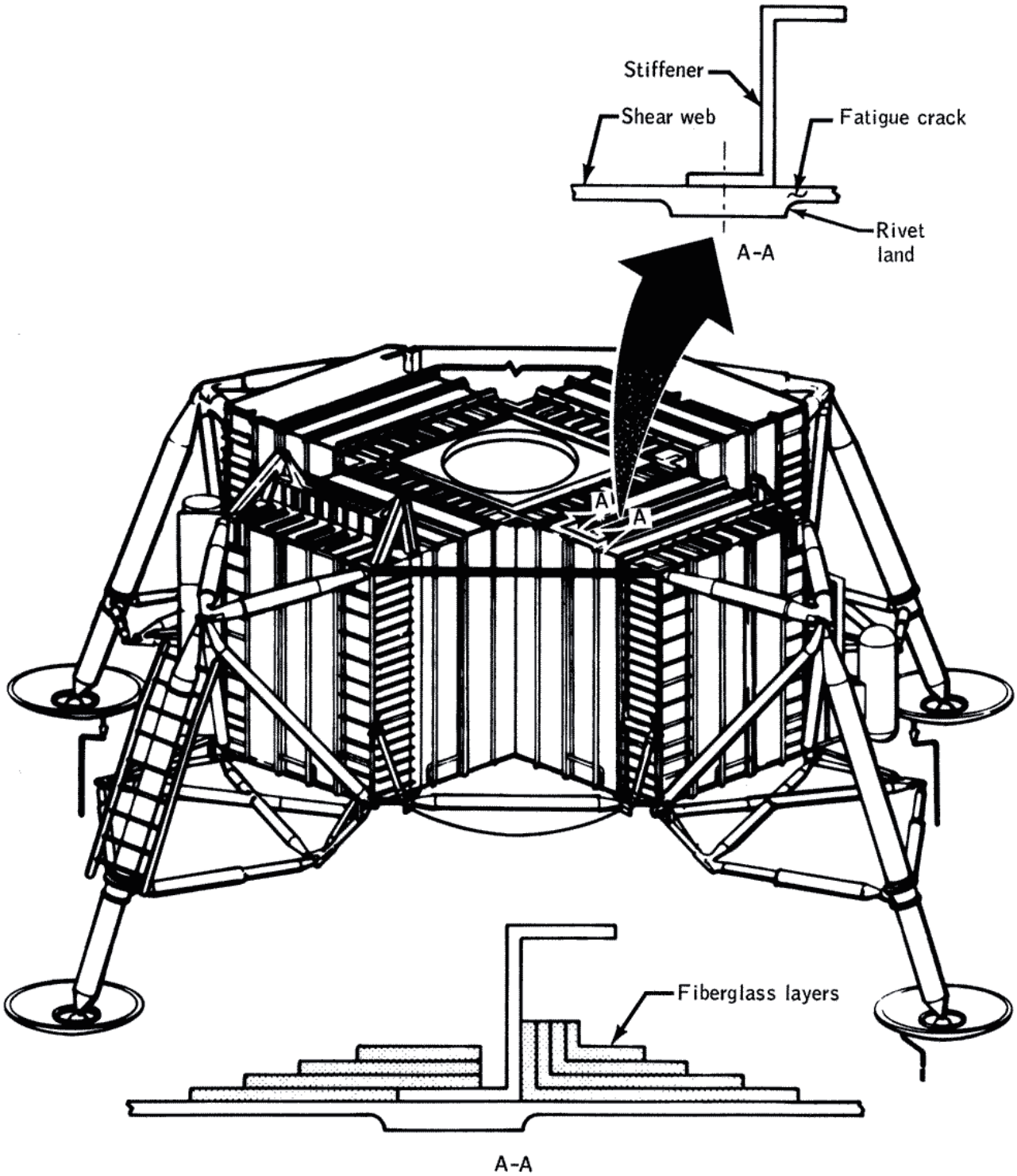


Interim modification

Figure 4-19.- Lunar module desent stage structure.

part, if cracked in the predicted location, would not meet the required factor of safety. Approximately 40 critical fittings were identified and were re-heat-treated, redesigned, or modified. Also, liquid shimming was used to guarantee a perfect match between the critical parts and to prevent any potential stress corrosion cracking from clamp-on stresses. Additional information on the problem of stress-corrosion cracking may be found in section 4.7 and in reference 4-59.

4.6.2.3 Internally machined struts.- Sixteen outrigger struts (four per beam) provided the support for the lunar module in the lunar module adapter and for the primary landing gear struts (fig. 4-19). The lower outrigger struts were straight tubular members approximately 53 inches in length and 3.5 inches in diameter. Each strut had a wall thickness of 0.039 inch and had closed, integral, tapered end fittings. The struts were machined from bar stock and had to be blind-machined over the entire length with a varying internal diameter.

During the static structural test to verify structural adequacy of the descent stage for the Apollo 15 lunar module and those of subsequent lunar modules, a lower outrigger strut failed because an erroneously machined groove on the internal diameter was not discovered by inspection. The groove was located at the transition from the tube to the end fitting. The inspection method used at that time consisted of a spot check of the wall thickness. This method detected overall discrepancies but was not capable of detecting local defects such as grooves. The inspection methods were improved and approximately 25 structural parts with manufacturing defects were found.

4.6.2.4 Parts interchangeability.- During the inspection of the internally machined struts, parts similar in appearance but structurally different were found to have been interchanged on the vehicles. Because of the emphasis on lunar module weight reduction, many parts were identical except for a difference in thickness of a few thousandths of an inch. The entire structure was reviewed and approximately 2700 parts were identified that could possibly be interchanged. Each part was reviewed structurally to determine whether the required factor of safety would be maintained if the part were interchanged. Approximately 260 parts were identified that would not provide adequate strength. These parts were inspected on all vehicles to verify that each part was installed in its proper location.

4.6.2.5 Flight performance.- The adequacy of the lunar module structure to meet the conditions of the design environment was verified on 12 Apollo missions. These missions included two developmental flights in which test articles were flown (Apollo 4 and 6), one unmanned lunar module flight (Apollo 5), and nine manned flights (Apollo 9 through 17). No problems associated with the primary lunar module structure occurred. However, there were several secondary structure anomalies. These anomalies and the corrective actions taken are summarized in reference 4-60 and are reflected in appendix F.

### 4.6.3 Thermal Control System

The basic thermal control philosophy was to make the lunar module a spaceborne thermos bottle; that is, to isolate the interior structure and equipment from the external environment so that it would remain within acceptable temperature limits without the need of any power or moving mechanical devices such as heaters or louvers. Multilayer insulation blankets and external thermal control coatings were used to isolate structure and components from the space environment and to minimize the average internal temperature change.

To realize the maximum benefits from isolation, internal temperature gradients had to be reduced. Many components within the cabin dissipated heat and were not actively cooled. To prevent overheating of these components, high-emittance coatings were used over large portions of the cabin interior to distribute the heat more uniformly. The thermal mass of water and propellant tanks was very high in relation to the heat rejection capability. For this reason, tank temperatures did not change as rapidly or as extensively as those of the structure. Moreover, the acceptable operating range was also more restrictive and great care was used in selecting tank coatings. Moderately low-emittance coatings ($\varepsilon$ = 0.20 to 0.30) on the tank yielded good results. Thus, the tanks radiated part of the heat stored in them to the structure and part to the components to compensate for heat loss through the insulation blanket, while still providing acceptable propellant and water temperature. The performance of the multilayer insulation blankets (thin sheets of plastic coated on one side with a microscopic layer of aluminum) was therefore extremely critical.

Although multilayer insulation had been used on small pieces of equipment, none had been used on a vehicle the size of the lunar module and under conditions requiring such a high level of effectiveness. The role of the insulation was to prevent heat transfer into or out of the vehicle by thermal radiation. The aluminized sheets were to serve as multiple radiation shields and, as such, should not contact each other. Therefore, means of fastening the sheets to the structure without compacting them had to be devised. An additional problem was that any gases trapped between the layers would expand in the vacuum of space and cause the sheets to balloon. The multilayer insulation blankets were vented to space in order to reduce blanket internal pressure, which was necessary for an extremely effective insulation system.

An extensive fastening and venting test development effort not only yielded a lunar module thermally similar to a thermos bottle (the lunar module average temperature decreased from 70° F to 65° F during the translunar coast period) but greatly advanced the knowledge of insulation manufacturing and application for nonaerospace usage. Aluminum-coated Kapton used for the multilayer insulation blankets had previously been available only in 1-inch-wide strips similar to everyday plastic adhesive tape; now this material can be obtained in continuous sheets 5 feet or more in width. Thermal control coatings previously available only in laboratory specimen sizes can now be found in gallon quantities.

### 4.6.4 Landing Gear

The landing of the lunar module on the surface of the moon was one of the crucial events of an Apollo mission. During touchdown, the lunar module landing gear brought the vehicle to rest, prevented toppling, absorbed the landing impact energy, and limited the loads on the lunar module structure.

A landing gear assembly, in the deployed position, is shown in figure 4-20. Energy absorption capability was provided by honeycomb cartridges in the single primary and two secondary struts. The deployment truss served as a structural-mechanical assembly between the landing gear struts and the descent stage structure. Each landing gear leg was retained in the stowed position by a pyrotechnic uplock device. When the device was fired, a titanium strap attached to the primary strut and descent stage was severed, thus allowing the landing gear to be deployed and locked by mechanisms on each side of the landing gear assembly.

The primary strut, shown in figure 4-20 was attached to the lunar module descent stage outrigger assembly and consisted of a lower inner cylinder that fitted into an upper outer cylinder to provide compression stroking at touchdown. The footpad, which was attached to the lower end of the inner cylinder by a ball joint fitting, was approximately 3 feet in diameter and was designed to support the lunar module with a surface bearing strength of 1.0 pound per square inch as well as to maintain sliding capability after having impacted rocks or ledges during touchdown. Attached to each of three of the footpads was a 68-inch probe designed to sense lunar surface proximity and to signal the Lunar Module Pilot so that he could initiate descent engine shutdown. The secondary struts (fig. 4-20) also had an inner and an outer cylinder and were capable of both tension and compression stroking.

During ground tests, the landing gear was exposed to all significant flight environments, including vehicle drop tests under simulated lunar gravity conditions. The landing gear touchdown performance results may be summarized by considering two of the more important parameters: touchdown velocities and surface slope at the touchdown point. In all cases, the touchdown velocities were within design limits, averaging approximately 3.5 feet per second vertical velocity and approximately 2.0 feet per second horizontal velocity. Specification touchdown velocities were as high as 10 feet per second vertical and 4 feet per second horizontal. Generally, the landings occurred on low slopes, averaging approximately 5 to 6 degrees. The steepest touchdown slope of 11 degrees occurred on Apollo 15.

Gear stroking in all landings was minimal. The lunar soil absorbed an estimated 60 percent of the touchdown energy through footpad penetration and sliding, resulting in secondary strut tension stroking of about 4 inches. A small amount of primary strut stroking occurred in some instances.

The performance of the landing gear was satisfactory and met the design requirements. Details of the landing gear performance may be found in reference 4-61.

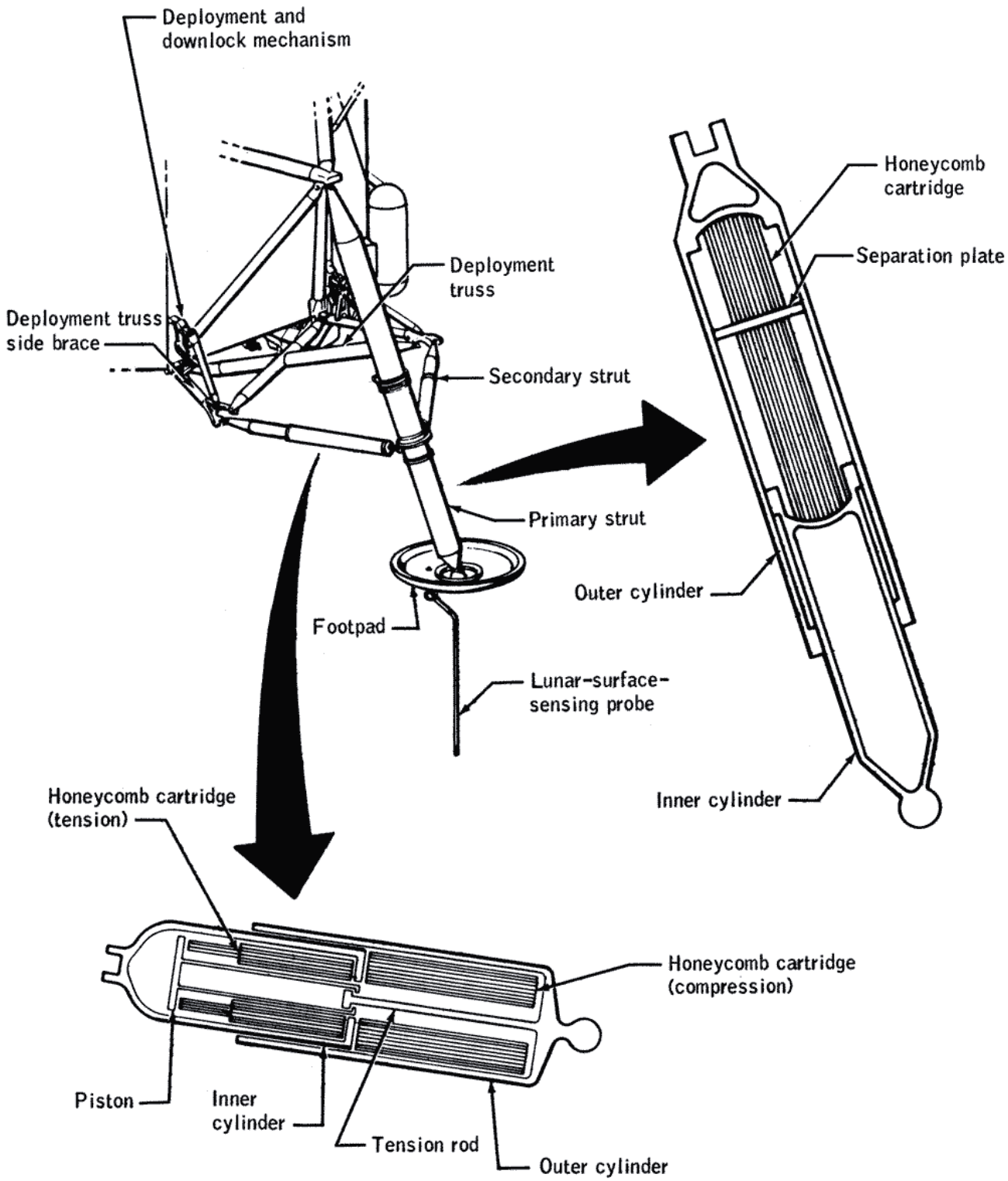


Figure 4-20.- Landing gear.

### 4.6.5 Electrical Power System

4.6.5.1 Batteries.- The basic lunar module primary power requirements through Apollo 14 were met by two ascent batteries rated at 296 ampere-hours each and by four descent batteries rated at 400 ampere-hours each. With the increased lunar stay time requirements of Apollo missions 15 through 17, the descent stage batteries were redesigned to deliver 415 ampere-hours each and five batteries were installed. Both the ascent and descent batteries were delivered dry and fully charged. They were activated at the launch site by adding potassium hydroxide electrolyte just prior to installation into the spacecraft.

Each ascent battery weighed 124 pounds and was approximately 5 by 8 by 36 inches. The two batteries normally provided power for lunar lift-off and power for rendezvous and docking with the command and service module. If necessary, they also could have provided on-line support of the descent batteries in the event of an abort during lunar descent. In case one ascent battery had failed, the other could have provided sufficient power to accomplish safe rendezvous and docking.

Each descent battery weighed 133 pounds and was approximately 9 by 10 by 17 inches. The descent batteries provided small heater loads early in the mission, lunar descent power, and lunar surface stay power. In terms of total energy requirements for both the four- and five-battery-configuration missions, there was an energy margin of approximately one battery; however, in terms of the rate of energy withdrawal, one battery could, under emergency conditions, meet the entire lunar module power demands. Two batteries could nominally supply power to the limits of their specified capacity at total spacecraft loads.

The lunar module electroexplosive device power requirements were met by the same pyrotechnic battery design used in the command module. However, the battery was requalified to the lunar module power and environmental requirements. The battery weighed 3.5 pounds, was approximately 3 by 3 by 6 inches, and has a capacity rating of 0.75 ampere-hours. Two batteries were installed — one on the ascent stage and one on the descent stage. Each of the batteries could meet all power requirements and the circuits were designed so that redundant power was provided for the electroexplosive devices. The lunar module and command module pyrotechnic batteries were identical, with one exception. The lunar module battery contained a test port that had been in the original design of the command module battery but was removed to allow terminal guards to be installed. The test port was removed from the Apollo 16 and 17 lunar module batteries to allow complete interchangeability with the command module batteries.

The lunar module batteries performed above the specified requirements when emergency power was needed during Apollo 13 after the loss of command and service module fuel cell power. However, postflight analysis revealed that an unexplained current spike occurred during transearth coast. The spike was associated with the occurrence of a "thump and snowflakes" reported by the crew. The postulated cause was that venting of potassium hydroxide by one of the descent batteries created a short circuit, igniting the mixture of hydrogen and oxygen normally produced by a silver-zinc battery. The resulting explosion blew the battery cover off and vented the electrolyte to space, thus causing the "thump and snowflakes." Although this specific failure mode could not be reproduced and the battery under question continued to operate satisfactorily throughout the mission, a number of significant design changes was made to preclude the possibility of any future explosions.

Another flight problem occurred during the translunar coast period of the Apollo 14 mission. A lunar module ascent battery indicated a lower-than-expected open circuit voltage (0.3-volt decay). Systems specialists were concerned that the battery might not support lunar descent or ascent, leaving the ascent stage with no power source redundancy. Also, mission rules precluded making a lunar landing with only one good battery. Real-time ascent battery testing, both on the ground and in the lunar module, supplied the necessary confidence that the battery would perform the required flight functions. No differences between the test battery and the flight battery were observed throughout the mission.

Two significant battery problems occurred in connection with the Apollo 15 mission. First, cracked cell cases were found in two descent batteries being prepared for installation on the lunar module (LM-10), the first lunar module with the five-battery configuration for a lunar surface stay of up to 72 hours. The cracks were primarily due to faulty assembly techniques. In addition, it was discovered that a bad batch of plastic was used in that production lot of batteries. Although extensive analysis, testing, and modification of flight preparation procedures allowed sufficient confidence to fly the LM-10 battery design, drastic structural deficiencies were postulated. As a result, even more extensive design changes were incorporated than those following the incident of Apollo 13.

The second problem, low battery capacity, became evident after the Apollo 15 mission during ground testing of spare lunar module descent batteries that had been activated prior to flight. The cause of the low capacity was a high percentage of zinc oxide in the negative plates. Improvements were made in manufacturing process control, acceptance test procedures, and inspection and assembly techniques with the result that a very high degree of confidence in battery performance was achieved. Adequate performance of the batteries on the last two Apollo missions demonstrated that the corrective measures were successful.

4.6.5.2 Power conversion and distribution.- The lunar module power distribution system consisted of equipment that controlled and regulated the electrical power; transmission lines that routed the power from the sources to the primary buses and from the primary buses to secondary local or remote buses; distribution boxes that controlled the switching and provided circuit protection; and conversion equipment such as inverters, converters, battery chargers, transformers, and rectifiers.

The system voltage and power quality were among the first requirements defined. Standards were set for voltage, steady-state voltage regulation limits, abnormal voltage limits, and voltage transients. Thus, all users of power could design and test to the same electrical specifications. Additional requirements were defined such that wiring for redundant systems and controls was physically separated and routed through separate connectors, and control circuitry was designed to preclude the switching of return power. These additional requirements were to preclude problems similar to the following experienced on Gemini flights. In one case, switching functions for three redundant inverters were routed through the same electrical connector. When moisture entered the unsealed connector, these functions were disabled, thereby causing complete loss of alternating-current power. The second problem was inadvertent reaction control system thruster activity believed to have been caused by a return power circuit faulting to ground.

During tests of the power distribution system to determine adequacy of the control, protection, and component sizing, the contactors used for battery power were found to be undersized. The design required switching a maximum of 1100 amperes (based on use with fuel cells), but the batteries were capable of delivering 1700 amperes under short-circuit conditions. Therefore, the contractors were redesigned. When the fifth descent battery was added later, no additional development tests were required.

The first flight test of the electrical power distribution system showed unexpected inverter output voltage fluctuations. A review of the flight plan and data showed that pulsing gimbal motors constituted the only inverter load. When this same configuration was ground tested with the load turned off, the inverter, while trying to maintain a regulated voltage, produced an oscillating output that lasted 100 milliseconds. In flight, the gimbal motors had been turned on and off several times each second as required. This switching therefore caused the fluctuations on the inverter output that were observed during flight. When the inverters were more heavily loaded in subsequent missions, the fluctuations did not occur.

The lunar module power distribution system was also used to provide power to the command module, even though this was not a design requirement. Normally, during the translunar phase of the mission, the command module provided power to the lunar module heating loads; however, during the flight of Apollo 13, power was provided to the command module from the lunar module.

A more detailed discussion of the battery system and the power conversion and distribution system may be found in references 4-36 and 4-62.

### 4.6.6 Propulsion Systems

4.6.6.1 Descent propulsion system.- The propulsion system for the lunar module descent stage was designed to deorbit the lunar module and to allow it to hover above the lunar surface before landing. To accomplish this maneuver, a propulsion system was developed that used hypergolic propellants and a gimbaled, pressure-fed, ablatively cooled engine that was capable of being throttled. The propellants selected were nitrogen tetroxide (oxidizer) and a mixture of 50 percent unsymmetrical dimethyl hydrazine and 50 percent hydrazine (fuel).

The development and qualification of the descent propulsion system in support of the first lunar landing mission covered a period of approximately 6 years, from August 1963 to April 1969. Included within this period were component-level and system-level developmental and qualification testing. In many cases, pre-production configuration components were used in early system-level developmental testing. In the developmental and qualification testing of components and systems, extensive design-limit tests, off-limit tests, and component malfunction tests were used to determine potential design deficiencies and to document operational limits of the system. Significant problems encountered during this time period are discussed.

In the initial concept of the pressurization system for the descent propulsion system, helium was to be stored in two high-pressure tanks. As the design of the lunar module progressed, vehicle weight became a critical factor; therefore, a feasibility study was initiated early in 1964 to evaluate the use of a supercritical helium storage tank in the pressurization system. The concept consisted of storing helium at approximately minus 450° F in a thermally insulated pressure vessel. Pressure in the storage tank was allowed to rise because of a heat leak into the tank (approximately 8 to 10 Btu/hr). As helium was used from the tank, additional heat was provided to the helium to maintain the pressure. The heating was accomplished by the use of an external fuel-to-helium heat exchanger and a helium-to-helium heat exchanger located within the tank. A second fuel-to-helium heat exchanger increased the helium temperature to near ambient conditions (approximately 40° F) before the helium was supplied to the pressure regulators in the pressurization system.

By late 1964, the analysis and feasibility testing of the supercritical helium system indicated that it was operationally feasible and that a weight saving of 280 pounds could be realized by using the supercritical helium system rather than the ambient storage system. Consequently, the descent propulsion pressurization system was redesigned to incorporate a supercritical helium storage tank. Because the pressure in the supercritical storage tank increased with time, a minimum required standby time of 131.5 hours from prelaunch topoff until first usage in the nominal lunar landing was defined.

During design and development of the supercritical helium pressurization system, freezing of the fuel in the fuel-to-helium heat exchanger was found to occur during the start sequence under certain start conditions. The freezing condition was caused by the flow of a substantial amount of helium needed to bring the propellant tanks from pre-pressurization levels to regulator lockup pressure conditions, during which time no fuel was flowing through the fuel passages of the heat exchanger. A study was made of various systems to alleviate the flowing of cold helium with no fuel flow. An ambient helium pre-pressurization start bottle and an electrical heater system were the two main methods considered. The use of an ambient helium pre-pressurization start bottle was selected for overall simplicity and reliability.

In the initial fuel-to-helium heat exchanger configuration, a nickel-chromium alloy was used in bonding the side panels to the core. During the testing of LTA-5 at the White Sands Test Facility, one of the side panels separated from the core and ruptured. This rupture resulted in a gross fuel leak and subsequent fire. The cause of the failure was traced to the factory test of the rig. The heat exchanger had been subjected to cryogenic temperatures with water in the fuel passages; cryogenic temperatures caused freezing of the water that resulted in structural failure of the nickel-chromium braze material. Subsequent exposure to system operating pressure at the White Sands Test Facility resulted in rupture of the side panels. Two items were implemented to avoid this problem on subsequent vehicles. The nickel-chromium braze material was changed to a gold alloy to increase the bonding strength, and water was eliminated from cold-flow testing of vehicles when cryogenic helium was to be used in a system.

The development of the helium pressure regulator was plagued by problems. Among these problems were excessive external and internal helium leakage, cracking of the main poppet during slam starts, and the inability of the vendor to meet delivery schedules. To ensure that an acceptable regulator was available to meet flight schedules, a second source vendor was selected to develop a regulator in parallel with the original vendor.

In the initial phases of engine design definition and development, two different throttling concepts were considered. In one concept, a fixed-area injector with helium injection at reduced thrust was to be used to maintain adequate combustion efficiency. Propellant flow variation was controlled by throttling valves that used system fuel pressures to actuate the hydraulic servo-control valves. In the other concept, a single movable sleeve was used to modulate the injector fuel and oxidizer flow area. The injector sleeve was linked mechanically to two cavitating flow control valves and an electrically driven throttle actuator assembly. The variable-area injector throttling concept was selected after approximately 18 months of parallel development of the two concepts.

The descent propulsion system flight program consisted of three preliminary earth orbital and lunar orbital flights, one aborted lunar landing, and six lunar landings. All flights were successful; however, anomalies did occur during the flight program that required modifications to procedures and hardware. The significant anomalies are discussed.

A premature descent engine shutdown occurred on Apollo 5 when the descent propulsion system was fired for the first time in space. The early shutdown occurred because the descent engine thrust monitor was programmed to stop the engine if any three consecutive 2-second accelerometer samples (taken after the engine was commanded on) indicated an accumulated velocity of less than 45 centimeters per second. This criterion was based on a nominal engine start with the propellant tanks initially at full operating pressure and with the helium supply on line. The lunar module for this mission did not have an ambient-start helium storage tank, and the supercritical helium tank was isolated by the three explosive valves that were fired automatically by the pyrotechnic system 1.3 ±0.3 seconds after the first engine-on command. Therefore, the system pressures during the first descent propulsion system start, which were normal for this particular system configuration, did not rise fast enough to meet the thrust-time criterion programmed into the guidance computer. All logic circuits that could command engine cutoff or inhibit an engine start were reevaluated to prevent an unnecessary engine shutdown on subsequent flights.

During the first 35 seconds of the first descent engine firing on Apollo 9, the regulator outlet manifold pressure decreased from 235 to 188 pounds per square inch, whereas the pressure should have been maintained at 247 pounds per square inch. The temperature data indicated that the internal heat exchanger was initially blocked. At approximately 35 seconds after engine ignition, the blockage cleared and allowed the regulator outlet manifold pressure to rise to the proper operating level. An evaluation of this problem revealed that the supercritical helium servicing procedures could have entrapped air in the pressurization system, which then froze on contact with the cold helium flow in the heat exchanger. This problem was eliminated on later flights by modifying the servicing procedures to preclude the entrapment of air in the system.

The pressure in the Apollo 9 lunar module supercritical helium tank began decaying immediately after termination of the first descent engine firing; however, the normal tank response is to increase in pressure. An external helium leak was suspected as the most likely cause of the pressure decay. This suspicion was amplified by failure of an internally brazed squib valve during drop tests on LM-2 at the Manned Spacecraft Center. The failure was caused by a crack in the brazing material, which was thin in the failed area. The leak experienced during Apollo 9 was probably caused by a defective braze that was internal to the squib valve and could not be inspected. A redesigned valve that could be completely inspected was used on all subsequent vehicles.

Two problems occurred on the Apollo 11 lunar module, the first lunar landing vehicle, that required modifications to the descent propulsion system of subsequent vehicles. The first problem occurred at 685 seconds into the powered descent initiation firing. The propellant low-quantity warning light was triggered in one of the four propellant tanks, indicating a shortage of propellant. Based on remaining calculated quantities and corrected propellant quantity gaging system indications, the occurrence of the propellant low-quantity warning was discovered to

be premature by 36 seconds. The early warning was the result of propellant sloshing created by sudden vehicle maneuvers and by attitude changes. Slosh baffles were incorporated on the lunar modules for Apollo missions 14 through 17 to minimize the slosh in the tanks.

Secondly, when the propellant and the supercritical helium tanks were vented after lunar landing, the fuel-to-helium heat exchanger froze. Consequently, fuel was trapped in the fuel line between the frozen heat exchanger and the engine shutoff valves. Subsequent heating of this section of the fuel line from engine heat soakback increased the pressure in this line to an unsafe level. After 30 minutes, the fuel pressure was relieved by thawing of the heat exchanger, by failure of the line-bellows linkage, or by failure of the seals in the prevalve. The exact cause of relief was not determined. On subsequent flights, the venting procedure was modified to isolate the supercritical helium tank with the latching solenoid valves during venting of the propellant tanks and to delay supercritical helium venting until immediately before ascent from the lunar surface. On the lunar modules for Apollo 13 and subsequent missions, a bypass line around the heat exchanger was incorporated as an added safety feature to relieve the trapped fuel pressure if freezing of the heat exchanger should occur.

Because of the requirement to increase the firing time of the descent propulsion system to accommodate the increased lunar landing payload, major modifications were made to the lunar modules for the Apollo 15, 16, and 17 missions. The two most significant modifications were an increase in the volume of the propellant tanks and the use of new chamber material in the descent engine. As a result of these changes, the hover time was increased by approximately 100 seconds.

Further details of the development, testing, and flight performance of the descent propulsion system are given in reference 4-63.

4.6.6.2 Ascent propulsion system.- The ascent propulsion system was designed to provide propulsive power for launching the ascent stage of the lunar module from the surface of the moon into lunar orbit for rendezvous with the orbiting command and service module. The ascent engine was a fixed-thrust, restartable, bipropellant rocket engine that had an ablatively cooled combustion chamber, throat, and nozzle. Propellant flow to the ascent engine combustion chamber was controlled by a valve package assembly that was equipped with dual passages for the fuel and the oxidizer and had two series-connected ball valves in each flow path.

Proven manufacturing techniques, design integrity, and ground-based testing were used in the development of the ascent propulsion system. The plan was to test and evaluate materials, components, and assemblies in progressively integrated configurations, using various test rigs and prototype structural simulators. The most significant tests conducted during the development and qualification of the ascent propulsion system were accomplished by using propulsion system test vehicle PA-1 at the White Sands Facility. This test vehicle incorporated essentially all of the flight-weight components and functionally duplicated the flight ascent propulsion system. The intent of these tests was to demonstrate that the system could function properly under all conditions that could be expected during a lunar ascent.

During the development of the ascent propulsion system, leakage and functional failures of the helium solenoid valves and the helium pressure regulators occurred, which required a redesign of each component; however, the most significant problem was related to the ascent engine. The original ascent engine injector experienced thrust chamber compatibility problems and several cases of combustion instability when subjected to bomb tests. The time required for fabrication of the injector was also high, which resulted in unacceptably long periods to obtain the hardware needed for testing redesigns. Because of these problems and a pressing schedule, a backup ascent engine injector program was initiated with another contractor. The original contractor made numerous modifications to the injector design and the fabrication procedures in an effort to meet the injector completion schedule. However, the alternate contractor already had an acceptable injector that passed all tests with no reservations before the original contractor's testing was completed. Consequently, the alternate contractor was selected to fabricate the injector and assemble the engine for all flight vehicles subsequent to the Apollo 5 lunar module.

The ascent propulsion system performance was satisfactory throughout the flight program. The development and performance of the ascent propulsion system is discussed in greater detail in reference 4-64.

4.6.6.3 Reaction control system.- The Apollo missions required that the lunar module maintain various attitudes with respect to its flight path and be able to maneuver in three axes. Separation from the command and service module, docking with the command and service module, and various translation maneuvers during the lunar-orbit rendezvous were required. In addition, X-axis longitudinal translation was required to provide propellant-settling thrust for the descent and ascent propulsion systems. To meet the objectives, the lunar module reaction control system had two independent bipropellant systems. Each system provided the vehicles with attitude control and X-axis translation when used independently. When used together, Z- and Y-axis translation could be obtained. The two systems were identical in all respects other than engine locations and thrust vectors.

Each engine was a pulse-modulated, radiation-cooled, 100-pound thruster nearly identical to those used on the service module. Major engine components included inlet filters, two solenoid-operated propellant injection valves, an injector, and a nozzle skirt. The propellant and pressurizing gas storage components were grouped for the purpose of simplifying the checkout and repair procedures. The system was installed in two bay areas and on four outrigger booms. The tankage modules (helium, nitrogen tetroxide, and Aerozine-50) were installed on the left- and right-hand sides of the lunar module directly above the ascent propulsion system tanks. The engines were installed in clusters of four on the outriggers which were located around the periphery of the ascent stage at 45° to the orthogonal (pitch and roll) axes. Two of the four engines in each cluster were fed from each propellant supply.

In addition to the two separate systems, redundancy also extended to components within each system such as regulators, check valves, and explosive pressurization valves. Command and service module components that had already been developed were used wherever possible. Whenever such a component could not be used directly but could be made usable on the lunar module with minor modification, a common-technology approach was followed. The manufacturer of the command and service module part was given the task of modifying his product to make it usable on the lunar module. Significant cost savings and increased reliability resulted.

The environmental constraints for the lunar module reaction control system generally were less severe than those of the service module reaction control system; therefore, the experience gained with the service module components in the areas of vibration, shock, thermal vacuum, propellant compatibility, and susceptibility to contamination could be applied directly to the lunar module design. Two specific areas in which environmental conditions differed significantly were the vibration and the cold soaking of the four lunar module engine clusters. Also, because the lunar module propellant tanks and the helium tank were larger than those of the service module, the vibration test experience with the service module tanks could not be applied directly to the lunar module hardware. In these instances, the components were subjected to environmental testing dictated specifically by the lunar module environments.

The development and certification of the lunar module reaction control system consisted of nine major ground test programs. A brief discussion of several of the test programs follows.

The pre-production system development test was the first test in which the proposed configuration of the lunar module reaction control system was hot fired. The primary and secondary objectives, respectively, were to investigate the dynamic characteristics of the propellant-feed system and to evaluate propellant manifold priming procedures and engine performance during multi-engine firings. The test disclosed higher-than-predicted feed pressure fluctuations during the short-pulse high-frequency firings. As a result, a complete reevaluation of the control system requirements helped to define the interface between the guidance system and the reaction control system. The net effect was changing the maximum pulse frequency from 25 to 7 pulses per second. The test also resulted in modification of the planned flight-activation procedure to eliminate high transient pressures during priming of the propellant manifolds. Priming would be accomplished at tank pad pressures versus nominal operating tank pressures.

The production system development program objective was to determine if the system could meet fundamental design requirements. As such, the test configuration was almost identical to that of the reaction control system on the Apollo 5 lunar module. The test program demonstrated the capability of the system design to meet fundamental requirements. However, salient characteristics of some components were disclosed which altered the planned system operational mode. An outstanding example was the discovery that high flow rates or pressure surges would cause the propellant latching valves to unlatch and shift position. This valve problem was resolved for flight by requiring the crew to ascertain correct valve positions during critical mission phases.

Other component problems discovered were (1) transducer diaphragm incompatibility with propellant combustion residuals and (2) an inadequate seal design in the ground half of the propellant-servicing quick-disconnect coupling. The contamination control requirements (particle size, sampling procedures, etc.) and the cleaning procedures (flushing sequence, etc.) used for the production system were not adequate to preclude numerous failures of components because of particulate contamination. The test program provided valuable experience in helium and propellant servicing that was used in the design of ground support equipment at the launch site.

The third system-level test program, a design verification test program, was broader in scope than the production system development program. Not only was acceptable operation of the system demonstrated, but other factors such as manufacturing and checkout procedures, contamination control techniques, and propellant decontamination procedures used on flight systems were verified.

The structural integrity of the engine cluster and vehicle mounting hardware was verified during the production cluster environmental test program. The cluster design withstood all the mission-level random and sinusoidal vibration loads to which it was subjected, with the exception of the failure of a chamber pressure transducer bracket. This failure resulted in a redesign of the bracket assembly, which was retrofitted on the first flight lunar module.

The lunar module production cluster firing test program objectives were (1) to evaluate flightworthy lunar module engine cluster performance under simulated altitude conditions and (2) to determine the heat-transfer characteristics of the cluster during steady-state and pulse-mode duty cycles. The firing program consisted of single and multiengine firings that simulated selected portions of expected mission duty cycles. During the low-temperature mission duty cycle part of the program, the combustion chamber of an upfiring engine was destroyed by an explosion due to an accumulation of nitrate compounds. Contributing factors were found to be the upfiring attitude of the engine, low engine temperatures, helium saturation of the propellants, short-pulse firings, and relatively high test-cell ambient pressures. For lunar module application, engine failure was determined to be unlikely when the flange temperature was maintained above 120° F. Heater integration tests were performed following this requalification program. The tests demonstrated that, for certain combinations of short pulses, the engine flange cooled faster than the heaters could warm it. The net result of the tests was establishment of a safe engine operating regime that satisfied mission requirements.

Evaluation of the interconnect propellant feed mode was accomplished during the integrated reaction control system/ascent propulsion system PA-1 test program. The test program and analysis demonstrated that neither the reaction control system nor the ascent propulsion system experienced any detrimental effects during the interconnect feed operation. The test program did, however, indicate a potential problem with a pressure rise of trapped propellants in the inlet manifolds. This rise resulted from thermal soakback of a hot engine. Consequently, the Apollo malfunction procedures incorporated a pressure relief procedure.

An in-house lunar module reaction control system test program was conducted at the Manned Spacecraft Center (1) to define the general operational characteristics of the lunar module reaction control system under simulated altitude conditions and (2) to obtain performance data on individual subsystem components. Anomalies that were observed, investigated, and resolved included propellant latch valve leakages, pressure switch failures, and injector cooling below 120° F. The propellant latch valve leakage was caused by particulate contamination; system cleanliness was emphasized. The pressure switch failures could be of two types - failed closed and failed open. Contamination of the switch mechanism by semiliquid combustion products was the cause of a failed open switch. The design deficiency was corrected for flight hardware. The injector cooling problem was traced to the engine duty cycle.

The first lunar module flight, Apollo 5, was conducted to verify the lunar module ascent and descent propulsion systems and the abort staging function for manned flight. Because of problems with the guidance system, the reaction control system operated in several off-limit conditions and resulted in failures in the system. Within 3.1 minutes, the system A propellant was depleted to 27 percent, and that system was isolated to conserve propellant. System B continued at a rapid duty cycle until propellant depletion 5 minutes later, at which time helium started leaking through the collapsed system B fuel bladder. Satisfactory vehicle rates were

restored by the system B thrust reduction (resulting from propellant depletion) and by the isolation of system A propellant tanks. While system B was operating with two-phase oxidizer and helium-ingested fuel, the quad 4 upfiring engine failed. When system A was reactivated, the system A main shutoff valve on the oxidizer side inadvertently closed. The ascent propellant interconnect valves were later opened, returning operation of the engines to normal until the interconnect valves were closed. The depletion of all propellant during the last minutes of the second ascent engine firing allowed the spacecraft to tumble. Each of these specific reaction control system anomalies (i.e., the bladder, the engine, and the oxidizer main shutoff valve failures) was duplicated when a ground test system was exposed to similar duty-cycle and environmental conditions after the flight.

Also during the Apollo 5 lunar module flight, the upper limit of 190° F on the engine cluster was exceeded on numerous occasions with no deleterious effects; the Apollo 9 lunar module also exhibited this phenomenon. As a result, additional vendor tests were conducted to define a maximum temperature to which the engine valves could be subjected without degradation of performance. The tests were terminated at 375° F when no degradation in performance was experienced. An instrumentation change (increasing the upper limit to 260° F) was made to accommodate the expected operating temperature of the clusters.

Extremely good reliability of the lunar module and service module reaction control system engine injector valves was demonstrated on flights through Apollo 14. No engine injector valve leakage due to engine operation or malfunction was observed. A 25-pound weight saving was accomplished by the deletion of the valves from the system for all later flights.

During system pressurization on the Apollo 16 lunar module, system A regulator outlet pressure continued to rise after reaching nominal lockup pressure. The leakage persisted throughout the mission after pressurization. When the regulator output pressure reached 209 pounds per square inch, the system A interconnect valves were opened to transfer propellant to the ascent propulsion system. To permit mission continuation, this operation was repeated twice until sufficient blowdown capability existed. The pressure in system A eventually increased to 237 pounds per square inch, at which point the relief valve operated. Subsequently, periodic pressure relief occurred. Postflight analysis and tests showed that the most likely cause of the malfunction was contamination caused by a set of unique events; specifically, numerous replacements of components involving brazing downstream of the regulator, and subsequently subjecting the regulator to reverse flow conditions.

The design, development, and performance of the lunar module reaction control system are discussed further in reference 4-65.

### 4.6.7 Guidance, Navigation, and Control System

The lunar module guidance, navigation, and control system performed the necessary descent and ascent navigation, generated guidance commands in the form of thrust-level and attitude commands, and controlled vehicle attitude.

Navigation for descent to the lunar surface was the continuous process of estimating and updating the vehicle's position and velocity components in the reference coordinate system (determining the state vector) at given times using landing radar and accelerometer data. The lunar landing guidance equations calculated thrust-level and attitude commands based upon the updated state vector. The thrust-level and attitude commands were then executed by the control system.

The ascent maneuver required that the guidance, navigation, and control system be initialized with the orbit insertion parameters necessary for rendezvous with the command and service module. The ascent engine had no thrust direction control capability and could not be throttled. Therefore, the guidance system controlled the thrust vector by generating attitude commands to control the direction of the vehicle by use of the reaction control system. When the insertion velocity was achieved, engine thrust was terminated.

The guidance, navigation, and control system originally consisted of a guidance and navigation system and a stabilization and control system (ref. 4-66). The stabilization and control system contained an abort guidance system which was to be used if the primary guidance and navigation system failed. Late in 1964, a design review of guidance and control requirements resulted in the integration of the guidance, navigation, and control functions. At the same time, the capabilities of the abort guidance system were expanded and a general-purpose computer was added to the system.

Figure 4-21 is a functional diagram of both the primary guidance and navigation system and the abort guidance system, and the interfaces of each with the control electronics system. The primary system was essentially the same as that in the command and service module. The significant differences between the two systems were:

a. The lunar module optical system included a periscope-type telescope with a 60-degree field of view between mechanical stops. Six detents allowed a full 360-degree viewing capability.

b. The lunar module primary system included computer programs required for the descent and ascent phases and the control laws used in the digital autopilot.

c. The landing radar and rendezvous radar were part of the lunar module primary system.

The abort guidance system assumed control of the lunar module if the primary system failed at any time in the mission. This system could guide the lunar module to a safe lunar orbit and execute rendezvous commands. The abort guidance system consisted of an abort sensor, abort electronics, and a data entry and display assembly.

The abort sensor assembly was rigidly mounted to the vehicle and contained three rate integrating gyros and three pendulous accelerometers. These inertial sensing units provided attitude and velocity data to the abort electronics assembly which was a general-purpose computer. Operating on the attitude and velocity data from the inertial sensors, the computer generated guidance commands and engine on-off commands that were sent to the control electronics system. The abort guidance system was initialized with, and periodically realigned to, the primary guidance system.

The control electronics system consisted of the attitude and translation control assembly; the descent engine control assembly; descent engine gimbal drive actuators; rate gyro assemblies; rotation, translation, and throttle hand controls; flight director attitude indicators; and various other control assemblies. The control electronics provided the interface which drove the propulsive devices; that is, the 16 attitude control thrusters, the gimbaled and throttleable descent engine, and the ascent engine.

The development and testing of the primary guidance and navigation system was essentially the same as that discussed in section 4.4.8. The only differences were the interfaces with the landing radar and rendezvous radar and the autopilot interface with the engine. The types of testing performed during the control electronics development program were design feasibility, design verification, and qualification. The significant problems encountered are listed in table 4-VI. The types of testing performed during the abort guidance system test program were design feasibility design verification, and design proof to qualification limits. A full mission engineering simulation was performed to verify the compatibility between the hardware and computer software. The significant problems encountered are summarized in table 4-VII. A detailed discussion of the development and testing of the abort guidance system is given in reference 4-67.

Performance of the primary and abort guidance systems throughout the Apollo flights was excellent. No failures required the use of a backup system in any of the manned flights. During the unmanned Apollo 5 mission, the first scheduled maneuver was terminated early and the subsequent maneuvers had to be performed by using the backup control electronics system. The actual thrust buildup profile was different from the profile stored in the computer. The computer detected a difference in thrust levels and automatically shut the engine down.

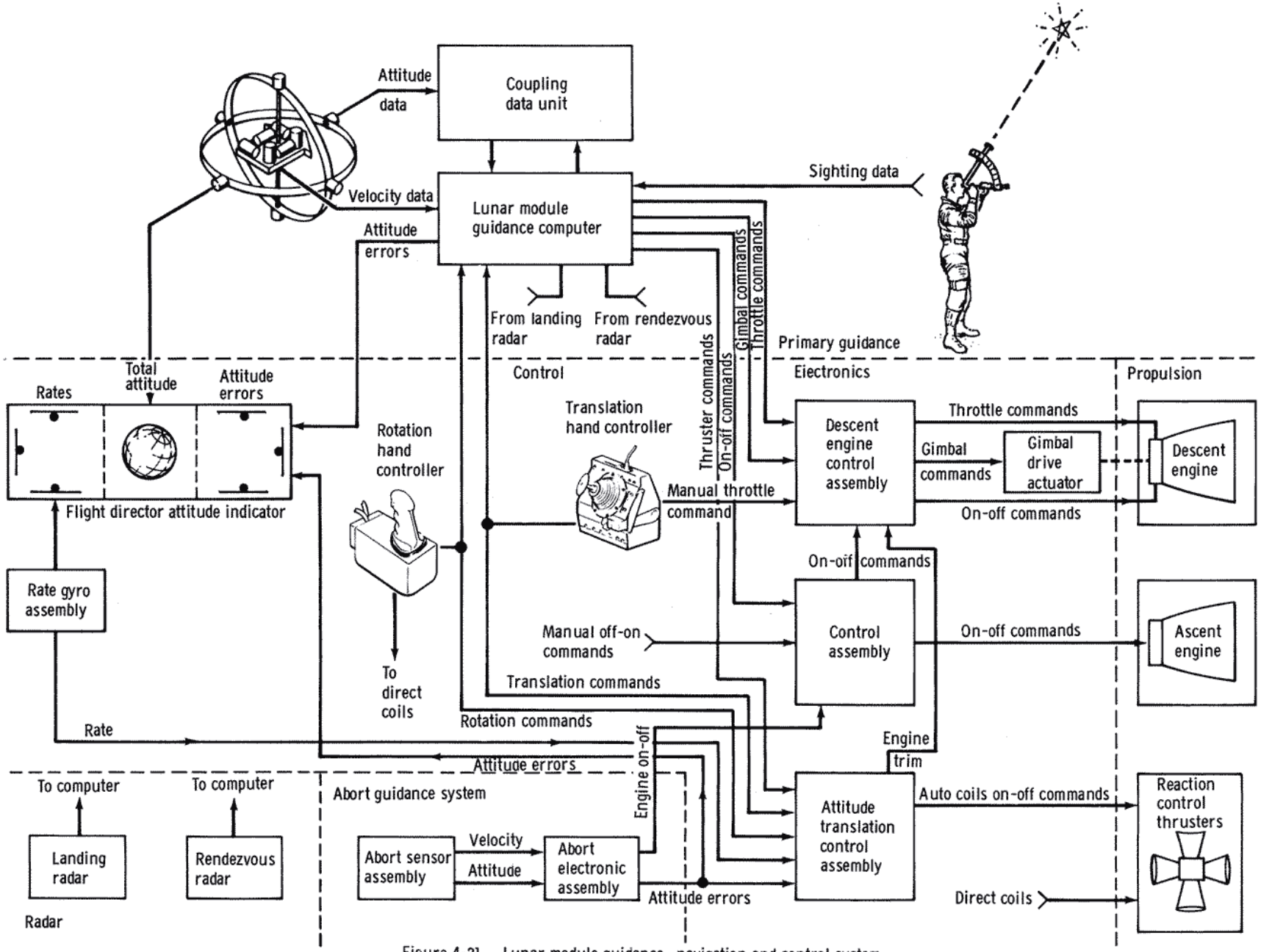


Figure 4-21. - Lunar module guidance, navigation and control system.

TABLE 4-VI.- CONTROL ELECTRONICS DEVELOPMENT PROBLEMS

| Equipment | Problem | Corrective action |
|---|---|---|
| Attitude and translation control assembly | Solder cracks were caused by expanding urethane filler. | The joint was made stronger by making it a reflowed convex solder joint. |
| Thrust/translation controller assembly and attitude controller assembly | Switch adjustment changed. | The switch adjustment procedures were revised. |
| Gimbal drive actuator | Brake failed to engage and the actuator would coast. | The motor was redesigned to include contact drag principle. |

TABLE 4-VII.- ABORT GUIDANCE SYSTEM DEVELOPMENT PROBLEMS

| Equipment | Problem | Corrective action |
|---|---|---|
| Abort sensor assembly | Single-point temperature sensor for thermal control. | Nine redesigns of beryllium block. |
| Abort sensor assembly mounting feet | Fatigue and vibration failures. | Two redesigns of mounting feet. |
| Gyro | Asymmetrical scale factor | Redesign of pulse torque loop. |
| Abort electronics assembly | Excessively rapid fall time of read and write pulse. | Redesign for slower fall time. |
| Abort electronics assembly | Penetration of matrix board split pin wire wrap. | Change of manufacturing procedures. |
| Abort electronics assembly | Solder reacted with gold in component leads causing solder to become brittle and crack. | Component leads were pretinned to prevent solder from coming into contact with gold. |
| Data entry display assembly | Cracks and bonding separation of electroluminescent segments. | Better screening procedures. |
| Data entry display assembly | Pushbutton was binding. | Incorporation of test and screening procedures. |

The most significant failure in the primary guidance system was the occurrence of five computer alarms during the Apollo 11 lunar module descent. The alarms indicated to the crew that the computer program was being called upon to perform too many tasks and that some tasks would not be executed. The problem was avoided on subsequent flights by not requiring the computer to process rendezvous radar data, which is not needed during descent. The computer workload was thus relieved, and no further alarms of this type were experienced.

The most significant failure in the abort guidance system occurred on Apollo 14. A failure of the 4-volt power supply in the abort electronics assembly caused the system to switch to the standby mode, making it unusable. Fortunately, the failure occurred after rendezvous was complete and the system was no longer needed. The cause of the failure could not be determined because the lunar module hardware could not be returned to earth.

The most significant failure in the control electronics system occurred during the unmanned Apollo 5 mission. Excessive thruster activity occurred during the ullage maneuver prior to the last ascent engine maneuver. The cause of the problem was a control system instability for the light ascent stage configuration and was corrected by a minor design change in the pulse-ratio-modulator electronics.*

The performance of the guidance and navigation systems was evaluated by studying the descent and ascent trajectories. A set of velocity curves was generated using data from the primary guidance system, the abort guidance system, and radar tracking. System performance was evaluated by comparing the velocity curves. Each gyro and accelerometer could be the source of small but unique errors in the velocity data. The alignment accuracy of the platform was also a source of error. By methodically varying the error sources, the velocity curves could be made to fit each other. The error sources were varied until the best curve fit was obtained, and that set of error sources was considered to be the most probable. For the descent analysis, time-of-ignition and time-of-touchdown were accurately known and, of course, the velocity relative to the lunar surface approached zero at touchdown. Velocity relative to the surface at ignition was not so well known and contributed to velocity error. The ascent analysis is much the same except that final velocity was not zero.

A summary of the significant error sources for the first five lunar landing missions is presented in table 4-VIII. The only significant error sources observed in the primary guidance system were accelerometer biases and platform alignment. (The accelerometers were mounted on the stable platform.) Both error sources caused errors that were less than that expected. In preparation for ascent, the platform alignment technique used one star and the gravity vector. Consequently, the expected error was different for each axis as shown. If the gravity vector was not vertical because of local gravity excursions, the alignment accuracy was affected. Gravity variations at the Apollo 15 landing site caused a misalignment of about 2 arc minutes, the largest alignment error of any Apollo mission. If the Apollo 15 misalignment were not included, the average and standard deviation values for ascent in table 4-VIII would be half as large. Analysis of data from the abort guidance system precludes isolation to a single error source. Errors along the spacecraft thrust axis (X-axis) may be caused by accelerometer bias or scale factor errors, whereas errors perpendicular to the thrust axis may be caused by accelerometer bias or misalignment errors. Table 4-VIII also summarizes abort guidance system performance during the lunar landing missions. Actual and expected uncertainties are almost the same.

### 4.6.8 Environmental Control

The lunar module environmental control system was made up of four main subsystems which performed the following functions: atmosphere revitalization, oxygen supply and cabin pressure control, water management, and heat transport. System performance is discussed, including consumables usage, cabin leakage, and changes as a result of experience.

The modular concept was necessary because of the weight and volume constraints, but use of this concept led to a number of problems. When equipment was modified or changed, the certification testing program was modified accordingly. Requalification tests, which caused the same basic package to be subjected to a number of different qualification tests, were required in many instances to qualify the revised equipment. The interdependence of packaging and functional efforts was demonstrated by tests, but a great number of tests and a considerable amount of time were required.

*This problem was not related to the excessive thruster activity that occurred when the primary guidance system was selected subsequent to the first ascent engine firing.

TABLE 4-VIII.- SYSTEM PERFORMANCE DURING DESCENT AND ASCENT

| Source | Expected error | Average error | Standard deviation |
|---|---|---|---|
| Primary Guidance | | | |
| Descent: | | | |
| Accelerometer bias, μg | 200 | -6.5 | 32.7 |
| Misalignment, arc sec | 210 | -20 | 107 |
| Ascent: | | | |
| Accelerometer bias, μg | 500 | 10.8 | 119.1 |
| [a]Misalignment, arc sec | X = 148<br>Y = 57<br>Z = 88 | -52 | 104 |
| Abort Guidance | | | |
| Descent: | | | |
| X (scale factor + bias), μg | 40 | -68 | 43 |
| Y (misalignment + bias), μg | 70 | -24 | 87 |
| Z (misalignment + bias), μg | 70 | -80 | 97 |
| Ascent: | | | |
| X (scale factor + bias), μg | 50 | -102 | 70 |
| Y (misalignment + bias), μg | 70 | -31 | 80 |
| Z (misalignment + bias), μg | 70 | -32 | 69 |

[a]The star plus gravity alignment technique results in a different expected error for each axis.

The environmental control system design concept of modularized subassemblies led to an early decision to perform certification testing at the module level for examining and verifying all possible component interactions during dynamic testing. Because of a stipulation that any field failure of a single component would require replacement of the complete module or lowest replaceable element, it was reasonable to assume that certification should be performed at the same vehicle replacement level of assembly. Component-level tests were primarily used to verify design and to establish performance curves, and subsystem-level tests were performed to identify component interaction and to verify that system design performance requirements were met.

Two sets of flight hardware were subjected to qualification testing. One set of hardware was tested to design-limit certification levels consisting of mission-design extreme environments, and one set was subjected to two normal mission level environment tests plus ground-based environment tests. Design changes resulting from component failures during initial certification testing, plus component additions and redesign imposed by changes in system requirements, were responsible for incorporating a delta qualification program following the initial logic-group qualification program.

To certify the life support section of the environmental control system, a complete test facility was built at the prime contractor's site. The man-rating test facility consisted of a vacuum chamber, a vacuum system, a data system and a life support section of the environmental control system, which was installed in the simulated lunar module cabin of the vacuum chamber. Using the simulator, the environmental control system manrating was accomplished in two steps. The first step (Phase I) used some pre-production hardware that differed from production hardware only in physical layout. The second step (Phase II) used production hardware that was modified to provide instrumentation points necessary for gathering parametric data.

To ensure compatibility between all subsystems during vehicle exposure to expected environments, the LTA-8 vehicle was installed in a special thermal-vacuum chamber in which six manned tests were conducted at design-extreme metabolic and thermal loads to verify flightworthiness. The significant hardware problems encountered during development and testing are discussed in detail in reference 4-68.

Some flight problems were encountered in the environmental control system, although none endangered the crewmen. One of the more annoying problems was the noise produced by the suit circuit flow, the glycol pumps, and the cabin fans. A muffler was added to the outlet of the glycol pumps to reduce the noise to an acceptable level.

Erratic carbon dioxide sensor readings on the lunar modules for the Apollo 10, 11, and 12 missions and crew reports of water entering the pressure garment assemblies prompted two revisions to the suit circuit assembly. A sense line from the water separator drain tank was rerouted from a point upstream to a point downstream of the carbon dioxide sensor and crew oxygen umbilicals. Also, a restrictor was added to the lithium hydroxide cartridges to limit the flow in the suit circuit and thus reduce the speed of the gas-driven water separators, which did not remove water effectively at high speeds. These changes were incorporated for Apollo 13.

The Apollo 11 crew, the first to sleep in the lunar module, found that sleeping on the floor was uncomfortable and cold. Consequently, hammocks were provided on all subsequent vehicles.

Internal leakage through an oxygen shutoff valve from the oxygen control module into one of the ascent stage oxygen tanks was experienced on Apollo 13. The problem was identified as a damaged O-ring, and new checkout procedures and hand-selected O-rings were incorporated. A similar O-ring problem occurred later in the Apollo program during bench checkout of the water control module valves. Again, hand selecting the O-rings and new installation procedures solved the problem which seems to be inherent in the multivalve manifold design.

Although no free water was reported in the suit circuit, the water separator speed remained high on Apollo 14. Consequently, a procedural change was instituted on the Apollo 15 vehicle and subsequent vehicles to increase the system pressure drop and thereby decrease the flow. This change was accomplished by reconfiguring the suit circuit assembly valves when the crew was suited without helmets and gloves. However, another problem was encountered in the ground checkout before the Apollo 15 mission. The requirement for unsuited rest periods resulted in low suit circuit differential pressure (high water separator speeds and whistling noises) when the hoses

were disconnected from the suits. Therefore, stowage brackets with orifices simulating pressure garment assembly pressure drops were designed for the oxygen umbilicals. A pressure garment assembly dryout procedure was also developed to remove perspiration from the suits after use.

Most redundant components included in the environmental control system were used for various reasons at some time during the Apollo flights. However, the redundant coolant loop and redundant water regulators were never needed because the primary systems performed satisfactorily.

### 4.6.9 Displays and Controls

The displays and controls were the interface between the crewmen and the lunar module. Controls were provided for manual operation of all systems, for making adjustments, and for selection of alternate operating modes. To permit easy observation or control, practically all displays and controls were located within reach on display panels. There were 160 circuit breakers, 144 toggle switches, 16 rotary switches, and other control equipment. Digital voltmeters, servometers, and two- and three-position flags displayed information such as time, altitude, range, pressure, and temperature.

About halfway through the Apollo program, after several broken or actuated circuit breakers had been found, films made of crew activities within the spacecraft showed that these conditions were often caused by crewmen inadvertently bumping the circuit breakers. Consequently, the bumper guards were modified to better protect the breakers and wicket-type guards were installed over critical switches. Other inadequacies encountered during the development program included failure of electronic parts, improper sizing of mechanical parts, breaking of glass, failure of solder joints, and failures due to contamination. Several failures also occurred during flight; however, the systems were so designed that the failures did not present a dangerous situation.

Two items that were not adequately developed were the circuit breakers and the digital timers. Hermetically sealed circuit breakers were specified; however, the manufacturer was unable to qualify this type of breaker because of assembly problems. One of the assembly problems involved the process of fitting the major circuit breaker assembly (containing a pushbutton, bridge contacts, and a bimetallic element) into a hermetically sealed can. Because the can case contained the contacts that mated with the inner bridge contacts, a specific contact pressure was difficult to obtain when the two parts were assembled and sealed with solder. Failures resulting from the lower contact pressure included contact chatter, high contact resistance in dry circuit testing, and high voltage drop. Development was discontinued and the qualified command-module-type breakers (not hermetically sealed) were used. The original digital timers of modular "cordwood" construction, had numerous problems. In this type of construction, electrical components (resistors, capacitors, diodes, etc.) were soldered between two printed circuit boards and the void between the boards was filled with a potting compound. The differential expansion between the potting compound and the circuit boards caused the solder joints to crack and thus break electrical contact. Rework of units could not correct the problem. The units were also susceptible to electrical noise. Eventually, a complete redesign and repackaging by a new manufacturer was required.

The altitude/range/range-rate meter glass face was discovered to be broken during the Apollo 15 flight. Newly developed information on stress corrosion was applied in a review of glass strength and stress. Spacecraft meters with similar glass applications had shields and doublers installed for subsequent flights.

A more detailed discussion of the lunar module displays and controls is given in reference 4-69.

### 4.6.10 Communications System

The lunar module communications system provided the voice link between the lunar module and the earth; between the lunar module and the command module; and, by means of a relay function, between the earth and the crewmen on the lunar surface. The system also provided the capabilities for:

a. Ranging between the earth and the lunar module

b. Ranging between the command module and the lunar module

c. Transmitting instrumentation data to the earth

d. Transmitting television to the earth

e. Voice intercommunication between crewmen

f. Up-linking digital commands from the earth

The communications system was composed of VHF and S-band equipment. The VHF portion was selected for short ranges (between the lunar module and the command module, and relay between the lunar module and extravehicular crewmen); and the S-band portion was selected for deep-space communications.

During the early phases of the program, the method of providing voice, data, and ranging functions went through several iterations as a result of changes in mission requirements. For instance, the VHF system first included one receiver and one transmitter, then two receivers and three transmitters, and finally two receivers and two transmitters. Both transmitter/receiver pairs (transceivers) were combined into a single unit along with a diplexer assembly that allowed simultaneous use of a single antenna for two separate frequencies. The channel A transceiver operated on a frequency of 296.8 megahertz; channel B operated on 259.7 megahertz. The control panel configuration allowed the selection of any combination of transmitters or receivers to give simplex or duplex operation. A range tone transfer assembly was added to provide turnaround of ranging tones received from the command module. The antenna system for the VHF equipment consisted of two inflight antennas located on opposite sides of the spacecraft and a lunar surface antenna on a mast that was cranked up and down from inside the crew compartment.

The S-band system consisted of a transceiver containing two identical phase-locked receivers, two phase modulators with driver and multiplier, and one frequency modulator. The S-band operating frequencies were 2282.5 megahertz for transmission and 2101.8 megahertz for reception. The nominal power output was 0.75 watt in a low-power mode. In the high-power mode, the output of the transceiver was increased to 18.6 watts. The original concept for power amplification was to use a traveling wave tube. However, because of weight and power limitations, an amplitron-type tube was incorporated into the design. During early development, unstable operating characteristics and very limited life were experienced with the amplitron tubes.

Three types of S-band antennas were used. A steerable antenna with a 26-inch-diameter parabolic dish automatically tracked the incoming signal to maintain an antenna position that pointed the dish centerline toward the earth. The antenna, operated either manually or automatically, provided a coverage of 174° in azimuth and 330° in elevation. It was used for transmission and reception while the lunar module was in lunar orbit, during descent, after landing, and during ascent from the lunar surface. The second type was an omnidirectional antenna. Two were used (one on the front and one on the rear of the ascent stage) to provide the required coverage. These antennas were used before activation of the steerable antenna and as its backup in case of a failure. The third type of S-band antenna was erectable and consisted of a 10-foot-diameter gold mesh parabolic reflector, an aiming device, and a tripod. The antenna, folded and carried in the descent stage, was erected by the crewmen on the lunar surface and used for television transmission. For Apollo 15, 16, and 17, the lunar communications relay unit (sec. 4.9) mounted on the lunar roving vehicle was available for lunar surface television, and the erectable antenna was not needed.

The remainder of the system consisted of a signal processor assembly, a digital up-link assembly, and a pulse-code-modulation and timing electronics assembly. The signal processor assembly provided signal modulation, mixing, mode switching, keying, and relay. An audio center for each crewman provided individual selection, isolation, and amplification of audio signals received and transmitted by the communications system. Also included was the capability for intercommunications between crewmen. The digital up-link assembly received an up-link 70-kilohertz subcarrier from the S-band transceiver, demodulated and decoded the up-link commands on this subcarrier and applied these commands to the lunar module guidance computer. It also provided capability for backup up-link voice on the same subcarrier. The pulse-code-modulation and timing electronics assembly received instrumentation information from throughout the spacecraft and processed this into a data bit stream which was placed on a subcarrier in the signal processor assembly and transmitted to earth by the S-band equipment.

One of the major design changes in the lunar module communications system, which affected three different units, resulted from an unpredictable condition in the aft equipment bay. It was originally assumed that the equipment bay, where the communications system units were mounted, would be at a vacuum when in space. Because of the slow vent rate of the thermal blankets and unavoidable cabin leakage, however, this area maintained a small pressure that caused a corona condition inside the units. This condition is an electrical arcing caused by ionization of the partial air pressure around high-voltage components. The corona resulted in degradation (and, sometimes, complete loss) of transmitted signals. This condition existed to various degrees in the S-band transceiver, the S-band power amplifier, and the VHF transceiver. Several modifications were attempted, including increased insulation and the use of various types of potting materials. The use of Teflon baffles between high-voltage parts inside the transmitter was successful in the VHF portion of the system, but the only solution that proved effective on the S-band transceiver and power amplifier was to put them in a sealed pressurized case.

Developmental problems that were discovered during the extensive testing program included cracked solder joints in the steerable antenna; extensive wire breakage in the signal processor assembly cable; relay reliability problems in the VHF transceiver; integrated circuit and transistor contamination problems in the digital up-link assembly, the VHF transceiver, and the steerable antenna; and structural vibration failures in the signal processor assembly and steerable antenna.

Flight performance of the communications system was very good. Various improper switch configurations caused the VHF voice link between the lunar module and command module to be interrupted temporarily during the Apollo 10, 12, and 15 missions. As soon as the improper switch configuration was identified, the voice link was restored.

Because the VHF ranging requirement was added to the system late in the development program, certain limitations were imposed on the system to keep design modifications to a minimum. One limitation, a time-sharing of voice and ranging tones, resulted in a certain amount of voice distortion during ranging operation. Also, it was necessary to preclude all conversation during ranging acquisition. Preflight briefings and laboratory demonstrations for each crew helped to prevent flight problems because of these limitations.

Two major problems were encountered in the flight performance of the steerable antenna. Several times during Apollo 14, the antenna dish experienced divergent oscillations. After a few seconds, the movement became too great for the antenna to remain locked on the up-link signal. Communications were then lost and the reacquisition procedure was required. Data from the Apollo 10, 11, 12, and 15 missions showed that a similar condition had existed, but to a much lesser degree. Many possible causes were investigated, including vehicle blockage of the signal, multipath reflections from the lunar surface, transmission of unwanted signals from the earth, and interference from other systems on the spacecraft. No conclusion was reached about the exact cause of the problem. With the exception of these auto-track losses, the tracking performance was excellent during all vehicle maneuvers. The second steerable antenna problem was experienced on Apollo 16. The mechanical drive mechanism was designed to be held in place with a locking pin that was electrically released during antenna activation. The locking pin did not release in the yaw axis and the antenna could not be used to track automatically.

Additional information on the design, development, and performance of the lunar module communications system is contained in references 4-55, 4-56, and 4-70 through 4-73.

### 4.6.11 Radar Systems

Two unique and independent radar systems provided guidance and navigation information to the guidance and control system during the lunar landing and rendezvous phases of the Apollo missions.

The landing radar system consisted of an antenna assembly and an electronic assembly which shared the processing of velocity sensor and altimeter data to measure lunar module velocity and range relative to the lunar surface. The Doppler principle was used for velocity determination; propagation time delay was used for slant range determination. To measure velocity, three beams of continuous microwave energy were transmitted to and reflected from the lunar surface. The

Doppler shifts along these beams were extracted by the velocity sensor. The slant range was obtained from a single beam of continuous microwave energy which was frequency-modulated by a linear sawtooth waveform. Comparison of the return signal with the transmitted modulation was made in the altimeter portion of the radar.

The rendezvous radar, located on the lunar module ascent stage, consisted of an antenna assembly and an electronics assembly. An active transponder was installed in the command and service module. The radar was a continuous-wave type, which operated in a beacon mode and acquired and tracked the transponder at ranges up to 400 miles. The radar provided precision range, range-rate, angle, and angle-rate data relative to the transponder. Range data were derived from the propagation delay of tones modulated on the transmitted carrier of the radar which was, in turn, received, filtered, remodulated, and retransmitted by the transponder and then received back at the radar. Range rate was determined from the two-way Doppler shift of the carrier frequency. Angle tracking of the transponder in azimuth and elevation was accomplished using an amplitude comparison technique.

The landing and rendezvous radar systems were the first all-solid-state radars to be designed for and flown in space. Sophisticated signal processing techniques were used in the rendezvous radar and transponder which minimized weight, size, and power requirements. (The radar and transponder met all the established performance requirements at the 400-mile range with only 300 milliwatts of radiated X-band power.) The unique requirements for environment, reliability, size, and weight led to the selection of "cordwood" construction (a multilayer circuit board design). However, this construction technique resulted in a number of development problems. Two significant problems were not identified until after production was initiated, and extensive replacement of electronic assemblies was required. These problems were (1) open circuits in interlayer columns of the rendezvous radar multilayer circuit boards at hot and cold temperature extremes and (2) cracked solder joints in the landing radar as a result of stress exerted on solder joints during thermal cycling.

Operational evaluation tests simulating lunar mission phases were performed to fully evaluate performance of the radars before the first lunar mission. These tests are discussed briefly in the following paragraphs.

Rendezvous radar flight testing was conducted to verify the capability of the radar to meet Apollo mission performance requirements. The objective of the tests was to verify that the tracking, ranging, and velocity loops of the rendezvous radar operated properly during a simulated lunar stay. A jet aircraft and a helicopter were used to fly the radar transponder, testing it against an instrumented ground-based lunar module radar at the White Sands Missile Range. The tests simulated several orientations along each of the probable lunar module rendezvous and lunar-orbit trajectories and demonstrated that the rendezvous radar performed within the required accuracy range at distances representative of the design range. The performance of the rendezvous radar/transponder link was evaluated at the maximum range during the Apollo 7 mission. The test conditions simulated the lunar stay phase of a lunar mission by acquiring and tracking the orbiting command and service module transponder with a ground-based radar to verify that the tracking, ranging, and velocity loops of the rendezvous radar and the tracking loops of the transponder functioned properly at the extreme limits of their capabilities. The rendezvous radar was activated for the first time in the space environment during the Apollo 9 mission. The accuracy of the rendezvous radar and the techniques for using it were verified by performing an active command module/lunar module rendezvous in earth orbit.

Landing radar flight testing was also conducted. The objectives of this testing were to (1) evaluate the performance of the landing radar under dynamic flight conditions, (2) verify the landing radar mathematical model, (3) evaluate the combined performance of the landing radar and the lunar module guidance computer, (4) verify the adequacy of the landing radar to meet mission requirements, and (5) define the constraints or necessary design changes. The tests were conducted (within the capabilities of the test aircraft) under flight conditions that simulated each of the probable lunar-descent trajectories.

Radio-frequency view factor testing was performed on the ground on a lunar module mockup to determine if any false lock-on effects would be caused by Doppler returns from lunar module structural vibrations during descent engine firings. The areas investigated were the lunar module legs, engine skirt, and bottom structure. The test results indicated that some degradation of landing radar performance had occurred. For this reason, the following changes were made to correct the problem.

a. The frequency response of the preamplifier was changed to decrease the landing radar sensitivity to low-frequency vibrations exhibited by the lunar module structure.

b. The antenna was rotated to prevent the landing radar beam from impinging on the lunar module leg structure.

c. A baffle was installed to shield the radar beams from descent engine bell reflections.

To test the lunar module landing radar in a space environment with the descent engine firing, special instrumentation was installed on the Apollo 9 lunar module to measure the signals in the velocity and altimeter preamplifier outputs. Following ignition of the descent engine, spurious signals appeared which were attributed to flaking of the Mylar thermal blanket. The problem was corrected by replacing the Mylar thermal blanket with an ablative paint on a portion of the descent stage.

Mission performance for the lunar module rendezvous and landing radar systems was satisfactory on all lunar Apollo missions. Velocity and range data were provided by the landing radar from the point of lock-on to touchdown. The rendezvous radar acquired the service module transponder at an average range of 130 miles.

Additional information on the development, testing, and flight performance of the landing and rendezvous radar systems is contained in reference 4-74.

### 4.6.12 Instrumentation System

The lunar module instrumentation system provided the measurements necessary to ascertain whether the vehicle systems were operating properly. These measurements consisted of pressure, temperature, voltage, quantity, and discrete (switch closure) measurements that were displayed to the crew on meters and transmitted to the ground over the communications link. The instrumentation system also provided onboard voice recording and caution and warning monitoring of parameters critical for crew safety. The equipment required to accomplish these functions included transducers (sensors), a signal conditioning electronics assembly, the pulse code modulation and timing electronics assembly mentioned in section 4.6.10, a data storage electronics assembly (voice recorder), and a caution and warning electronics assembly.

In developing the hardware, a primary requirement was not to interfere with the system being monitored. This requirement did not have much effect on measurement of physical parameters (such as pressure, temperature, and quantity) because a sealed probe compatible with the monitored substance was generally available. However, monitoring electrical parameters presented a problem. A failure in the measuring circuit could cause the measured circuit to become completely inoperative or could activate a circuit that was not supposed to be operating. To prevent these problems, large resistors and transformers were used in the interface circuits so that no instrumentation system failure could cause an unwanted voltage or produce a short circuit in the measured circuit.

Various test programs were conducted to eradicate weak components. Temperature and vibration tests appeared to be the most effective. Expansion from temperature changes and flexing from vibration caused weak solder joints, thin insulation, and weak components to fail during these tests rather than later during lunar module operation. This technique was fairly successful, but failures still occurred on the vehicle. One interesting point was that all of these failures occurred before 2000 hours of operation, whereas several units accrued 6000 hours of operating time before flight and never experienced additional failures.

The early decision to require a high-accuracy system meant that the entire system had to be optimized. However, two highly accurate items that were already available were (1) the signal conditioners that amplified the small electrical signal from the transducers to a standard 0- to 5-volt dc level, and (2) the pulse code modulation devices that converted the 0- to 5-volt dc analog signal to an eight-bit word.

The caution and warning electronics assembly was designed so that critical measurements could be monitored automatically, releasing the crew for other tasks. Pressure, temperature, and quantity levels were determined by the other subsystems and, if the measurements exceeded

predetermined levels, the caution and warning electronics assembly initiated a master alarm tone and a light identifying the affected system. When these levels were established, the system eccentricities were not all known, and many erroneous nuisance alarms were generated during normal operations. For instance, an alarm might be generated when a system was turned on. Even though only a short time elapsed (less than a second) before the system reached a normal operating range, the caution and warning electronics assembly would immediately detect an out-of-tolerance system. Alarms also were generated when other systems momentarily exceeded safe limits during switching to different modes of operation. Most of these nuisance alarms were corrected by placing time delays in the caution and warning electronics assembly circuits, which allowed the systems to reach or return to their normal operating levels in a reasonable time. A few nuisance alarms could not be eliminated without a great deal of expense. These occurred during system activations.

Although a few measurement problems and nuisance master alarms were experienced, the overall instrumentation system met all requirements.

A more detailed technical discussion of the lunar module instrumentation system is given in reference 4-75.

## 4.7 ADDITIONAL SPACECRAFT DEVELOPMENT CONSIDERATIONS

### 4.7.1 Introduction

Aspects of spacecraft systems development and performance which could not be conveniently discussed within the context of a specific spacecraft module are included here.

### 4.7.2 Electrical Wiring System

The electrical wiring system included the interconnecting wiring between the various system components, the associated electrical connectors and termination devices, and the required electrical harness support and protective hardware such as harness clamps and tubing. These items were established as a system to (1) provide management control over the types of hardware selected and the processes and procedures to be used, (2) facilitate understanding and assistance in the resolution of problems, and (3) provide management control for initiating or assisting in the development of new hardware or technology whenever necessary.

The design requirements for the command module and lunar module wiring and connecting devices were essentially the same. The wiring insulation was selected to withstand test voltages up to 1500 volts dc; the conductors were selected to conduct rated currents at temperatures up to 500° F without significant degradation of insulation characteristics. Extruded Teflon insulation with a wall thickness of 15 mils was used for the Block I command module wiring to provide protection against abrasion and damage during the fabrication and installation of harnesses. This type of insulation had been used successfully on many aircraft. Because of the emphasis on weight reduction, the Teflon wiring insulation for the Block II vehicles was changed to a 7-mil wall thickness, and a 1/2-mil polyamide dispersion coat was added for additional abrasion protection. This change resulted in a weight saving of approximately 500 pounds. Approximately 110 000 feet of wiring weighing nearly 1350 pounds was used in the Block II command and service module. The smallest wire used was 24 gage, and most of the conductors were nickel-plated copper.

Approximately 75 000 feet of wire weighing nearly 750 pounds was used in the lunar module. The wiring was silver-plated copper except for some of the minimum-size wire (26 gage), which was copper-chromium-constantan. The thin-wall insulation (7 mils) consisted of a tape-wrap construction which was covered with a 1/2-mil dispersion coat of Teflon. The tape was made up of a layer of polyamide bonded to one or more layers of Teflon. One tape was wrapped around the conductor in one direction with a 50-percent overlap; a second tape was wrapped in the opposite direction, also with a 50-percent overlap. These layers were bonded together by a heat sintering process and then covered with the Teflon dispersion coat. The dispersion coat sealed the exposed edges of the tape and provided a chemically resistant barrier to the polyamide, which

degraded when exposed to lunar module engine fuels. This coating provided additional abrasion resistance and a smooth outer surface for better environmental sealing in the grommet wire seals of connectors.

The connecting devices used on both the command module and lunar module were similar with a few exceptions. Most of the round connectors were of the bayonnet locking type, and individual environmental interfacial seals were incorporated for each connector contact. A one-piece silicone rubber seal was used at the wire-entry end of the connector to prevent contaminants from entering the connector and causing short circuits between contacts or wiring. As an added precaution, a silicone potting material was used in the lunar module connectors for additional environmental sealing at the wire-entry end. Some hermetically sealed connectors were required at the cabin pressure bulkheads. Most of these were rectangular and had a glass seal around each pin to prevent leakage of cabin pressure through the connector.

Connecting devices other than the aforementioned connectors were also used for interconnecting wiring between system components. On the command module, these devices consisted of modular terminal boards and crimp-type wire splices. The modular terminal board was basically a small rectangular block incorporating eight socket contacts that could be bussed together in various combinations. A mating pin was crimped onto a wire, and the pin was then inserted into the appropriate socket. The modular terminal board also had one-piece silicone rubber grommets that provided an environmental seal for each wire, similar to the wire grommet seal used on the command module and lunar module connectors.

For maximum wiring reliability, an early command module ground rule prohibited the use of wire splices; however, approximately 250 crimp splices were eventually used. No significant problems were encountered.

The modular terminal board was not used on the lunar module; however, both the solder-type and crimp-type wire splices were used. The early developmental vehicles had more than 4000 splices, but this number was finally reduced to approximately 1500. Generally, the solder splice was used for bench operations and the crimp splice for rework or vehicle installations.

Wiring harnesses and connecting devices do not generally appear to be fragile or easily damaged; however, discrepancies often occurred during fabrication and installation. The number of discrepancies had to be reduced to zero during the last stages of checkout before launch of the spacecraft. To help eliminate these discrepancies, specific fabrication, processing, handling, installation, and checkout techniques were developed. Fabrication and processing techniques included daily calibration of splice-crimping tools, and the development of potting and environmental sealing techniques, three-dimensional harness tooling boards, special harness handling fixtures, and special protective enclosures for unmated connectors. Protection for harnesses after installation in a vehicle included the use of special tubing and wire routing trays, chafe guards at sharp corners, and adherence to specific criteria for harness support and clamping. For checkout of wire harnesses, procedures were developed to make automated electrical measurements, which included conductor continuity, conductor resistance, and insulation dielectric strength. These measurements were made on the tooling board and again after installation in the vehicle to verify the integrity of the wiring in every harness.

Several significant wiring problems occurred during the Apollo program. Radial cracking of the polyamide dispersion coating on the command module wire insulation was determined to have resulted from an incomplete curing of this coating. A chemical test was developed to ensure the adequacy of the cure, and a large amount of unsatisfactory wire had to be removed from stock and from several spacecraft to eliminate the problem.

As a result of the Apollo I fire, numerous changes were made in the kinds, amounts, and temperature limitations of materials that could be used in the spacecraft. A maximum allowable temperature limit of 400° F was established for wiring insulation. To ensure that this limitation was not exceeded, an evaluation was made of all system circuitry to determine the adequacy of the related circuit breakers under worst-case short-circuit conditions. As a result of this evaluation, a number of wire and circuit breaker sizes were changed to maintain wire/circuit breaker compatibility.

Two problems occurred with the lunar module wiring. First, because the vendor had changed the amount of carbon in the black-colored wire insulation, the resistance of the insulation was decreased from more than 100 megohms to as low as 5 megohms. Under certain conditions, this change could have affected instrumentation measurements or given a false caution and warning signal. Although a critical review of the circuits where this wiring was used determined that a failure would not affect crew safety or mission success, the method of checking insulation resistance in acceptance testing was changed from spot checking to 100-percent testing. As a result of the change, a large amount of unsatisfactory wiring was located and returned to the vendor. The second problem concerned the use of small-gage wire. A large amount of silver-plated-copper 26-gage wire was used, mainly for instrumentation purposes, on the first three lunar module development vehicles. Because of handling problems and the considerable rework that was required, breakage of this wire became a significant problem. To alleviate the problem, 22-gage wire was specified as the smallest wire for use on control and display panels of subsequent vehicles. For the balance of the 26-gage wire applications, the wire material was changed to a copper-chromium-constantan high-strength alloy. Wire breakage, although not completely eliminated, was reduced to a more acceptable level.

A considerable number of problems with connectors on both the command module and lunar module was caused mainly by bent pins, recessed contacts, and damaged environmental seals. To combat these problems, more effective procedures were developed for assembly and handling, protective features were incorporated, and additional inspection points were used during fabrication and installation. Specific improvements also resulted from more extensive use of pictorial aids in training and the introduction of a quality awareness program. The overall result was a substantial reduction of discrepancies.

In the early lunar module vehicles, wire splices became a considerable problem, mainly because of the failure of many solder splices during qualification. Unfortunately, a large number of the faulty splices was contained in harnesses already installed on the spacecraft. Faulty splices were caused by underheating, which often produced cold solder joints, or overheating, which caused wicking of excessive solder into the wire and resulted in insufficient solder to adequately hold the wires together. Development of the aforementioned fabrication techniques and more exacting inspection criteria virtually eliminated the problem on later vehicles.

The use of modular terminal boards became a problem on early Block II command modules. The dimensional tolerances between many of the detailed parts that made up the modular terminal board were excessive. An out-of-tolerance condition accumulated from parts that were, individually, within acceptable limits. This deficiency was not noted in time to preclude installation of defective boards on several spacecraft. In many cases, the out-of-tolerance condition resulted in intermittent contact or no contact between an inserted pin and the mating socket contact. A critical evalation of the circuits for which the modular terminal boards were used revealed that, in some cases, a failure could affect crew safety or mission success. Consequently, a number of modular terminal boards were removed and replaced with components of known quality. Several anomalies are known to have been caused by faulty modular terminal boards, but because of criteria established for circuit evaluation, crew safety or mission success was not jeopardized.

A more complete discussion of the electrical wiring system is given in reference 4-76.

### 4.7.3 Pyrotechnic Devices

The most significant decisions concerning pyrotechnic devices were made very early in the Apollo spacecraft program. These decisions were (1) to develop a single, standard, separable electroexplosive device as a small, common-use item for initiation of all pyrotechnic functions and (2) to use booster modules into which the standard electroexplosive device would be installed and sealed to provide both general- and special-purpose cartridge assemblies for a wide variety of pyrotechnic functions.

Initially, the standard electroexplosive device, designated as the Apollo standard initiator, provided dual-bridgewire circuits for redundancy. Later, as the spacecraft pyrotechnic system designs matured, one bridgewire was found to be adequate. Other highly significant improvements were incorporated, and the resulting configuration was redesignated as the single-bridgewire Apollo standard initiator. About 25 000 dual-bridgewire Apollo standard initiators were manufactured and used without any known failures attributable to the device; about 9000 single-bridgwire Apollo standard initiators were also used in the Apollo spacecraft program with equally successful results.

By the end of the Apollo program, pyrotechnic systems and devices performed a wide variety of critical functions. Typical functions and the devices used to accomplish them are described in reference 4-77.

In general, a serial-qualification test program was followed for each pyrotechnic system; that is, the components were qualified first, the devices next, then the assemblies, and finally, the complete functional system.

Additional information on Apollo pyrotechnics experience may be found in reference 4-77.

### 4.7.4 Sequencing System

The spacecraft sequencing system is the system that provided the automatic timing and control of the pyrotechnic devices used to separate spacecraft stages, fire mortars for deploying parachutes, fire pyrotechnic propellant valves, and perform mission aborts.

The function performed by the sequencing system on the AS-101 and AS-102 flights (boilerplates 13 and 15) was to initiate jettisoning of the launch escape tower. The sequencing system for these early research and development flights utilized motor switches for the pyrotechnic firing output circuits and solid-state circuitry for the timing and control. Motor switches were chosen for output devices because of their insensitivity to vibration and high power switching capability. Solid-state control devices were chosen because of their small volume, light weight and low power requirements.

Failures occurred during the early preflight testing of the solid-state sequencer that resulted in premature operation. Consequently, a relay was added to apply power to the sequencer only when the launch escape tower was to be jettisoned. Because of the test failures and numerous single-point failures, the solid-state sequencer was redesigned to eliminate the single-point failure modes, and the solid-state logic was replaced with relay logic. Relays were also used in place of motor switches because of problems experienced with motor switches during thermal testing. The redesigned sequencer was used on the PA-1, A-001, and A-002 flights (boilerplates 6, 12, and 23) launched from the White Sands Missile Range to test the spacecraft abort and parachute systems. The sequencing system (redundant A and B systems) for these flights consisted of a mission sequencer, an abort backup timer, two earth landing sequence controllers (used to sequence parachute deployment), two tower sequencers, and four silver-zinc batteries (two pyrotechnic and two logic batteries).

During a design review of the operational sequencing system, single-point failure modes were found to exist in the earth landing sequence controllers being built by the parachute contractor. Because eliminating these failure modes would severely impact cost and schedule, a design change was implemented so that pyrotechnic power would not be applied to the earth landing sequence controllers until the time for jettisoning of the forward heat shield. This design was flown on the A-003, PA-2, and A-004 flights (boilerplates 22 and 23A and airframe 002).

The sequencing system for Block I and Block II command and service modules consisted of two redundant systems with two master event sequence controllers, two service module jettison controllers, two reaction control system controllers, two earth landing sequence controllers, and a pyrotechnic continuity verification box. The system was powered by two 3/4-ampere-hour silver-zinc batteries for pyrotechnic functions, and two 40-ampere-hour silver-zinc entry batteries supplied power for logic and bus 1 and 3 of the emergency detection system. A third entry battery powered emergency detection system bus 2. (The emergency detection system is discussed in section 4.7.6.)

During checkout of airframe 009 for the AS-201 flight, a main parachute deploy relay contact in the earth landing sequence controller welded closed due to an overload. Because of this failure, the pyrotechnic simulator and the sequencing system circuitry were modified to prevent overloading. For this modification, series relays were added to the pyrotechnic continuity verification box to eliminate the earth landing sequence controller single-point failure modes and to do away with the need to delay powering of the earth landing sequence controller pyrotechnic bus. The new design was flown on all subsequent spacecraft.

During the AS-201 flight, a spare wire that went through the command and service module umbilical without being deadfaced, shorted during entry. This wire was connected to the arming circuit breaker of the sequencing system; the short opened the circuit breaker and removed power from sequencing system B. Although the remaining system A successfully performed the required earth landing and postlanding functions, this event indicated the requirement to have separate and isolated systems for redundancy.

Two lunar docking event controllers and two lunar module/adapter separation controllers were added to the Block II system to perform the lunar mission functions. Also, the reaction control system controller was redesigned to fit in the aft compartment to allow accessibility to the controller without removing the aft heat shield on the Block II command module. Because of the smaller volume available, the redundant circuits were put into one controller box rather than having two separate boxes.

Another change to the sequential events control system was made because the mission requirements specified that the lunar module crewmen should be able to dock with the command and service module without assistance from the Command Module Pilot. For this operation, the pyrotechnic bus had to remain armed from the time of undocking until redocking after lunar module ascent from the moon. Therefore, to save battery power and still have the panel toggle switch remain in the activated position, motor switches, rather than relays, were used to arm the pyrotechnic bus.

In reviewing the sequencing system before the Apollo 11 mission, two single-point failure modes were identified that could have caused a mission abort. Two emergency detection system abort signals were passed through the same electrical connector, and two booster-engine cutoff commands went through another single connector on the master events sequence controller. Although a change had been made on the Block I command and service module to eliminate these failure modes, the change had not been carried over to the Block II command and service module. The corrective action was to safety-wire the connectors on the Apollo 11 and 12 spacecraft; on subsequent spacecraft, the functions were routed through separate connectors.

A review of crew safety switching functions (explosive device and engine firing functions) on the lunar module identified four single-point failure sources in the engine firing circuitry that could have inadvertently shut down the descent engine: (1) a relay in the stabilization and control assembly, (2) the engine stop pushbutton switches, (3) the abort stage pushbutton switch, and (4) the engine arm toggle switch. Also, the plus-X translation pushbutton switch was a single-point failure source for firing the reaction control system engines. All of these potential failure sources were eliminated by wiring the switch contacts in series.

After the postflight investigation of the problems encountered with the docking system during the Apollo 14 mission, a recommended backup method of docking was provided for Apollo 15 and subsequent flights. A cable was connected to the lunar docking events controller ground support equipment connector in the command module, which would allow power to be applied to the docking probe retract mechanism. Thus, the probe could be retracted and docking would be possible, even if the capture latches on the docking probe did not work.

An emergency cable also was made for the lunar module that would apply power directly to the ascent engine valves if the engine failed to start by either the automatic or the manual firing paths. This cable could also apply power to the explosive devices box through the ground support equipment connector if the explosive devices batteries or arming relays failed. Unlike the command and service module, normal switching of other spacecraft batteries to the explosive devices bus could not be accomplished.

Additional sequencing system functions were used for the J-series missions to jettison the scientific instrument module bay door, to launch the subsatellite, and to jettison the high-frequency antennas. The relays for performing these functions were incorporated into the multiple operations module box.

Reference 4-78 gives a more detailed technical discussion of the sequencing system.

### 4.7.5 Optical and Visual Aids

Optical and visual aids were developed to enable the Apollo crewmen to rendezvous and dock and to increase the precision of lunar landings.

The rendezvous and docking aids were required to furnish the following visual cues to the crewmen.

a. Visual acquisition and gross attitude determination at a minimum distance of 1000 feet

b. Indication of relative attitude and alignment from a minimum distance of 200 feet

c. Range and range-rate information from a minimum distance of 200 feet

d. Indication of fine alignment from a distance of approximately 50 feet to the precontact alignment position

Devices were incorporated in the command and service module and in the lunar module to meet these requirements. Tracking and running lights were provided for visual acquisition and tracking, and optical aids were provided for spacecraft alignment.

The primary docking aid was the crewman optical alignment sight, a collimator device that consisted of a lamp with an intensity control, a reticle, a barrel-shaped housing and mounting track, a combiner glass, and a power receptacle. The reticle had vertical and horizontal 10-degree graduations in a 10-degree segment of the circular combiner glass and an elevation scale of minus 10 degrees to plus 31.5 degrees. The crewman optical alignment sight was focused at infinity so that the reticle image appeared to be superimposed on the docking target located on the other spacecraft.

The lunar module was originally planned to be the active vehicle during docking after ascent from the lunar surface. In the first lunar module design, the forward hatch was also to be the docking port. No auxiliary alignment devices were to be provided aboard the lunar module because the forward hatch was visible to the lunar module crewmen, who could directly observe the docking operation. However, during lunar module development, the forward hatch was enlarged and the shape was changed. The overhead hatch, not directly visible to either of the lunar module crewmen, became the docking port. This necessitated the addition of an alignment device.

For a command-module-active docking, a docking target mounted on the lunar module provided pitch, yaw, and roll alignment. For a lunar-module-active docking operation, a docking target was installed in the right-hand rendezvous window of the command module.

During the transposition and docking phase of an Apollo mission, the command and service module separated from the spacecraft/lunar module adapter and S-IVB, translated forward 100 to 150 feet, pitched 180 degrees, rolled 60 degrees, and translated toward the lunar module for docking. If the translation and docking had to be accomplished in the dark, it was necessary to light the lunar module. This was accomplished using a spotlight mounted on the command and service module.

Both electronic and visual aids were provided for the lunar rendezvous and docking phase of a mission. Range and range-rate data were provided by the rendezvous radar previously discussed in section 4.6.11. A high-intensity tracking light on the lunar module ascent stage permitted visual tracking from the command module and a flashing rendezvous beacon on the side of the service module permitted visual tracking from the lunar module. The lunar module crewmen performed a gross attitude determination at a distance of approximately 2000 feet after command and service module acquisition. This was achieved by viewing the running lights on the service module exterior.

The rendezvous and docking aids performed well during Apollo missions 9 through 17. However, during the Apollo 9 lunar-module-active rendezvous and docking, reflected light caused the lunar module crewman optical alignment sight reticle image to wash out (ref. 4-15). The problem was solved by removing the internal neutral density filter in the alignment sight and replacing it with an external removable filter.

A landing point designator consisting of scales etched on the inner and outer panes of the Commander's window in the lunar module was used in conjunction with hand controller inputs to the guidance and navigation system to redesignate the computer-stored landing point. After pitch-over in the landing sequence, the Commander could see whether or not preselected landmarks were in the proper relationship to the window marks, and thus estimate the direction and magnitude of the correction required to effect a landing in the desired area. The capability to manually redesignate the landing point also permitted the Commander to avoid an unexpected obstacle if necessary, thus increasing the margin of safety. Redesignations were made as early as possible during the landing sequence to conserve propellant.

### 4.7.6 Emergency Detection System

The emergency detection system sensed launch vehicle emergency conditions. Parameters sensed included angular rates, guidance platform failure, engine thrust, stage separation, and angle of attack. Displays of emergency conditions would have provided the crew with the information for determining the necessity for abort action from lift-off through separation from the S-IVB stage; however, provisions were also made for initiation of abort automatically during first-stage boost in the event of extremely time-critical emergencies. Concurrent with abort initiation, the active engines of the launch vehicle would have been shut down to insure safe separation of the spacecraft from the launch vehicle. In addition, the crew could have been requested by ground personnel to manually initiate an abort independently of the sensing parameters of the emergency detection system. Signals originating from either the Launch Control Center or the Mission Control Center would have illuminated an abort light in the crew station to indicate a requested abort. The technique selected for enabling the automatic abort system for flight provided for crew selection of the automatic mode prior to launch followed by automatic enabling in two steps at lift-off. The two final inputs were (1) the commit command from launch vehicle ground support equipment and (2) the separation of the instrument unit umbilical.

The first two Saturn V flights (unmanned) qualified the emergency detection system for use with the large launch vehicle. The system was satisfactorily tested with the automatic abort capability disabled on the Apollo 4 flight. The Apollo 6 spacecraft was flown with the automatic abort capability enabled.

Critical analysis of Saturn V malfunctions in the high-dynamic-pressure region in mid-1967 led to a recommendation that the Saturn guidance platform be backed up during first-stage flight to ensure a safe abort from platform failures. Two approaches considered were:

a. Integration of the launch vehicle rate gyro output

b. Implementation of a spacecraft guidance system interface to the launch vehicle flight control computer

The latter approach had been shelved earlier because of the anticipated difficulty of filtering the effects of vehicle dynamics; however, additional studies indicated that the approach was feasible. NASA management thereafter approved the implementation of spacecraft guidance to the time of earth orbit for the Apollo 10 mission and through translunar injection for Apollo 11 and subsequent missions.

The emergency detection system performed as designed on all manned missions.

### 4.7.7 Development Flight Instrumentation

Development flight instrumentation systems were used to acquire spacecraft flight performance data during the development phase of the Apollo program. Complete systems were furnished for 25 vehicles; however, only 18 systems were actually flown on missions. The remaining seven were used in ground test vehicles or were reassigned for use as spares because of program changes. In several applications, partial development flight instrumentation systems augmented the operational instrumentation systems discussed in sections 4.4.12 and 4.6.12. High reliability and flexibility of use characterized the development flight instrumentation systems. Some of the major factors in obtaining these benefits are discussed.

The peak environmental test levels used in qualification testing were founded on values above the maximum design limits; that is, the levels exceeded any level expected in any vehicle area that might contain development flight instrumentation equipment. This was a major difference between the development flight instrumentation and operational instrumentation qualification philosophy. Most development flight instrumentation components were qualified at a single maximum level, whereas the operational instrumentation system components were tailored for specific environmental zones within the vehicles. The standardized concept was used on the development flight instrumentation to ensure that most equipment could be used in any part of a vehicle without requiring different or additional qualification testing. The use of this concept not only permitted general flexibility in mounting equipment but also simplified procedures, procurement, and paperwork.

Flexibility in accomodating variations in quantity and types of measurements was obtained by using a building-block approach. A system was designed that was basically common to all spacecraft, a maximum degree of standardization was used for component input/output characteristics and test procedures, and programmable signal conditioning units were used. Measurement changes were sometimes implemented on flight vehicles within a matter of hours following a new requirement. Some small systems were designed, qualified, and installed within a period of 3 months.

The control, power wiring, and calibration functions of the development flight instrumentation systems were generally independent of other onboard systems. Because of this independence, development flight instrumentation modifications (particularly late ones) could be implemented with little or no impact on the vehicle operational systems. Also, the development flight instrumentation could be checked out without disturbing other systems. Unscheduled vehicle downtime was frequently used for additional testing of the development flight instrumentation because of its overall independence of operation. The instrumentation could be quickly energized and checked with its own support equipment. Consequently, testing of the development flight instrumentation was easily dovetailed into the vehicle master test plans and provided a convenient means for schedule optimization during the vehicle test operations at the prime contractor plants.

Further details of the design, development and use of the development flight instrumentation are given in reference 4-79.

### 4.7.8 Fracture Control

Stress-corrosion cracking can occur in certain metal alloys when they are simultaneously exposed to a corrosive environment and an appreciable, continuous, tensile stress. A number of structural failures due to stress-corrosion cracking occurred during ground testing of Apollo hardware. Problems encountered with lunar module structural components are discussed in section 4.6.2 and in reference 4-59.

The problem of stress-corrosion cracking in pressure vessels is especially serious because it can result in catastrophic failure of the vessel and damage to hardware near the vessel. In 1965, several titanium pressure vessels containing the propellant nitrogen tetroxide failed in pressure-hold tests. In late 1966, two titanium pressure vessels containing methanol failed. (Methanol is substituted for the propellant Aerozine-50 for test purposes.) In early 1967, two launch escape system steel rocket motor cases failed during acceptance tests. These failures occurred even with rigorous control of materials and fabrication processes. Investigation showed that crack-like flaws had started and grown under test conditions, or that flaws were in existence under actual use conditions and had grown.

The concepts of linear-elastic fracture mechanics were used in late 1966 to examine the relationship between potential flaw sizes in a pressure vessel and the subsequent crack growth possible with different fluids and environments. This examination showed that the sensitivity of a flawed material to existing Apollo pressure vessel environments varied greatly. Methanol and "white" nitrogen tetroxide were particularly aggressive to titanium. Untreated water was found to be very aggressive to certain types of steel.

By the end of 1967, a program was in effect to eliminate compatibility-related failures. As a result, three fluids were restricted from use - methanol, "white" nitrogen tetroxide, and trichloromonofluoromethane. In addition to the restricted use of fluids, the use of Apollo pressure vessels was controlled so that the "compatibility threshold" would not be exceeded for any environment to which the vessels would be subjected. This was accomplished by controlling the number of pressure cycles, the temperature during pressurization, and the fluids used.

Details concerning the problems experienced, the application of fracture mechanics criteria, and a description of the control program for Apollo pressure vessels are presented in reference 4-81.

## 4.8 LUNAR SURFACE MOBILITY

### 4.8.1 Modular Equipment Transporter

To obtain the maximum possible return of data and samples before the lunar roving vehicle became operational, an interim mobility device called the modular equipment transporter was developed. The modular equipment transporter, shown in figure 4-22, was a two-wheeled tubular-aluminum cart which could be folded for stowage in the modular equipment stowage assembly of the lunar module descent stage. Although the unloaded transporter weighed only 30 pounds, it was capable of carrying 360 pounds; however, the actual load was much lighter. The low temperature limit to which the tires were designed (-70° F) required the use of a special synthetic rubber for both tires and tubes.

The transporter was used only on the Apollo 14 mission and it permitted the range of the lunar surface traverse to be increased beyond that of the previous lunar landing missions. The device was designed to be pulled behind a crewman and it could carry various items of equipment for lunar surface exploration as well as lunar samples. The items of equipment included cameras, geological sampling tools and bags, and a portable magnetometer experiment. The transporter also served as a mobile workbench.

Since constant gripping of the pulling handle against the suit pressure would have tired the hand and arm muscles of the crewmen, the handle was designed to permit control of the transporter without requiring constant gripping. A triangular shape was used. The base of the triangle was long enough for insertion of the hand but the dimension perpendicular to the base was shorter than the width of the hand. Rotation of the hand toward the shorter dimension applied sufficient pressure for pulling and rotational control.

The transporter was stable, easily pulled, and proved to be very advantageous for both extravehicular activities on the Apollo 14 mission. Only at maximum speeds did the transporter evidence any instability and, then, only because of rough terrain. The instability was easy to control by hand motion.

### 4.8.2 Lunar Roving Vehicle

The lunar roving vehicle (fig. 4-23), used for the three extended-stay lunar missions, was a four-wheeled manually-controlled, electrically-powered vehicle that carried the crew and their science equipment over the lunar surface. The increased mobility and ease of travel made possible by this vehicle permitted the crew to travel much greater distances than on previous lunar landing missions. The vehicle was designed to carry the two crewmen and a science payload at a maximum velocity of approximately 16 kilometers per hour on a smooth, level surface, and at reduced velocities on slopes up to 25 degrees. It could be operated by either crewman from a control and display console located on the vehicle centerline. The deployed vehicle was approximately 10 feet long, 7 feet wide and 45 inches high. The chassis was hinged such that the forward and aft sections folded back over the center portion, and each wheel suspension system rotated so that the folded vehicle would fit in quadrant I of the lunar module descent stage for transport to the moon. The gross operational weight ranged from approximately 1530 pounds to 1600 pounds, of which 450 pounds was the weight of the vehicle itself and the remainder was the weight of the crewmen, tools, communications equipment, and the science payload.

The wheels had open-mesh tires with chevron tread covering 50 percent of the surface contact area. A separate traction drive consisting of a harmonic-drive reduction unit, drive motor, and brake assembly was provided for each wheel. A decoupling mechanism permitted each wheel to be decoupled from the traction drive, allowing any wheel to "free-wheel." An odometer on each traction drive transmitted pulses to a navigation signal processing unit. The harmonic drive reduced the motor speed and allowed continuous application of torque to the wheels at all speeds

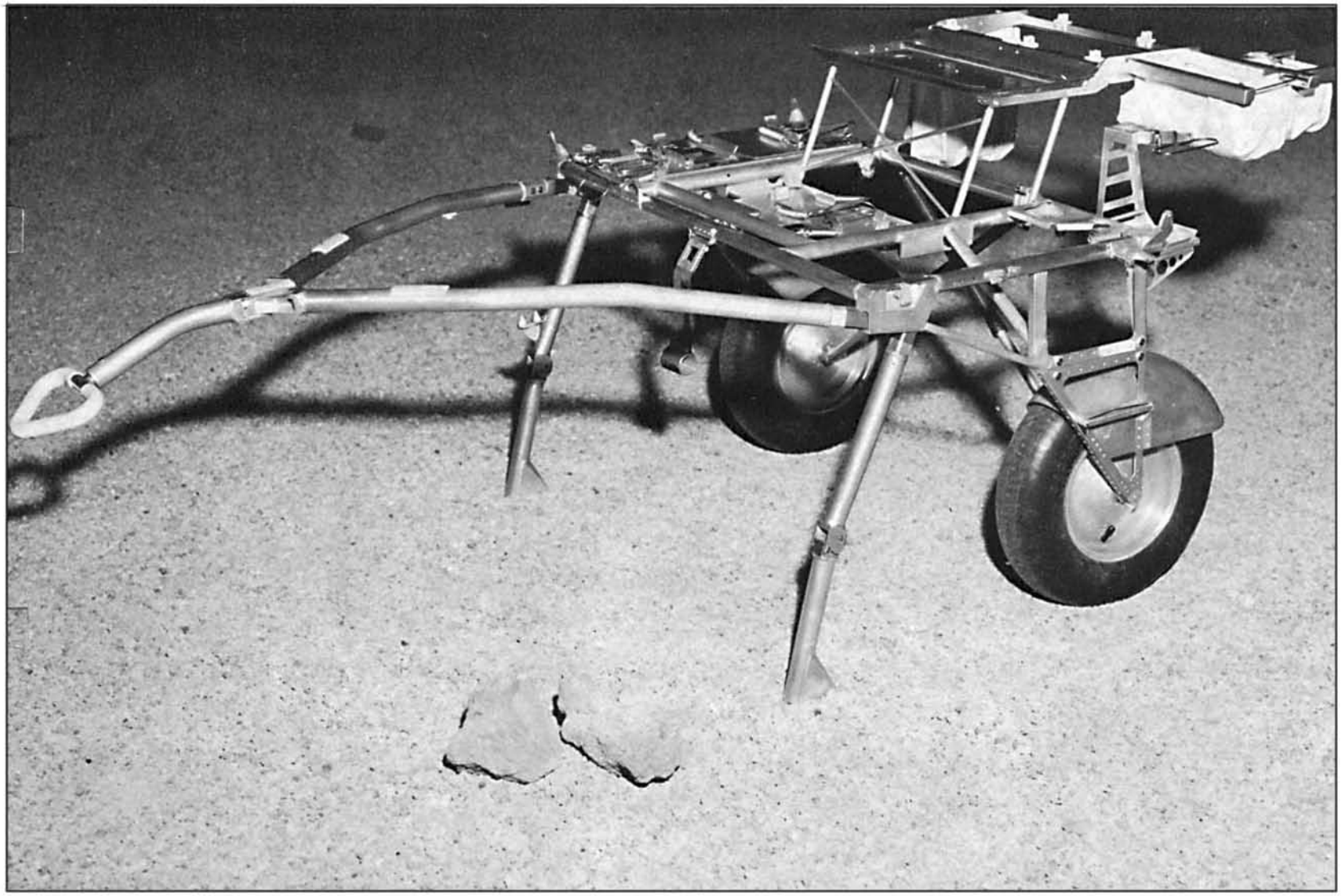

Figure 4-22.- Modular equipment transporter.

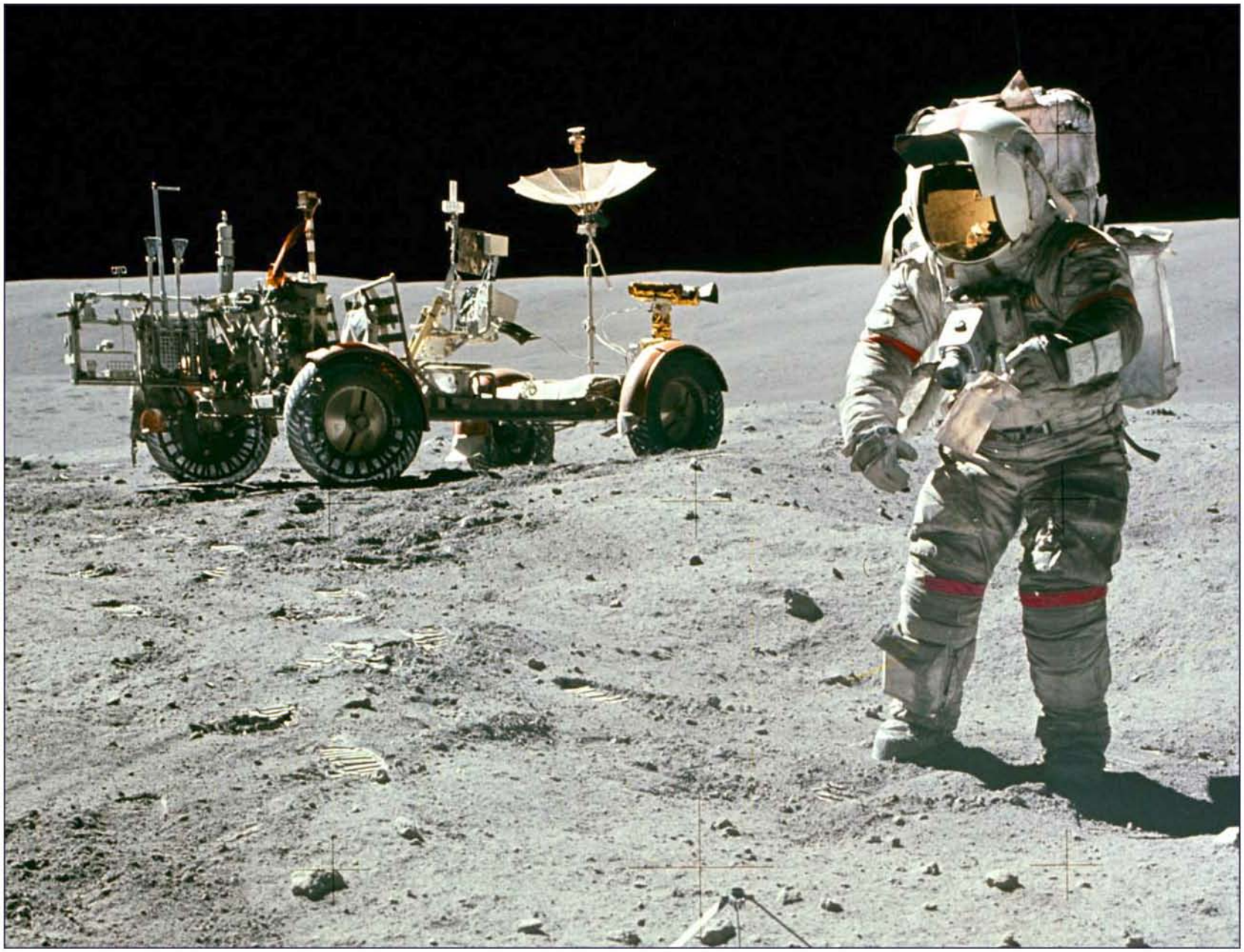

Figure 4-23.- View of Apollo 16 lunar roving vehicle and crewman.

without requiring gear shifting. Speed control for the motors was furnished by pulse-width modulation from the drive controller electronic package. The motors were instrumented for thermal monitoring and the temperatures were displayed on the control and display panel.

Steering was accomplished by two electrically driven rack and pinion assemblies with each assembly steering a pair of wheels. Simultaneous use of both front and rear wheel steering resulted in a minimum turning radius of 122 inches. Steering was controlled by moving the hand controller left or right from the neutral position. This operation energized the separate electric motors, and through a servo system, provided a steering angle proportional to the position of the hand controller. The front and rear steering assemblies were electrically and mechanically independent of each other. In the event of a malfunction, steering linkages could be disengaged and the wheels centered and locked so that operations could continue by using the remaining active steering assembly.

Speed control was maintained by the hand controller. Forward movement proportionately increased the forward speed. To operate the vehicle in reverse, the hand controller was pivoted rearward. However, before changing forward or reverse directions, the vehicle had to be brought to a full stop before a commanded direction change could be made. Braking was initiated in either forward or reverse by pivoting the hand controller rearward about the brake pivot point. Each wheel was braked by conventional brake shoes driven by the mechanical rotation of a cam in response to the hand controller.

The vehicle was powered by two 36-volt silver-zinc batteries, each having a capacity of 120 ampere-hours. During lunar surface operations, both batteries were normally used simultaneously on an approximate equal load basis. The batteries were located on the forward chassis and were enclosed by a thermal blanket and dust covers. The batteries were monitored for temperature, voltage, output current, and remaining ampere-hours by means of displays on the control and display panel. The circuitry was designed so that if one battery failed, the entire electrical load could be switched to the remaining battery.

The control and display console was separated into two main functional parts: navigation on the upper part and monitoring controls on the lower part. Navigation displays included pitch, roll, speed, heading, total distance traveled, as well as the range and bearing back to the lunar module. Heading was obtained from a sun-aligned directional gyro, speed and distance from wheel rotation counters, and range and bearing were computed from these inputs. Alignment of the directional gyro was accomplished by relaying pitch, roll, and sun angle readings to earth where an initial heading angle was calculated. The gyro was then adjusted by slewing with the torquing switch until the heading indicator read the same as the calculated value.

Thermal control devices were incorporated into the vehicle to maintain temperature sensitive components within the necessary temperature limits. The thermal devices consisted of special surface finishes, multilayer insulation, space radiators, surface mirrors, thermal straps, and fusible mass heat sinks. The basic concept of thermal control for the forward chassis components was to store energy during operation and to transfer energy to deep space while the vehicle was parked between extravehicular activities. The space radiators were mounted on the top of the signal processing unit, on the drive control electronics, and on the two batteries.

The mission performance of the lunar roving vehicles used on the Apollo 15, 16 and 17 missions was excellent. The vehicles significantly increased the capability to explore and enhanced data return. Performance data for the three vehicles are given in table 4-IX. Several of the minor problems encountered during lunar surface operations are discussed in the following paragraphs.

4.8.2.1 Apollo 15.- After lunar module ascent, the video signal was lost from the lunar surface television camera mounted on the lunar roving vehicle. Postflight analysis and ground tests showed that the loss had probably been caused by opening of the auxiliary power circuit breaker under combined electrical and thermal loads. For the Apollo 16 and 17 missions, the auxiliary circuit breaker capacity was increased from 7.5 to 10 amperes, and a switch was added so that the circuit breaker could be bypassed at the end of the final extravehicular activity, preventing loss of power after lunar module ascent. Further details of the Apollo 15 lunar roving vehicle performance are given in reference 4-21.

TABLE 4-IX.- LUNAR ROVING VEHICLE PERFORMANCE

| Values | Apollo 15 | Apollo 16 | Apollo 17 |
|---|---|---|---|
| Drive time, hr:min . . . . . | 03:02 | 03:26 | 04:29 |
| Surface distance traveled, km . . . | 27.9 | 26.7 | 33.8 |
| Extravehicular activity duration, hr:min . . . . . | [a]18:35 | 20:14 | 22:04 |
| Average speed, km/hr . . . . . | 9.2 | 7.7 | 7.6 |
| Energy rate, A-h/km (lunar roving vehicle only) . . . . . | 1.9 | 2.1 | 1.64 |
| Ampere-hours consumed (242 available) . . . . . | 52.0 | 88.7 | 73.4 |
| Navigation closure error, km . . . . | 0.1 | 0 | 0 |
| Number of navigation updates . . . . | 1 | 0 | 0 |
| [b]Maximum range from lunar module, km . . . . . | ∿4.4 | ∿4.6 | ∿7.3 |
| Longest extravehicular activity traverse, km . . . . . | 12.5 | 11.4 | 18.9 |

[a]Does not include standup extravehicular activity time of 33 minutes 7 seconds.

[b]Map distance measured radially.

4.8.2.2 Apollo 16.- The significant problems that occurred during the Apollo 16 mission were:

a. The rear steering was temporarily lost.

b. Meters gave anomalous indications.

c. A rear fender extension was lost.

The rear steering was inoperative after initial powerup of the vehicle. However, the next time the vehicle was driven, both front and rear steering were operative. No corrective action was taken because the problem could not be isolated and the vehicle design and testing were considered adequate.

Anomalous electrical system meter indications were noted at initial powerup of the vehicle and during the second and third extravehicular activities. No single cause could be postulated to explain all of the indications. Since the cause could not be determined, no corrective action was taken for the Apollo 17 lunar roving vehicle.

On the second traverse, the attitude indicator pitch scale fell off but the needle could still be used to estimate pitch attitudes. Also, incorrect matching of switches caused removal of drive power from a pair of wheels and a resultant loss of navigation displays. This problem cleared when the normal switch configuration was restored.

The right rear fender extension was knocked off during the second traverse. As a result, a great deal of dust was thrown over the top of the vehicle, showering the crew and the vehicle during the remainder of the lunar surface activities. Corrective action for Apollo 17 consisted of adding fender extension stops to each fender. Additional details of mission performance are given in reference 4-22.

4.8.2.3 Apollo 17.- At initial powerup, the lunar roving vehicle battery temperatures were higher than predicted. This was partially due to the translunar attitude profile flown and partially to a bias in the battery temperature meter. Following adequate battery cooldown after the first extravehicular activity, temperatures for the remainder of the lunar surface operations were about as predicted.

The significant problems that occurred during the mission were:

a. The battery 2 temperature indication was off-scale low.

b. The right rear fender extension was broken off.

The off-scale battery 2 temperature indication was noted at the beginning of the third extravehicular activity and the condition continued for the remainder of the lunar surface operations. The most probable cause was a shorted thermistor in the battery. The same condition was noted on ground testing of two other batteries.

The right rear fender extension was accidentally knocked off at the lunar module site during the first extravehicular activity. The fender extension was replaced and taped into position, but the extension was lost after about an hour's driving. Prior to the second extravehicular activity, a temporary fender was successfully improvised from maps and clamped into position. Further details on the performance of the Apollo 17 lunar roving vehicle are given in reference 4-23.

## 4.9 LUNAR SURFACE COMMUNICATIONS

### 4.9.1 Introduction

The lunar surface communications system, as flown on the final three missions, consisted of (1) an extravehicular communications unit in each of the two lunar surface crewmen's backpacks, (2) a lunar communications relay unit on the lunar roving vehicle, and (3) a ground-commanded television assembly on the lunar roving vehicle.

Earlier system configurations were less complex. In the initial concept, the extravehicular and lunar module communications systems were to support a single extravehicular crewman with the second crewman remaining in the lunar module connected to the lunar module communications system. However, as the result of the decision to perform a two-man extravehicular activity, a new extravehicular communications system was developed, without modification to the lunar module, wherein the Lunar Module Pilot's voice and telemetry data were combined with the Commander's voice and telemetry data and transmitted as a composite signal to the lunar module. The composite signal was then relayed to the earth.

The development of the lunar roving vehicle meant that the crew would have the capability of going beyond the range of reliable radio communications if the existing communications system were used. Therefore, a lunar communications relay unit was provided on the lunar roving vehicle that operated independently of the lunar module.

Television camera equipment used to provide live coverage of lunar surface extravehicular activity underwent several changes during the Apollo program. On the Apollo 11 mission, a black-and-white slow-scan camera was mounted in the lunar module descent stage and was energized from the lunar module cabin to obtain coverage of the Commander descending the ladder and stepping onto the lunar surface. Subsequently, this camera was mounted on a tripod to monitor the extravehicular activities. On Apollo 12 and subsequent missions, the black-and-white camera was replaced with a color camera modified for operation on the lunar surface. Beginning with Apollo 15, a ground-commanded color television camera was mounted on the lunar roving vehicle. The lunar-communications relay unit transmitted the video signal to the earth and received commands from the earth for control of camera pointing and light settings.

### 4.9.2 Extravehicular Communications Unit

On the Apollo 11, 12, and 14 missions, the extravehicular communications units transmitted voice and telemetry data from the crew to the lunar module in VHF ranges. The signal was retransmitted to earth through the lunar module S-band communications link as shown in figure 4-24. Conversely, voice communications from earth were received by the lunar module on the S-band equipment and retransmitted to the crew on the VHF equipment. The small power output of the transmitters in the extravehicular communications units limited lunar exploration travel to line-of-sight distances (less than 2.5 miles from the lunar module).

The extravehicular communications unit was required to fit into a 5-cubic-inch volume that was available in the portable life support system. Therefore, minimizing the physical size of the unit was important. Standard miniaturization techniques served for the transmitters, receivers, and signal processors; but the triplexer, which allowed a single antenna to be used on three frequencies by three devices at one time, required extensive design effort to fit the unit within the available space.

The extravehicular communications units were used on the six Apollo lunar landing missions, and the units operated satisfactorily. The quality of the voice transmission permitted identification of the crewmen, and the accuracy of telemetry data transmission allowed precise monitoring of life support functions.

### 4.9.3 Lunar Communications Relay Unit

The lunar communications relay unit was developed for the Apollo 15, 16, and 17 missions. The unit was made up of four major components: an electronics assembly that contained radio transmitters and receivers, a battery, a low-gain antenna, and a high-gain antenna. This equipment was stowed in the lunar module until the lunar roving vehicle was deployed. The crew then installed the system on the lunar roving vehicle. The electronics assembly was 22 by 16 by 6 inches in size and weighed 54 pounds. Power for the electronics assembly was supplied by a 29-volt battery that was installed by a crewman. However, provisions were also made to use the lunar roving vehicle batteries as an alternate power source. The low-gain and high-gain antennas were installed on the lunar roving vehicle and connected to the electronics assembly by the crew. The low-gain antenna was used for earth voice/data transmission when the lunar roving vehicle was in motion. The high-gain antenna was accurately pointed to earth manually when the lunar roving vehicle was stopped so that television signals could be transmitted to earth. The system capabilities are shown in figure 4-25.

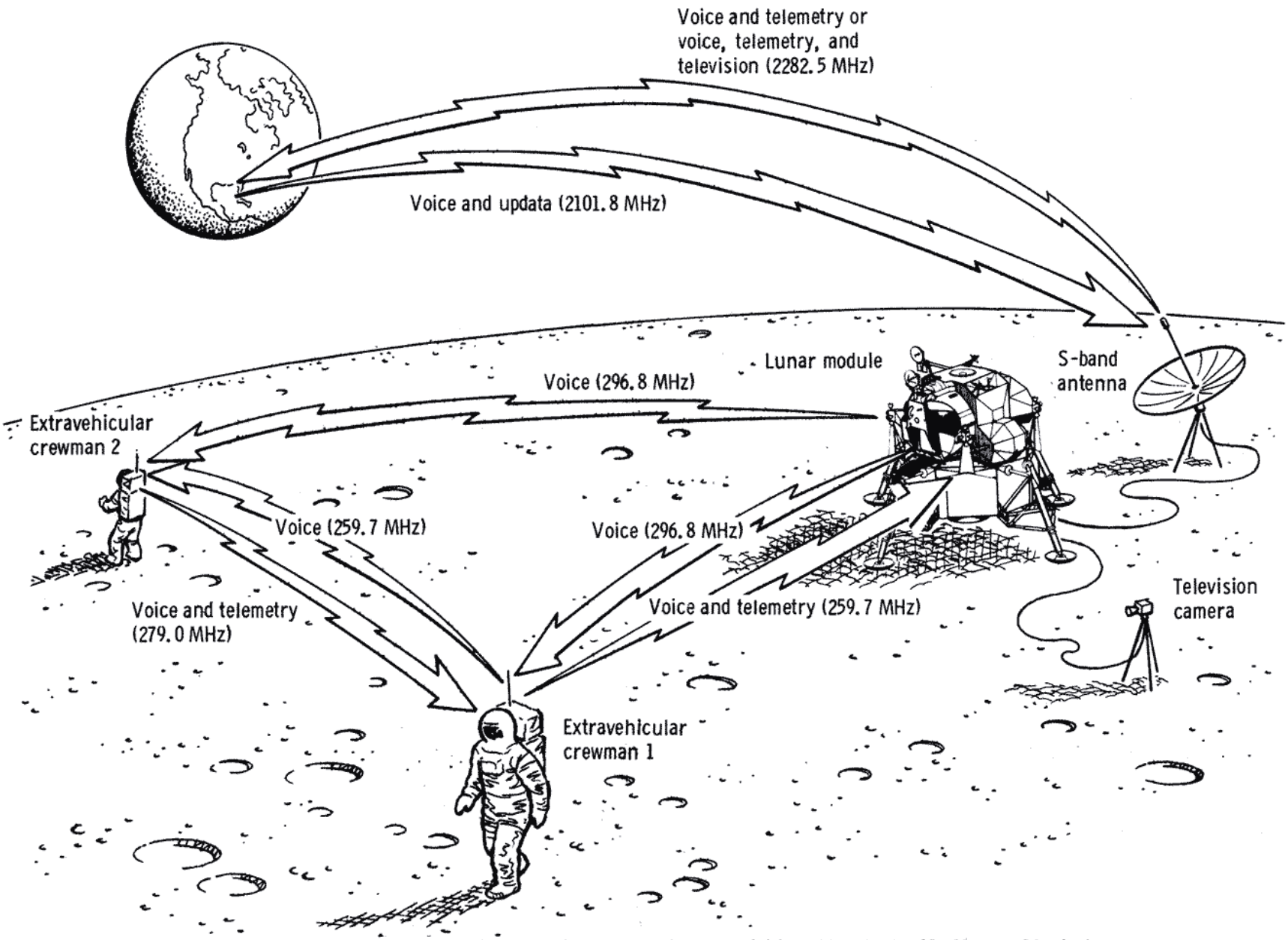


Figure 4-24. - Communications capabilities during extravehicular activities of the Apollo 11, 12, and 14 missions.

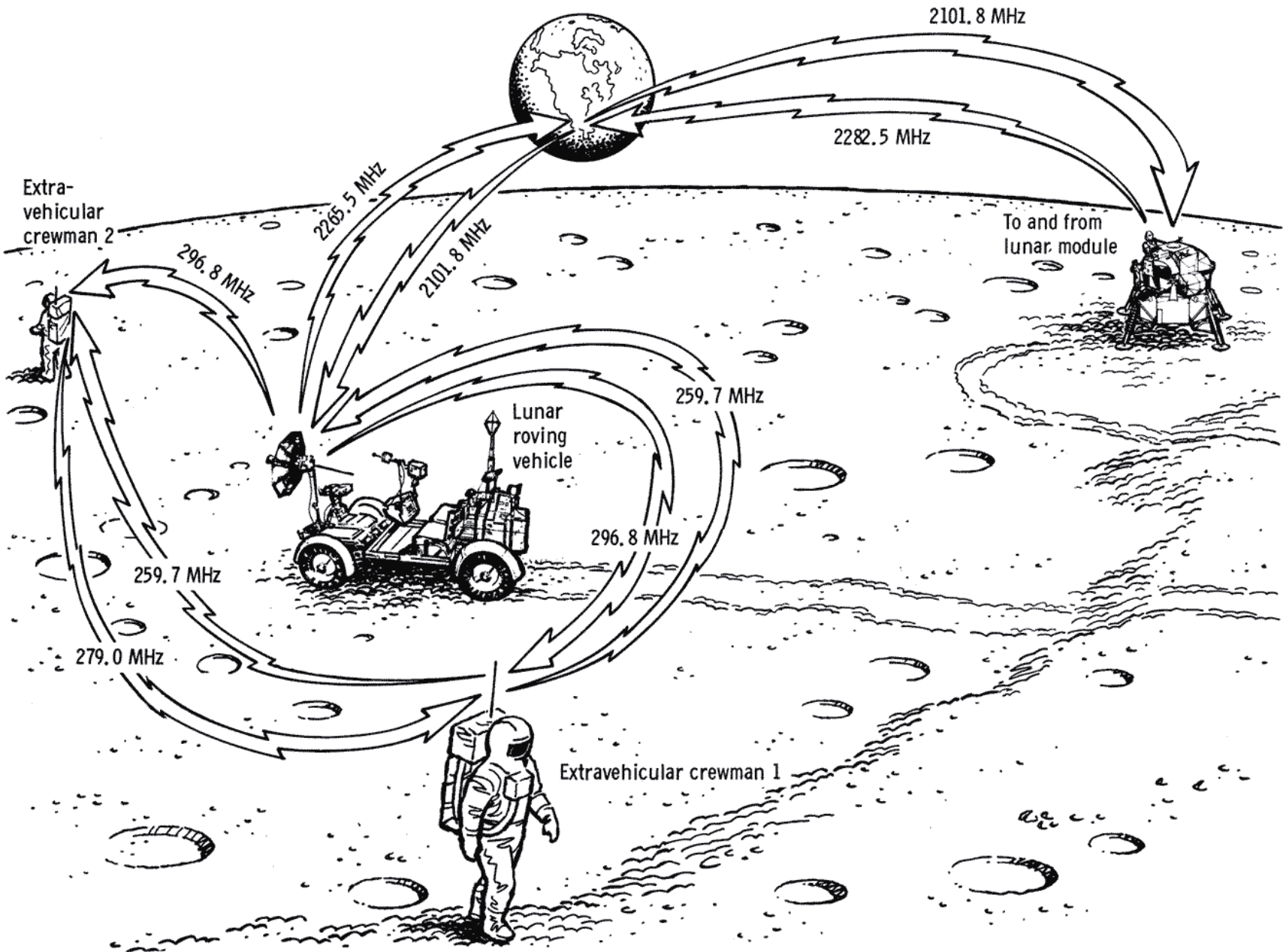


Figure 4-25. - Communications capabilities during extravehicular activities of Apollo 15, 16, and 17 missions.

The system development problems were primarily associated with the requirements for minimum weight and power consumption, high reliability, independent operation, ease of system installation, and control by a pressure-suited crewman. Independent operation meant that the system had to supply its own power and maintain its proper thermal environment. In the event of lunar roving vehicle failure, the system also had to operate while being hand-carried by a crewman.

The reliability of the lunar communications relay unit system was evidenced by the fact that no failures occurred during the prelaunch testing nor during the lunar missions. The system was used for approximately 6 hours on each of the three extravehicular activities of each mission. The quality of the transmitted voice and data was excellent. The received television quality was dependent on the available tracking coverage of the earth stations. Stations with 85-foot-diameter antennas were located geographically to provide 24-hour reception, and the signal strength received by these stations resulted in a relatively good television picture, although some noise was evident. Reception with 210-foot-antenna stations, when available, increased the signal level and provided excellent picture quality.

### 4.9.4 Television Camera Systems

Experience during the early Apollo missions showed that an inordinate amount of crew time was being spent in adjusting and pointing the television camera, and that useful coverage was available only within a small area on the lunar surface for each setting of the camera. (Coverage was limited by the 100-foot length of the cable which connected the camera to the lunar module.) With the planned addition of the lunar roving vehicle on the Apollo 15 mission, the capability for remote control of the television camera from the Mission Control Center was incorporated and changes were made in the camera which would also provide the capability for optimum public affairs and scientific operations coverage.

The overall ground commanded television assembly consisted of a color television camera and a television control unit. The television camera with its positioning assembly, was connected to the lunar communications relay unit by a cable which carried ground commands to the television control unit and returned the television pictures to the lunar communications relay unit for transmission to earth. The television camera used a silicon intensifier target tube and a field sequential color wheel. Use of the silicon intensifier target tube provided freedom from burn, even if the camera was pointed directly at the sun. Also, the camera's automatic light control permitted operation over an extremely wide range of scene brightness levels. The camera weighed approximately 13 pounds, required 11.5 watts of power, and was 4 inches high, 6.5 inches wide, and 16.5 inches long (including a 6 to 1 zoom lens). Camera azimith, elevation, power, automatic light control, lens zoom, and lens iris position were capable of being remotely controlled by ground command with manual override provisions for crew operation.

Experience with the ground controlled television assembly on the Apollo 15 mission revealed a much greater problem with flying dust from the lunar roving vehicle than had been anticipated. Crispness of the television picture was badly degraded, particularly when sunlight impinged directly on the dusty camera lens. For the Apollo 16 and 17 missions, the crews were furnished with a brush that was used to clean the lens at the beginning of each science station stop. In addition, a lens hood was attached to the front of the camera to reduce the effect of the sunlight on the lens. Resolution and clarity of the picture were sufficient to assist the geologists in guiding the crewmen and, in some cases, picture detail was good enough to allow flight controllers to assist the crews during the extravehicular activities.

On the Apollo 15 mission, the elevation mechanism of the ground controlled television assembly failed because of high temperatures. The failure occurred in a plastic clutch-facing disc. The entire clutch assembly was redesigned prior to the Apollo 16 mission using a metal-to-metal clutch.

On the Apollo 17 mission, the camera tripod and cabling which had been used to connect the ground controlled television assembly camera to the lunar module to save weight were omitted and television signals were sent to earth only through the lunar communications relay unit while the camera was mounted on the lunar roving vehicle.

Additional information on the Apollo television system is contained in reference 4-81.

## 4.10 FLIGHT CREW SYSTEMS AND EQUIPMENT

Two major hardware areas — the extravehicular mobility unit and the crew station configuration and equipment — are described in this section. Similar to the Mercury and Gemini space suits, the Apollo extravehicular mobility unit was an anthropomorphic miniature spacecraft capable of providing the crewman with life support and mobility. The unit served as a life-sustaining pressure vessel during lunar exploratons and transearth extravehicular activities and as a backup to the command module pressure system. The crew station configuration and the crew equipment for both the command module and the lunar module changed constantly throughout the Apollo program because of expanded mission objectives, flight experience, correction of design deficiencies, new interface requirements, and crew recommendations. These changes as they relate to program development are discussed.

### 4.10.1 Extravehicular Mobility Unit

The extravehicular mobility unit (fig. 4-26) was comprised of two main subsystems: (1) the pressure garment assembly and its accessories and (2) the portable life support system. Emergency oxygen and water-cooling systems were provided in case of portable life support system failure. The subsystems and some of the accessories of the extravehicular mobility unit are shown in figure 4-27.

4.10.1.1 Pressure garment assembly.- The pressure garment assembly was a man-shaped pressure vessel which enclosed and isolated the crewman from the space environment. In addition to providing protection against the vacuum and temperature extremes of space, the extravehicular suit permitted the crewman to move about freely on the lunar surface and perform useful work. Such mobility requirements as crawling through the small hatch of the lunar module, climbing the lunar module ladder, walking over rough terrain, and driving the lunar roving vehicle were met.

The pressure garment assembly designed to satisfy these requirements was a multilayered, custom-fitted, flexible garment (fig. 4-28). Progressing from the crewman's skin outward, his lunar attire consisted of:

a. A liquid-cooled garment (a separate underwear garment containing small tubing through which cool water was circulated to transfer metabolic heat from the body)

b. A comfort liner of lightweight nylon fabric

c. A gas-tight layer of Neoprene-coated nylon acting as a bladder

The bladder layer included convoluted joints at the ankles, knees, thighs, waist, shoulders, elbows, and neck. These bellows-type joint sections were molded of a special latex and natural rubber compound that gave the suit its bending capability. Gas-containing elements had a nylon fabric restraint layer that prevented the suit from ballooning excessively and caused the suit to assume the anthropomorphic shape. The entire suit was ventilated with oxygen for body cooling, carbon dioxide removal, and maintaining the helmet visor in a fog-free condition.

The pressure garment assembly was covered with a series of conformal material layers to reduce the heat flow into and out of the suit. The cover also acted as a micrometeoroid protection layer and was referred to as an "integrated thermal micrometeoroid garment." The cover consisted of seven separate layers of aluminized plastic film separated by very thin Dacron material. In space, a vacuum between the layers eliminated heat transfer by convection. since the layers did not effectively contact each other, heat flow by conduction was very small. Heat flow by radiation was reduced by the reflective aluminum surfaces.

The crewman wore an almost unbreakable plastic helmet that had the appearance of a fish bowl. Special visors covered the helmet to reduce the amount of light and heat that reached the head. The crewman's gloves were custom molded to provide the best finger tactility.

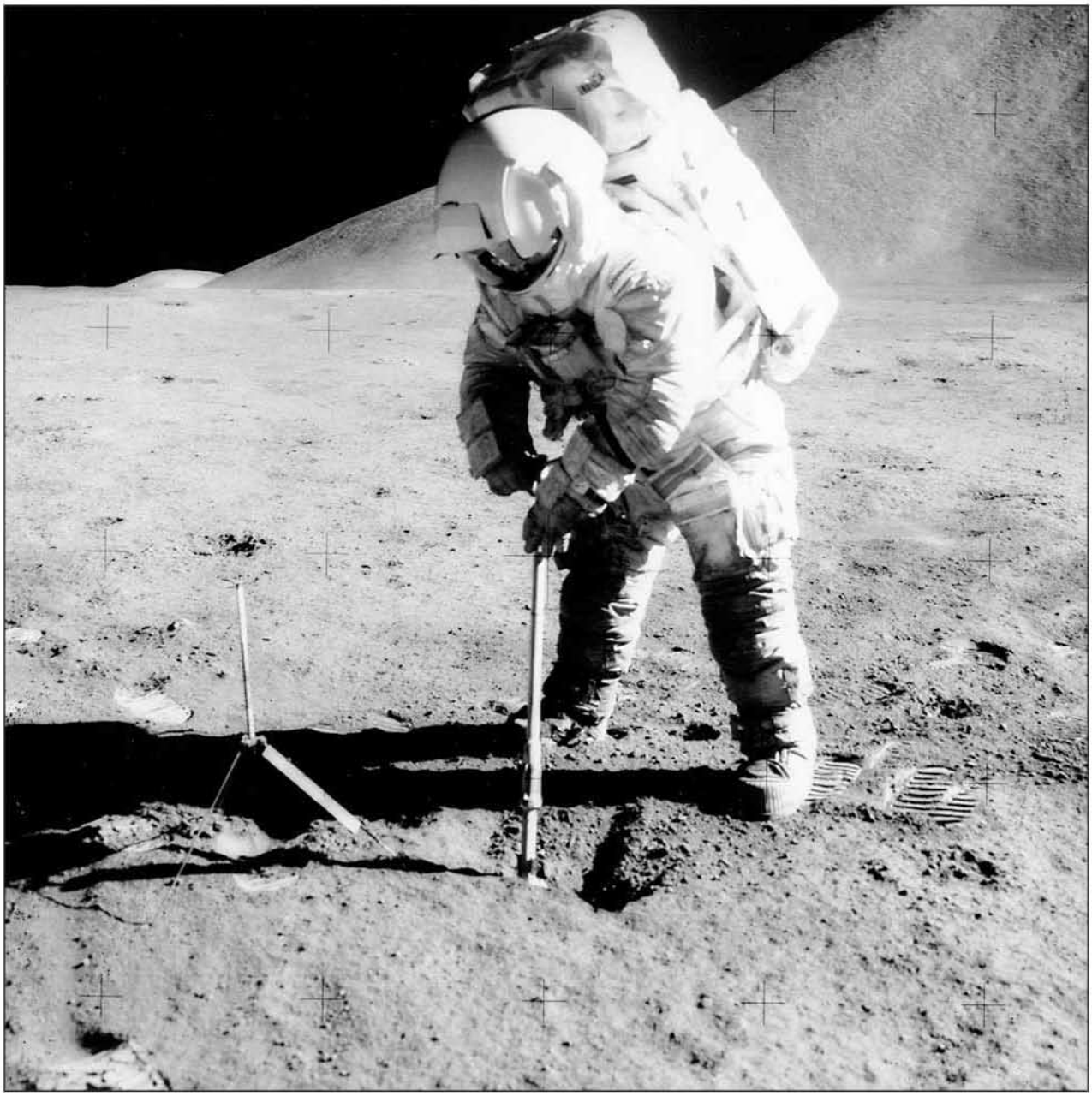

Figure 4-26.- Lunar surface extravehicular mobility unit supporting astronaut activity.

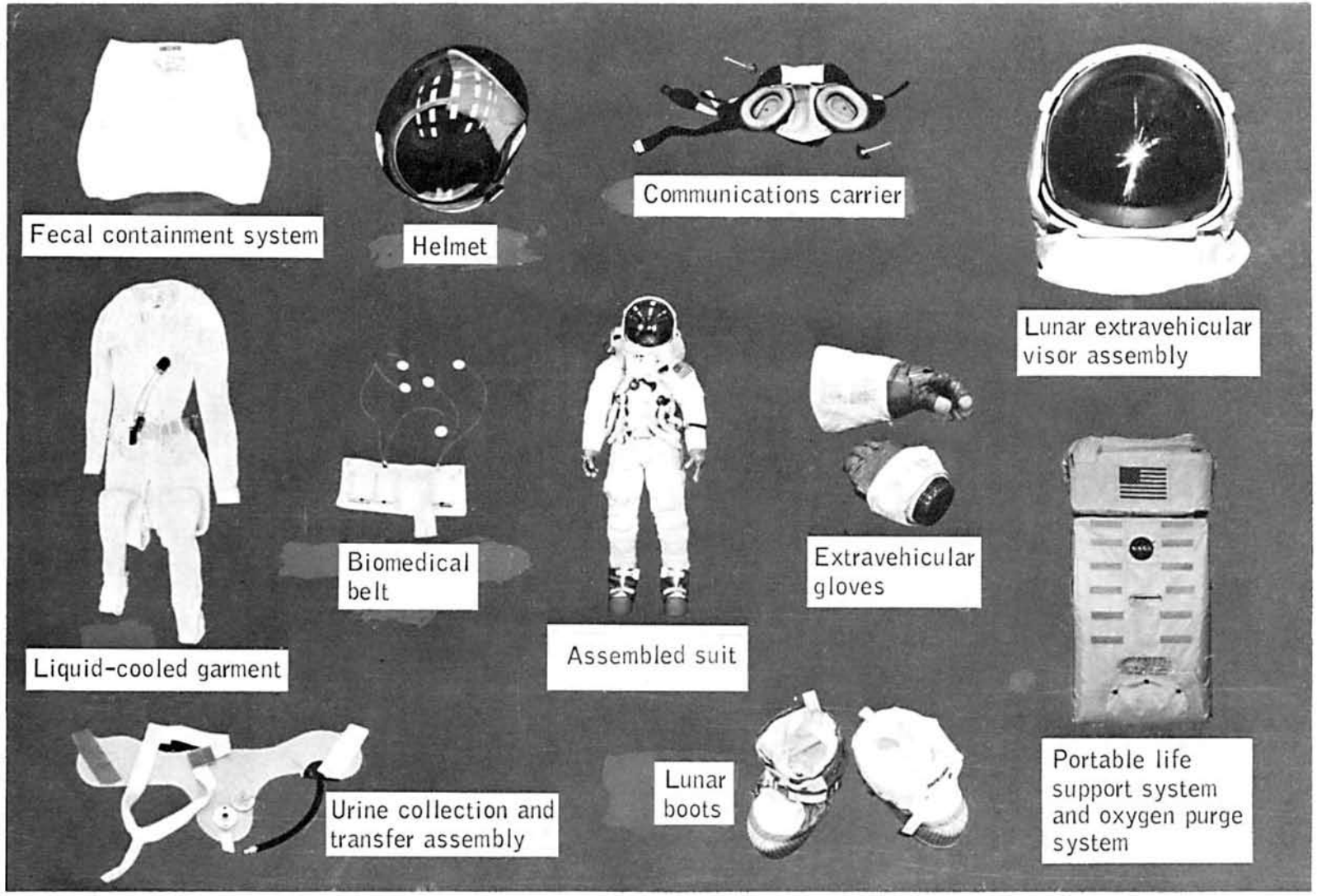


Figure 4-27.- Major subsystems of the extravehicular mobility unit.

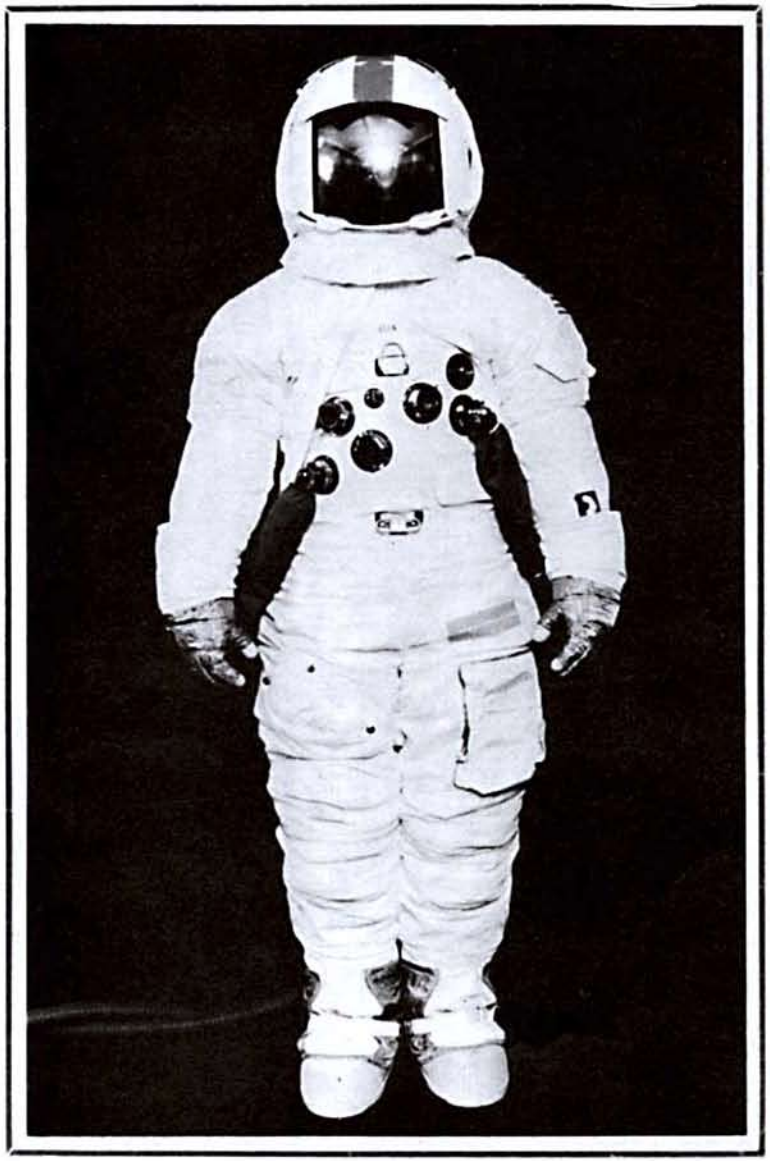

(a) Outer protective garment and accessories

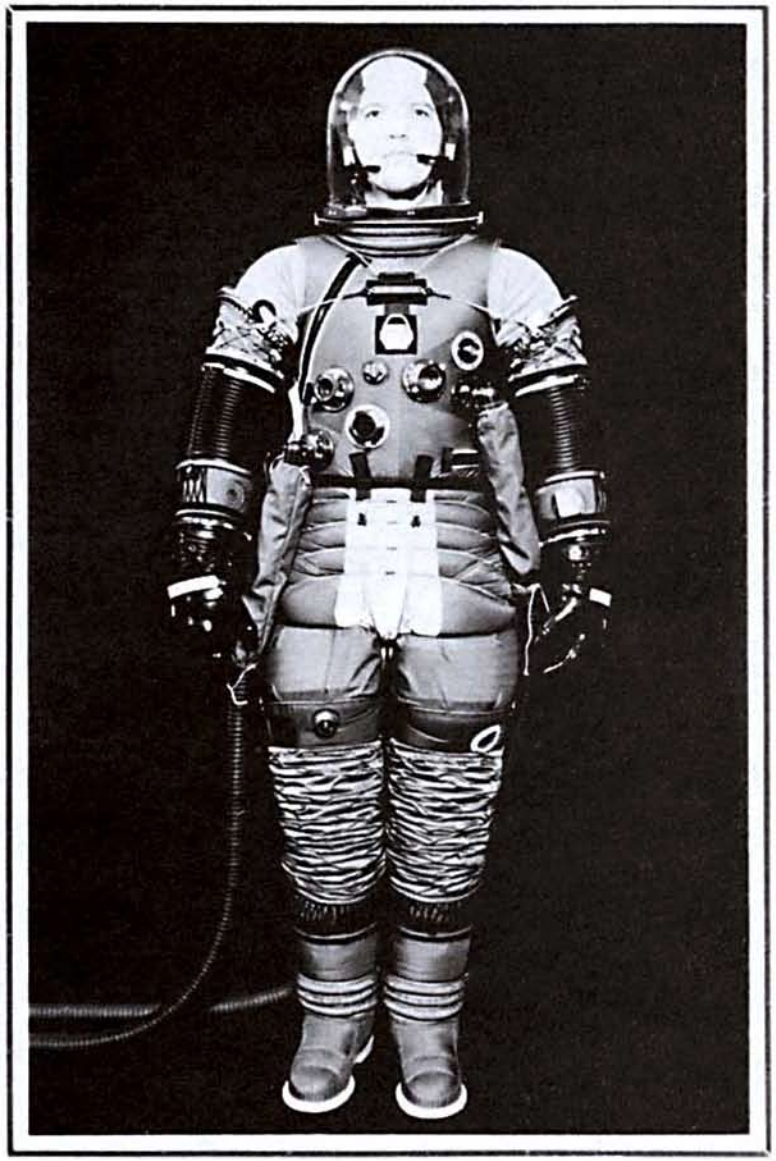

(b) Pressure garment assembly

Figure 4-28.- Lunar surface extravehicular suit.

Other items used in conjunction with the pressure suit, depending on the specific situation, consisted of:

a. Constant wear garment

b. Fecal containment system

c. Communications carrier

d. Bioinstrumentation

e. Urine collection and transfer assembly

f. Lunar extravehicular visor assembly

g. Lunar boots

h. Purge valve

Several of these items are included in figure 4-27.

The suit and its related equipment were tested in rigid test programs to demonstrate their performance. Basic development testing was conducted to determine the ultimate capability of the equipment. Interface testing was conducted to verify the limits of the compatibility of each item with the mating equipment. Environmental testing demonstrated system performance during and after exposure to all the environmental conditions in which the suit was designed to operate. Another form of testing, cycle qualification, was undertaken to establish the wearability or useful life.

Several significant problems were revealed that required changes to the initial suit configuration as a result of the testing and actual flight experience. In cycle testing, a particular movement used for picking up rocks from the lunar surface loaded a restraint line of the suit to a much higher level than anticipated. The entire line of restraint was redesigned to take the induced loads. This redesign required new cable swages, stitching techniques, and cord terminations. Field testing of training suits revealed deterioration of one of the rubberized components. The cause of the degradation was determined to be an insufficient quantity of an ingredient that retards aging and oxidation. a change was made in the formulation of the material and, as a result, much of the qualification testing had to be repeated.

With the introduction of the lunar roving vehicle, a new requirement was imposed on the pressure garment assembly: the crewmen had to sit in a normal driving position. A waist joint was designed into the suit to meet this need. Another change was that the vertical entrance zipper on the back of the suit had to be relocated. A different type of zipper was used because the original configuration could not seal reliably in the new application. As testing progressed, the need to improve some of the zipper manufacturing equipment was identified and X-ray inspection of each zipper was performed. Each zipper had approximately 700 teeth, each of which had to meet eight different dimensional criteria. The detailed inspection, although very tedious, eliminated the possibility of using potentially defective units.

4.10.1.2 Portable life support system.- The portable life support system (fig. 4-29) was a self-contained unit that controlled the environment within the space suit during extravehicular activities on the lunar surface. The unit was worn as a backpack (fig. 4-26) and was connected to the suit by umbilicals. System development was based on previous spacecraft (Mercury and Gemini) environmental control system technology, but the Apollo unit was the first truly portable, self-contained life support system to be used in the space program.

Five subsystems made up the portable life support system: a primary oxygen subsystem, an oxygen ventilating circuit, a water transport loop, a feedwater loop, and a communications system. The primary oxygen subsystem supplied oxygen for breathing and pressurization of the pressure garment assembly. The oxygen ventilating circuit cooled oxygen through the pressure garment assembly and the portable life support system. In doing so, the circuit removed carbon dioxide and contaminants by interaction with lithium hydroxide and activated charcoal and removed excess water entering the oxygen flow (mainly from the crewman's respiration and perspiration) by use

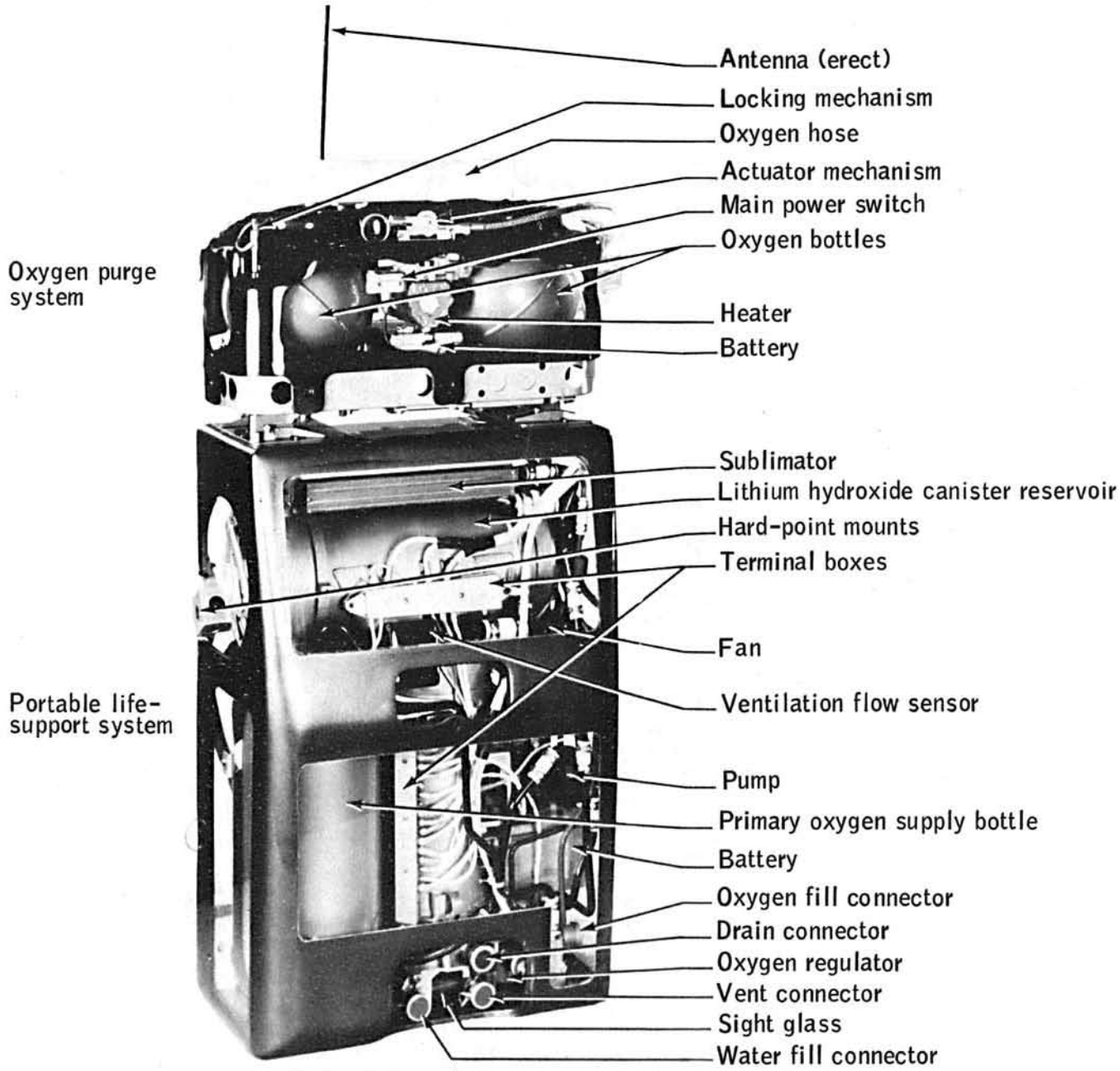


Figure 4-29.- Portable life support system and oxygen purge system.

of a water separator. The water transport loop circulated cool water through the liquid-cooled garment to cool the crewman by removing metabolic heat and any heat leaking into the suit from the external environment. The feedwater loop supplied expendable water, stored in a rubber-bladder reservoirs, to a heat-rejecting porous plate sublimator, a self-regulating heat exchanger. The communications system provided primary and backup dual voice transmission and reception, telemetry transmission of physiological and portable life support system performance data, and an audible warning signal.

A remote control unit, attached to the suit chest area, contained the portable life support system water pump and fan switches, a four-position communications mode selector switch, dual radio volume controls, a push-to-talk switch, an oxygen quantity gage, five warning indicators, the mounting for an oxygen purge system actuator, and brackets for mounting cameras. Each portable life support system could be recharged from expendables carried on board the lunar module. The expendables were oxygen, water, batteries, and lithium hydroxide cartridges. When fully charged, the portable life support system, control unit, and oxygen purge system weighed 135 earth pounds.

The portable life support system was originally designed for 4 hours of use at a metabolic rate of 930 Btu/hr. The system designed to meet those requirements used only gas ventilation for cooling. Extravehicular activity experience from the Gemini program showed that the metabolic rates were higher than expected and that gas cooling was inadequate. The portable life support system was redesigned to provide liquid cooling through a liquid-cooled garment (fig. 4-27) to handle the higher metabolic rates.

The liquid-cooling design was used during all Apollo extravehicular activities and proved to be extremely successful. The portable life support system was flight tested on the Apollo 9 mission and, for the first time, a man's life was sustained by a completely portable environmental control system. Based on the success of the Apollo 9 mission, the decision was made to perform extravehicular activities outside the spacecraft with two crewmen on the lunar surface. Originally, one crewman was to remain in the spacecraft while the other collected lunar samples. The change in requirements necessitated replacing the communications system in the portable life support system with a unit that would allow the transmission of voice and telemetry data from both crewmen simultaneously. The Apollo 9 portable life support system configuration did not have this capability. The addition of the extravehicular communications system was the only major change between the portable life support system used on the Apollo 9 mission and that used on the Apollo 11 mission.

The system, as used on the Apollo 11, 12, and 14 missions, was capable of providing life support for 4 hours and could be recharged from the lunar module to support two two-man extravehicular activity periods. The portable life support system was changed to accommodate three two-man extravehicular activity periods of 7 hours duration each for the Apollo 15, 16, and 17 missions. In addition to increasing the consumables capability, the portable life support system water diverter valve (temperature controller) was changed so that the crewmen would not be excessively cooled during low-activity periods.

4.10.1.3 Oxygen purge system.- Three emergency oxygen systems were developed during the Apollo program. The first and second configurations, called the emergency oxygen system, were extremely simple and performed identical functions. Both units provided for 5 minutes of emergency flow at a rate of 2 pounds per hour.

The mission requirements were reviewed and revised in mid-1967 to provide additional emergency oxygen and to permit extravehicular excursions to distances from the lunar module that were greater than previously planned. The oxygen purge system (fig. 4-29) designed for the new requirements, performed the same function as the emergency oxygen system; however, the oxygen purge system provided a minimum of 30 minutes of flow at a rate of 8 pounds per hour (for increased metabolic heat rejection) and permitted the extension of the safe extravehicular activity range. The rate of flow was determined by a purge valve located on the pressure garment assembly. A full-open valve position created an 8-pound-per-hour deliberate "leak" in the system; a second valve setting created a 4-pound-per-hour flow that could be used to conserve oxygen and to provide at least 1 hour of emergency "get back" capability when the buddy secondary life support system was used to provide the majority of heat removal.

The original oxygen purge system, as flown on the Apollo 9 mission, incorporated a heater to preheat the gas introduced to the regulator and to maintain the temperature of the gas delivered to the suit above 30° F. Subsequent testing indicated that flow, pressure regulation, and thermal comfort could be maintained without the oxygen purge system heater. Therefore, the heater was deleted for Apollo 11 and subsequent missions. The only other oxygen purge system change was the addition of hardware required for "helmet mounting" the system for transearth extravehicular activities.

4.10.1.4 Buddy secondary life support system.- The buddy secondary life support system (fig. 4-30) was designed as an emergency system to permit a crewman whose portable life support system was not cooling properly to share the cooling system of his companion's portable life support system. The addition of the buddy secondary life support system allowed the crewmen to travel farther from the lunar module during extravehicular activities than they otherwise could have. The system was made up of two hoses protected by a single thermal insulation cover. A connector divided the cooling water of one portable life support system between both crewmen. If the oxygen purge system had been required for use, the buddy secondary life support system would at least have doubled the time allowed for return to the lunar module because the oxygen purge system would not have been needed for cooling and could have supplied oxygen at a slower rate.

4.10.1.5 Transearth extravehicular system.- The requirements for the extravehicular mobility unit were different for non-lunar-surface extravehicular activity operations; consequently, changes were made to the unit for these operations.

The transearth extravehicular system was designed and configured for operation in zero gravity in free space. The system included a command module suit, an extravehicular visor, gloves, a constant-wear garment, a urine collection and transfer assembly, bioinstrumentation, an oxygen purge system, and a purge valve. These items were used during the Apollo 15, 16, and 17 missions when film magazines were retrieved from the scientific instrument module bay. Special requirements for the system included modifying the command module and suit oxygen and electrical subsystems.

The command module modifications included the following provision.

a. A gaseous oxygen supply through an umbilical

b. An electrical cable that transferred communications and special warnings (low ventilation oxygen flow and low suit pressure)

c. A braided interlocking tether designed into the umbilical as a restraining device and attached to the vehicle and to the crewman for safety

The suit modifications included the following.

a. Addition of a pressure control valve that regulated the suit pressure in conjunction with the umbilical oxygen supply

b. Remounting of the secondary oxygen system (one of the oxygen purge systems retained from lunar surface operation)

During development of the system, cooling from an open-loop oxygen system was determined to be sufficient because of the low metabolic rates required.

### 4.10.2 Crew Station Configuration and Equipment

The crew station included such items as displays, controls, supports, restraints, and stowage areas. The specific items considered as crew equipment were also extremely diverse. This equipment consisted of such items as flight garments, accessories, medical and bioinstrumentation components, survival equipment, and docking aids. Many of these items are discussed elsewhere in this report; therefore, the discussion here is limited to only general aspects.

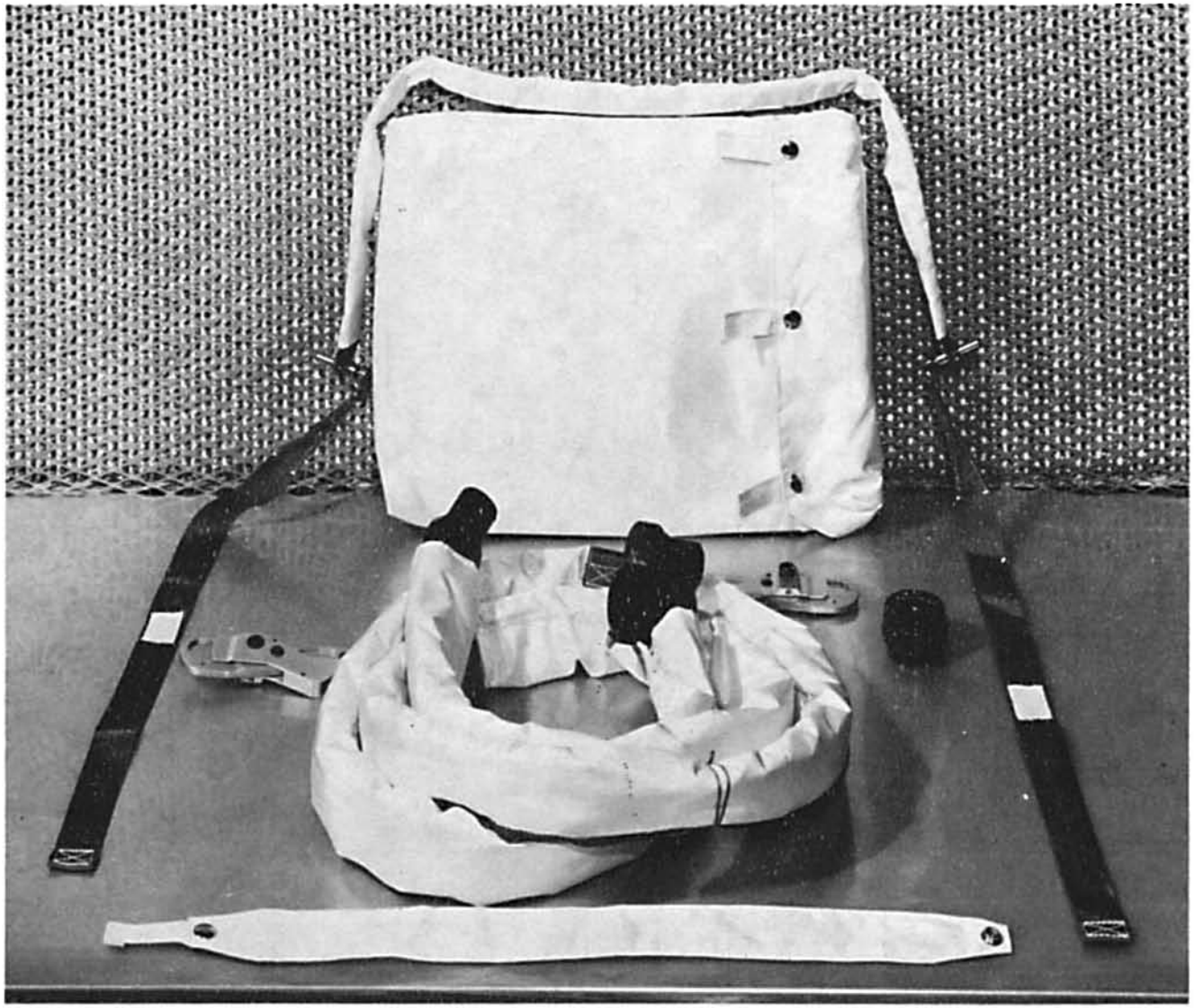

Figure 4-30.- Buddy secondary life support system.

4.10.2.1 Command module crew station and equipment.- Figure 4-31 shows the general arrangement of the command module crew station. Changes and additions to the crew station and crew equipment were continuous throughout the Apollo program. The development of the couch, restraint and impact attenuation systems are discussed in section 4.4.4. The development of displays and controls are discussed in section 4.4.10. The problems associated with the development of the crew equipment items were discovered from use and comments by crewmen. Prior to the approval of a design for flight, the items were subjected to hardware design reviews, bench evaluations, mockup evaluations, zero-gravity water tests, high-fidelity fit and function tests, and, finally, manned-chamber evaluation under simulated altitude conditions. During the early crew interface tests, the design remained fluid and changed, as required, with each review.

Crew equipment engineers learned to remain closely involved with the equipment from the time of initial design concept until completion of the postflight analysis. After the Apollo I fire, it became mandatory to make spacecraft cabin materials less flammable. This new emphasis completely changed the design philosophy of the crew equipment. The design process began with new ground rules and new restrictions that required the use of nonflammable materials.

As experience increased, changes to the equipment decreased. Designers were better able to anticipate the requirements of the Apollo missions. Eventually, a point of minimum change and maximum efficiency was attained, this being a fine blend of design intuition and crewman participation in the development effort.

As the program advanced, additional mission activities included wide-ranging scientific endeavors. This change was reflected into the crew station/crew equipment systems. For example, the addition of the scientific instrument module bay in the service module resulted in the requirement for transearth extravehicular activities. Film magazine retrieval was accomplished through crewman extravehicular activity via side-hatch egress and body translation to and from the scientific instrument module bay. The crewman was aided in this endeavor by equipment such as restraints, tethers and umbilicals.

Stowage items used most during a mission (clothing, food, bags, etc.) received prime consideration with respect to optimum stowage locations. Stowage volumes were made as uniform as the vehicle configuration would allow and common mounting designs were utilized. Every effort was made to understand the crew station environments during launch, orbit, return, and ground handling activities because stowage designs based on unrealistic design loads have proven to be troublesome. Except for a very few unique situations, return stowage did not present a problem. Since the couch stroking envelope for a water-landing was much less than for a land-landing, the amount of available stowage volume was adequate for return items.

It became obvious as Apollo neared the end of the program that certain stowage concepts were proven from both an operational and budgetary standpoint. Specifically, the basic concepts were:

a. Provide specific stowage locations and arrangements for all items of loose equipment, to be determined based on mission time lines and crew operational requirements.

b. Provide individual structural restraints for high density and fragile items to preclude stowed items from being supported by other stowed items.

c. Provide individual zero-gravity restraints for all stowed loose equipment in such a way that any one item can be removed without adjacent loose equipment floating away.

d. Utilize stowage provisions (bags, cushions, brackets, and straps) as required to prevent contact of the equipment to the metal stowage lockers, thus meeting vibration and shock protection requirements.

e. All materials that support combustion must be stowed in a closed metal locker or inside a double layer of fiberglass material (Beta cloth) containers. Also, these materials cannot be stowed near potential ignition sources even though they are in metal lockers or Beta cloth containers.

f. Clearances must be maintained outside the couch loading (stroking) envelope for land-landing pad abort and water-landing return. Some exceptions can be allowed if the material is crushable, (i.e., liquid cooling garment, some food items, etc.).

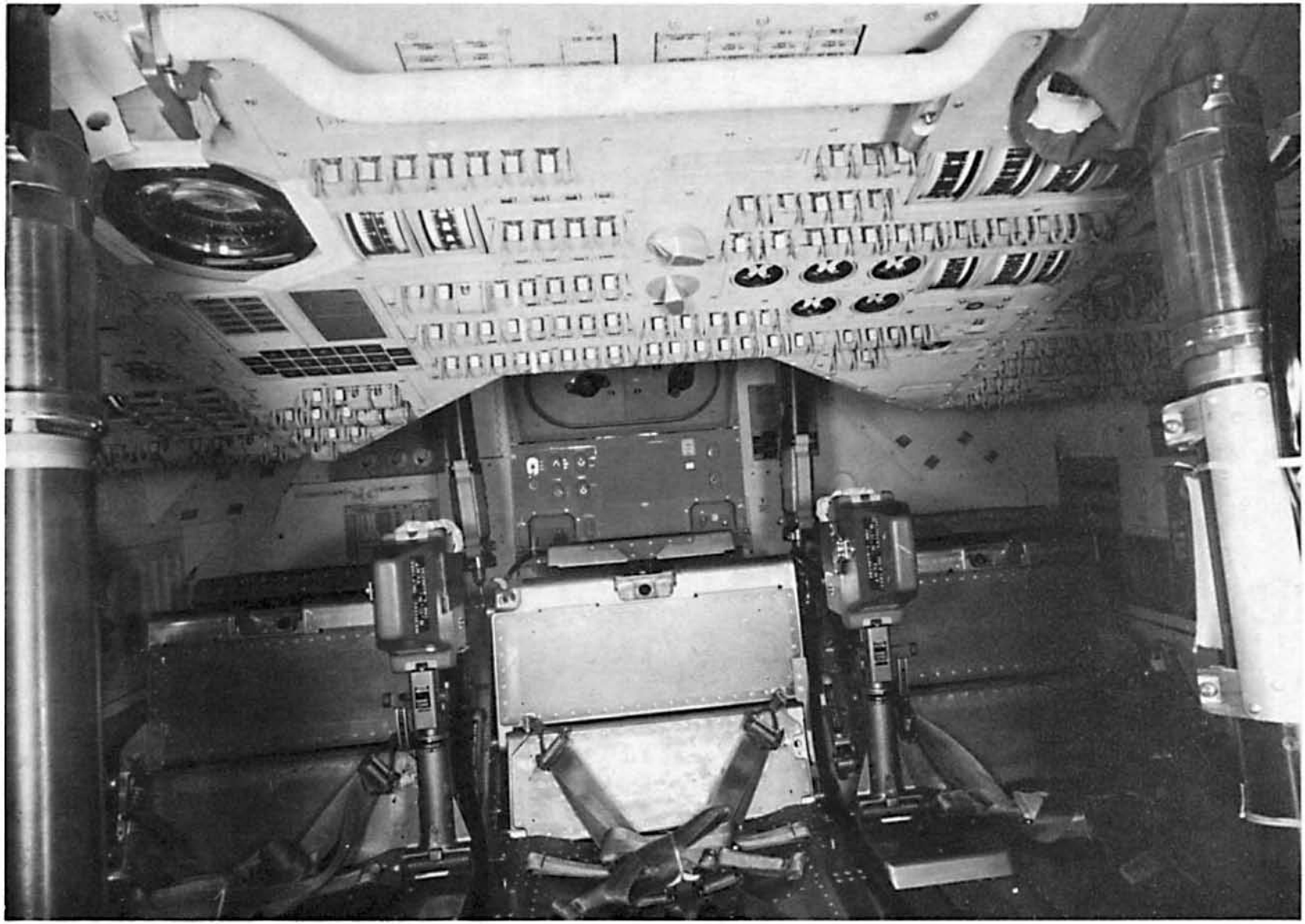

Figure 4-31.- Command module interior view, looking through side hatch.

High fidelity mockups and trainers were invaluable in evaluating stowage configurations. They were also used continuously by many other Manned Spacecraft Center elements to develop procedures, equipment modifications, and to demonstrate new concepts. Any program in the future should be well equipped with this type of hardware and every effort should be made to keep it current through all phases of the program.

Additional information on command module crew provisions and equipment is contained in reference 4-82. Stowage is discussed in references 4-82 and 4-83.

4.10.2.2 Lunar module crew station and equipment.- A number of lunar module crew station and equipment configurations were developed as earth orbit experience from previous programs and analysis of lunar gravity and acceleration profiles were introduced.

Initially, conventional crew seating at the controls was provided in the early lunar module concept. This concept was changed in favor of the crew standing at the control station. Acceleration loads less than one-g during lunar descent and ascent on the crewmen allowed minimal body restraints, thus providing the capability of crew viewing out the windows along the module thrust axis with minimum window area (fig. 4-32).

Operational procedures developed in full-scale mockups provided insight in problem areas of crew mobility in pressurized suits. Egress and ingress through the forward hatch proved to be a laborious task while pressurized. As a result, the forward hatch was modified and enlarged, and the docking procedure was changed from using either the forward or top hatch to using the top hatch only.

For the first manned lunar landing, cabin stowage was limited to equipment necessary to support life, lunar sample containers, and photography equipment. A modular pallet in one sector of the descent stage contained some equipment to be deployed by the crew in addition to television for the historic first step onto the lunar surface. After return of the Apollo 11 crew, specific vehicle and equipment changes were identified. Sleeping hammocks were added, additional cameras and film were provided, and lunar surface equipment was changed and increased to provide for more efficient operation.

The retrieval of Surveyor III components on the Apollo 12 mission required the development of special tubing cutters, wire cutters, sampling methods, safety lines, and equipment necessary for expanded scientific operations. In conjunction with the Surveyor hardware retrieval, lunar samples were gathered, and scientific lunar experiments were deployed.

After the Apollo 12 mission, it became evident that no two lunar landing missions were going to be alike. Therefore, the crew station for each succeeding vehicle was custom designed. Stowage, both internal and external to the cabin, became more complex to facilitate handling of the increased quantity of equipment required to accomplish the mission objectives.

The Apollo 13 lunar module was configured for the maximum lunar stay time (2 days) of the H-series missions. When this spacecraft became the life support system for a circumlunar flight, it brought the crew safely to the point where command module entry was assured.

The lunar module configuration was revised, beginning with the Apollo 15 vehicle, to provide capability for the longer duration J-series missions. The cabin stowage concept was changed to a semi-modularized configuration to allow more flexibility of loading. The descent stage modular equipment stowage assembly was enlarged to carry more equipment, and potential growth capability was provided, which became of great value later in providing stowage space for new mission equipment with a minimum expenditure of funds. In addition, stowage pallets were added to quadrant III of the descent stage to carry the large scientific payloads being identified. The lunar roving vehicle, which also required a stowage interface on the lunar module, was being designed in parallel.

All these changes were identified and a detailed design was initiated using the experience gained on previous lunar missions. For the first time, on the J-series spacecraft, allowance was made in the design of the crew station and the exterior crew-operated stowage areas for expected programmatic changes. Indeed, the full capability of the lunar module was used for the final three missions.

Additional information on stowage may be found in references 4-82 and 4-83.

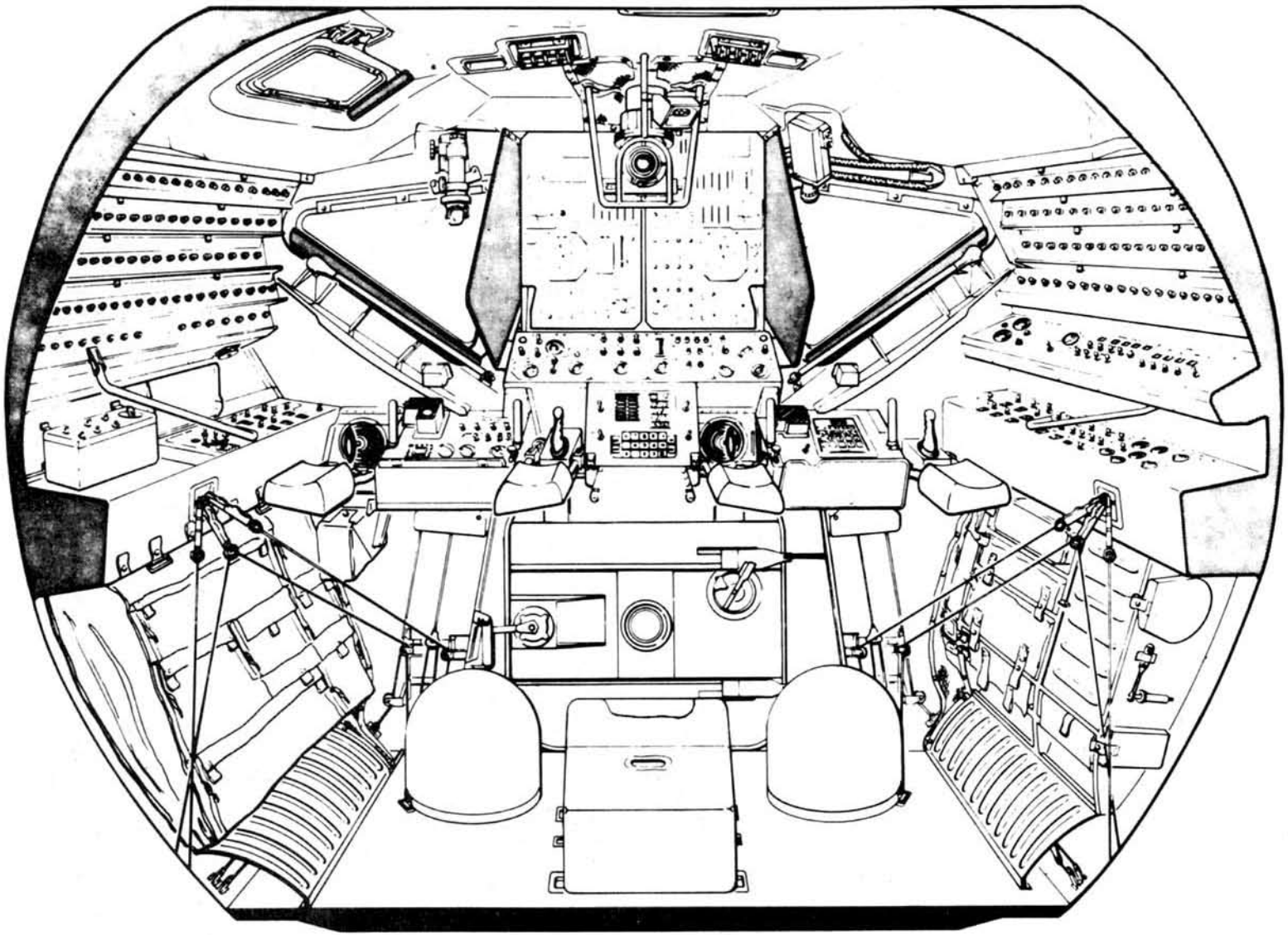

Figure 4-32.- Lunar module ascent stage interior view, looking forward.

## 4.11 REFERENCES


4-1. Postlaunch Memorandum Report for Apollo Pad Abort I. NASA Johnson Space Center Report (unnumbered), Nov. 13, 1963.

4-2. Postlaunch Report for Apollo Mission A-001. NASA Johnson Space Center Report MSC-R-A-64-1, May 28, 1964.

4-3. Postlaunch Report for Apollo Mission A-101. NASA Johnson Space Center Report MSC-R-A-64-2, June 18, 1964.

4-4. Postlaunch Report for Apollo Mission A-102. NASA Johnson Space Center Report MSC-R-A-64-3, Oct. 10, 1964.

4-5. Postlaunch Report for Apollo Mission A-002. NASA Johnson Space Center Report MSC-R-A-65-1, Jan. 22, 1965.

4-6. Postlaunch Report for Apollo Mission A-003. NASA Johnson Space Center Report MSC-A-R-65-2, June 28, 1965.

4-7. Postlaunch Report for Apollo Mission PA-2. NASA Johnson Space Center Report MSC-A-R-65-3, July 29, 1965.

4-8. Postlaunch Report for Apollo Mission A-004. NASA Johnson Space Center Report MSC-A-R-66-3, April 15, 1966.

4-9. Postlaunch Report for Mission AS-201. NASA Johnson Space Center Report MSC-A-R-66-4, May 6, 1966.

4-10. Postlaunch Report for Mission AS-202. NASA Johnson Space Center Report MSC-A-R-66-5, Oct. 12, 1966.

4-11. Apollo 4 Mission Report. NASA Johnson Space Center Report MSC-PA-R-68-1, Jan. 7, 1968.

4-12. Apollo 6 Mission Report. NASA Johnson Space Center Report MSC-PA-R-68-9, June 1968.

4-13. Apollo 7 Mission Report. NASA Johnson Space Center Report MSC-PA-R-68-15, December 1968.

4-14. Apollo 8 Mission Report. NASA Johnson Space Center Report MSC-PA-R-69-1, February 1969.

4-15. Apollo 9 Mission Report. NASA Johnson Space Center Report MSC-PA-R-69-2, May 1969.

4-16. Apollo 10 Mission Report. NASA Johnson Space Center Report MSC-00126, August 1969.

4-17. Apollo 11 Mission Report. NASA Johnson Space Center Report MSC-00171, November 1969.

4-18. Apollo 12 Mission Report. NASA Johnson Space Center Report MSC-01855, March 1970.

4-19. Apollo 13 Mission Report. NASA Johnson Space Center Report MSC-02680, September 1970.

4-20. Apollo 14 Mission Report. NASA Johnson Space Center Report MSC-04112, May 1971.

4-21. Apollo 15 Mission Report. NASA Johnson Space Center Report MSC-05161, December 1971.

4-22. Apollo 16 Mission Report. NASA Johnson Space Center Report MSC-07230, August 1972.

4-23. Apollo 17 Mission Report. NASA Johnson Space Center Report JSC-07904, March 1973.

4-24. Smith, P. D.: Apollo Structure Subsystem. Apollo Experience Report, NASA TN D-7780, September 1974.

4-25. Dotts, R. L.: Spacecraft Heating Environment and Thermal Protection for Launch Through the Atmosphere of the Earth. Apollo Experience Report, NASA TN D-6085, July 1972.

4-26. Pavlosky, J. E., and St. Leger, L. G.: Apollo Thermal Protection Subsystem. Apollo Experience Report, NASA TN D-7564, January 1974.

4-27. West, R. B.: The Apollo Earth Landing System. Apollo Experience Report, NASA TN D-7437, September 1973.

4-28. Arabian, D. D., and Mechelay, J. E.: Apollo 15 Main Parachute Failure. 7th Aerospace Mechanisms Symposium, NASA TM X-58106, November 1972.

4-29. Langley, R. D.: The Docking System. Apollo Experience Report, NASA TN D-6854, March 1972.

4-30. Langley, R. D.: The Apollo 14 Docking Anomaly. 7th Aerospace Mechanisms Symposium, NASA TM X-58106, November 1972.

4-31. Drexel, R. E., and Hunter, H. N.: Command Module Crew Couch/Restraint System and Load Attenuation System. Apollo Experience Report, NASA TN D-7440, September 1973.

4-32. White, R. D.: Command Module Uprighting System. Apollo Experience Report, NASA TN D-7081, April 1972.

4-33. Walkover, L. J.; Hart, R. J.; and Zosky, E. W.: Apollo Command Module Side Access Hatch System. 4th Aerospace Mechanisms Symposium, NASA JPL TM 33-425, 1970.

4-34. Chandler, W. A., Rice, R. R., and Allgeier, R. K.: Cryogenic Storage System. Apollo Experience Report, NASA TN D-7288, June 1973.

4-35. Bell, D. III, and Plauche, F. M.: Power Generation System. Apollo Experience Report, NASA TN D-7142, March 1973.

4-36. Trout, J. B.: Battery Subsystem Experience. Apollo Experience Report, NASA TN D-6976, September 1972.

4-37. Munford, R. E., and Hendrix, B.: Command and Service Module Electrical Power Distribution System. Apollo Experience Report, NASA TN D-7609, March 1974.

4-38. Gibson, C. R., and Wood, J. A.: Service Propulsion Subsystem. Apollo Experience Report, NASA TN D-7375, August 1973.

4-39. Taeuber, R. J., and Weary, D. P.: Command and Service Module Reaction Control System. Apollo Experience Report, NASA TN D-7151, June 1973.

*4-40. Wilson, R. E.: Guidance and Control Systems. Apollo Experience Report.

*4-41. Holley, M. D.: Primary Guidance, Navigation and Control Systems Development. Apollo Experience Report.

4-42. Cox, K. J., and Peters, W. H.: Apollo Digital Autopilot Design and Development. Apollo Experience Report, NASA TN D-7289, June 1973.

4-43. Gilbert, D. W.: Engineering Simulation Program. Apollo Experience Report, NASA TN D-7287, June 1973.

4-44. Littleton, O. P.: Command and Service Module Stabilization and Control System. Apollo Experience Report, NASA TN D-7785, September 1974.

*4-45. McMahon, W. A.: Command and Service Module Propulsion Gimbal Actuators. Apollo Experience Report.

4-46. Reina, B.: Command and Service Module Entry Monitor System. Apollo Experience Report. TN D-7859, Jan. 1975.

*These reports are being processed for publication in NASA TN D series.

4-47. Parker, R. B., and Sollock, P. E.: Orbital Rate Drive Electronics. Apollo Experience Report, NASA TN D-7784, September 1974.

*4-48. Holloway, G. F.: Automated Control System for Unmanned Mission AS-201. Apollo Experience Report.

*4-49. Holloway, G. F.: Mission Control Programmer for Unmanned Missions AS-202, Apollo 4 and Apollo 6. Apollo Experience Report.

4-50. Thermal Design and Performance of the Apollo Block II ECS Radiators. NASA Johnson Space Center Report MSC-06949.

4-51. Tucker, E., and Samonski, F. H., Jr.: Command and Service Module Environmental Control System. Apollo Experience Report, NASA TN D-6718, March 1972.

4-52. Ellis, W. E., and Blakemore, T. L.: Considerations Toward the Selection of a Ground Checkout and Launch Atmosphere for the Apollo Command Module. NASA Johnson Space Center Working Paper 1343, November 1971.

*4-53. Olsen, A. B., Jr., and Swint, R. J.: Command and Service Module Displays and Controls Subsystem. Apollo Experience Report.

4-54. Lattier, E. E.: Apollo Command and Service Module Communications Subsystem. Apollo Experience Report, NASA TN D-7585, February 1974.

4-55. Dabbs, J. H., and Schmidt, O. L.: Voice Communications Techniques and Performance. Apollo Experience Report, NASA TN D-6739, March 1972.

4-56. Travis, D. A., and Royston, C. L.: Communications System Flight Evaluation and Verification. Apollo Experience Report, NASA TN D-6852, June 1972.

4-57. Rotramel, F. A.: Command and Service Module Instrumentation Subsystem. Apollo Experience Report, NASA TN D-7374, August 1973.

4-58. Apollo 5 Mission Report. NASA Johnson Space Center Report MSC-PA-R-68-7, Mar. 27, 1968.

4-59. Johnson, R. E.: The Problem of Stress Corrosion Cracking. Apollo Experience Report, NASA TN D-7111, March 1973.

4-60. Weiss, S. P.: Lunar Module Structural Subsystem. Apollo Experience Report, NASA TN D-7084, March 1973.

4-61. Rogers, W. F.: Lunar Module Landing Gear Subsystem. Apollo Experience Report, NASA TN D-6850, June 1972.

4-62. Campos, A. B: Lunar Module Electrical Power Subsystem. Apollo Experience Report, NASA TN D-6977, September 1972.

4-63. Hammock, W. R., Jr.; Currie, E. C.; and Fisher, A. E.: Descent Propulsion System. Apollo Experience Report, NASA TN D-7143, March 1973.

4-64. Humphries, C. E., and Taylor, R. E.: Ascent Propulsion System. Apollo Experience Report, NASA TN D-7082, March 1973.

4-65. Vaughan, C. A.; Villemarette, R.; Karakulko, W.; and Blevins, D. R.: Lunar Module Reaction Control System. Apollo Experience Report, NASA TN D-6740, March 1972.

*4-66. Shelton, D. H.: Lunar Module Stabilization and Control System. Apollo Experience Report.

*4-67. Kurten, P. M.: Lunar Module Abort Guidance System. Apollo Experience Report.

*These reports are being processed for publication in NASA TN D series.

4-68. Gillen, R. J.; Brady, J. C.; and Collier, F.: Lunar Module Environmental Control Subsystem. Apollo Experience Report, NASA TN D-6724, March 1972.

4-69. Farkas, A. J.: Lunar Module Display and Control Subsystem. Apollo Experience Report, NASA TN D-6722, March 1972.

4-70. Dietz, R. H.; Rhoades, D. E; and Davidson, L. J.: Lunar Module Communications System. Apollo Experience Report, NASA TN D-6974, September 1972.

4-71. Rosenberg, H. R. (ed.): S-Band System Signal Design and Analysis. Apollo Experience Report, NASA TN D-6723, March 1972.

4-72. Panter, W. C.: Very-High-Frequency Ranging System. Apollo Experience Report, NASA TN D-6851, June 1972.

4-73. Ohnesorge, T. E.: Electronic Systems Test Program Accomplishment and Results. Apollo Experience Report, NASA TN D-6720, March 1972.

4-74. Rozas, P., and Cunningham, A. R.: Lunar Module Landing Radar and Rendezvous Radar. Apollo Experience Report, NASA TN D-6849, June 1972.

4-75. O'Brien, D. E. III, and Woodfill, J. R. IV: Lunar Module Instrumentation Subsystem. Apollo Experience Report, NASA TN D-6845, June 1972.

*4-76. White, L. D.: Electrical Wiring Subsystem. Apollo Experience Report.

4-77. Falbo, M. J., and Robinson, R. L.: Spacecraft Pyrotechnic Systems. Apollo Experience Report, NASA TN D-7141, March 1973.

*4-78. Johnson, G. W.: Sequential Events Control Subsystem. Apollo Experience Report.

4-79. Farmer, N. B.: Apollo Development Flight Instrumentation Program. Apollo Experience Report, NASA TN D-7598, March 1974.

4-80. Ecord, G. M.: Pressure Vessels. Apollo Experience Report, NASA TN D-6975, Sept. 1972.

4-81. Coan, P. P.: Apollo Television System. Apollo Experience Report, NASA TN D-7476, November 1973.

4-82. McAllister, F. A.: Crew Provisions and Equipment Subsystem. Apollo Experience Report, NASA TN D-6737, March 1972.

4-83. Hix, M. W.: Apollo Stowage and Support Team Concept. Apollo Experience Report, NASA TN D-7434, September 1973.

*These reports are being processed for publication in NASA TN D series.

# 5.0 SPACECRAFT DEVELOPMENT TESTING

## 5.1 INTRODUCTION

The development of the Apollo spacecraft and associated flight equipment required extensive testing. A large part of the command and service module and the lunar module testing, especially at higher levels of assembly, was conducted at the White Sands Test Facility and the Manned Spacecraft Center.

## 5.2 WHITE SANDS TEST FACILITY

The White Sands Test Facility operates as an element of the Manned Spacecraft Center and is devoted to propulsion and power systems development and certification testing, and special testing of materials, components, and subsystems used with propellants or other hazardous fluids or environments. The facility has five operational propulsion test stands located in two separate areas. Three of the stands have altitude simulation capabilities (up to approximately 140 000 feet for 12 000-pound-thrust engines). Each test stand is essentially self-contained and is separately maintained and controlled.

Testing accomplished at the White Sands Test Facility consisted of integrated systems ground testing of the following service module and lunar module systems:

| Service Module | Lunar Module |
|---|---|
| Service propulsion system | Ascent propulsion system |
| Reaction control system | Descent propulsion system |
| Electrical power system (fuel cells and cryogenic storage subsystem) | Reaction control system |

Screening of a wide variety of Apollo program materials for ignition and combustion hazards, toxicity, and odor outgassing required the development of new "standardized" test methods and test devices. The White Sands Test Facility took the lead in developing these tests and, as a result, has become an "industry-standard" test agency for this type of testing. Standard tests now capable of being performed at the White Sands Test Facility satisfy all of the requirements as specified by NASA Handbook 8060.1 "Flammability, Odor and Offgassing Requirements, and Test Procedures for Materials in Environments that Support Combustion." The testing includes combustion propagation rate tests, thermogravimetric analysis, flash point and fire point determination, offgassed and combustion products analysis, odor evaluations, mechanical and pneumatic impact ignition sensitivity tests, and vacuum stability tests. Tests can be performed in gaseous and liquid oxygen, in hydrogen, and in earth storable propellants.

## 5.3 MANNED SPACECRAFT CENTER

Testing accomplished at the Manned Spacecraft Center included vibration, acoustic, and thermal-vacuum tests of the command and service module and the lunar module; water- and land-landing impact tests of the command module; and lunar landing impact tests of the lunar module. Command module and lunar module docking simulations were performed as well as modal surveys of the docked configuration. Numerous other tests at various levels of assembly were also conducted on Apollo program hardware. These tests are documented in summary form in references 5-1, 5-2 and 5-3. A description of the test facilities used in this testing can be found in reference 5-4.

## 5.4 REFERENCES

5-1. Major Test Accomplishments of the Engineering and Development Directorate - 1968, MSC-00121, April 1969.

5-2. Major Test Accomplishments of the Engineering and Development Directorate - 1969, MSC-02531, June 1969.

5-3. Major Test Accomplishments of the Engineering and Development Directorate, MSC-07194, August 1972.

5-4. Major Test Facilities of the Engineering and Development Directorate, MSC-03415, October 1970.

# 6.0 FLIGHT CREW SUMMARY

Considering the available resources and the time spacing for launches, each Apollo mission represented a considerable increase in sophistication and complexity from the standpoint of crew performance. The mission reports (refs. 6-1 to 6-11) for 11 manned missions show a continual improvement in flight crew performance. This improvement was possible because each mission supported the next one with a wealth of pertinent crew experience. The increased complexity in the objectives of each mission was possible, in part, because new operational experience was used where appropriate to standardize and revise crew operations as each mission was flown, especially in the areas of preflight training, flight procedures, and equipment operation. This standardization allowed follow-on crews to concentrate on the development and execution of those flight phases which were new.

An important factor in the demonstrated success of each flight crew, especially in view of additional operational and scientific requirements for each mission, was the continually increasing effectiveness and validity of crew training, particularly training conducted in the mission simulators.

The 22 three-man flight crews (primary and backup) assigned for the 11 manned Apollo missions are listed in table 6-I. Thirty-two different astronauts received assignments to this team. Of 29 astronauts who flew Apollo missions, four flew two missions each. Twenty-four different crewmembers participated in the lunar missions, and 12 men landed on the lunar surface.

## 6.1 CREW REPORT

This section summarizes and presents an overview of the significant contributions and experiences of all crewmen during the flight program, particularly in areas where flight crew experience was used to improve performance for subsequent missions. Attention is directed primarily to lessons learned, both in flight and on the lunar surface.

### 6.1.1 Training

Training for the early manned flights (Apollo 7 through 10) leading to the first lunar landing concentrated on continuous in-depth reviews of the command and service module and lunar module systems, with major crew participation in nearly every phase of spacecraft test and checkout. This involvement was necessary because total vehicle systems performance, both for normal and abort operations, was neither well understood nor well documented. Preflight training usually began with the checkout, integration, and verification of the command and service module and lunar module simulators because the availability and effectiveness of these simulators was a major crew concern. In every case, however, the simulators supported each mission effectively and provided the most valuable crew training for the dynamic phases of the mission for spacecraft system operating procedures and for simulations of integrated time-line activity with the flight controllers in the Mission Control Center.

Crews participated only in major spacecraft test and checkout activities during training for the lunar landing missions and devoted proportionately more time to training on new scientific mission activities with the attendant development of new procedures and checklists. Much wider use was made of such specialized training devices and techniques as the lunar landing training vehicle (fig. 6-1), high-fidelity stowage mockups, 1/6-earth-gravity and zero-g aircraft training flights, the zero-g water tank, and suited training for the lunar surface and transearth extravehicular activity phases. The increasing effectiveness of standardized crew training for operational mission aspects, the continuous addition of crew experience, and the greater spacing between launches permitted the crews of the later science-oriented missions to devote 30 to 40 percent of their time to the development of, and training for, lunar orbital and lunar surface science procedures. The effectiveness of the standardized training program was dramatically demonstrated during the aborted Apollo 13 flight. Furthermore, mission results showed that substituting the backup Apollo 13 Command Module Pilot for the prime crew Pilot 2 days before flight was practical and effective, even under conditions of stress.

TABLE 6-I.- APOLLO FLIGHT CREW ASSIGNMENTS

| Apollo mission | Prime crew (a) | Backup crew (a) |
|---|---|---|
| 7 | Walter M. Schirra, Jr.<br>Donn F. Eisele<br>R. Walter Cunningham | Thomas P. Stafford<br>John W. Young<br>Eugene A. Cernan |
| 8 | Frank Borman<br>James A. Lovell, Jr.<br>William A. Anders | Neil A. Armstrong<br>Edwin E. Aldrin, Jr.<br>Fred W. Haise, Jr. |
| 9 | James A. McDivitt<br>David R. Scott<br>Russell L. Schweickart | Charles Conrad, Jr.<br>Richard F. Gordon, Jr.<br>Alan L. Bean |
| 10 | Thomas P. Stafford<br>John W. Young<br>Eugene A. Cernan | L. Gordon Cooper, Jr.<br>Donn F. Eisele<br>Edgar D. Mitchell |
| 11 | Neil A. Armstrong<br>Michael Collins<br>Edwin E. Aldrin, Jr. | James A. Lovell, Jr.<br>William A. Anders<br>Fred W. Haise, Jr. |
| 12 | Charles Conrad, Jr.<br>Richard F. Gordon, Jr.<br>Alan L. Bean | David R. Scott<br>Alfred M. Worden<br>James B. Irwin |
| 13 | James A. Lovell, Jr.<br>[b]John L. Swigert, Jr.<br>Fred W. Haise, Jr. | John W. Young<br>Thomas K. Mattingly II<br>Charles M. Duke, Jr. |
| 14 | Alan B. Shepard, Jr.<br>Stuart A. Roosa<br>Edgar D. Mitchell | Eugene A. Cernan<br>Ronald E. Evans<br>Joe H. Engle |
| 15 | David R. Scott<br>Alfred M. Worden<br>James B. Irwin | Richard F. Gordon, Jr.<br>Vance D. Brand<br>Harrison H. Schmitt |
| 16 | John W. Young<br>Thomas K. Mattingly II<br>Charles M. Duke, Jr. | Fred W. Haise, Jr.<br>Stuart A. Roosa<br>Edgar D. Mitchell |
| 17 | Eugene A. Cernan<br>Ronald E. Evans<br>Harrison H. Schmitt | John W. Young<br>Stuart A. Roosa<br>Charles M. Duke |

[a]Listed in order of Commander, Command Module Pilot, and Lunar Module Pilot.

[b]Backup Command Module Pilot Swigert replaced prime crewman Mattingly 2 days before flight.

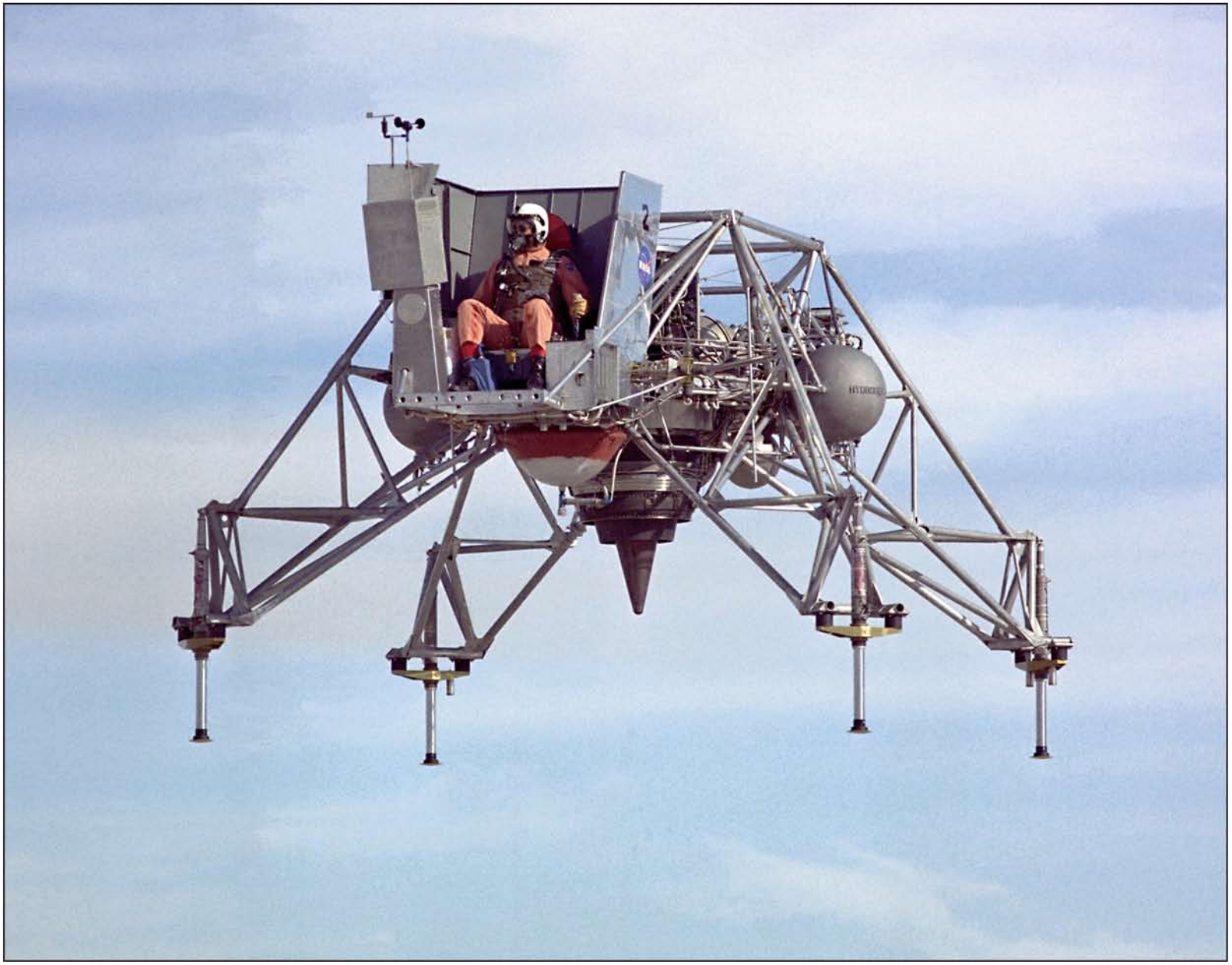

Figure 6-1.- Lunar landing training vehicle.

### 6.1.2 Mission Experience

6.1.2.1 Launch through docking.- The crew and the spacecraft test team were normally 10 to 20 minutes ahead of the final countdown for all missions. The Apollo 7 crew, launched on a Saturn IB, reported an uneventful launch phase. However, all crews launched aboard a Saturn V reported varying degrees of first-stage vibration and noise from lift-off through the region of maximum dynamic pressure. The most unusual first-stage experience was the Apollo 12 lightning strike, which caused the loss of onboard backup booster control capability.

Beginning with the Apollo 10 mission, all crews noted the rapid fore-and-aft longitudinal oscillations occurring at S-IC shutdown, and several crews commented on small longitudinal vibrations in the latter portion of S-II stage flight. On the Apollo 13 mission, S-II center engine shutdown was approximately 2 minutes early, but adequate compensation was made through outboard engine and S-IVB stage performance. Positive suppression of S-II longitudinal oscillations was incorporated on later vehicles. Several crews commented on a small high-frequency S-IVB vibration, which was attributed to valve chatter and which was not really objectionable.

Except for a temporary loss of inertial reference on the Apollo 12 mission because of the lightning strike, the primary navigation system enabled the crew to monitor booster-steering performance throughout the launch phase and to confirm satisfactory orbit insertion conditions. During simulations for Apollo 10 and subsequent missions, all crews demonstrated a satisfactory backup capability for steering the booster, in the event of a Saturn platform failure, into an acceptable orbit using the independent command module inertial measurement unit. The flight-crew backup steering mode was included in the training program because a less precise orbit was preferable to a launch phase abort in case a launch vehicle platform failed.

An unexpected phenomenon reported by the Apollo 7 crew was the gravity-gradient effect on the command and service module when the perigee was between 90 and 120 miles. Similarly, the Apollo 9 crew reported that, in drifting flight, the longitudinal axis of the two docked spacecraft tended to align with the orbital plane with the lunar module closest to earth. This crew also reported that the autopilot was effective in rotating the spacecraft about any axis while holding attitude about all other axes. This feature later became a major factor in the accurate positioning of the spacecraft in lunar orbit for service module experiments, thus freeing the Command Module Pilot to perform other experiments and observations.

The Apollo 9 crew experienced the first of several instances of propellant valve closure in the reaction control system because of shock during launch or pyrotechnic firings. After the Apollo 9 mission, the standard crew procedure was to check all valve positions following any pyrotechnic system firings.

Although several different manual control techniques were used for transposition and docking, maximum use of the digital autopilot both in simulations and in flight proved to be the most satisfactory technique for frugal propellant usage. The Command Module Pilot executed the docking maneuver by manual activation of the reaction control thrusters in an attitude-hold mode and by aligning the two spacecraft optically with a sight in the command module and a target cross on the lunar module. As a result, docking misalignments never exceeded 5°, lateral velocities were generally less than one-tenth of a foot per second, and closing rates ranged from one-tenth to three-tenths of a foot per second. Six contacts of the probe and drogue were made during the Apollo 14 mission before docking was successfully achieved. The crew was unable to discover any obvious contamination or mechanical problems with the docking system, which later functioned properly during lunar orbit docking. Several crews reported that as many as three of the 12 docking latches showed lack of closure, thus requiring the latches to be manually recocked and triggered. A design improvement in the probe capture-latch mechanism was incorporated in the Apollo 15 and subsequent spacecraft to eliminate this problem.

The Apollo 9 crew reported that the docking hardware and hatches could be removed from the tunnel in 5 to 7 minutes. Movement of large masses from the tunnel to a stowage position in the command module, such as the 84-pound tunnel hatch and the 80-pound probe, was found to be easy to control in zero gravity.

6.1.2.2 Translunar and transearth coast.- A passive thermal control mode was established for translunar and transearth coast, wherein the spacecraft was rotated about its longitudinal axis at a rate of 3 revolutions per hour. The attitude deadbands for the Apollo 8 spacecraft using this mode were quite restrictive; however, the procedures were modified for the Apollo 10 mission by opening the allowable deadbands. This change saved considerable reaction control system propellant, and the crew's sleep was not continually interrupted by thruster firings. On Apollo 12 and subsequent missions, an improved computer routine and revised crew procedures resulted in no thruster firings once the passive thermal control mode was initiated. When the spacecraft were in the docked configuration, all crews noted that small ripplelike oscillations were introduced into the spacecraft structure while the service module reaction control system thrusters were firing.

Star and horizon navigation sightings were made during the translunar phase of all lunar missions and during the transearth phase of all lunar landing missions through Apollo 14. On several flights, the auto-optics control mode would not position the star properly with respect to the sextant horizon fiduciary marks. When this deficiency occurred, the minimum-impulse controller was used to position the star on the horizon. Since the optical viewing axes were between the service module reaction control system roll and yaw thruster firing axes, this control mode was expensive in terms of both time and propellant.

The failure of cryogenic oxygen tank 2 during translunar coast on the Apollo 13 mission resulted in an abort of the lunar landing mission into a lunar flyby mission. This aborted mission required the use of the lunar module to supply power, oxygen, water, and attitude control. In addition, the lunar module descent propulsion system was used to place the docked combination into a free-return trajectory and to speed up the return to earth. The crew efficiently exercised onboard contingency procedures for fast powerup of the lunar module in preparation for the first descent propulsion firing. Also, following ground instructions, the crew used command module lithium hydroxide cartridges in the lunar module to remove carbon dioxide from both spacecraft. A manual descent propulsion midcourse correction was also conducted on the Apollo 13 mission using the cusps of the earth terminator in the optical alignment sight to align the docked configuration for a maneuver which corrected the entry angle. Before entry, the lunar module batteries were used to recharge the command module entry batteries while supplying power to the lunar module systems. The ability of the crew to handle the time-critical phases of this aborted mission demonstrated successful crew performance of complex tasks while under stress in a space environment.

6.1.2.3 Command and service module thrusting maneuvers.- The Apollo 7 crew verified the performance of the service propulsion system, including manual thrust-vector control, using the backup stabilization and control system, and minimum-impulse velocity changes. The Apollo 9 mission further verified service propulsion system performance, this time in the docked configuration where inflight bending response (stroking tests) and manual thrust-vector control were evaluated. After the Apollo 9 mission, there were more than 60 service propulsion maneuvers using the primary guidance and navigation system for thrust-vector control with excellent results. On each lunar mission, at least one translunar midcourse correction was made using the service propulsion system for a combined trajectory change maneuver and performance verification test.

Although service propulsion system maneuvers normally demanded the attention of the entire crew, the Command Module Pilots of Apollo 12 and subsequent missions performed them by themselves during lunar orbital solo operations. Such a maneuver normally requires, among other tasks, positioning 72 switches and circuit breakers. Major factors in the successful conduct of these maneuvers by only one crewman were the abbreviated checklist cards attached to the main display control panel and more intensive Command Module Pilot preflight training.

Once the inflight performance of the propellant utilization and gaging system was understood, crews had no trouble limiting fuel and oxidizer imbalance. Because of an open circuit in the secondary gimbal rate-feedback loop during the Apollo 16 mission, the lunar-orbit-circularization maneuver was delayed, causing a major change in the crew procedures and mission time line. As a result, onboard techniques for troubleshooting this kind of malfunction were incorporated in the Apollo 17 training.

The descent orbit insertion maneuver using the service propulsion system was initiated for the Apollo 14 mission to conserve lunar module propellant. Crew monitoring of this maneuver was critical because a 1-second overthrust could have placed the docked spacecraft in a moon-impacting trajectory. The crew, therefore, used an accurate prediction of firing duration from the Mission Control Center as the cue for a possible manual shutdown, thereby virtually eliminating the possibility of an unacceptable deorbit condition. The excellent performance of the service propulsion system in the minimum-impulse mode relegated the reaction control system to only the smaller velocity changes, such as orbit trim, lunar-orbit-phase ullage maneuvers, transearth midcourse corrections, and lunar module extraction and separation maneuvers.

6.1.2.4 Lunar module checkout.- The preliminary lunar module communications and telemetry checks and the stowage transfers were routinely made during translunar coast and in the initial phases of lunar orbit. In addition, several early entries were made into the lunar module because of ground instructions to verify systems performance, such as a systems verification check after the Apollo 12 lightning strike and a battery-data check on the Apollo 15 mission. These early entries were factors in the decision to make the entire preliminary lunar module checks earlier in a more leisurely phase of translunar coast to permit an early identification and collection of trend data on potential systems problems.

Activation of the lunar module was essentially an inflight operational checkout procedure. The Apollo 9 crew verified the lunar module powerup and checkout procedures in earth orbit. The Apollo 10 crew demonstrated these systems checkout activities in a period beginning 6 hours before undocking in lunar orbit. On several missions, because of various systems or procedural problems, crews were required to reverify checks or rearrange activities in real time to complete lunar module checkout on time. For example, during the Apollo 10 mission when the tunnel would not vent before undocking, the lunar module crewmen modified the hatch integrity check in real time. Also, the Apollo 12 crewmen modified their pressure suit donning sequence in real time to provide sufficient clearance at the lunar module navigation station for landmark tracking. Approximately 2 hours was deleted from the lunar module activation and checkout sequence during the Apollo 16 mission to shorten that workday to a more reasonable 22 hours. All lunar module systems were verified as satisfactory within the shortened time line, even with an S-band antenna failure (which required extensive manual updates to the computer), a double failure in one reaction control system, and several real-time revisions and repetitions of checkout procedures.

All crews reported that reaction control firings were much more audible in the lunar module than in the command module. Crews also reported hearing the sharp shotgunlike report made by the closure of the cabin repressurization valve, the glycol pump whine, the grinding of the S-band antenna, and several pyrotechnic firings. Although sometimes annoying, these noise cues were often helpful as indications of proper system functioning.

All Apollo crews required almost 10 minutes to vent the tunnel for the hatch integrity check before lunar module undocking. The Apollo 10 crew could not vent the tunnel for lunar module jettison. Because of the sharp pyrotechnic report at jettisoning, this crew recommended that future crews wear helmets and gloves to guard against a possible loss of cabin pressure caused by increased pyrotechnic shock with an unvented tunnel. As a result of this recommendation and because of a Soviet Soyuz accident in which cabin pressure was lost, the procedure was implemented for the Apollo 15 and subsequent crews.

6.1.2.5 Lunar module thrusting maneuvers.- Manual throttling of the descent propulsion system was first tested on the Apollo 9 mission in both the docked and undocked configurations. Manual control was used for the descent propulsion thrusting during descent orbit insertion for the Apollo 11 and 12 lunar missions and for the three descent engine firings of the Apollo 13 mission. Automatic throttle control and throttle-up were used during powered descent initiation for every landing mission except Apollo 14. The crews reported no vibrations except for a short period of roughness during the phasing maneuver throttle-up on the Apollo 9 mission. In 16 descent engine firings, the physiological cue of throttle operation was always noticeable. All lunar module crews commented on small lateral oscillations in the attitude control deadbands. These oscillations were attributed to propellant slosh. For all landings, the rate-of-descent throttle control mode was used to specify altitude rate. This control mode was easy to operate and allowed the Commander to concentrate on landing in the area of his choice.

Crew firing of the ascent engine was first performed on the Apollo 9 mission, and the system subsequently performed flawlessly in the automatic control mode during the 12 firings in the flight program. Considerable training time was spent in maintaining pilot proficiency in manually controlled ascent thrusting profiles using the rate-command attitude-hold, rate-command, and direct control modes. While the first two control modes, which were semimanual in operation, were quite practical, the latter, a completely manual mode, was very difficult to perform but was still preferable to the final alternative of being stranded on the lunar surface. Manual attitude control of the unstaged lunar module, using either the primary guidance system or abort guidance system, in the rate-command, pulse, or acceleration (direct) mode was responsive and precise. For example, the pulse mode was used to position stars in the one-power telescope in aligning the inertial platforms. Small star-angle measurement differences during these alignments proved the precision of this control mode technique.

The ascent stage thrusting maneuvers using the reaction control system were performed manually for the rendezvous maneuvers of concentric sequence initiation, constant differential height, terminal phase initiation, midcourse corrections, and final braking. The precision of this manual control technique was first noted during the Apollo 9 mission, and all crews commented on the control of the light ascent stage in response to the 100-pound thruster firings.

6.1.2.6 Lunar module landings.- For the Apollo 11 mission, visual checks by the lunar module crew showed the spacecraft to be 2 to 3 seconds early over known landmarks. After these checks, the lunar module was yawed to a faceup position approximately 4 minutes after powered descent initiation. For subsequent missions, powered descent was begun in the faceup position to accommodate S-band antenna acquisition and landing radar lockup. To maintain S-band antenna acquisition with earth during the Apollo 17 mission, various yaw angles of as much as 70° were used, but these angular shifts had only a slight effect on the crew's ability to monitor descent parameters.

For the Apollo 12 vehicle to land acceptably near the Surveyor site, all docked maneuvers were made using balanced thrust coupling, and a soft undocking was performed in a radial attitude with respect to the lunar surface. This procedure eliminated the possibility of orbital perturbations from reaction control maneuvers that could have compromised the accuracy of the state vector. After undocking, maneuvering was held to a minimum to avoid further affecting the established orbit. All crews after the Apollo 12 mission conscientiously followed this minimum-maneuver requirement, since the precision landing requirement became a factor in surface operations. The precision landing capability for these missions was further increased by permitting computer entries after powered descent initiation.

A series of alarms during the Apollo 11 descent indicated a computer overload which occasionally precluded computer monitoring of descent trajectory information. During the Apollo 14 mission, the landing radar circuit breaker had to be recycled to enable landing radar lockup. Neither of these unexpected procedural changes affected crew performance appreciably. At pitchover during the Apollo 11 descent, the crew prediction that the landing point was down range of the target location was confirmed. The Commander transferred from the automatic to the attitude-hold control mode to extend the range beyond a boulder field in which the automatic guidance program would have placed the vehicle. For Apollo 12 and subsequent missions, planned landmark recognition was instituted as soon after pitchover as possible so that manual redesignations of the landing site could be made to allow landing either near the target point or in a more suitably flat area.

The Apollo 11 crew reported that lunar surface dust began to move noticeably when the spacecraft was at an altitude of 100 feet and became increasingly dense as altitude decreased. The Apollo 12 crew noted dust motion at an altitude of 175 feet and reported that the surface was completely obscured at 50 feet. Dust was not detrimental to out-the-window visibility cues during the Apollo 14, 16, and 17 landings, but it completely obscured visibility from 60 feet to the surface during the Apollo 15 landing. The effect of dust on the Commander's ability to judge and control altitude, altitude rate, and lateral velocities was a function of such factors as the sun angle at landing, the cohesiveness of the surface regolith, and the presence of blocks or shadowed crater rims on the surface, which might be seen through the dust.

All lunar module crews noted that the lunar module simulator and the lunar landing training vehicle control system responses were representative of the flight hardware. The simulator and the training vehicle (figs. 6-1 and 6-2), together with the high fidelity of the visual landing and ascent television presentation, proved to be excellent training devices for the manually controlled final portion of the landing.

Commencing with the Apollo 15 mission, the angle of the final descent trajectory after pitchover was changed from 14° to 25°. This modification allowed for improved clearance over the Apennine Mountains and provided better visibility of the landing site after pitchover. For the Apollo 16 and 17 missions, the steeper descent angle permitted the crews to assess landing site targeting while still well above the nominal 7200-foot pitchover altitude. In training simulations, crews repeatedly demonstrated the ability to land safely using manual throttle, landing radar, and the abort (backup) guidance system from altitudes above 20 000 feet. In addition, by using the lunar module shadow on the surface as a descent altitude and altitude-rate indicator, crews demonstrated the capability to land safely without landing radar and within the 3-sigma altitude/targeting dispersion criteria of the Mission Control Center.

6.1.2.7 Lunar surface operations.- As experience was gained, the time required for extravehicular activity preparation was considerably shortened. For the Apollo 11 simulations, 2 hours had been allocated for extravehicular activity preparation, which consisted of film transfer, portable life support system (backpack) donning, and remote control unit attachment as well as checkout and pressure integrity checks of the extravehicular mobility unit. The close confinement imposed by backpack/suited work in the lunar module cabin and the less-than-orderly configuration of various items resulted in exceeding the planned preparation time on that mission. The Apollo 12 crew devoted more training time for extravehicular activity preparation than did the Apollo 11 crew; and, because of a very detailed high-fidelity cabin-stowage configuration, both crewmen prepared for egress in a rather routine fashion. On the Apollo 15 mission, the first of the 3-day lunar stay missions, the crew found that, with donning practice in the 1/6-earth-gravity environment and the confidence developed in extravehicular mobility unit performance, egress preparation times were consistently shorter than planned. Later crews confirmed that preparation times were considerably shortened after the initial extravehicular preparation. After each mission, preparation difficulties were quickly corrected. For example, a problem in mating the electrical remote control unit cable connector during the Apollo 11 mission resulted in the use of a more easily mated connector for later flights. Also, the preparation checklist was changed to eliminate communications checkout problems encountered during the Apollo 12 mission.

The Apollo 11 crew reported that preflight training at simulated 1/6-earth-gravity was reasonably adequate in preparing the crew for lunar module egress. Body-positioning techniques were necessary to prevent the backpack from engaging the instrument panel and the upper portion of the hatch frame. The Apollo 11 crew noted that egress operations around the hatch, porch, and ladder were performed easily without losing body balance. This crew found that they could jump vertically up the ladder to the third rung, thereby facilitating ingress past the high first step. They also noted the requirement to arch the back when halfway through the hatch to keep the backpack from snagging on the hatch frame. On subsequent missions, crewmen talked each other through the egress and ingress activity to minimize the snagging possibility.

A typical example of the evolution of lunar surface activity techniques resulting from 1/6-earth-gravity experience was the method of equipment transfer. Initially, a pulleylike double-strap conveyor was used to lower equipment to the surface and raise it into the cabin. The Apollo 11 crew found that, when the straps became heavily coated with dust, the dust fell on the suit of the surface crewmember and was also deposited in the lunar module cabin. The dust ultimately seemed to bind the pulley so that considerable force was required to operate the conveyor. A single-strap conveyor was used for Apollo 12 operations, but the crew reported that this conveyor also collected dust which was subsequently deposited in the cabin. In lieu of using a conveyor system, the Apollo 14 crew reported that stability and mobility on the ladder, maintained by using only one hand for support, seemed adequate to allow carrying equipment up the ladder. For Apollo 16 and subsequent missions, sample container bags, sample return containers, and pallets were quite easily hand-carried up the ladder, thus alleviating the dust problem with the conveyor. The conveyor had been further modified to a single short strap (which retained the camera/film/map equipment transfer bag) and was easily hoisted by one hand.

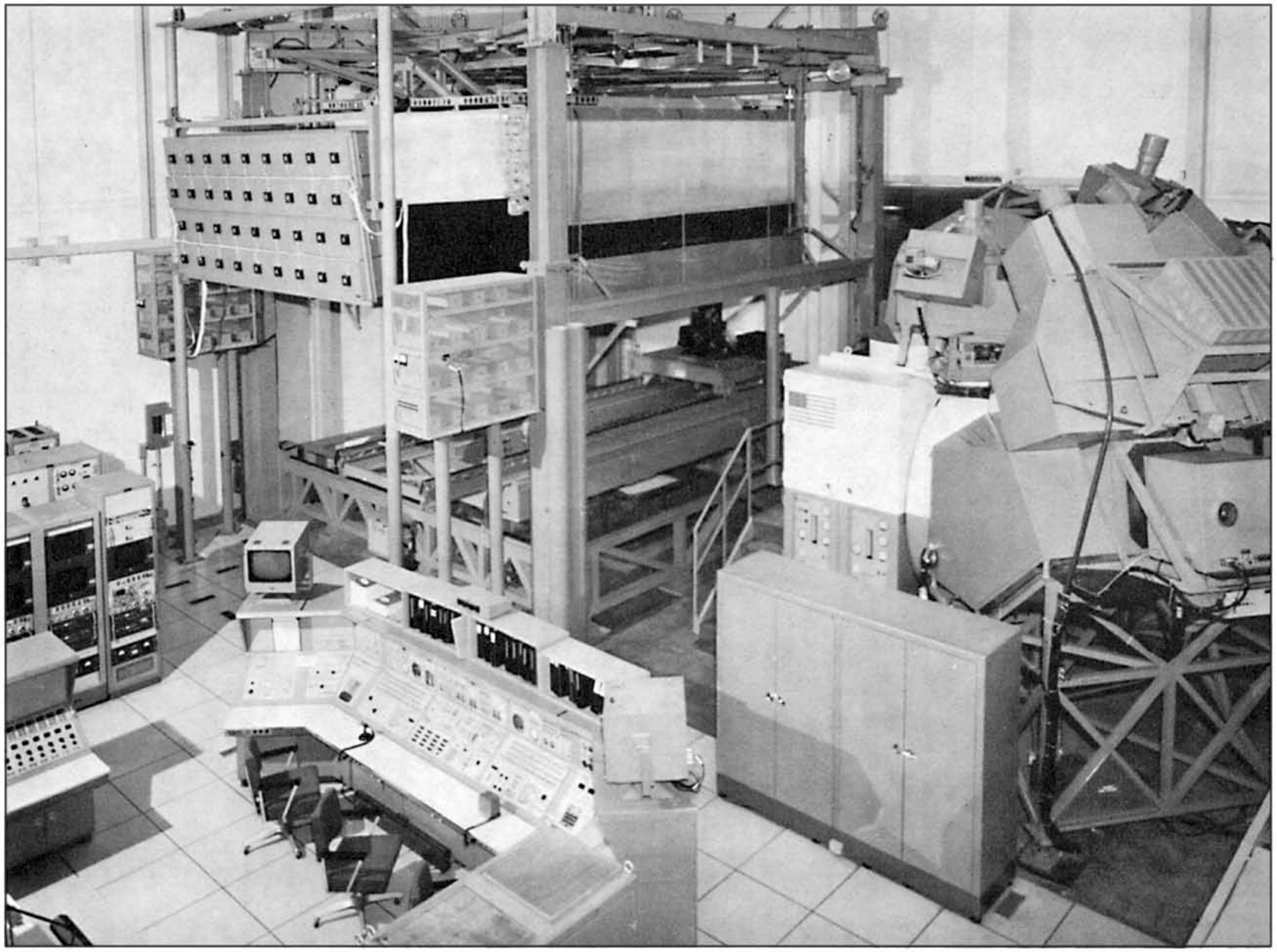

Figure 6-2.- Lunar Module simulator.

As first reported by the Apollo 11 crew, working in the 1/6-earth-gravity environment was not difficult and adaptation was quite natural. Movement was facilitated by using either a natural loping gait in which both feet were briefly off the surface or by using an earth-type running gait. Most crewmen preferred the loping movement. When the loping movement was used, the inertia of the crewman wearing the extravehicular mobility unit (representing an earth weight of 360 pounds) and the sometimes slippery effect of the lunar regolith required the crewman to plan for a finite stopping distance in advance of the selected point.

No crew reported significant discomfort because of insufficient heat removal by the liquid-cooling system in the backpack, even under the high surface temperatures encountered in the latter part of the lunar day and after some degradation of the suit heat-rejection capability because of lunar dust. The gradual increase in suit temperatures during the three long-duration extravehicular activities, first reported on the Apollo 15 mission, was handled by increasing the control setting to intermediate cooling and, occasionally, during high workload conditions, to maximum cooling.

With the outer visor down, the Apollo 11 crewmen noted that a brief period of dark adaptation was required when walking from sunlight into shadow. The Apollo 12 crewmen commented that the brightness was extreme when looking toward the sun while the sunlight was at low incidence angles, and they recommended an opaque upper visor in addition to the two side-shield visors. The sun elevation also affects the color of rocks and lunar soil. All crewmen noted washout of horizontal terrain and reduced visibility of vertical features when looking directly away from the sun while the sunlight was at low incidence angles. Crewmen frequently raised the outer visor for better viewing in shadowed areas and to compensate for the effect of the sun angle on mineral colors in rocks. As noted during the Apollo 17 mission, raising this visor greatly improved rock composition descriptions under some sunlight conditions and in the shadows.

The Apollo 11 crewmen recommended that future crewmen should consider kneeling and working with their hands to increase productivity on the surface. The Apollo 12 crewmembers reported that the efficiency of lunar surface work could have been increased by 20 to 30 percent if they had been able to bend over at the waist to retrieve surface samples. The capability for bending was made possible on the last three missions after the pressure suits were modified with a waist joint which was required to allow the crewmen to sit in the lunar roving vehicle. The improved waist flexibility permitted static kneeling for retrieval of samples during the Apollo 15 lunar surface activities and single-motion dynamic retrieval of samples during the Apollo 16 mission. Several falls to the surface were experienced and, on earlier missions, one crewman usually assisted the other in regaining his footing. With the improved-mobility pressure suits of later missions, footing was frequently regained without assistance.

Hand fatigue was the only memorable fatigue from lunar surface operations. The Apollo 12 crewmen reported that carrying the Apollo lunar surface experiments package was tiring to the hands because the carry bars had to be gripped tightly. Also, the Apollo 16 crewmen commented that the pressure suit glove required the crewman to maintain pressure on an object to grip it. A crewman's hand strength could not be relied on to apply the required pressure to grasp, hold, or manipulate objects on a continuous basis.

The Apollo 11 crewmen reported some physical exertion while transporting the lunar sample return container to the lunar module but indicated that tasks requiring greater physical exertion could have been undertaken. Both Apollo 12 crewmen believed, in general, that they were working at the maximum practical level needed for lunar surface activities. As a result of the successful 4-hour extravehicular activities during Apollo 12, the crewmen suggested that extravehicular periods could be extended to periods lasting as long as 8 hours without causing excessive fatigue. Thus, beginning with Apollo 15, three 7-hour extravehicular activities were scheduled. The Apollo 17 crew completed more than 22 hours of extravehicular lunar surface operations without apparent detriment to their working efficiency or well-being.

The methods of transporting samples, tools, and equipment on the lunar surface were continually improved. The Apollo 11 crew reported that 20 trips were required to fill up one sample return container positioned on the lunar module worktable. For the longer traverse of Apollo 12, a portable handtool carrier for geology tools and samples was taken to the lunar surface. However, the crewmen reported that holding the carrier at arm's length for rapid movement became tiring after a number of samples had been collected and later recommended attaching the carrier to the backpack in a manner similar to that used for carrying parts collected from Surveyor III.

Rock-sample bags were mounted on the backpack beginning with the Apollo 15 mission. The Apollo 14 crewmen used the modular equipment transporter to haul the tool carrier, lunar samples, and a portable lunar magnetometer. The transporter was reported to be stable and easily pulled; far less dust was kicked up by the wheels than had been anticipated before flight.

Beginning with the Apollo 15 mission, a lunar roving vehicle was taken to the moon for transportation on the longer traverses. The Apollo 15 crewmen reported that the steering of the lunar roving vehicle was quite responsive below a speed of 5 kilometers per hour but that sharp turns at 10 kilometers per hour resulted in breakout of the rear wheels. Incorporating a more positive seat restraint was recommended to minimize the effects of motion feedback to the directional hand controller. The crewmen noted that forward visibility was excellent except when driving away from the sun, which caused image washout and made obstacle avoidance difficult. With an improved seat restraint system, the Apollo crew drove the lunar roving vehicle over very hummocky and blocky terrain and up slopes in excess of 20°. They reported that the dynamics of the vehicle suspension system were excellent. The Apollo 17 crew traversed the same type of terrain while the lunar roving vehicle was loaded with a traverse gravimeter, a surface electrical properties experiment, and explosive packages for a lunar seismic profiling experiment. They reported a top speed of 17 to 18 kilometers per hour and covered a total distance of approximately 34 kilometers.

The Apollo 12 crew believed that efficiency on the surface would be enhanced by performing actual traverses under simulated lunar conditions during preflight training. As a result, later crews devoted the maximum practical amount of time to lunar surface science training, particularly geology. The crews of the last three missions devoted an average of 2 days per month to field geology training at lunarlike sites to sharpen their observational techniques and to become familiar with the mechanical aspects of collecting and documenting samples. On the last three missions, the character of lunar surface exploration changed drastically because of the capability for longer stay times on the surface and the availability of the lunar roving vehicle.

In an effort to obtain maximum scientific return from surface operations, the surface science time lines were generally overcrowded, especially when unforeseen equipment deployment problems were encountered. Although all crews trained with high-fidelity lunar surface hardware and tools, every lunar crew had to solve unanticipated problems. For example, the Apollo 12 fuel element for the experiments package became stuck in its cask, and the crew was required to hammer the cask to free it. During Apollo 14 surface activities, the Lunar Module Pilot's right glove developed an anomalous condition of assuming a neutral position to the left and down, thus requiring this crewman to perform geologic sampling tasks essentially with one hand during the second extravehicular period. On Apollo 15 operations while holes were being drilled for the heat flow experiment probes, the drill chuck became bound to the stem because of high torque levels. The stem had to be destroyed to remove the chuck for later deep-core drilling. A pair of pliers was used during the Apollo 16 activities to free the cosmic ray experiment when the experiment unexpectedly stuck in its frame. Finally, during Apollo 17 activities, both crewmen were able to retrieve the deep core only after considerable effort and after using a real-time-developed 1/6-earth-gravity "fall" upon the extraction tool.

Science return was improved by using crew experience to benefit follow-on crews. On the Apollo 11 mission, for example, the core sample tube could be forced to a depth of only 4 or 5 inches by hand and driven only 6 inches with a hammer. The tubes were redesigned for Apollo 12 activities; the crew reported that the tubes were easy to drive but that space remained in the tube because of soil compaction. For Apollo 14 operations, the tubes were plugged with caps to help retain the cores. The Apollo 14 crew reported that finding rocks small enough to fit in the small bags was difficult; therefore, the Apollo 15 crew was given larger sample bags. The Apollo 15 crew reported that collection of the deep-core sample was difficult and required far more time and effort than was anticipated; thus, the Apollo 16 crew was given a redesigned extraction tool that was excellent in aiding deep-core recovery. The Apollo 16 crew experienced numerous equipment problems which were corrected for the Apollo 17 mission.

The Apollo 11 crewmen reported that their sleep on the lunar surface was a complete loss because of light leakage into the cabin, excessive cabin noise, and an uncomfortably cool cabin temperature. The Apollo 12 crewmen, who slept in their pressure suits in sleeping hammocks, noted that the cabin noise was loud, but not loud enough to prevent adequate sleep. The Apollo 14 crew reported that very little sleep was obtained on the surface, primarily because they were

uncomfortable in the suits, and recommended that crews remain unsuited during sleep periods. When this recommendation was adopted for Apollo 15 and subsequent missions, crews obtained adequate sleep. Also, a correlation was noted between the ability of the crews to sleep soundly and their increasing confidence in the proper operation of lunar module systems, based on proven performance.

All crews reported that food preparation and waste management functions were easier to perform in the lunar gravity field as compared to the zero-gravity conditions of flight. On the lunar surface, for example, food bags conveniently stayed where they were placed. also, air bubbles in water, permanent in zero gravity, automatically floated out of the in-suit drink container and the hydrated food bags.

A troublesome and ever-present problem that was corrected only partly during lunar surface missions was that of dust. On all missions, large amounts of floating dust were present in the lunar module cabin after insertion into lunar orbit. The Apollo 12 crew noted that dust made breathing without helmets both difficult and hazardous. Although all crews, before entering the lunar module, spent considerable time removing dust from their shoes, legs, arms, pressure suits, and lunar surface equipment, the cohesive nature of the dust prevented its complete removal. During the Apollo 17 mission, dust on the lunar module floor was swept into floor receptacles which were sealed before lift-off, but some dust was still present in the cabin atmosphere after lunar orbit insertion. Because of dust, the Apollo 16 crew had difficulty with the installation of their pressure gloves, and the surface equipment locks and handles on Apollo 17 equipment were barely operating by the end of the last extravehicular activity.

6.1.2.8 Rendezvous and docking.- Rendezvous of the Apollo 7 command and service module with the S-IVB booster stage was the first rendezvous performed in the Apollo program. The crew reported that the manually controlled braking maneuver was very discomfiting because no reliable backup ranging information was available to compare with computer solutions as was the case for a lunar module rendezvous. The first rendezvous of the command and service module and the lunar module was performed in earth orbit on the Apollo 9 mission. A similar rendezvous was demonstrated on the Apollo 10 mission in lunar orbit to check the maximum range performance of the rendezvous sensors. In this latter mission, the lunar module was visually tracked through the command module sextant against the lunar surface to a distance of 125 miles in daylight, above the horizon in daylight to 275 miles, and at night to 230 miles. In earth orbit, the Apollo 9 crew visually acquired and tracked the jettisoned lunar module, again using the sextant, at a range of 2500 miles.

Rendezvous thrusting maneuvers in the lunar module were protected by "mirror image" readiness in the command and service module to perform a backup thrusting maneuver in case the lunar module propulsion system failed. This backup technique was initiated for the Apollo 9 mission and was continued for all subsequent rendezvous operations.

For rendezvous missions through Apollo 12, the lunar-orbit-rendezvous sequence consisted of concentric sequence initiation, a possible plane change, and constant-differential-height maneuvers before a terminal phase initiation. These maneuvers allowed the proper correction of sizable trajectory dispersions. However, beginning with Apollo 14, the precision of rendezvous maneuver calculations and performance analyses made possible the deletion of the three smaller maneuvers before terminal phase initiation by substituting a ground-calculated trajectory-adjustment maneuver shortly after lunar module ascent stage orbit insertion. The terminal phase initiation maneuver was then performed with the ascent propulsion system. Any midcourse corrections performed during the several lunar rendezvous sequences were conducted manually using the lunar module reaction control system. The braking phase was also performed manually in a rate-command attitude-hold mode, with the rendezvous radar supplying accurate range, range-rate, and inertial line-of-sight data to reveal any dispersions in maneuver calculations or in the performance of previous maneuvers.

For the Apollo 16 mission, a "brute force" re-rendezvous was conducted with the command module active to bring the two spacecraft back together after an aborted command and service module circularization maneuver. In this case, the lunar module radar was used to supply accurate range, range-rate, and line-of-sight data, which were conveyed to the Command Module Pilot through crew radio coordination using instructions similar to those of a ground-controlled approach aircraft landing. These data allowed the Command Module Pilot to maintain the planned range rate and to null the line-of-sight rates using the more accurate lunar module data.

Lunar module crews were trained to be proficient in using the backup maneuver charts, which permitted semi-independent checks of maneuver calculations and actual performance in case a critical computer failure occurred. Use of the charts was based on range, range-rate, and angular-rate data provided by the lunar module radar.

All reasonably high velocity braking phases were performed comfortably by all lunar module crews during simulations, as were the actual flight braking phases, because of the optimum lunar module reaction control system thrust-to-weight ratio using the lunar module reaction control system. However, rendezvous simulations showed the command and service module performance to be marginal during dispersed braking thrusting in excess of 40 feet per second.

At the completion of lunar-module-active rendezvous on the Apollo 9 mission, the lunar module was used as the active docking vehicle. Review of this procedure indicated that docking would be easier, more accurate, and less time-consuming if the command module were the active vehicle. Thus, for subsequent missions, the lunar module was maneuvered to the docking attitude and the command and service module was used to complete final approach and docking. One factor in the difficulty of controlling the lunar module for final docking was the 90° mental reorientation of the translation axis required of the Commander. This axis reorientation and the 90° body/head rotation required for overhead viewing of the docking aids relegated the lunar-module-active docking maneuver to a backup procedure, even though excess reaction control propellant was aboard the lunar module on every flight.

6.1.2.9 Lunar orbit operations.- The Apollo 8 crew reported that groundtrack determination on the far side of the moon was more difficult than expected because of the large uncertainty in the accuracy of the preliminary maps of that region. Maps of the far side were improved throughout the program as a result of Apollo lunar-orbit photography and landmark tracking.

The Apollo 10 crew conducted lunar surface photography of proposed Apollo landing sites and landmark tracking of the proposed Apollo 11 landing site. On Apollo 11, selected landmarks were tracked from the command module while the lunar module was still docked. In addition, the Command Module Pilot tracked selected landmarks during solo flight and searched for the lunar module on the surface, examining an estimated 1 square mile on each overhead pass. During Apollo 12 solo operations, with the lunar landing site being northwest of the recognizable Surveyor crater, the Command Module Pilot was able to locate the lunar module on the surface by using the sextant. He reported the lunar module as a bright object with a long, pencil-thin shadow and also observed the Surveyor III spacecraft as a bright spot in the crater. During Apollo 17 solo operations, the Command Module Pilot's low-altitude landmark tracking data for the Taurus-Littrow site was incorporated into lunar module targeting and was a factor in the precision of the actual landing.

The Apollo 14 spacecraft was equipped with a large, high-resolution topographic camera for so-called bootstrap photography of Descartes, the Apollo 16 landing area. (Data from the photographs were to be used for the selection of landing sites.) Although the high-resolution camera malfunctioned, the Command Module Pilot was still able to record more than 120 pictures of the proposed Descartes site using another camera with a 500-mm lens in support of the site selection analysis for Apollo 16.

For Apollo 15 and subsequent missions, the Command Module Pilot had to time the operation of scientific instrument module experiments. The crewmen developed various reminder techniques for performing the required operations. The computer timer was used for Apollo 15 operations. During Apollo 16 operations, the Capsule Communicator provided ground voice assistance, and the Command Module Pilot used a "kitchen timer" onboard.

Because the ability to make accurate observations of surface features during lunar orbit was demonstrated on early lunar landing missions, the Command Module Pilot of each later mission devoted considerable training time to preparing for lunar geology observations, including flying over and describing selected earth analogs. Their flight performance indicated that this training was extremely effective. For Apollo 16 and 17 activities, the Command Module Pilots spent considerable time reviewing lunar orbit flight plans in the simulator before flight to verify such items as the adequacy of planned maneuver times, maneuver gimbal lock avoidance, the feasibility of dim-light photographic techniques, and the proper time line integration of scientific instrument module operating procedures. Thus, the use of simulators to verify and correct lunar orbit time lines before flight relieved the Command Module Pilot of the need for continual maneuver monitoring and provided time for the important lunar orbit photography and surface observations.

6.1.2.10 Command Module extravehicular activity.- The command module cabin depressurization systems were exercised for the first time on the Apollo 9 mission, including hatch opening and closing. The Apollo 9 Command Module Pilot was able to move easily within the open hatch and center couch envelope. (The center couch was stowed.) For Apollo 15 and subsequent missions, the Command Module Pilot performed an extravehicular activity during transearth coast to retrieve film from the scientific instrument module and to operate certain experiments directly. An oxygen purge system (retained from lunar surface operations) was installed in the "helmet-mounted" mode behind the Command Module Pilot's shoulders to provide backup breathing oxygen and cooling in case the umbilical line failed. In zero gravity, the oxygen purge system tended to hang up on the many protrusions in the center couch envelope and hatch area during egress and ingress. Generally, comments from the other two crewmen on the Command Module Pilot's body-positioning aided his egress and ingress.

On Apollo 15, 16, and 17, each Command Module Pilot moved from the command module to the scientific instrument module bay along a handrail traverse path and returned the film cassettes without incident. All pilots reported that the handrails were excellent as mobility aids, allowing for flexibility in body orientation and in operation sequence.

6.1.2.11 Crew accommodation to zero gravity.- The Apollo 7 crew reported that they adjusted to zero gravity quickly and completely. They stated that at no time was intravehicular activity a problem, although suited movement was awkward as compared to unsuited motion. The main physical problem encountered during Apollo 7 operations was the extreme discomfort caused by head colds. The crew noted that the mucus did not leave the head area but congested and filled the sinus cavities.

Adaptation to zero gravity varied widely from one crewman to another. Some crewmen noted a temporary fullness of the head, others noted a desire to move slowly at first, and still others commenced immediate and rapid body movements without adverse effects. Most crewmen reported that the adaptation to body maneuvering in zero gravity could be speeded considerably by conducting vigorous aerobatics before flight in a T-38A jet aircraft which was provided for astronaut flight proficiency training.

Sleep habits in zero gravity also varied widely among the Apollo crewmen. For example, some crewmen thought that they slept best when they were restrained in the sleeping bag or when they were strapped in the couches. Others found that they could sleep soundly while floating freely in the cabin. Some crewmen, however, slept too well. For example, the Apollo 17 crewmen were difficult to awaken on several occasions during their mission. Other crewmen slept fitfully one night and well the next. The general subjective opinion was that not nearly as much sleep was required in zero gravity as was required on earth unless a crewman was particularly fatigued from the day's activities.

Food preparation in zero gravity was a time-consuming process because of prelaunch package stowage, package control, use of package overwraps, manual mixing of water and food in the rehydratable packages, and the requirement to restow the used food packages in a small volume. In zero gravity, when the food packages were rehydrated with water containing gas bubbles, the bubbles could not be removed from the food. The hydrogen gas separator used on lunar flights did not successfully remove the gas from the water on every occasion. Gas bubbles in the food and water contributed to intestinal problems experienced by the crewmen during the last two missions.

The Apollo 15 crew reported that more time than had been anticipated was required for normal housekeeping functions. This condition was attributed to the fact that additional equipment from the lunar surface (such as experiments and rock bags) and the new bulkier pressure suits crowded the crew compartment. The Apollo 16 crew noted the same problem and recommended that additional time be allotted for stowage and for personal hygiene.

6.1.2.12 Guidance and navigation systems.- All flight crews reported great confidence in the performance of the primary guidance and navigation systems in both spacecraft. Power permitting, crews unanimously chose to keep the inertial measurement unit (platform) powered up and aligned because the unit would permit very rapid and accurate response to every conceivable abort situation requiring immediate velocity changes. The platform was not powered down on the lunar landing missions until the power requirements for the 3-day surface stays dictated the necessity for conserving power.

Alignment of the platform in the command module was readily achieved. Commencing with the Apollo 7 mission, all crews reported that several minutes were required for the eyes to adapt to the recognition of constellations when the command module telescope was used at night in either earth orbit or lunar orbit and in earthshine light conditions. With the lunar module attached during translunar coast, sun reflections from the lunar module into the optics prevented any but the brightest stars from being seen with the telescope. During transearth coast, constellations could usually be recognized when the telescope was pointed away from the sun, earth, or moon. In general, to maintain platform alignment during translunar coast, the Command Module Pilot relied on automatic optics positioning to place reference stars in the field of view of the 28-power sextant.

Upon activation of the docked lunar module, initial alignment was accomplished by transferring the command module platform angles to the lunar module platform. (Initially, ground-computed angles had been used to correct the angular platform misalignments between the two vehicles.) For Apollo 15 and subsequent missions, the lunar module telescope was used for fine alignments of the platform while docked. The Apollo 9 crew reported that visibility through the lunar module telescope was adequate to identify bright stars and the more prominent constellations at night.

Every flight crew was concerned with the prospect of losing inertial attitude reference when maneuvering to an attitude in which the yaw angle exceeded 85°. This condition was called gimbal lock. Many simulations of dynamic flight situations showed that maneuvers leading to gimbal lock could have been hazardous under certain conditions, such as postatmospheric launch abort (possibly causing an aft-end-forward entry). Therefore, many autopilot maneuvers had to be stopped before completion and the spacecraft maneuvered manually to avoid gimbal lock. The Apollo 9 crew commented that greater-than-desired amounts of time and propellant were required to keep the docked configuration out of gimbal lock in drifting flight. The Apollo 11 platform was inadvertently placed in gimbal lock when the lunar module was maneuvered to avoid bright sunlight in the forward window. Just before entry of Apollo 13, close cooperation between the Command Module Pilot and Lunar Module Pilot was required to avoid gimbal lock in the platforms of both vehicles. This procedure used considerable lunar module reaction control fuel and still placed the command module platform close to gimbal lock. The command module platform was placed in gimbal lock during drifting flight of Apollo 17 while a waste-water dump was being performed. The possibility of platform gimbal lock thus restricted many spacecraft maneuvers.

Crew/computer operational compatibility improved continuously throughout the Apollo missions. Computer programs were changed to delete extraneous displays; to eliminate unnecessary delays; and to provide the crews with meaningful monitoring capability of computer navigation computations, autopilot operations, and velocity changes. The Apollo 11 Command Module Pilot recalled that he had little time to analyze off-nominal rendezvous trends or to cope with system malfunctions because he was busy with hundreds of computer entries and numerous lunar module tracking marks. For Apollo 15 operations, an automatic sequencing computer program, designed to relieve the Command Module Pilot's workload, was available for the rendezvous phase. The program was functional as designed and allowed the Command Module Pilot much more time for optics tracking and systems monitoring.

Because of a malfunction during the Apollo 14 mission, an abort discrete signal was set in the lunar module computer before powered descent. Such a signal during powered descent would automatically initiate an unwanted abort. To prevent an abort, ground personnel devised a real-time workaround erasable memory program which inhibited the abort capability of the primary guidance system, and the program was entered in the computer. This abort discrete was inhibited on subsequent missions. Although no major changes in computer programs were made on the last three missions, erasable memory programs were devised for many critical guidance and navigation system failure possibilities. In fact, one such program was used during the Apollo 16 mission to prevent recurrence of a loss in platform reference and to correct an intermittent, and apparently erroneous, indication of failure of the coupling data unit. The operational requirements for designing flexibility into future spacecraft computers and for having a better balance between fixed and erasable memories were demonstrated by the sweeping revisions made to the Apollo computer programs until late in the Apollo missions and by the extensive development of the erasable memory programs to correct potential hardware and computer software failures.

The abort guidance system was an efficient backup system to the primary guidance and navigation system. On all lunar flights, good agreement was achieved between the abort and the primary guidance systems in the solutions for ascent stage orbit insertion and terminal phase initiation. A feature of the abort guidance system was that there was no gimbal lock to restrict lunar module maneuvering or cause loss of attitude reference.

6.1.2.13 Entry and landing.- The Apollo 7 crew performed entry while suited but with helmets and gloves removed. The crewmen had developed head colds, and removal of the helmets provided a means of clearing the sinus and inner ear cavities. Follow-on crews entered the earth atmosphere with their suits stowed under the couches.

The Apollo 8 and 10 crews reported that the appearance of the ionization envelope around the spacecraft preceded the 0.05g indication of entry by approximately 15 seconds. These crews also noted that the ionized plasma streaming by the windows bathed the cockpit in light that was as bright as normal daylight. All entries were flown using the entry autopilot or the primary guidance and navigation system. Crews verified that the primary guidance system never violated the skip-out tangency lines of the entry monitor system. Because of thunderstorms in the primary recovery area, the Apollo 11 crew made a long-range entry of 1500 miles instead of the planned 1285 miles.

Crew training for supercircular entry was initially accomplished through closed-loop centrifuge runs using the entry monitor system. The crews felt confident (and the simulations demonstrated) that they could monitor and take over the control of entry for a wide range of failure conditions in the primary guidance and navigation system. In the simulators, supercircular entries could be flown fairly accurately to landings near the recovery ship when using the secondary (entry monitor system) displays and to a safe landing in the ocean using only the gravity meter.

When one of the main parachutes failed during the Apollo 15 parachute descent, the resulting increased descent rate caused a landing that was 32 seconds early, but the crew felt no physiological effects from the harder landing impact. A considerable variation in the force of the landing impact was subjectively described by each crew. The hardest landing probably occurred during the Apollo 12 mission, in which an impact acceleration of 15g was produced. The impact jarred a 16-millimeter camera loose from its mounting bracket, and the camera hit the Lunar Module Pilot's head.

Of the 11 landings, five resulted in the spacecraft coming to rest in the stable II position (heat shield up), but the spacecraft was always righted without problems by inflating the uprighting bags. When the Apollo 11 crew donned the biological contamination garments required for the initial lunar landing missions, their visibility was substantially degraded because of condensation on the faceplates. The contamination-prevention procedures were modified to include the use of a portable face mask for the Apollo 12 and 14 missions, after which the requirement for the procedures was eliminated.

The thorough egress and recovery training program provided each crew by qualified landing and recovery personnel was a major factor in the satisfactory recovery of all crews.

## 6.2 FLIGHT CREW TRAINING PROGRAM

The fidelity of crew training improved with each mission as the flight results and crew experience provided the necessary feedback to the training program. Through this process, crew procedures, flight plans, and checklists that had once required an appreciable amount of crew time to develop and verify became standardized. With this maturity and standardization in the program, crew training time for the later missions could be more heavily focused on scientific aspects.

The training of flight crews may be conveniently divided into five major categories: simulators, special-purpose activities, procedures, briefings, and spacecraft tests. A delineation of the activities for each category and a summary of the hours logged by the assigned crewmembers are presented in table 6-II. The 37 953 hours of operations in the command module and lunar module simulators, with briefings, represents 45 percent of the total training time expended. As

TABLE 6-II.- TRAINING TIME SUMMARY

| Type of training | Number of hours |
|---|---|
| **Simulator** | |
| Command module | |
| Command module simulator | 17 605 |
| Command module procedures simulator | 1 204 |
| Simulator briefings | 1 195 |
| Contractor evaluations | 866 |
| Dynamic crew procedures simulator | 741 |
| Other simulators | 156 |
| Rendezvous and docking simulator | 87 |
| Centrifuge | 58 |
| Massachusetts Institute of Technology hybrid | 48 |
| Subtotal | 21 960 |
| Lunar module | |
| [a]Lunar module simulator | 13 317 |
| [b]Lunar landing training vehicle | 1 130 |
| Lunar module procedures simulator | 770 |
| Simulator briefings | 533 |
| Full mission engineering simulator | 179 |
| Translation and docking simulator | 64 |
| Subtotal | 15 993 |
| Total | 37 953 |
| **Special Purpose** | |
| [c]Lunar science | 11 408 |
| Water immersion facility checkout | 1 248 |
| Stowage | 993 |
| Extravehicular mobility unit checkout | 919 |
| Egress | 820 |
| Bench checks | 802 |
| [d]Walkthroughs | 719 |
| Medical | 601 |
| Water immersion facility (zero g) | 516 |
| Planetarium | 448 |
| Fire | 174 |
| Total | 18 648 |

[a]Includes lunar roving vehicle navigation simulator.

[b]Includes lunar landing training vehicle flights (at 2 hours per flight), vehicle systems briefings, lunar landing research facility, and lunar landing training vehicle simulator time.

[c]Includes briefings, geology field trips, lunar surface simulations, and lunar roving vehicle trainer operation.

[d]Related to zero-g flight operations.

TABLE 6-II.- TRAINING TIME SUMMARY - Concluded

| Type of training | Number of hours |
|---|---|
| Procedures | |
| Mission techniques | 2 730 |
| Checklist | 2 334 |
| Flight plan | 1 987 |
| Mission rules | 1 039 |
| Design, acceptance | 1 011 |
| Test reviews | 814 |
| Team meetings | 541 |
| Training meetings | 393 |
| Rendezvous | 288 |
| Extravehicular contingency transfer | 88 |
| Flight readiness reviews | 48 |
| Total | 11 273 |
| Briefings | |
| Command and service module | 4 060 |
| Guidance and navigation | 2 397 |
| Lunar module | 2 130 |
| Lunar topography | 1 458 |
| Launch vehicle | 656 |
| Photography | 405 |
| Total | 11 106 |
| Spacecraft tests | |
| Command and service module | 3 332 |
| Lunar module | 1 759 |
| Total | 5 091 |
| Program total | 84 071 |

pointed out in other sections, the Apollo simulators provided the most valuable source of crew training for each mission. A description of these simulators is provided in reference 6-12. The time listed for lunar science training, shown in table 6-II as a special-purpose activity, is the third highest total behind command module and lunar module simulator training. Science training included geology field trips, lunar surface activity simulations, extravehicular preparation and postactivity operations, and lunar roving vehicle trainer operation.

Table 6-III shows these same training data grouped into three different mission categories: missions before lunar landing (C-, D-, and F-series missions), the first four lunar landing missions (G- and H-series missions), and the final three lunar landing missions (J-series missions), The trend in training emphasis across the three categories is interesting. Simulator training, besides being the largest single training activity, increased significantly for the early lunar landing missions and then decreased for the J-series missions. The special-purpose training steadily increased in its percent of the total, with lunar science activities for the J-series missions making up more than one-third of the total training effort. The training categories of briefings, procedures, and spacecraft tests exhibited a decreasing level of training effort. These decreases are, indeed, signs of maturity and standardization of flight procedures.

A further delineation of the training accomplished by the crews of the lunar landing missions is provided in tables 6-IV and 6-V, which summarize the number of lunar surface simulations and geology field trips. The lunar surface exercises in table 6-IV include training for operations before, during, and after extravehicular activity. Lunar surface training made use of a full-scale, high-fidelity, lunar module mockup and actual lunar surface equipment. Training exercises commenced after egress through the hatch and terminated before ingress, following closely the planned lunar surface time lines. The training for the periods before egress and after ingress provided rehearsals for the necessary crew procedures before and after the lunar surface activities. Major tasks in this training included backpack donning and doffing, cabin decompression and repressurization, lunar surface sample stowage, and equipment cleaning. The geology field trips presented in table 6-V, especially for the J-series missions, generally followed an order of increasing complexity. Earth features analogous to certain lunar geologic formations were studied on the early field trips. These trips were followed by field exercises of lunar surface traverse simulations using some of the lunar surface sampling and geologic equipment. The latter field trips rehearsed a nearly complete mission simulation and included the science support teams in the Mission Control Center working with the suited astronauts on location.

For each mission, full dress rehearsals of the various flight phases were accomplished where integration of the crew, the flight plan, and the ground support elements was an essential part of the preflight preparation. These simulations were as valuable in preparing the ground crews as they were for the flight crews. The scope of this phase of the simulation training program is presented in table 6-VI in which the days spent conducting full-scale mission simulations for the flight crew and Mission Control Center personnel are listed.

## 6.3 FLIGHT PLANNING

Any major manned spaceflight project requires a documented flight plan which brings man, machine and operational techniques together to execute a mission. The need was particularly important in the complex Apollo program. Among the factors considered and eventually integrated into the Apollo flight plans were:

a. Mission objectives and their related constraints

b. Vehicle system constraints and operations

c. Crew and ground procedures and their relationships

d. Duration and sequence of crew activities

e. Division and interaction of onboard tasks

f. Consumable constraints

g. Alternate and contingency plans

TABLE 6-III.- APPORTIONMENT OF TRAINING ACCORDING TO MISSION TYPE

| Training category | Missions before first lunar landing (Apollo 7 through 10) | | Early lunar landing missions (Apollo 11 through 14) | | Final lunar landing missions (Apollo 15 through 17) | |
|---|---|---|---|---|---|---|
| | Hours | Percent of total | Hours | Percent of total | Hours | Percent of total |
| Simulators | 11 511 | 36 | 15 029 | 56 | 11 413 | 45 |
| Special purpose | 4 023 | 13 | 5 379 | 20 | 9 246 | 36 |
| Procedures | 7 924 | 25 | 2 084 | 8 | 1 265 | 5 |
| Briefings | 5 894 | 18 | 3 070 | 11 | 2 142 | 9 |
| Spacecraft tests | 2 576 | 8 | 1 260 | 5 | 1 255 | 5 |
| Total | 31 928 | 100 | 26 822 | 100 | 25 320 | 100 |

TABLE 6-IV.- LUNAR SURFACE ACTIVITY SIMULATIONS

(Number of training sessions)

| Apollo mission | Surface operations | Operations before and after extra-vehicular activities | Total per mission |
|---|---|---|---|
| 11 | 20 | 10 | 30 |
| 12 | 31 | 4 | 35 |
| 13 | 42 | 11 | 53 |
| 14 | 43 | 18 | 61 |
| 15 | 91 | 20 | 111 |
| 16 | 67 | 10 | 77 |
| 17 | 47 | 20 | 67 |
| Total | 341 | 93 | 434 |

TABLE 6-V.- GEOLOGY FIELD TRIPS[a]

| Apollo mission | Number of trips |
|---|---|
| 11 | 1 |
| 12 | 4 |
| 13 | 7 |
| 14 | 7 |
| 15 | 12 |
| 16 | 18 |
| 17 | 13 |

[a]Each field trip lasted from 1 to 7 days.

TABLE 6-VI.- INTEGRATED CREW/GROUND MISSION SIMULATIONS[a,b]

(Number of days)

| Apollo mission | Command module simulator | Lunar module simulator | Command module and lunar module simulators | Total per mission |
|---|---|---|---|---|
| 7 | 18 | 0 | 0 | 18 |
| 8 | 14 | 0 | 0 | 14 |
| 9 | 10 | 2 | 8 | 20 |
| 10 | 11 | 0 | 7 | 18 |
| 11 | 6 (1) | 4 | 7 | 17 (1) |
| 12 | 10 | 3 | 12 | 25 |
| 13 | 13 | 5 | 9 | 27 |
| 14 | 12 (3) | 5 (2) | 12 (1) | 29 (6) |
| 15 | 13 (6) | 5 | 7 | 25 (6) |
| 16 | 16 (5) | 7 (1) | 10 | 33 (6) |
| 17 | 13 (2) | 6 | 9 | 28 (2) |
| Total | 136 (17) | 37 (3) | 81 (1) | 254 (21) |

[a]Includes participation of Mission Control Center personnel.

[b]Numbers in parentheses indicate simulations accomplished by follow-on or support crewmen.

By the interaction of the preceding factors, the flight plan ultimately communicated to project participants their roles and responsibilities, served as a guide for mission execution and, in the end, was the means by which performance was measured.

### 6.3.1 Flight Plan Development

Flight plans, in a variety of forms and for a variety of purposes, were required from the embryonic program definition stage through the culmination of the program with the lunar landing missions. Through early experience, flight plan concepts matured and the flight plan became recognized as a valuable tool in integrating many disciplines.

Apollo flight plans varied in complexity from that of the relatively simple Apollo 7 mission, involving one spacecraft in earth orbit, to those of the lunar landing missions, wherein two spacecraft were active simultaneously in a fully integrated time line. Flight plans, tried and proven from each mission were progressively improved so that, even though flights became more complex, the crews became more efficient.

6.3.1.1 Flight planning techniques.- All activities identified for Apollo flights were scheduled in the flight plan in a sequence required to accomplish certain objectives. The activity sequence fell into two basic categories:

a. Consecutive activities — These consist of a series of related activities which must be performed in a fixed sequence to accomplish a desired goal. Lunar module activation fell in this category. Consecutive flight plan activities have the advantage of changing very little from mission to mission and, therefore, provide the crew with tried and proven sequences during critical mission phases.

b. Non-consecutive activities — These consist of a series of activities which need not be performed in a fixed sequence to accomplish a desired goal. Lunar orbit science activities fell in this category. Non-consecutive flight plan activities have the advantage of allowing the crewman, from his vantage point, to select the best activity sequence to optimize a particular situation.

Within each category, certain activities are necessarily dependent on time and place of execution. These activities are called dependent activities. Activities which are not constrained by time or place are called independent activities. "Padding" was allowed in consecutive flight plans to ensure that dependent activities would be performed at the appropriate time or place. For non-consecutive flight plans, dependent activities were easily schedulable since the activity sequence was flexible.

6.3.1.2 Alternate and contingency flight plans.- Apollo flight plans were constructed to provide a maximum accomplishment of mission objectives assuming no major off-nominal situations. These were called prime flight plans and one was generated for each mission. Unfortunately, because of the complexities of vehicle systems and operational constraints, no Apollo flights were executed exactly as planned preflight.

In addition to the prime flight plan, two other types of flight plans were developed to support probable and/or predictable off-nominal situations. Each flight plan attempted to optimize the mission based on the given off-nominal situations.

a. Alternate flight plans — In the event the launch could not occur on the planned day and time, alternate launch day flight plans were developed. Each flight plan was highly dependent on a detail trajectory. Because the lunar trajectory is influenced by time and launch data, a great deal of effort was spent developing unique trajectories and flight plans for each launch opportunity. The alternate flight plans were equal to the prime flight plan in mission objectives.

b. Contingency flight plans — Flight plans were developed to support missions brought about by the failure of some critical system. While it was difficult to plan for all situations, only those system failures which could radically affect the completion of the mission were considered (e.g., no translunar injection; no transposition, docking and extraction; lunar module failure; etc.). Contingency flight plans attempted to glean as much as possible from the given situation but fell far short of the objectives of the prime or alternate flight plans. By the time of the Apollo 17 mission, five distinct alternate mission plans, 20 contingency plans, and eight lunar orbit alternate plans were developed.

6.3.1.3 Flight plan verification using simulators.- Early flight experience indicated that the portions of a mission that were simulated most thoroughly were those that were best executed and virtually free of unexpected situations except for systems anomalies. Consequently, more emphasis was placed in later missions on simulating as much of the mission as possible. In fact, for the Apollo 16 and 17 missions, virtually the entire mission was being verified in the simulators.

Crew simulations were very important to the flight planning and procedures development process. Simulations provided a near-actual flight environment using equipment that closely matched actual vehicle performance. In this situation the crew could execute portions of the flight plan and could verify the sequence of activities, the length of activities, and the activity interaction with trajectory and systems. The flight plan was tested and consequently optimized from these simulations.

### 6.3.2 Flight Plan Execution

The onboard flight plan served as a crew guide in the execution of a mission. In some mission phases, the flight plan provided all of the execution data required to perform that phase. In other phases, especially those that were critical and complex, the flight plan served as an index to checklists required in that phase by providing book names and page numbers where procedures were to be found. In these cases, the flight plan would set the sequence of activities but checklists provided the actual procedural information.

Major emphasis during the Apollo program was placed on the execution of the mission exactly as planned. In general, flight crews executed their flight plans with few missed activities. The major contributors to off-nominal activities were equipment malfunctions. In order to prevent major deviations from the prime flight plan, a close interface between the flight crew and ground support team was required to quickly provide alternatives or solutions to problems. This cooperation yielded a near-normal flight plan execution and, at the same time, optimized the mission.

Changes to the flight plan during a mission were communicated by voice to the crew. The crew would then work the changes on the prime flight plan. This technique was somewhat cumbersome since it required much crew time, and was inherently confusing. It was therefore important that the execution of the flight plan be as close to the preflight plan as practical.

### 6.3.3 Change Control

The Apollo flight data file consisted of documents placed aboard the spacecraft for crew reference in flying a mission. In addition to the flight plan, the following types of documents were included.

a. Integrated flight procedures checklists (generally providing all information required to conduct specific phases of a mission)

b. Systems checklists (procedures for operating specific systems)

c. Malfunction checklists (procedures for isolating and correcting certain failures)

d. Systems data book

e. Graphics and maps

f. Cue cards (abbreviated procedures for crew use during time-critical high-density activities)

At the beginning of the Apollo program, the crew procedures control process was intended to cover system operating procedures documents acquired from the hardware suppliers and internally generated procedures documents which were not used in flight. As the program developed, it became obvious that attempting to control crew procedures through documents that were not used directly by the crews was difficult and expensive. The interrelationships between the various control documents and the onboard documents were not adequately defined, nor was the purpose of control documentation well understood. During the course of the program, procedural change control gradually evolved until on Apollo 17 all procedures change control was directed toward the flight data file. In general, in the latter stages of the program, the change control techniques were to maintain overall cognizance and control of the flight data file contents and schedules. Requirements for new flight data file articles or procedures were reviewed by the crew procedures control board. Mature articles or procedures remained under direct control from mission to mission, thereby requiring that change control procedures be followed for all changes. New articles or procedures normally came under direct control after the basic article was published. Items that were highly trajectory dependent were updated to the new trajectory without a requirement for crew procedures control board concurrence.

Additional information on flight planning for Apollo missions is given in reference 6-13.

## 6.4 OPERATIONAL PHOTOGRAPHY

In the course of the Apollo program, a varying complement of photographic equipment was carried aboard each spacecraft to perform operational documentation, record crew observations, and accomplish many scientific objectives. This photographic equipment most often consisted of a 16-millimeter sequence camera system, two 70-millimeter still camera systems, and a 35-millimeter still camera system. A 127-millimeter lunar topographic camera was used to a limited extent. The equipment complement also included a light-metering system and various brackets and filters to meet the required photographic objectives. The photographic equipment used on each flight through Apollo 13 is tabulated in reference 6-14. The reference also contains a discussion of equipment hardware and operational development for three manned programs. Further details on equipment characteristics can be found in reference 6-15. This report deals primarily with photographic equipment and use for Apollo missions 14 through 17, thereby supplementing the contents of reference 6-14.

### 6.4.1 Equipment Summary

A typical complement of photographic equipment and accessories is listed in table 6-VII and depicted in figure 6-3. Miscellaneous operational equipment is also included in the figure. The three camera systems identified in the table are illustrated individually in figures 6-4, 6-5, and 6-6. Table 6-VIII lists crew-operated photographic equipment used for Apollo missions 14 through 17 and includes the types of lenses and film and a brief statement of usage for each item. These missions were characterized by an increasing scientific emphasis which resulted not only in the addition of new photographic equipment but also in a more diverse use of equipment. The expanded use is reflected in table 6-VIII.

### 6.4.2 Photographic Results

Photographs taken under operational conditions supported postflight anomaly analyses, vehicle documentation and inspection requirements, crew mobility studies, scientific evaluations, and equipment evaluations. Perhaps the most important photographs supported lunar sample documentation, lunar experiments location, and lunar terrain description, since photographs were the primary data source for satisfying lunar exploration objectives in these areas. The photographs also served the function of relaying to the scientific community and the public at large the exploration results in space and on the lunar surface, thereby sharing Apollo achievements with people throughout the world. Early photographs of the lunar surface during the lunar landing development missions served to update existing lunar maps. The revised maps were used extensively for crew familiarization and training in the actual types of lunar terrain that would be encountered. The improved maps were also used in selecting landing sites.

TABLE 6-VII.- TYPICAL PHOTOGRAPHIC EQUIPMENT COMPLEMENT FOR LATER APOLLO MISSIONS

| Item | Quantity | |
|---|---|---|
| | Command module | Lunar module |
| 16-mm sequence camera system: | | |
| Data acquisition cameras | 1 | [a]2 |
| Film magazines | 10 | [b]3 |
| 75-mm lens | 1 | |
| 18-mm lens | 1 | |
| 10-mm lens | 1 | 1 |
| Right-angle mirror | 1 | |
| Power cable | 1 | |
| Remote control cable | 1 | |
| Spare fuse | 1 | 2 |
| Mounting bracket | | 1 |
| 70-mm still camera system: | | |
| Electric camera | 1 | |
| Electric data cameras | | [c]3 |
| Film magazines | 8 | [b]15 |
| 60-mm lens | | 2 |
| 80-mm lens | 1 | |
| 250-mm lens | 1 | |
| 500-mm lens | | 1 |
| 20-sec intervalometer | 1 | |
| 8-sec intervalometer | 1 | |
| Polarizing filter | | 1 |
| [d]Ring sight | | 1 |
| 35-mm still camera system: | | |
| Camera body | 1 | |
| Film cassettes | 8 | |
| Film canisters | 7 | |
| 55-mm lens | 1 | |
| Polarizing filter | 1 | |
| Red filter | 1 | |
| Blue filter | 1 | |
| Mounting bracket | | |
| [e]Spotmeter | 1 | |

[a]Stowed in lunar module and transferred to lunar roving vehicle.

[b]Stowed in command module and transferred to lunar module.

[c]One long-focal-length camera used with a 500-mm lens; two electric data cameras used for lunar geology and crew operations documentation.

[d]Aiming device for long-focal-length camera.

[e]Light-measuring system.

Figure 6-3.- Typical Apollo photographic equipment complement.

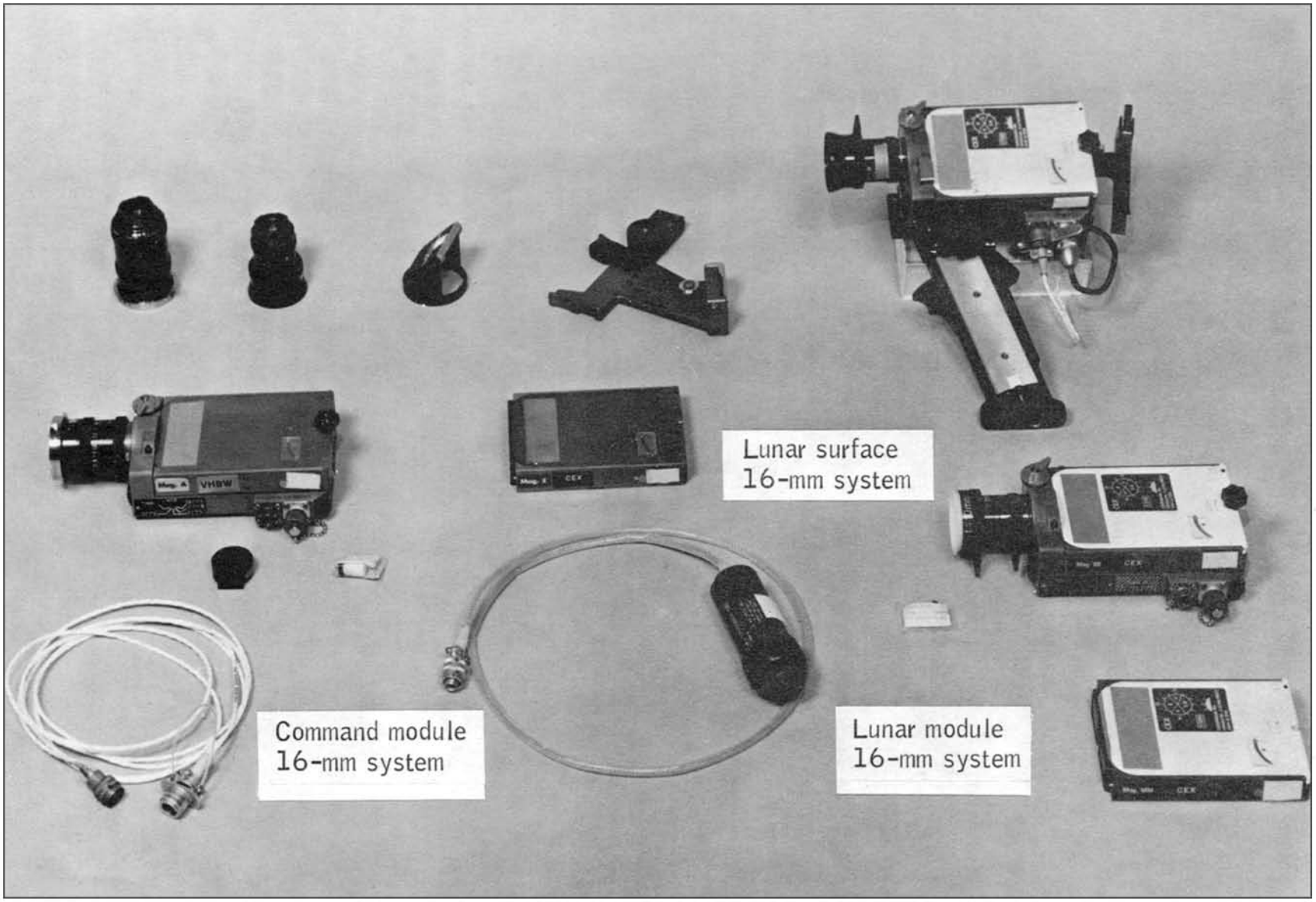


Figure 6-4.- The 16-mm sequence camera system.

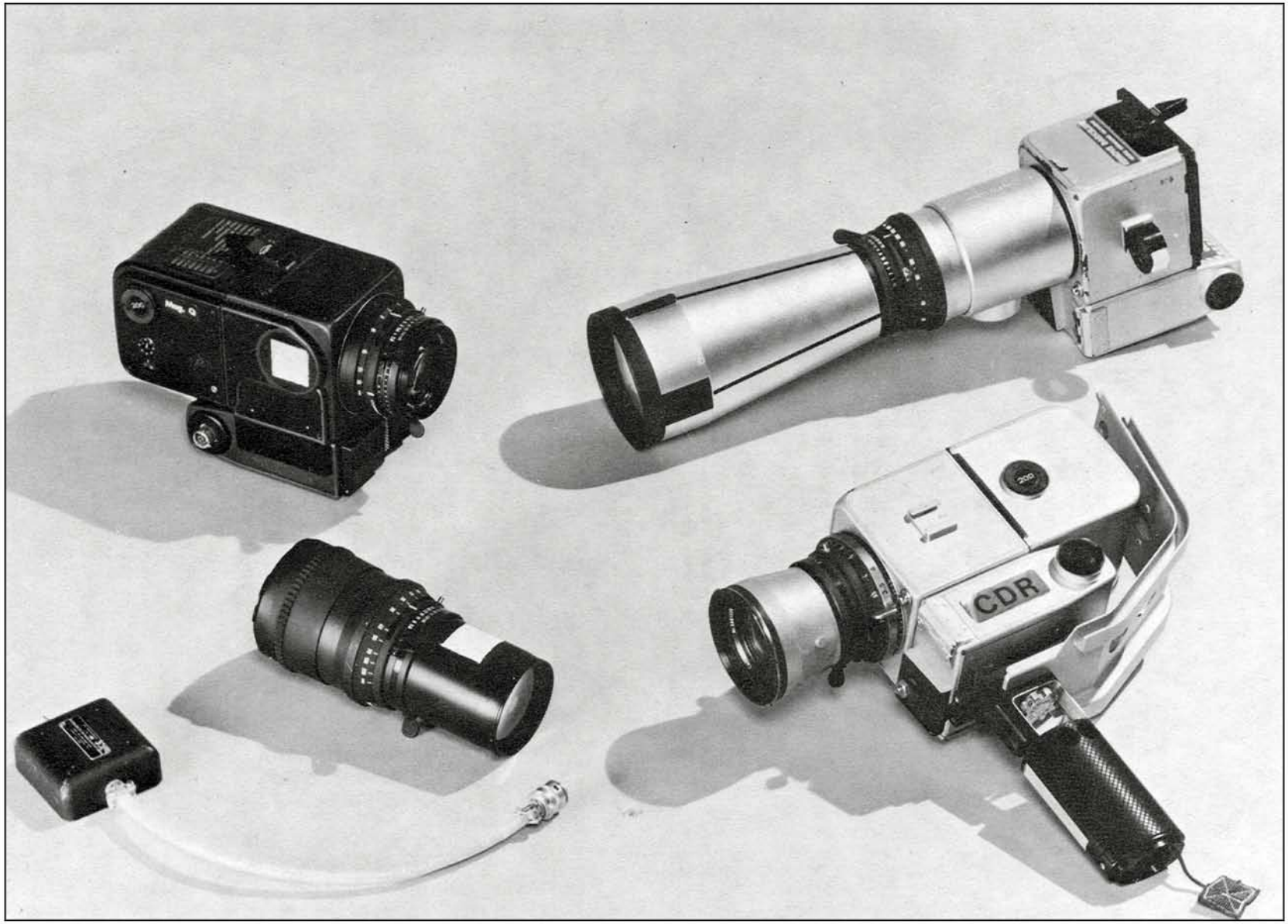


Figure 6-5.- The 70-mm still camera system.

Figure 6-6.- The 35-mm still camera system.

TABLE 6-VIII.- PHOTOGRAPHIC EQUIPMENT USAGE (APOLLO 14 THROUGH 17)

| Camera | Lens focal length, mm | Film type (a) | Usage or target |
|---|---|---|---|
| Apollo 14 | | | |
| Command module 70-mm electric | 80<br>500<br>250 | 3400<br>S0368<br>3400 | Transposition, docking, and undocking; inflight demonstrations; orbital science; landing sites; earth and moon |
| Command module 70-mm electric data | 80 | 3400<br>S0349<br>2485 | Zero phase; earthshine; stereographic strip of moon; visibility study |
| Command module 16-mm data acquisition | 18<br>5<br>10 | S0368<br>S0168<br>2485 | Transposition, docking, and undocking; landmark tracking; spacecraft interior; lunar dark side; Gegenschein; zodiacal light; galactic survey; earth entry |
| Command module 127-mm lunar topographic | 18 in. | S0349<br>3400 | Landing sites of follow-on missions |
| Lunar surface 70-mm electric data | 60 | S0168<br>3400 | Lunar geology documentation, lunar surface documentation, lunar module on surface, crew operations |
| Lunar module 16-mm data acquisition | 10 | S0368 | Lunar descent and ascent |
| Lunar surface 16-mm data acquisition | 5 | S0368 | Modular equipment transfer evaluation and lunar surface experiments traverse |
| Apollo 15 | | | |
| Command module 70-mm electric | 80, 250<br>500, 250<br><br>[b]105 | S0368<br>3414<br>2485<br><br>IIa-0 | Lunar eclipse; earth and moon; stereographic strip; solar corona; terminator; Gegenschein; transposition and docking; rendezvous; lunar orbit science; ultraviolet clouds, land, water, and earth; lunar horizon and features |
| Lunar surface 70-mm electric | 500 | 3401 | Panorama; geology and sample documentation; distant surface features |
| Lunar surface 70-mm electric data | 60 | 3401<br>S-168 | Geology and sample documentation; docking; panorama; lunar surface experiment documentation; lunar module; crew; scientific instrument module |
| Command module 35-mm | 55 | 2485 | Lunar surface in earthshine; terminator; zodiacal light; Milky Way; Gegenschein; lunar eclipse; lunar libration point |
| Command module 16-mm data acquisition | 18<br><br><br>Sextant adapter | 2485<br>S0168<br>S0368<br>S0368 | Solar corona; contamination; twist of mass spectrometer boom; transposition and docking; rendezvous; entry<br>Lunar surface from orbit |
| Lunar module 16-mm data acquisition | 10 | S0368 | Undocking; descent; lunar surface; ascent |
| Lunar surface 16-mm data acquisition | 75<br>10 | S0368<br>S0368<br>S0168 | Jettison of scientific instrument module door; launch of subsatellite; lunar roving vehicle traverse and evaluation; surface geology |

[a]3414 and S0349 — Slow-speed black and white.
3400 and 3401 — Medium-speed black and white.
2485 — Very-high-speed black and white.
S0168 — High-speed color exterior.
BW168 — High-speed black and white exterior.
S0368 — Medium-speed color exterior.
IIa-0 — Ultraviolet spectroscopic.

[b]Ultraviolet.

TABLE 6-VIII.- PHOTOGRAPHIC EQUIPMENT USAGE (APOLLO 14 THROUGH 17) - Concluded

| Camera | Lens focal length, mm | Film type (a) | Usage or target |
|---|---|---|---|
| Apollo 16 | | | |
| Command module 70-mm electric | 80<br>250<br>[b]105 | 2485<br>3401<br>S0168<br>S0368<br>IIa-0 | Window calibration for solar corona; moon; earth; electrophoresis; orbital science; lunar module inspection; ultraviolet earth and moon; lunar terrain, maria, and horizon |
| Lunar surface 70-mm electric data | 60<br>500 | S0168<br>3401 | Geology sample documentation; lunar surface experiment layout data; lunar module; distant lunar features |
| Command module 35-mm | 55 | 2485<br>S0168 | Gegenschein; galactic; Gum Nebula; zodiacal light; earthshine; contamination; light flash moving emulsion detector position data |
| Command module 16-mm data acquisition | 18<br>10<br>18<br>75 | BW168<br>S0168<br>2485<br>S0368 | Twist of mass spectrometer boom; food evaluation; intravehicular transfer; solar corona; contamination; transearth extravehicular operations; transposition and docking; lunar module inspection; rendezvous; landmark tracking; entry |
| Lunar module 16-mm data acquisition | 10 | S0368 | Lunar module descent, ascent, and docking |
| Lunar surface 16-mm data acquisition | 10 | S0368 | Lunar roving vehicle traverse; crew mobility; soil dynamics |
| Apollo 17 | | | |
| Command module 70-mm electric | 80<br>250 | S0368<br>2485 | Undocking; ejection; lunar module inspection; rendezvous; docking; earth and moon; orbital science; solar corona; stereographic strip; contamination |
| Lunar surface 70-mm electric | 60<br>500 | S0368<br>3401 | Geology sample documentation; surface panorama; lunar surface experiment deployment; soil mechanics; lunar module inspection; distant features |
| Command module 35-mm | 55 | S0168<br>2485 | Light flash moving emulsion detector position data; zodiacal light; galactic; lunar libration point; lunar surface in earthshine; dim-light phenomena |
| Command module 16-mm data acquisition | 75<br>18<br>10 | S0368<br>S0168<br>2485 | Transposition and docking; undocking; rendezvous; lunar module inspection; scientific instrument module door jettison; Command Module Pilot extravehicular activity; heat flow demonstration; comet; contamination; intravehicular operations; lunar strip photography; entry; parachute deployment |
| Lunar module 16-mm data acquisition | 10 | S0368 | Lunar descent; surface activity; lunar ascent; rendezvous |

[a]3414 and S0349 — Slow-speed black and white.
3400 and 3401 — Medium-speed black and white.
2485 — Very-high-speed black and white.
S0168 — High-speed color exterior.
BW168 — High-speed black and white exterior.
S0368 — Medium-speed color exterior.
IIa-0 — Ultraviolet spectroscopic.

[b]Ultraviolet.

On each of the lunar landing missions, an average of approximately 3400 frames of 70-millimeter film, 2000 feet of 16-millimeter film, and 250 frames of 35-millimeter film were exposed. The 35-millimeter photographs supported, primarily, dim-light phenomena for the Apollo 16 and 17 missions, and a limited number of 127-millimeter photographs were taken for the Apollo 14 mission.

Several examples of crew photography are included in this section. In addition, crew photographs are used in other sections of this report. Of the many examples of long-range photography from lunar orbit that are available, figures 6-7 and 6-8 were selected as being typical. Figure 6-9 was taken of the fully illuminated moon just after the Apollo 17 transearth injection.

### 6.4.3 Conclusions

Crew photography was a primary source of data for the Apollo program and provided documentation of vehicle conditions and dynamics, crew operations, celestial phenomena, lunar surface features and geology, and surface experiment location data. The following conclusions are drawn from the Apollo experience.

With one exception, all photographic objectives were met with the operational camera systems even though occasional problems required a second attempt in obtaining the data. The exception was an instance in which high-resolution photographs of Descartes were not obtained because of a transistor failure in the primary camera system seconds before the primary photographic site was reached. The Descartes data, however, were obtained with a backup camera and were of sufficient resolution to meet minimum objectives.

The complement of camera equipment and lenses was properly selected to meet mission requirements and was obtained within budget guidelines. The use of professional quality commercial equipment, when available in the format sizes required and with minor modification to meet space environmental criteria, was an adequate approach which resulted in quality photography at minimum cost.

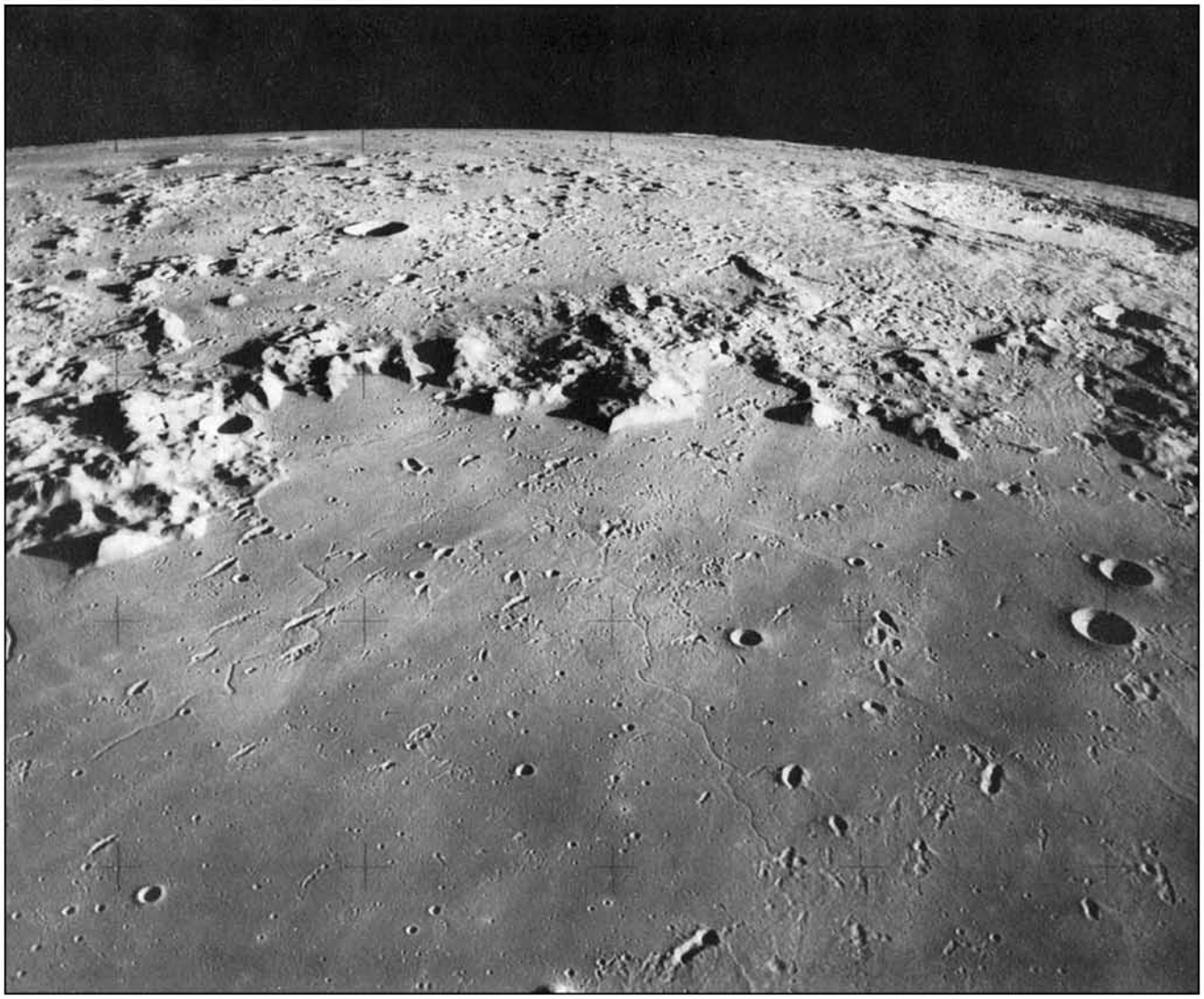

Figure 6-7.- View of lunar surface taken from command module on Apollo 17.

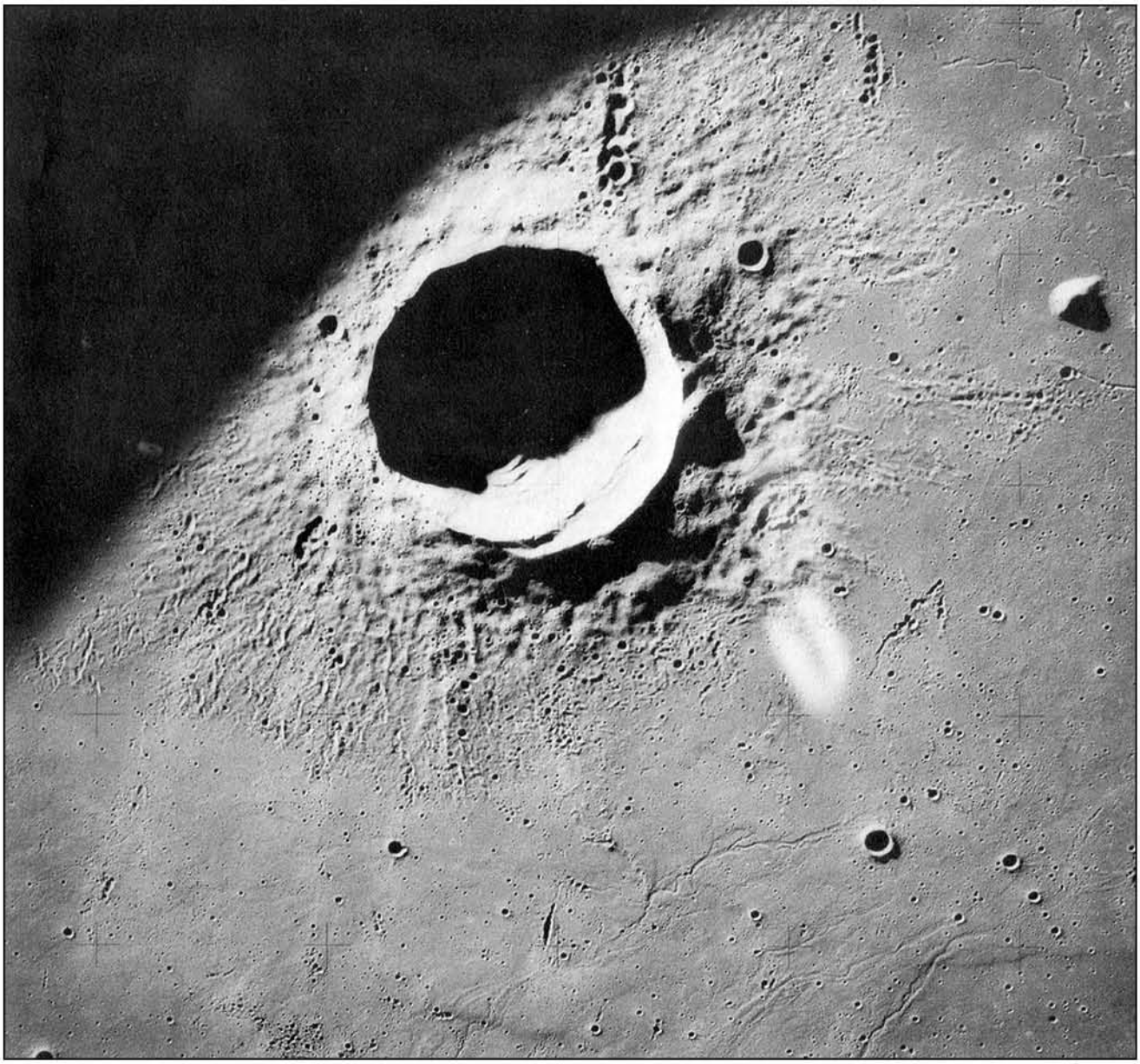

Figure 6-8.- View of lunar surface as taken from command module.

Figure 6-9.- View of fully illuminated moon taken after transearth injection on Apollo 17.

## 6.5 REFERENCES


6-1. Apollo 7 Mission Report. NASA Johnson Space Center Report MSC-PA-R-68-15, December 1968.

6-2. Apollo 8 Mission Report. NASA Johnson Space Center Report MSC-PA-R-69-1, February 1969.

6-3. Apollo 9 Mission Report. NASA Johnson Space Center Report MSC-PA-R-69-2, May 1969.

6-4. Apollo 10 Mission Report. NASA Johnson Space Center Report MSC-00126, August 1969.

6-5. Apollo 11 Mission Report. NASA SP-238, 1971.

6-6. Apollo 12 Mission Report. NASA Johnson Space Center Report MSC-01855, March 1970.

6-7. Apollo 13 Mission Report. NASA Johnson Space Center Report MSC-02680, September 1970.

6-8. Apollo 14 Mission Report. NASA Johnson Space Center Report MSC-04112, May 1971.

6-9. Apollo 15 Mission Report. NASA johnson Space Center Report MSC-05161, December 1971.

6-10. Apollo 16 Mission Report. NASA Johnson Space Center Report MSC-07230, August 1972.

6-11. Apollo 17 Mission Report. NASA Johnson Space center Report JSC-07904, March 1973.

6-12. Woodling, C. H.; Faber, S.; Van Bockel, J. J.; Olasky, C. C.; et al.: Simulation of Manned space Flight for Crew Training. Apollo Experience Report, NASA TN D-7112, July, 1972.

6-13. O'Neil, J. W.; Cotter, J. B.; Holloway, T. W.: Flight Planning for Manned Space Operations. Apollo Experience Report, NASA TN D-6973, January 1972.

6-14. Kuehnel, H. A.: Photographic Equipment and Operations During Manned Space-Flight Programs. Apollo Experience Report, NASA TN D-6972, September 1972.

6-15. Flight Crew Integration Division: Handbook of Pilot Operational Equipment for Manned Space Flight. MSC-07210, June 1972.

# 7.0 MISSION OPERATIONS

Apollo mission operational activities encompassed several diversified support disciplines. The largest number of supporting personnel were located at the NASA Manned Spacecraft Center in Houston, Texas; numerous other supporting organizations were located throughout the United States and the world. All organizational elements functioned as a unified team during a mission, with some elements remaining active until a postflight report of the mission had been published and all conditions causing anomalous performance of the mission hardware had been resolved. This section summarizes the activities of the major support disciplines and gives examples of the problems encountered.

## 7.1 MISSION CONTROL

The basic objectives and responsibilities of mission control were established in previous manned space flight programs. In the Apollo program, the flight control team continued its primary role in trajectory determination, maneuver computation, overall spacecraft systems evaluation, and crew assistance as required. The capabilities involved in mission control were intended to aid the crew in accomplishing the mission objectives and to preserve crew safety under normal and contingency conditions. Even though the objectives remained unchanged, the role and capability of mission control increased throughout the program to meet the additional requirements of each new mission.

### 7.1.1 Mission Control Center

The focal point for ground-based Apollo mission operational activities was the Mission Control Center located at the NASA Manned Spacecraft Center. The Mission Control Center contains two identical mission operations control rooms (fig. 7-1). Either can be used, or in some circumstances, they can be used simultaneously. The mission operations control room provided the working space for three basic groups of flight controllers: mission command and control, systems operations, and flight dynamics. Each group was assigned a nearby staff support room (fig. 7-2) where data on the missions were monitored and analyzed in detail. Other support areas within the facility included a meteorological room, a spacecraft planning and analysis room, a recovery operations control room, and a lunar surface experiments package support room. The consoles at which the flight controllers worked in the mission operations control room, and those in many of the support rooms, included one or more television screens and the necessary controls to display data on a number of different channels. The data could be the same as that displayed on large screens on the front wall of the mission operations control room, or other data could be "called up" by changing channels. Static information was obtained from a library of reference data, while digital-to-television display generators provided constantly changing data.

A real-time computer complex on the first floor of the Mission Control Center processed incoming tracking and telemetry data and compared actual mission conditions with predetermined parameters. Of five primary computers in the real-time computer complex, two were used to support one mission operations control room, and two were used for the other. The fifth served as a backup, or could be used to develop and perfect computer programs.

Another facility on the first floor that was essential to the success of a mission was the communications, command and telemetry system. The system processed the incoming digital data and distributed it on a real-time basis to the mission operations control room and support rooms for display. The system also handled the digital command signals to the spacecraft.

Another important facility was the voice communications system. It enabled the flight controllers to talk to one another without having to leave their consoles, and it connected them to the specialists in the support rooms, to flight crew training facilities where specific procedures could be tried out on spacecraft simulators before they were recommended to the mission crew, and to personnel along the Manned Space Flight Network. It also provided the voice link between the control center and the spacecraft.

Figure 7-1.- Mission operations control room during Apollo 14 docking operations.

Figure 7-2.- Typical staff support room.

A separately located simulation checkout and training system enabled flight controllers in the Mission Control Center and flight crews in spacecraft simulators at the Manned Spacecraft Center and the Kennedy Space Center to rehearse a particular procedure or even a complete mission. The system even simulated voice and data reception from the far-flung stations of the Manned Space Flight Network.

### 7.1.2 Emergency Power Building and Backup Facility

The Mission Control Center was supported by an emergency power building which housed generators and air conditioning equipment, and was backed up by a secondary Mission Control Center at the Goddard Space Flight Center.

7.1.2.1 Emergency power system.- Electrical power is distributed to the Mission Control Center and within the emergency power building by either a "category-A" or "category-B" distribution system (fig. 7-3). Category-A power is defined as the uninterruptible power supplied to all critical loads in the Mission Control Center. The power is generated in the emergency power building for two separate electrical buses which are electrically isolated from the commercial power system and from each other. Category-B power is defined as interruptible power supplied to all loads other than the category-A power loads in the Mission Control Center. Under normal operating conditions, the category-B power is supplied by commercial power; however, when a commercial power failure occurs, the category-B power is generated in the emergency power building by two diesel generators which start picking up the load within 25 seconds after the commercial power failure. Depending upon conditions, the category-A power generating system is capable of operating in any one of three different modes.

a. Mode 1. During normal operation in which the commercial power system is intact, category-A power is obtained from a 350-kilowatt electric motor-generator and a 350-kilowatt diesel generator operating in parallel with each other. The diesel generator and motor-generator each supply approximately one-half of the load to the appropriate A bus. Either generator is capable of assuming the full load upon failure of the other. A third 350-kilowatt diesel generator acts as the standby or "swing" generator and is capable of being substituted for any of of the category-A power generators.

b. Mode 2. During periods in which the commercial power system supply has been interrupted or has failed, both electric motor-generators cease to operate and the diesel generators temporarily assume the full load for the category-A power system. As soon as the category-B power system generators have started, the category-A power system electric motor-generators are manually restarted and are operationally powered by the category-B power generators.

c. Mode 3. During periods in which one of the category-B buses has been removed from service, the respective category-A system electric motor-generator that was receiving power from the bus ceases to operate. The standby diesel generator then operates in parallel with the operating diesel generator to provide uninterruptible power to the A bus. The remaining A bus operates normally with the electric motor-generator operating in parallel with the diesel generator.

Depending upon conditions, the category-B power generating system is also capable of operating in any one of three modes.

a. Mode 1. During normal operation in which the commercial power system is intact, each of the B buses receives power from the commercial power system through step-down transformers located on a substation pad adjacent to the emergency power building.

b. Mode 2. During periods when the commercial power system supply has been interrupted or has failed, the B buses are tied together through bus-tie circuit breakers and the entire category-B system load is supplied from two 1360-kilowatt diesel generators. Each generator is capable of automatically starting and synchronizing with the other generator, and, as previously mentioned, can begin to supply system power to the B buses within 25 seconds. A third 1360-kilowatt diesel generator is provided as a standby unit capable of being substituted for any one of the 1360-kilowatt generators.

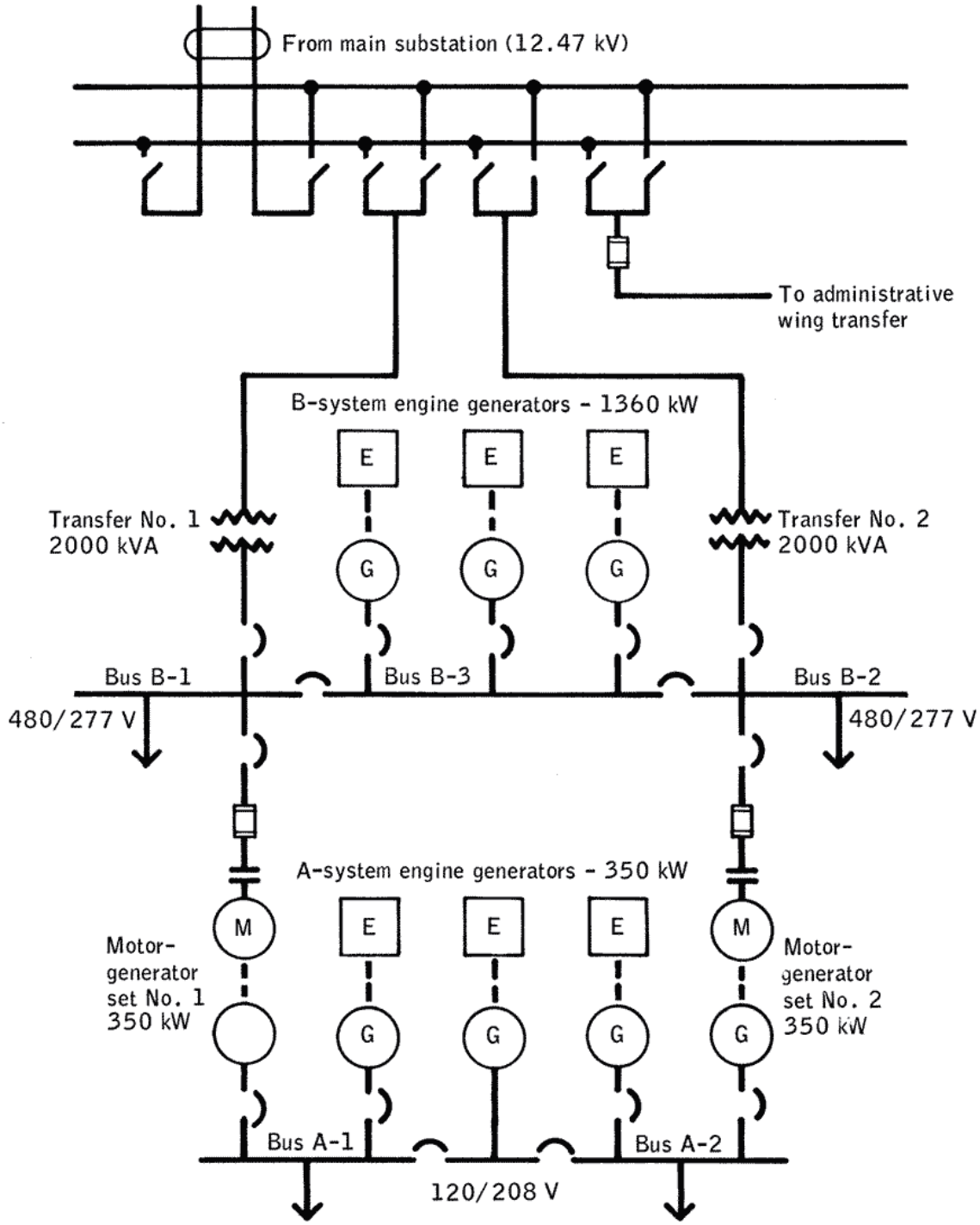


Figure 7-3.- Mission Control Center power system.

c. Mode 3. During periods when one of the substation pad transformers becomes inoperative because of failure or a maintenance requirement, category-B buses may be tied together and power supplied from the remaining transformer and one diesel generator operating in parallel. If one of the B buses is out of service, the loads on that bus may be manually transferred to the other B bus and the entire category-B power load supplied from the remaining operational transformer and one diesel generator operating in parallel.

7.1.2.2 Emergency lighting system.- A battery-operated emergency lighting system in the emergency power building is also provided for the safety of personnel in the event of a total power failure. Should a power failure occur, the emergency lighting system will automatically switch on and supply power to light fixtures strategically located in each area and in the corridors.

7.1.2.3 Emergency cooling system.- The emergency air conditioning equipment for the Mission Control Center consists of two 700-ton water chillers, a 70-horsepower heating boiler, circulating pumps, heat exchangers, automatic controls, and accessories. A cooling tower, erected adjacent to the emergency power building, provides condensing water to the chillers and jacket cooling water to the diesel engine power generators.

7.1.2.4 Secondary Mission Control Center.- If an unforeseeable failure had prevented the Control Center from continuing its support of a flight, an emergency facility at the Goddard Space Flight Center in Greenbelt, Maryland, could have been activated. The emergency center was a stripped-down version of the one in Houston, incorporating just enough equipment to let the controllers support the flight to its conclusion.

### 7.1.3 Mission Control Functions

7.1.3.1 Unmanned flights.- Unmanned test flights for design verification of critical flight equipment were relatively short, and only specific flight conditions had to be satisfied. Because execution of these flights was controlled mainly by the onboard guidance and navigation system, the mission control function was limited. A real-time interface, however, did exist with the Mission Control Center through the communications system, which provided up-link transmission, telemetry, and tracking capability. Thus, the flight control team had the capability to adjust flight events and control systems operation to ensure that system evaluation requirements were met. This control was used during the Apollo 6 mission when the S-IVB stage of the launch vehicle failed to restart, as planned, after achieving earth orbit. Through up-link commands, the flight control team commanded ignition of the service propulsion system to achieve an alternate trajectory that satisfied the mission objective.

7.1.3.2 Manned flights.- With the first manned flight (Apollo 7), mission complexity and duration increased. Likewise, the scope of mission control operations was expanded, and execution of additional and more complex duties demanded greater preparation and training of the flight control team. The value of this comprehensive preparation was demonstrated when development of contingency plans was necessitated by the Apollo 13 cryogenic oxygen tank failure. As the program progressed, each flight presented new objectives which required additional ground support capability. Objectives such as translunar injection and high-speed entry on Apollo 8, dual spacecraft operations and actual rendezvous on Apollo 9, lunar-orbit insertion and transearth injection on Apollo 10 and, finally, the actual lunar landing on Apollo 11 all required specialized support. Also required with each additional activity were new data computation capabilities, monitoring techniques, operating procedures for normal and contingency events, and new system operational criteria. With the successful completion of the Apollo 11 mission, all major lunar landing mission events had been accomplished; however, modifications were made to improve the execution techniques or to provide increased capability. For example, the accuracy of the Apollo 11 lunar landing was degraded by a position navigation error. To compensate for such degradation, a technique was developed to bias the Apollo 12 landing target point during the descent maneuver by a differential distance equivalent to the position error. When the mission control team observed the error from radar tracking, the required bias was provided to the crew by voice transmission.

7.1.3.3 Dual-vehicle operation.- Several new operational changes were required of the mission control team for dual-vehicle operation. Although dual-vehicle operation had been introduced on the Gemini program when two spacecraft first accomplished rendezvous, the Apollo operation was unique because the configuration of the two spacecraft was vastly different: each was designed for a special function. The vehicle differences required additional flight controller positions and modification of other positions in the Mission Control Center to accommodate data display and to allow separate systems evaluation and support for each spacecraft. The increased level of activity and the limitations in the ground data-processing equipment required a cooperative operating discipline within the Mission Control Center for the support of two active vehicles. Special procedures were adopted to maintain coordination between responsible stations for such operations as up-link transmissions to each spacecraft, high-speed data format selection, and non-real-time data retrieval. Throughout the critical phases of lunar module descent and ascent, the number of available television displays was decreased to reduce the workload on the real-time computer complex. The remaining number was allocated by console position to ensure distribution of mandatory monitoring data. Mission control was essentially split into two operational divisions to manage the high activity of dual-vehicle support. Each division had a separate flight director and spacecraft communicator supporting an individual spacecraft.

7.1.3.4 Lunar operation.- Another change in mission control for the Apollo program was the operation in the lunar environment. Because the spacecraft were operating at much greater distances from earth, emphasis was placed on maintaining the mission abort and return capability. Also, spacecraft systems management and evaluation became more critical. Before executing each major lunar mission event, the systems status was verified to satisfy required minimum capability. For example, the service propulsion system control integrity was in question before the Apollo 16 lunar orbit circularization maneuver (ref. 7-1). Consequently, a delay of the lunar landing was necessary to understand the malfunction fully and to ascertain the remaining capability, even though the landing conditions and subsequent surface activities would be affected.

Precision trajectory management was required to achieve the desired conditions for all lunar landings. The effects of spacecraft attitude thruster firings and the lunar gravitational variations introduced errors in predicted trajectories. The thruster effects were minimized by adjusting the planned spacecraft activities so that attitude maneuvers during the critical tracking intervals were avoided. The development of improved lunar gravitational potential models and navigation biasing techniques compensated for the gravitational effects. As each lunar mission was accomplished, more knowledge was gained to provide greater confidence in maintaining predicted lunar mission trajectories.

The initial lunar landing, Apollo 11, initiated still another expansion to mission control operations. In previous flights, the mission control objective had been to verify the equipment and techniques required to place man on the moon. For Apollo 11 and subsequent missions, the operational objective was expanded to include the scientific exploration of the lunar surface. To achieve the lunar surface extravehicular activity objectives, mission control served as the interface between the flight crew and the ground-based scientific investigators. In this role, mission control assumed responsibility for the real-time management of experiment deployment, traverse planning, sample collection, surface photography, and experiment data retrieval. Additional operational support was provided to monitor and evaluate the status and performance of surface equipment such as the extravehicular mobility unit and the lunar roving vehicle. This capability also provided general crew assistance in manipulating the lunar roving vehicle television camera and in recording such data as sample container numbers, film magazine codes, and crew observational comments. The management of and data retrieval from the Apollo lunar surface experiments package central station and associated experiments was unique for mission control because of this activity extended beyond the end of the mission. Between missions, a small segment of the mission control team continued active support of the Apollo lunar surface experiments from previous missions by collecting and distributing instrument observation data. In addition, uplink commands were sent to manage some of the instrument packages on the lunar surface. Beginning with the Apollo 15 mission, science support was again expanded to include operations of lunar orbital experiments. A special mission control function was established to manage the time-line execution and real-time evaluation of the crew-operated equipment. Assistance was provided to the crew in management of equipment configuration and on-off operating time.

### 7.1.4 Concluding Remarks

In summary, mission control maintained a flexibility of operation to support the program requirements. Although the basic intent remained constant, mission control capabilities and responsibilities expanded as required to support the variety of missions undertaken.

## 7.2 MISSION PLANNING

### 7.2.1 Trajectory Design

Initial mission planning and trajectory design early in the Apollo program transformed the broad lunar landing objectives into a standard mission profile and sequence of events against which the many spacecraft systems could be designed. Preliminary trajectory design, like the spacecraft hardware design, was developed from specified objectives within a framework of system functional characteristics and mission operational constraints. The process consisted of a series of iterative cycles in which the basic lunar mission trajectory was increasingly refined as the program progressed and as the flight hardware and operational planning became more definite.

As might be expected, incompatibilities arose between system capabilities and trajectory performance requirements which necessitated tradeoff studies so that compromises could be reached. In this respect, trajectory design activity was one of the primary means of achieving the overall systems integration on which the success of the program rested. As hardware designs became final, the trajectory design was more operationally oriented to conform to the expected capabilities of the spacecraft and ground support equipment.

The final mission design effort occurred largely in the year preceding each launch and involved the development of an operational trajectory and the associated detailed procedures, techniques, mission rules, and flight software. The operational documentation and data were used by the flight crew and ground control personnel for both nominal and contingency trajectory control and monitoring. The major problems encountered in the design of the various Apollo trajectories were not as technical as they were accommodative to the myriad user requirements, hardware and launch schedules, and the presentation of the proper data formats.

Another area in which problems were more bothersome and time consuming than they were technically difficult was that of designing the trajectory and providing associated data to overcome systems limitations, particularly those discovered immediately before launch, and accommodating last-minute changes. Trajectory engineers demonstrated a great deal of ingenuity, for example, when retargeting was required on several of the earlier missions and when a precision lunar landing was dictated on later missions. In the latter case, a new technique of updating the target vector in the onboard computer during the actual descent maneuver was very successful.

Early in the trajectory design effort, the need became apparent for some type of configuration control to ensure that all elements were using the same systems performance parameters. The proposal for a data management system to provide this necessary control was accepted and resulted in the production of the Spacecraft Operational Data Book. This document, with its continuous updates, and the data management elements in other organizations provided a common data base for all users.

In the early stages of the program, much more effort was devoted to planning for contingencies than to planning the nominal trajectory. This fact was also true for the two previous programs. As more confidence was gained in the systems performance and the basic trajectory design techniques, the concentration of effort on contingencies was somewhat reduced. The effort toward contingency planning was not wasted, however, since the ability of trajectory design engineers to respond rapidly to the Apollo 13 emergency was instrumental in returning the crew safely to earth.

### 7.2.2 Consumables

During the early Apollo mission planning, the need for a single authoritative consumables data source became apparent. A consumables analysis group was therefore chartered to define all major consumables data for the spacecraft. The trajectory design team was given this responsibility because of the close relationship of trajectory design to overall mission planning and systems functional performance, which included consumables usage.

### 7.2.3 Lunar Landing Site Selection

Lunar landing site selection was a complex process which involved technical tradeoffs among diverse interests. The scientific considerations were balanced against the system capabilities by a Site Selection Board and a recommendation was then made to agency management where the final selection was made. The trajectory design team provided inputs to the Site Selection Board on the suitability of several candidate sites for a given mission based upon operational considerations such as the translation of spacecraft performance capability into accessible areas on the lunar surface. The accessible areas were then correlated with the candidate landing sites to determine which sites were available. Reference 7-2 describes in detail the site selection process and the various trade-offs required.

Among the various organizations responding to the Site Selection Board on the acceptability of the various sites, trajectory design personnel probably appeared to be one of the least conservative. This lack of conservatism probably stemmed from the fact that numerous proven analytical tools and trajectory shaping techniques provided great confidence in the face of new mission requirement uncertainties. For example, without these tools and the wealth of mission planning experience, the scientifically valuable Taurus-Littrow site probably could not have been approved for the Apollo 17 mission. Based on the accuracy of both the lunar and the earth landings, the tools and techniques were demonstrated to be effective, and the recommendations made to the Site Selection Board regarding site accessiblity were timely and correct.

### 7.2.4 Documentation

Because of numerous inputs that influenced the trajectory design and because of the many users of operational trajectory data, adherence to a strict control procedure was necessary to provide the trajectory design within the time constraints of the program. To determine and define the proper input data and to provide the data on schedule, a mission documentation plan was established which integrated the various requirements of the organizations involved in the flight planning and the actual operations. This documentation plan defined the types of data required and specified the established user need dates so that publication of final trajectory data would be timely. The plan included the standard time, position and velocity trajectory information, as well as specific information such as tracking station data, attitude data, contingency data, dispersion analyses, consumables analyses, simulator input data, and onboard crew charts. References 7-3 through 7-12 are representative documents.

## 7.3 MANNED SPACE FLIGHT NETWORK

The initial support of the Apollo program by the Mission Control Center/Manned Space Flight Network (later called the Spaceflight Tracking and Data Network) began during the terminal phases of the Gemini program with the three short orbital flights of Apollo missions AS-201, AS-202, and AS-203. These unmanned flights were supported with the ground systems hardware and software used in the Gemini program. Systems such as the unified S-band communications equipment, which were to become well known in the Apollo program, were in their infancy and were used only on a ground systems test basis. Remote control from the Houston Mission Control Center was almost nonexistent, and the flight controllers were sent to many of the Manned Space Flight Network stations to support each flight.

### 7.3.1 Command Systems

The radio-frequency communications links between the ground and the Apollo spacecraft were similar to those of the Gemini program and used the 1-kilohertz/2-kilohertz phase-shift-keyed modulation techniques; however, the equipment for command generation differed. A computer-operated digital command system was used for Gemini flights and the first three Apollo flights in which command execution from the Mission Control Center was limited to special interfaces with three range stations through the use of a down-range up-link system. The commands to be transmitted to the spacecraft were transferred from the master digital command system in Houston through commercial carrier facilities to a station down-range up-link system which in turn provided the radio-frequency modulation to the spacecraft. At remote stations, such as Guaymas, Mexico, and Canarvon, Australia, flight control teams sent from Houston used station digital command systems to execute the commands.

The main-line Apollo program was to provide a different operation. The computer had matured, as had the use of digital communications. While radio-frequency modulation remained the same, modified 642B computers replaced the digital command system. Up-link commands were no longer transmitted directly from Houston. Each remote station computer was programmed with unique command words, and the execute decision from the Mission Control Center became requests for the preprogrammed command words. Additionally, the Mission Control Center was no longer limited to command execution through three stations because 13 prime range stations within the Manned Space Flight Network were linked to a 494 computer in Houston by a similar 494 computer at the Goddard Space Flight Center in Greenbelt, Maryland.

Modulation techniques remained the same; however, the radio-frequency link changed. Gemini and early Apollo missions were conducted in near-earth orbit, using an ultrahigh-frequency command system. To communicate effectively at greater than near-earth orbital distances, the Apollo program used a unified S-band system, and the up-link commands became an integral part of that system with commands modulating a 70-kilohertz subcarrier.

The practice of sending flight control teams to selected remote stations to execute commands and monitor telemetry was gradually discontinued. Confidence was established in the new system, and the Apollo 7 mission was supported with all the flight control personnel being located at the Manned Spacecraft Center and operating with a totally remote Manned Space Flight Network.

After the Apollo 7 mission, the command system configuration remained relatively unchanged. The only significant change was the adoption of the universal command system concept with the Mission Control Center complex during the later lunar missions. The universal command system increased system flexibility by providing the capability to execute real-time commands from any command panel by means of a thumbwheel selection. Until this time, real-time commands were individually selected by unique pushbutton indicators at specific consoles. Previously, if a specific console was not functioning, command capability for the discipline controlled from that console was lost. The universal command system allowed the flight controller to move to another console or to have someone else execute his command if his console malfunctioned.

### 7.3.2 Telemetry Systems

Telemetry, like the command system, was subjected to major changes. Only two sources of real-time digital telemetry existed at the Manned Spacecraft Center for the initial Apollo flights. The primary source came from the Kennedy Space Center and was known as the Gemini launch data system (later called the Apollo launch data system). The data were received on ultrahigh-frequency links, decommutated, sent to the data core system at Kennedy Space Center, and than transmitted to Houston at a 40.8-kilobit rate. The only other digital source was a 2.0-kilobit link from Bermuda. Real-time telemetry from the remaining Manned Space Flight Network stations was limited to critical events and was transmitted by frequency modulation on voice-quality long-line circuits. The primary method for providing telemetry data to the Manned Spacecraft Center was via teletype. Down-linked data received at the Manned Space Flight Network stations were decommutated and routed into 1218-type computers. Selected parameters were then extracted from the computer, on manual request, in teletype format and transmitted to the Manned Spacecraft Center. At the Mission Control Center, the teletype telemetry data were routed to the real-time computer complex for processing. After processing, summary messages were transmitted from Houston to the remote stations so that the onsite flight controllers would know the vehicle status before an upcoming pass over the range station.

With the availability of 642B computers, a different and more suitable system was developed. All the data were now decommutated, sent to the 642B computers, and formatted for digital output to the Mission Control Center in the same manner that commands were sent to the range stations. Two 2.4-kilobit lines from each range station to the Goddard Space Flight Center provided digital data in real time. Each line was dedicated to a selectable telemetry format. Each format contained specific data from a certain vehicle or vehicles, and the format was selectable by either the Mission Control Center or the remote station. The link between the Mission Control Center and the Goddard Space Flight Center consisted of two 40.8-kilobit lines and could provide data from multiple stations to the Mission Control Center, thereby providing either redundant data from one vehicle or data from multiple vehicles during periods when the vehicles were separated. These data were received and decommutated by 494-type computers at the Manned Spacecraft Center and transferred to either the real-time computer complex, the telemetry ground stations, or directly to console event lights. This configuration was used until the Apollo 15 mission, when the data rate of the lines was increased to 4.8 kilobits. At this time, the two telemetry formats were transmitted on one line only, and the second line was used for the transmission of digital biomedical data. Also at this point, frequency-modulated telemetry - the last of the Gemini systems - became a backup system to be used only in a contingency mode.

### 7.3.3 Tracking Systems

As was the case with the command and telemetry systems, tracking systems needed significant upgrading to provide adequate support for the Apollo program. Although, unlike other systems, the Gemini systems, for the most part, were retained. A significant change, however, was the use of the unified S-band system as a source of trajectory data. During the Gemini program, the primary source of trajectory data was C-band radar. To support Apollo, something else was needed because C-band radar, like ultrahigh-frequency and very-high-frequency telemetry, was serviceable only in earth orbit.

Ground systems processing of the resultant unified S-band trajectory data remained relatively unchanged. Teletype was still the method used to transmit the trajectory information and, although the computers involved were of a new generation, the software programs accomplished the same tasks.

### 7.3.4 Communications Systems

The communications systems, although often overlooked, probably underwent the most significant reconfiguration. The communications for the Gemini Manned Space Flight Network consisted primarily of voice and teletype circuitry used in a postpass or near-real-time fashion. The Apollo program required that digital data be routed to Houston in real time; voice communication with the spacecraft was no longer the responsibility of an on-station flight control team but required routing to a single point in the Mission Control Center; and television from the lunar surface was relayed to Houston from Madrid, Spain, Honeysuckle Creek, Australia, and Goldstone, California. Each change in a data system or the addition of a new system constituted a similar change in the communications system.

In the Gemini program, the communications network consisted of facilities leased from various commercial carrier companies. These facilities consisted of landline, submarine cable and microwave systems; the latter being avoided whenever possible because of uncertain reliability. The required circuitry, circuit reliability, and circuit quality for Apollo increased an order of magnitude over those of Gemini. Contributing to the overall improvement was the shift from the use of submarine cables to communications satellites for global communications.

## 7.4 RECOVERY OPERATIONS

The decision to use the water-landing mode for the Apollo program allowed the basic recovery concepts and techniques developed during the Mercury and Gemini programs to be retained. Although these concepts and techniques were generally applicable, the recovery requirements resulting from flying a new spacecraft on a translunar trajectory necessitated the development of some new recovery force deployment concepts and also the development of specialized equipment, tools, and procedures. The aspects of recovery unique to the Apollo program are discussed.

### 7.4.1 Department of Defense Support

In consonance with the intent of the National Aeronautics and Space Act of 1958, existing Department of Defense resources were integrated into the Apollo program where possible to avoid unnecessary duplication of effort, facilities, and equipment. Department of Defense support responsibilities were assigned in the areas of launch and recovery operations, communications, medicine, meteorology, and public affairs. Personnel support ranged from approximately 4000 for the AS-201 mission to more than 9000 for the Apollo 8 mission. The greater portion of this support was for recovery operations. For a manned mission, the major recovery responsibilities entailed locating the command module; providing on-the-scene assistance to the crew if necessary; retrieving the crew and command module; and providing for the return of the crew, lunar samples, data, and equipment.

### 7.4.2 Recovery Posture

7.4.2.1 Earth orbital missions.- A four-zone recovery concept was used for the Apollo 7 and Apollo 9 manned earth orbital missions. Two zones were located in the Atlantic and two in the Pacific Ocean areas. The West Atlantic zone contained the primary landing area, which was supported by an aircraft carrier. Secondary landing areas, supported by destroyers and ships of similar capability, were located within or near all four zones.

7.4.2.2 Lunar missions.- The recovery posture for the lunar missions differed from that of the earth orbital missions in several ways. The concepts and support provided are perhaps best discussed as they relate to specific types of landing areas defined for different mission phases.

a. Launch phase. As in the previous manned space flight programs, recovery forces were deployed in the so-called launch site area to rescue the crew if it had been necessary to initiate an abort while the spacecraft was on the launch pad or during the first seconds of flight. The recovery area was defined by the range of launch azimuths, which were dependent on the launch window. For a given wind profile and launch azimuth, the loci of possible landing points lay in a narrow corridor within this area. The location of the corridor was identified and transmitted to the recovery forces before launch.

The next area of coverage required for the launch phase was the so-called launch abort area in which the command module would land if an abort were initiated between about 90 seconds after lift-off and the time of insertion into an earth-parking orbit. Figure 7-4 illustrates a typical launch abort area based on a range of launch azimuths from 72° to 106°. As in the launch site area, the loci of possible landing points lay within a relatively narrow corridor once the actual launch azimuth was established.

The probability of a landing in sector B of the launch abort area (from 100 to 3400 miles down range) was relatively low because the capability to insert the spacecraft into earth orbit using the S-IVB stage and the service propulsion system was present after reaching a downrange distance of less than 1000 miles. Therefore, a lower level of recovery support for sector B was justified. As the program progressed, the support for both sectors was reduced and dependence was placed on ships of opportunity for retrieval of the command module. The maximum time specified for providing pararescue assistance to the flight crew, however, was maintained at 4 hours for all flights. HC-130 search-and-rescue aircraft with pararescue personnel aboard were airborne in the launch abort area before launch. These aircraft were positioned so that the 4-hour access time requirement could be met. When a launch delay occurred, the aircraft moved south and maintained advantageous positions with respect to the updated launch azimuth.

The most significant change in the launch abort recovery force deployment was that, beginning with Apollo 16, the requirement for recovery ship support of sector A was deleted. The launch site HH-53C helicopter was used instead because, with inflight refueling, the aircraft had become capable of retrieving the flight crew to a distance of 1000 miles. Also, the insertion tracking ship U.S.N.S. *Vanguard* could have provided assistance if a contingency landing had occurred in its vicinity.

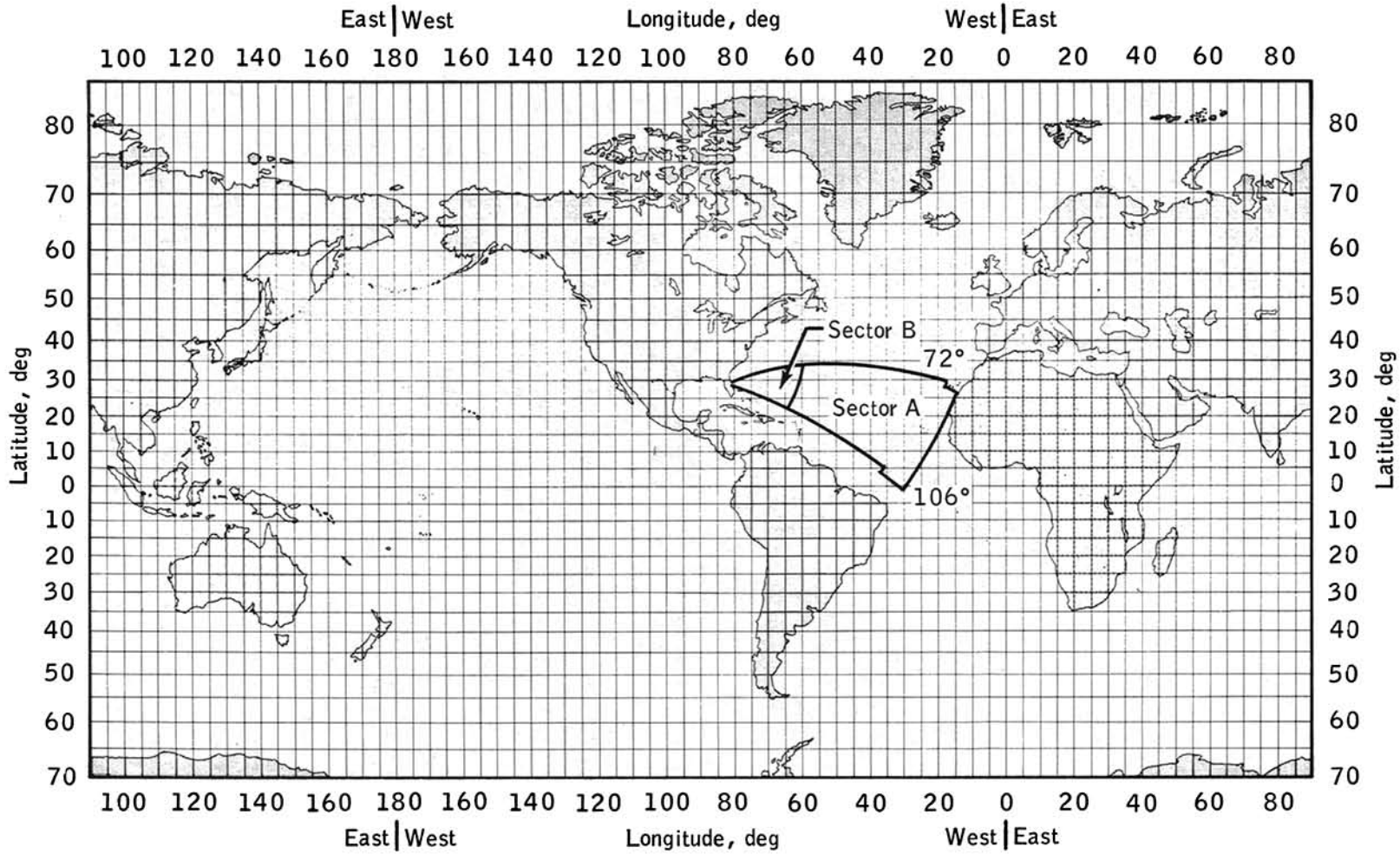


Figure 7-4.- Typical launch abort area.

b. Earth-parking-orbit phase. The second phase of lunar mission recovery support was implemented at insertion of the spacecraft/S-IVB stage into earth orbit. Two recovery zones were defined. One was located in the West Atlantic, and a larger zone was located in the mid-Pacific (fig. 7-5). Secondary landing areas, supported by ships and/or aircraft, were designated within or near these zones so that assistance could be provided to the crew within 6 hours if a landing became necessary before translunar injection.

A lower level of recovery support was provided for all the area (exclusive of the secondary landing areas) which was within the 40° latitude lines. This area was called the orbital contingency landing area. The recovery support consisted of specially equipped HC-130 aircraft (where possible, the same aircraft that supported the launch abort and secondary landing areas). These aircraft were deployed to staging bases from which they could have provided assistance to the crew within specified times, generally not to exceed 48 hours. Although some portions of the area were beyond the 48-hour capability of the aircraft, a degree of risk was accepted based on the low probability of a contingency landing in these locations weighed against the cost of maintaining higher support levels.

To provide for the possibility of an earth orbital alternate mission if the translunar injection maneuver could not have been performed, additional target points were selected to provide a landing opportunity on each revolution. Whenever possible, these points were chosen within the West Atlantic and mid-Pacific zones. On determination that an earth orbital alternate mission would be flown, the sizes of the zones would have been reduced and the recovery forces redeployed to provide optimum support. If a secondary recovery ship (destroyer or similar sized ship) had initially been supporting the mid-Pacific zone, the primary recovery ship (aircraft carrier) would have relieved the secondary ship.

c. Translunar injection to end of mission. After performance of a successful translunar injection maneuver, designated ships were deployed to support so-called deep-space secondary landing areas located on the north-south trending lines in the Pacific and Atlantic Oceans shown in figure 7-2. These lines were known as the mid-Pacific line and the Atlantic Ocean line. In addition, HC-130 aircraft were available to support these landing areas as well as the entire area within the 40° latitude lines where a landing could occur, shown by the shaded area in figure 7-2. As a mission progressed, the ships maintained positions that would allow them to retrieve the crew within specified times (ranging from 16 to 32 hours) in case of a deep-space abort. The spacecraft, preferably, was to be targeted for a landing area on the mid-Pacific line since the primary recovery ship was there. If this had not been possible, a landing would have been made where a secondary recovery ship was available. A ship was positioned on the Atlantic Ocean line for five of the nine lunar missions. The requirement was not levied for the later missions. If an Atlantic Ocean landing had been necessary for these missions, recovery of the command module would have been effected by a ship of opportunity.

When the Apollo 13 mission was aborted, the spacecraft was initially placed on a free-return circumlunar trajectory that would have resulted in a landing in the Indian Ocean. To shorten the return time and to provide primary recovery ship support, a transearth injection maneuver was performed approximately 2 hours after passing lunar pericynthion. This maneuver and two mid-course corrections placed the spacecraft on a trajectory that permitted a landing on the mid-Pacific line. Because of the emergency, additional support was provided by the Department of Defense and offers of assistance were made by many nations. Including voluntary support, 21 ships and 17 aircraft were available for an Indian Ocean landing, and 51 ships and 21 aircraft were available for an Atlantic Ocean landing. In the Pacific Ocean, 13 ships and 17 aircraft were known to be available in addition to the designated forces.

d. Normal end-of-mission landing. Before the command module entered the earth atmosphere, the primary recovery ship was positioned a few miles from the end-of-mission target point and aircraft were typically positioned as shown in figure 7-6. Shipborne aircraft were positioned in the immediate area, and land-based HC-130 aircraft were positioned up range and down range for tracking and for providing pararescue capability in case of an undershoot or overshoot.

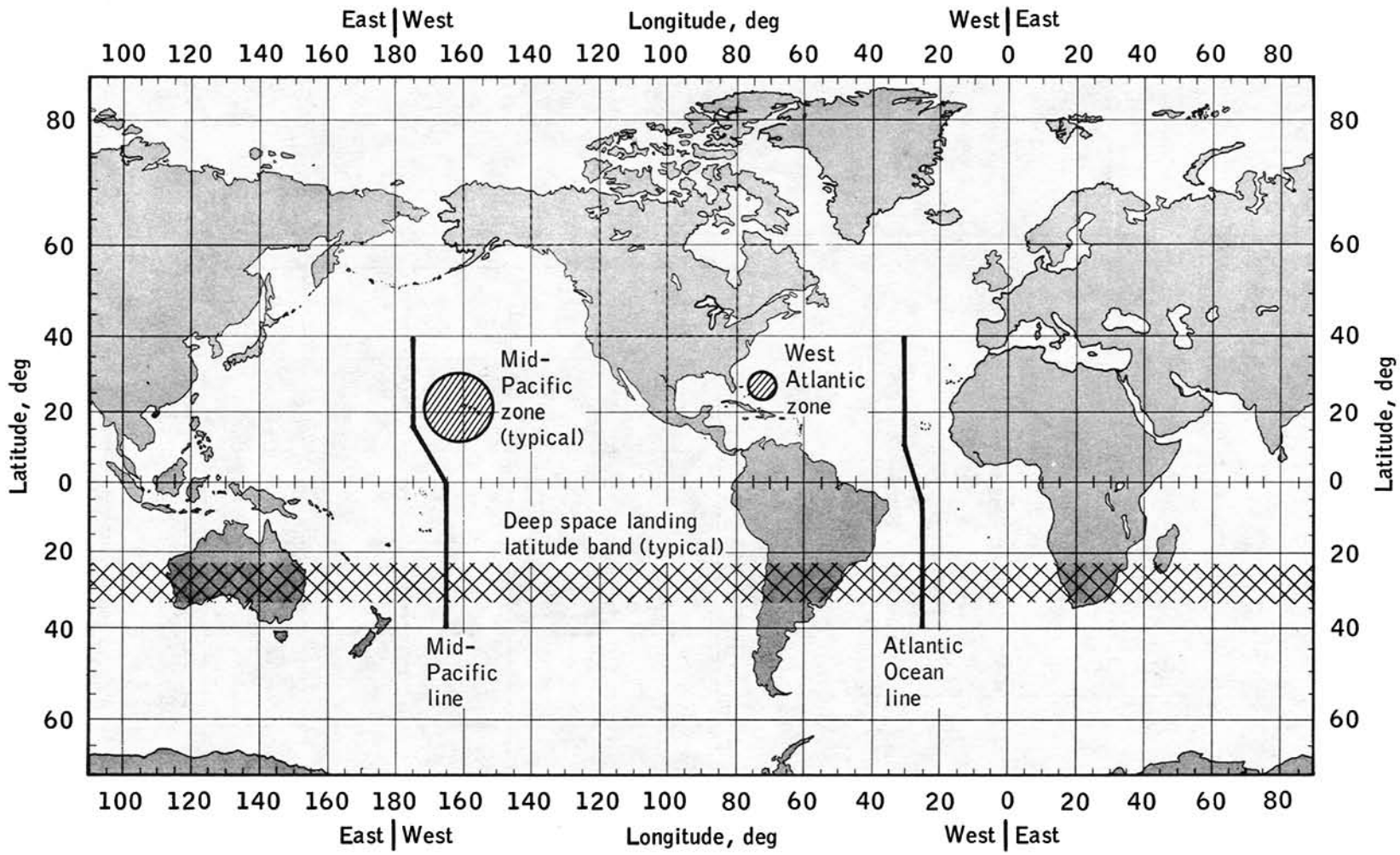


Figure 7-5.- Earth orbital recovery zones, deep space recovery lines and landing latitude band.

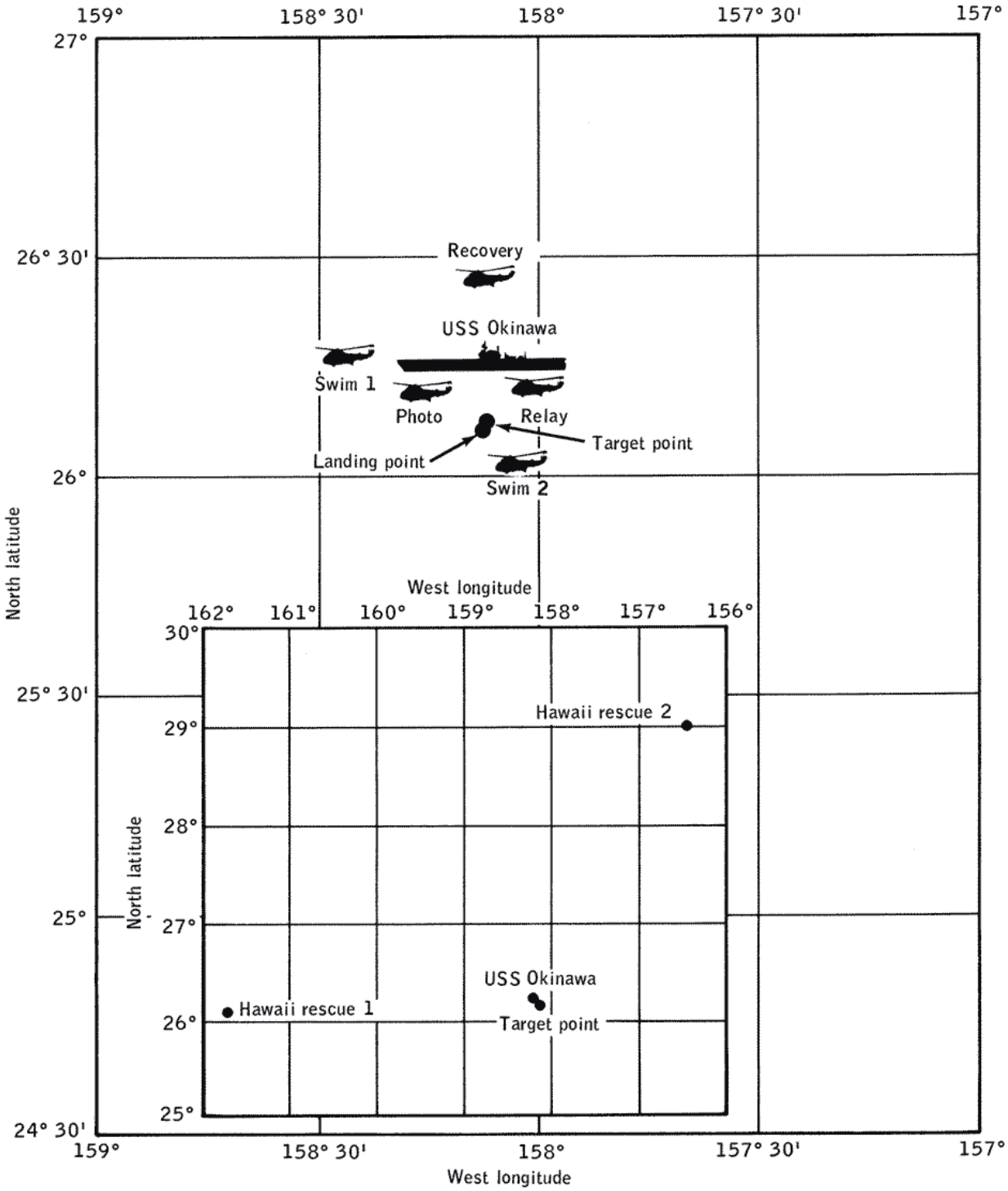


Figure 7-6.- Typical end-of-mission recovery support.

Elaborate precautions were taken for the first three lunar landing missions to prevent contamination from possible alien micro-organisms during retrieval and transportation of the crews and their spacecraft to the Lunar Receiving Laboratory at the Manned Spacecraft Center. At that time, the presence of lunar micro-organisms was thought possible, and the precautions taken were based on recommendations from an interagency committee on back contamination and the desire of NASA to be cautious. Because no micro-organism could be identified after three lunar sites had been explored, the precautions were eliminated for the final three missions.

Table 7-I gives the overall ship and aircraft support provided for the Apollo program. Additional landing and recovery data are given in appendix A.

### 7.4.3 Equipment and Procedures

Primary recovery ships and attendant swimmer/helicopter teams were used for recovery of all crews. In general, the normal crew retrieval procedures consisted of deploying swimmers, a flotation collar, and a sea anchor from helicopters; attaching the sea anchor and collar to the command module; deploying rafts from a helicopter; attaching a raft to the collar; opening the command module hatch; and assisting each crewmember, in turn, into a raft from which they were helped into a rescue net suspended from the pickup helicopter (fig. 7-7). These procedures were practiced by the Apollo crews before their missions and by the helicopter and swimmer teams both before the missions and while en route to recovery stations.

For the first three lunar landing missions, special equipment and procedures were used to isolate the Apollo crewmen and the recovery personnel required to enter the command module, to isolate the command module interior and its contents, and to decontaminate any areas that might have been exposed to contaminants. During the swimmer/helicopter operations, the crewmen donned biological isolation garments before egress and wore the garments until they were inside a mobile quarantine facility on the hangar deck of the recovery ship. The command module, when hoisted aboard, was positioned near the quarantine facility and connected to the facility by a tunnel which provided access to the cabin for removal of lunar samples and other items (fig. 7-8).

Airborne electronic location equipment consisted of NASA-furnished search-and-rescue-and-homing systems and AN/ARD-17 direction finder sets. The search-and-rescue-and-homing equipment was installed on primary recovery ship helicopters and on the helicopters used in the launch site recovery area and was compatible with the command module recovery beacon and survival beacon frequency of 243 megahertz. The AN/ARD-17 sets, developed especially for the Apollo program, were installed in HC-130 aircraft. Two aircraft were generally located approximately 200 miles up range and down range of the predicted landing point and offset from the command module groundtrack (fig. 7-6). The S-band tracking was used from the end of the communications blackout until approximately 1 minute before the predicted main parachute deployment. (The VHF recovery beacon was activated at that time.) The S-band tracking mode was used to help determine whether the landing would occur up range or down range of the particular aircraft. The set was then switched to the VHF mode to attempt recognition of the recovery beacon signal as soon as the beacon was turned on. Immediate recognition of the recovery beacon signal was desirable because the line-of-sight range was approximately 300 miles when the command module was at an altitude of 10 000 feet compared with a 195-mile range when the command module was on the water.

Small waterproof radios were issued to Air Force pararescue personnel and Navy swimmers to permit communications with aircraft, the recovery ships, and the Apollo crews during recovery operations. The radios had three operating modes: voice or beacon when operating on a frequency of 282.8 megahertz and voice only when operating on a frequency of 296.8 megahertz.

The special equipment carried aboard the HC-130 aircraft also included an aircraft-deployed drift reduction system. The system consisted of two parachute-delivered drag packages connected by a buoyant line. The drag packages were dropped in the path of the command module so that the line could be snagged as the command module drifted across the line. A grappling hook could have been deployed through the command module side hatch pressure equalization valve port (after removal of the valve) by a crewman to snag the line or, if the command module went underneath the line, the inflated uprighting bags would have snagged it. Tests of the system showed that the parachutes, acting as sea anchors, effectively slowed the drift rate of the command module, increasing the probability of reaching the command module quickly.

TABLE 7-I.- APOLLO RECOVERY SUPPORT

| Mission | Overall recovery forces | | | |
|---|---|---|---|---|
| | Navy ships | | Aircraft | |
| | Atlantic Ocean | Pacific Ocean | Navy | Air Force |
| AS-201 | 8 | - | 16 | 16 |
| AS-202 | 4 | 3 | 43 | 4 |
| Apollo 4 | 5 | 2 | 37 | 5 |
| Apollo 5 | 1 | - | - | - |
| Apollo 6 | 5 | 2 | 25 | 10 |
| Apollo 7 | 4 | 5 | 8 | 23 |
| Apollo 8 | 6 | 6 | 21 | 22 |
| Apollo 9 | 3 | 3 | 7 | 22 |
| Apollo 10 | 4 | 4 | 10 | 20 |
| Apollo 11 | 3 | 2 | 13 | 18 |
| Apollo 12 | 3 | 2 | 9 | 17 |
| Apollo 13 | 2 | 2 | 8 | 14 |
| Apollo 14 | 3 | 2 | 5 | 14 |
| Apollo 15 | 2 | 2 | 5 | 12 |
| Apollo 16 | [a]1 | 3 | 6 | 11 |
| Apollo 17 | [a]1 | 2 | 5 | 10 |

[a]Small ships were used for sonic boom measurements in addition to the ship indicated.

Figure 7-7.- Helicopter pickup of Apollo crewman.

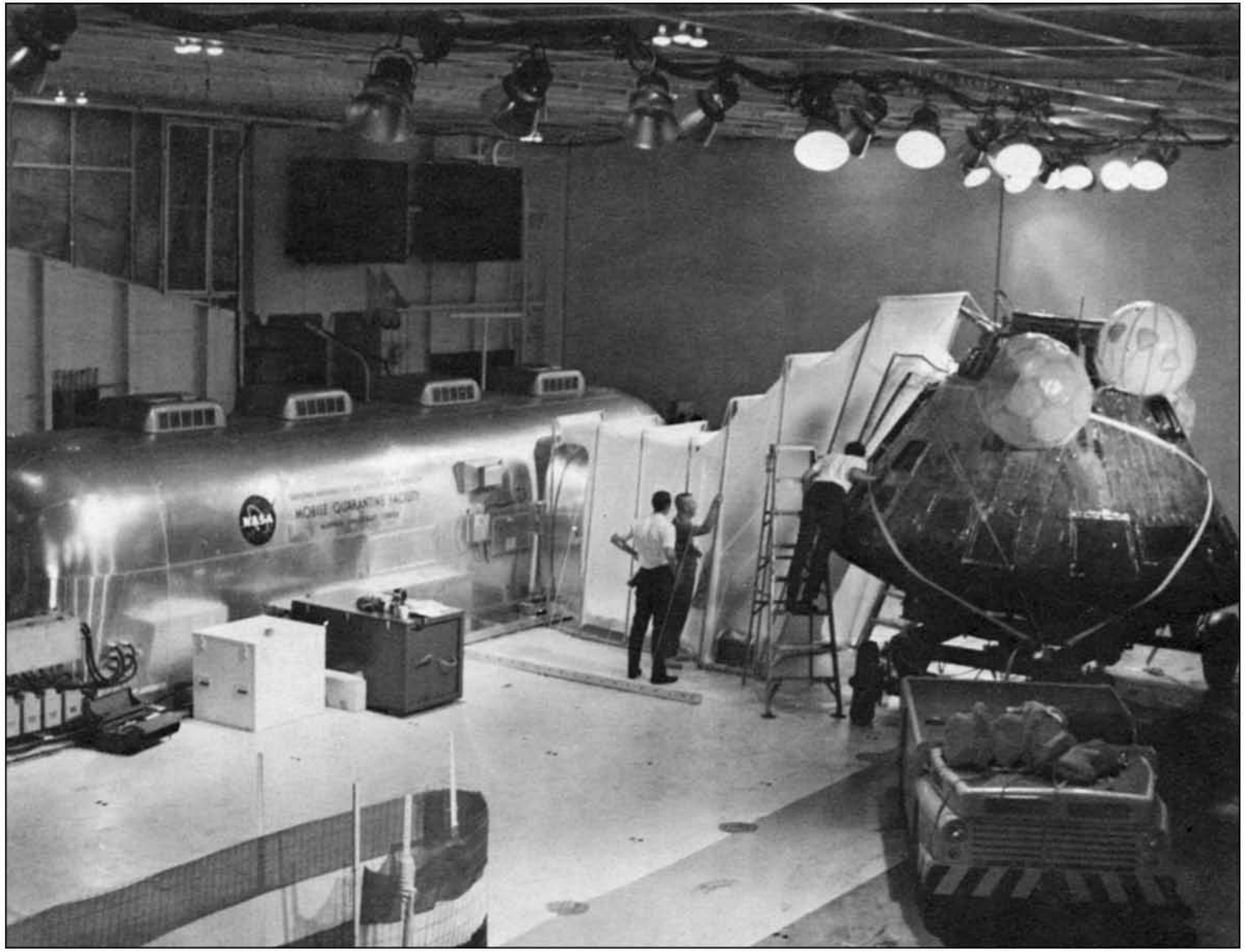

Figure 7-8.- Installation of the tunnel between command module and quarantine facility.

Much special equipment was carried aboard secondary recovery ships to facilitate command module retrieval and handling. The major item on destroyers was a NASA-developed davit crane that incorporated a holdoff ring to stabilize the command module during pickup. A boilerplate command module was furnished to all secondary recovery ships so that retrieval training could be conducted while the ships were en route to assigned areas. In addition, a kit containing auxiliary retrieval equipment was provided. Included in the kit were such items as line threaders, threaders, poles, hooks, fending pads, and a cradle to support the boilerplate command module during training or the actual command module, if recovered. No special facilities were furnished for the biological isolation of lunar landing mission crews; however, if a secondary recovery ship had performed a recovery, the Apollo crewmen would have been quarantined in whatever facilities were available.

The vehicles, equipment, and procedures used in the launch site recovery area were similar to those used for Gemini flights; however, several procedural changes were made and some new equipment was introduced. Starting with Apollo 7, the HH-53C heavy-lift helicopter was added to the complement of launch site recovery vehicles for uprighting the command module and for delivering pararescue personnel, firefighters, and equipment. For surf operations, the same type of amphibious vehicle used during Gemini was initially adapted for command module retrieval, but the use of this vehicle was discontinued after Apollo 11 when surf retrieval procedures using the HH-53C helicopter were developed. Examples of equipment developed or adapted for crew rescue from the command module include a "jammed hatch kit," containing special tools for gaining access to the command module crew compartment, and a helicopter-deployable fire suppression kit for extinguishing hypergolic fires. In addition, improved protective clothing was developed for firefighting personnel.

### 7.4.4 Command Module Postretrieval and Deactivation Procedures

Shipboard recovery activity after command module retrieval included photographing the command module; documenting observations and inspections; verifying electrical shutdown of the vehicle; and removing and expediting the return of lunar samples, data, and specified equipment.

On arrival at a designated deactivation site, the command module was inspected and its condition evaluated by a landing safing team. The pyrotechnic devices were safed, and the reaction control system propellants were removed according to prescribed procedures. Deactivation operations were carried out without incident except for the one performed on the Apollo 16 command module (sec. 4.4.7.2). While the oxidizer was being removed, the scrubber tank of the decontamination unit exploded, destroying the ground support equipment unit and damaging the building where the operation was being performed. The personnel in the area received only minor injuries, and the command module was not damaged. Tests showed that the explosion was caused by excessive gases produced because the quantity of neutralizer was insufficient for the quantity of oxidizer being removed. Corrective actions were implemented for the Apollo 17 command module and all subsequent vehicles, the primary action being to eliminate the requirement to neutralize residual propellants at the deactivation site.

### 7.4.5 Concluding Remarks

The effectiveness of the overall recovery support was maintained even with a trend toward the use of fewer ships and aircraft as the program progressed. The force reductions were based on several factors: a continually increasing confidence in the reliability of the spacecraft and launch vehicles, the availability of a tracking ship (the U.S.N.S. *Vanguard*) that could serve as a recovery ship during the launch abort phase, the deletion of the requirement for quarantine, and the availability of long-range heavy-lift helicopters late in the program.

## 7.5 EFFECTS OF WEATHER ON MISSION OPERATIONS

The weather had no significant effect on the major operations of the Apollo program. Some weather considerations are noteworthy, however, and are discussed briefly. The discussion is divided into three parts: operations during vehicle testing at the launch complex, the launch phase, and recovery operations.

### 7.5.1 Prelaunch Operations

Spanning a period of 7 years, approximately 106 instances in which weather had an impact on prelaunch operations were recorded. As the program progressed, work curtailments and interruptions decreased because of improved weather proofing, improved adverse weather warning systems, facility modifications, and less stringent ground rules governing work activity during adverse weather. Weather-related work interruptions during prelaunch operations caused no launch delays.

Several ground support units were damaged by the electromagnetic effects of lightning strikes during the prelaunch checkout of Apollo 15. Five incidents of lightning strikes on Launch Complex 39 were recorded during the prelaunch period. The first strike, one of 98 000 amperes, caused damage to eight units of ground support equipment. The second strike, one of 31 200 amperes, occurred the following day but damaged only one ground support unit. Ten days later, a strike of 22 000 amperes damaged two units of ground support equipment. The damage from the three strikes was attributed to improper grounding of cable shields and signal returns associated with the affected equipment. Modifications to the support equipment and facility grounding systems corrected these inadequacies and prevented equipment damage during two subsequent strikes of 23 000 and 6500 amperes.

### 7.5.2 Launch Phase

Only two Apollo missions experienced launch delays because of weather conditions. Mission AS-201 was delayed three times because of local cloudiness that was unsatisfactory for the required camera coverage. The Apollo 14 flight was delayed 40 minutes because of weather conditions that exceeded mission rule guidelines established after lightning struck the Apollo 12 space vehicle during launch (ref. 7-13).

Apollo 12 was the only mission affected by weather conditions during a launch. Before launch, launch officials were concerned about the approach of a cold front with its associated cloudiness and precipitation; however, these weather conditions did not exceed the then existing mission rule guidelines. At 36.5 seconds and again at 52 seconds after lift-off lightning caused major electrical disturbances. Many temporary effects were noted in both the launch vehicle and the spacecraft, and some permanent effects involving the loss of nine nonessential instrumentation sensors were noted in the spacecraft. After a thorough systems checkout in earth orbit, however, the spacecraft was found to be operating satisfactorily and the mission was continued.

Investigation of the Apollo 12 lightning incident showed that lightning can be triggered by a space vehicle and its exhaust plume in an electrical field that would not otherwise have produced natural lightning. Weather conditions such as the clouds associated with the cold front through which the Apollo 12 vehicle was launched can be expected to contain electrical fields and sufficient charge to trigger lightning. The possibility that the Apollo vehicle might trigger lightning had not been considered previously. Consequently, the launch rule guidelines were revised to restrict launch operations in weather conditions with potentially hazardous electric fields and charge centers. Additional instrumentation on the ground and in aircraft was used to monitor the launch mission rule parameters after the Apollo 12 incident.

### 7.5.3 Recovery Operations

The weather interrupted training operations of recovery teams in many instances but did not seriously affect the Apollo recovery operations. The weather affected recovery operations on only three occasions. Although the Apollo 7 command module landed in the Atlantic Ocean, the alternate landing area in the Western Pacific was moved to the Central Pacific because of high winds and seas caused by typhoon Gloria. The Apollo 9 deorbit maneuver was originally planned to occur on the 151st earth revolution with the landing to be made in the Western Pacific recovery zone. Because marginal wind and sea conditions were predicted for this area, the mission was extended an additional revolution and the landing area was moved 500 miles south. For Apollo 11, the nominal end-of-mission landing area in the Central Pacific was located near the northern boundary of the intertropical convergence zone — a region of significant shower and thunderstorm activity. Weather satellite information and aircraft reconnaissance reports indicated that a northward extension of the zone would affect the planned landing area. Consequently, the area was moved 200 miles northeastward where acceptable weather was assured.

## 7.6 APOLLO FLIGHT DATA

The three basic purposes for which flight data were used during the Apollo program were (1) operational monitoring and control of the spacecraft during various mission phases, (2) evaluation of spacecraft performance to resolve anomalous operation and to determine design changes required for future flights, and (3) collection of data from various mission experiments. Data from the Apollo spacecraft, lunar subsatellites, and lunar experiments were transmitted to the Manned Space Flight Network. Remote site telemetry data were retransmitted to Houston and also recorded on magnetic tape for possible later use. Figure 7-9 shows the telemetry portion of the command, communications, and telemetry system and illustrates the final system configuration after several changes were made during the program to increase the capacities of the data systems.

### 7.6.1 Operational Data

The data for operational control and preliminary anomaly identification and resolution were transmitted from the Manned Space Flight Network sites through high-speed data channels. Because of limited bandwidth, the available high-speed data channels would not accommodate all spacecraft telemetry data. Two methods were used to decrease the amount of retransmitted data. First, the data were thinned by reducing the sample rate. In most cases, selected measurements were transmitted to the Manned Spacecraft Center at one-tenth the normal sample rate. The second method was to transmit only those data that were of most interest during a particular mission phase. Thus, planned sets of measurement/sample-rate formats were used. Each of these formats was used for a particular mission activity or function. For example, a format containing mostly command and service module data was transmitted during the translunar coast mission phase, and a format containing both lunar module and command and service module data was transmitted during lunar orbit operations.

Data channels were also available to transmit selected full-rate data. Biomedical and limited amounts of critical-systems data were transmitted in this manner.

Once these data were received in Houston, several display methods were available to the analysts. Real-time data were available on television displays, strip charts, or high-speed printers.

### 7.6.2 Engineering Analysis Data

The prime sources for engineering analysis data were the magnetic tapes recorded at the remote sites. Data from these tapes were processedselectively. First, data retransmitted to Houston for operational control purposes were evaluated and specific times, where additional data were required, were identified; data from these time periods were then retrieved from the remote site magnetic tapes. Details of the engineering analysis data techniques are available in reference 7-14.

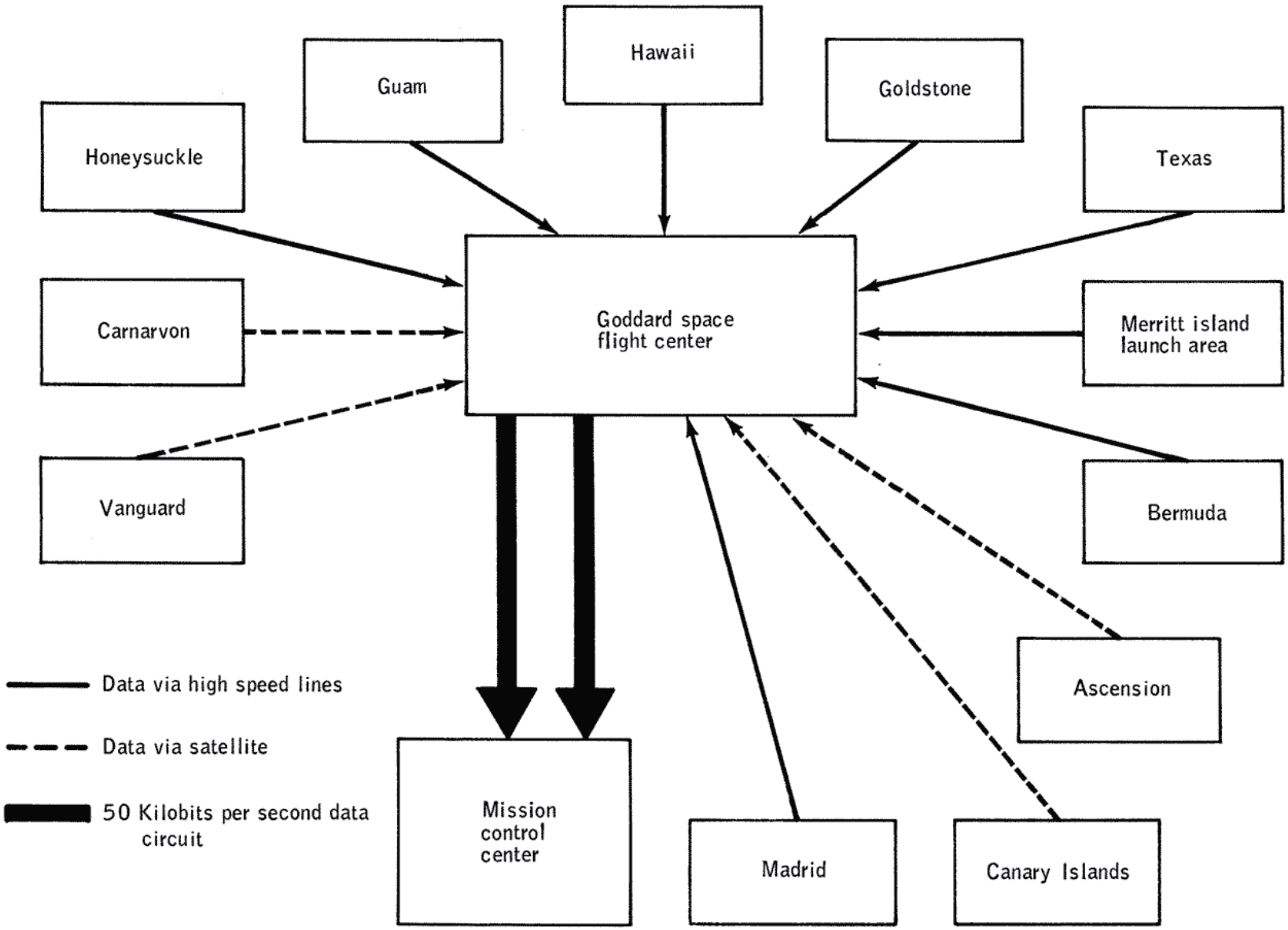


Figure 7-9.- Spacecraft tracking and data network data flow.

### 7.6.3 Experiment Data

Experiment data were reduced, primarily, from remote site magnetic tapes. Some of the data returned to Houston for operational control was also used for preliminary experiment analysis. This reduction was accomplished by using computer programs developed by principal investigators and processed on Manned Spacecraft Center computers.

The prime data for experiment evaluation were prepared from the remote site magnetic tapes and furnished to the principal investigators as merged computer-compatible tapes from which each principal investigator could perform additonal analyses on his own computers.

## 7.7 MISSION EVALUATION

An essential activity during the Apollo manned missions was the mission evaluation provided by an organized team of engineering specialists who resolved technical problems associated with the spacecraft systems. This team of engineers provided direct support to the Kennedy Space Center during prelaunch testing and to the flight control organization in the Mission Control Center during mission operations. Details concerning activities related to mission evaluation are given in references 7-15 through 7-18.

### 7.7.1 Prelaunch Support

The Apollo 13 Accident Review Board recommended that cognizant design personnel should be more closely associated with the prelaunch checkout activity. Based on the successful real-time mission evaluation team support, this concept was implemented during the prelaunch checkout. Starting with the Apollo 14 mission, prelaunch testing was monitored both at the Manned Spacecraft Center and at the contractor's mission support rooms. When the launch center requested support, the mission evaluation team was called on to evaluate the problem and provide a technical solution. As in the real-time mission support, government technical specialists and spacecraft contractor personnel were combined in a joint effort, under a NASA team leader, to provide the required answers.

The effort was typified by the retest requirements which were necessitated by the prelaunch lightning discharges that occurred first on the Apollo 15 vehicle and then on several subsequent spacecraft. The initial concept of retest, if a lightning discharge occurred in the vicinity of the spacecraft, was to retest all spacecraft systems. This concept proved to be impractical since all systems could not be checked because of safety considerations or time constraints. The retest philosophy that was developed was first to assess those vehicle measurements that would most likely be affected and then to verify visually whether any further retests were required, depending on the damage assessment. This technique permitted a rapid assessment of the initial damage and allowed the retest requirements to be limited to a reasonable minimal level.

### 7.7.2 Real-Time Evaluation

The analysis of spacecraft operations and performance was exercised at two levels of effort for separate reasons. During the conduct of a mission, the evaluation of spacecraft and/or crew status was required in real time to exercise proper mission control. When an abnormal condition occurred, alternate procedures, techniques, or activity plans were developed to ensure crew safety and to accomplish the mission objectives. After mission completion, a more detailed analysis was performed on equipment anomalies or failures. The postmission evaluation was intended to determine the solutions to experienced problems and the corrective actions to prevent recurrence on subsequent flights. Each type of evaluation was extremely important in the successful accomplishment of the Apollo program.

The real-time evaluation was conducted both by the mission control team in the Mission Control Center and by the mission evaluation team. The many systems specialists involved with mission preparation of the flight crew and/or equipment provided extensive support. The real-time evaluation of systems served two purposes. The first was to improve or optimize systems performance under normal operating conditions. Examples of work accomplished for this purpose were bias

compensation for gyro/accelerometer values and attitude control configuration for the reaction control system propellant balance. The second purpose was, after a detection of a system anomaly or failure, to determine the remaining systems capability and required alternate operations. Perhaps the best example of effort of this type was the operational control exercised during the Apollo 13 mission after the oxygen tank failure described in section 4.4.5.

The real-time evaluation of a problem involved three actions: understanding the anomaly or failure, assessing its impact, and selecting an adequate solution to the problem. The symptoms of a problem were identified by means of spacecraft telemetry and by crew verbal descriptions. Often, special system configurations or operational modes were used to gain greater insight into the existing conditions and the extent of the problem. The data obtained were then used, in conjunction with reference documentation such as systems drawings and operations handbooks to isolate the source of the problem. This effort was conducted to identify the fault, but not necessarily to discover why the fault occurred.

Once a problem was detected and/or identified, its impact on the remaining mission activities had to be assessed. As with the problem itself, the resulting consequences were sometimes obvious but at other times were complicated and involved. Where possible, a component anomaly or failure would be duplicated in a simulator and the affected operations exercised. In this manner, the full implications of a problem could be determined under realistic conditions.

After the impact of a problem was determined, the next step was to develop alternate techniques or procedures to protect against or completely bypass the particular problem. This was the actual intent of real-time evaluation. The technical expertise of the mission control team and the mission evaluation team was used to find the best solution within the time frame allowed. Sometimes the solution was simple. For example, a problem wherein the Apollo 16 lunar module steerable antenna would not release was overcome by adjusting the spacecraft attitude to point the immovable antenna directly at the earth. Attitude was maintained until a 210-foot-diameter ground antenna acquired contact with the spacecraft on the landing revolution, as was originally planned. With the large ground antenna, high-bit-rate telemetry data could be received from other transmitting antennas on the lunar module. Other problems were more difficult to deal with, requiring new or additional crew checklist procedures. Perhaps the most difficult challenge of the Apollo program was encountered on the Apollo 13 mission as a result of the previously mentioned oxygen tank failure. New techniques had to be developed to operate the lunar module systems in a manner for which the systems had not been designed. The lunar module electrical and environmental resources had to be carefully managed for life support over a longer-than-normal timespan. Even as the mission neared completion, new procedures were necessary to separate the lunar module and then the crippled service module safely from the command module before entry. The techniques described, as well as those used to overcome problems on other missions, were thoroughly examined before they were actually applied. Where possible, all resolutions to problems were demonstrated on ground training or simulation facilities before actual use during the mission. The ground trainers and simulators proved to be valuable tools in the verification of new techniques. The verification process was used to ensure reasonable execution feasibility, time-line compatibility, crew safety, and a successful solution to the problem.

The real-time evaluation effort served to resolve the problems occurring during the mission that threatened crew safety or the accomplishment of mission objectives. The complexity and long duration of the Apollo missions provided ample opportunity to challenge the resources of the problem resolution teams. The successful achievements of the program were enhanced by the real-time evaluation capability.

### 7.7.3 Postflight Evaluation

Anomalies that involved flight safety or that would compromise the accomplishment of follow-on mission objectives required corrective action before the next flight. The frequency of the Apollo flights demanded that the anomalies be quickly identified and resolved so that prompt corrective action could be taken. Consequently, analysis of the pertinent data had to be compressed into a relatively short time frame. Also, within this time frame, the anomalies had to be analyzed to the extent that the mechanism for the cause was clearly understood.

The first problem was to identify the anomalies. Many anomalies were simple to recognize because a component failed to operate. The more difficult cases occured, however, when accrued data from the system operations were not sufficient to understand all the normal operating characteristics. A typical example of this condition occurred on the Apollo 7 mission when the battery recharging characteristics were below predicted levels throughout the flight. Preflight tests had been conducted at the component level; however, an integrated test of the entire system, as installed in the spacecraft, had not been conducted. Postflight testing of the flight hardware showed the same characteristics as those experienced in flight. A detailed analysis indicated that high line resistance between components of the system greatly limited the amount of electrical energy returned to the battery. The corrective action for this anomaly was to require integrated system testing to establish overall system characteristics of each spacecraft installation and thus to ensure adequate battery recharging capability. In this case, if the total system operating characteristics had been established in ground tests, no flight problem would have occurred.

At times, sufficient flight data were not available for an accurate analysis of the problem. This situation existed because of insufficient flight instrumentation or absence of recorded data. For these cases, the mission evaluation personnel relied on the information from previous missions, the experience gained from ground tests and checkouts, and the failure history of the system components.

After an anomaly was identified, the next steps were to determine the cause and implement the corrective action. Two basic techniques were used to determine the answer. The first was experimental, and testing of the actual or identical flight hardware was conducted under simulated static or dynamic conditions of temperature, pressure, load, or electrical environment. The second technique was analytical, and classical methods were generally used. One or both techniques were used, depending on the nature of the problem. In all cases, the most expedient approach in terms of time and cost was taken.

The depth and the extent of the analysis varied considerably, depending on the significance of the problem. For example, the failure of the Apollo 6 spacecraft/lunar module adapter (discussed in sec. 4.4.2) required the investigation of several possible failure modes and the implementation of a number of corrective measures. In other cases, because of the nature of the problem, no corrective action was taken. For example, an electroluminescent segment of the Apollo 11 entry monitor system velocity counter would not illuminate. A generic or design problem was highly unlikely because of the number of satisfactory activations before the recorded failure. A circuit analysis produced numerous mechanisms which could cause the failure; however, no previous failure had occurred in any of these areas. The spacecraft was designed with sufficient redundancy to accommodate this type of problem. Consequently, no corrective action was taken in such cases.

The causes of anomalies involved quality, design, and procedure considerations. The substandard quality items included broken wires, improper solder joints, incorrect tolerances and improper manufacturing procedures. The structural failure of the Apollo 6 adapter is an example of a quality problem. System anomalies caused by design deficiencies were generally traced to inadequate design criteria. Consequently, the deficiency passed development and qualification testing without being detected but appeared during flight under the actual operational environment. For example, a design deficiency became apparent during the Apollo 7 flight when the command module windows fogged between the inner surfaces of three windowpanes. A postflight examination showed that the fogging was produced by outgassing of room-temperature-cured material that had been used to seal the window. The design criteria had not required the sealing material to be heat cured or vacuum cured, a procedure that would have prevented outgassing when the material was exposed to the operating temperature and pressure environment of the spacecraft during flight. Correction of procedural problems in operating various systems and equipment was usually simple. An example of a procedural problem occurred when a camera struck an Apollo 12 crewman at landing. Had the flight plan or the crew checklist required stowage of this camera before landing, the incident would not have occurred.

An additional search for causes of anomalies was conducted when the command module was returned to the contractor's facility for a general inspection. Those systems or components that had been identified as having a problem or failure were either removed from the vehicle and tested or tests were performed with the affected equipment in position in the command module. In general, the postflight tests were limited to those components that were required to solve the inflight problem.

The concerted effort initiated to solve anomalies during the flight was continued after the mission until each problem was resolved and the required corrective action was established. This activity required close coordination and cooperation between the various government and contractor elements. Prompt and exact analysis for the understanding and timely solution of each problem was emphasized. To accomplish this task, a problem list was maintained during and after each flight. The list contained a discussion of each problem, the action being taken to resolve the problem, the name of the government engineer or contractor responsible for completing the action, and the anticipated closure date.

A discussion of the most significant problems was published after the flight in a 30-day failure and anomaly report. Discussed in this report were analyses of the anomalies and corrective actions that had been or would be taken. The Mission Report, which was published approximately 60 to 90 days after the mission, included a section which discussed the most significant flight anomalies and the corrective action for each anomaly that was closed out at the time of publication. Problems of lesser significance were discussed in the appropriate system or experiments section of the Mission Report. A separate report was published subsequently for each anomaly that had not been resolved in time for publication in the Mission Report.

## 7.8 REFERENCES


7-1. Apollo 16 Mission Report, MSC-07230, 1972.

7-2. Cappellari, J. O., Jr., ed.: Where on the Moon? An Apollo Systems Engineering Problem. Bell System Technical Journal, vol. 51, no. 5, 1972.

7-3. Apollo 17 Descent Targeting Errors, MSC-07002, 1972.

7-4. Apollo 17 Lunar Landmark Locations and Offsets, MSC-07503, 1972.

7-5. Apollo 17 Lunar Trajectory Notes, MSC-07565, 1972.

7-6. Final Flight Crew Charts for Apollo 17 - Launch December 6, 1972, c.s.t. (Dec. 7, 1972, G.m.t.), MSC-07614, 1972.

7-7. Final Prelaunch Navigation Erasable Load for Apollo 17, MSC-07373, 1972.

7-8. Operational Abort Plan - Apollo 17, Launch December 6, 1972, c.s.t. (Dec. 7, 1972, G.m.t.), Volume I - Launch Phase, MSC-07372, 1972.

7-9. Operational Consumables Analysis - Apollo 17, Launch December 6, 1972, c.s.t. (Dec. 7, 1972, G.m.t.), Volume - ECS and EPS Analyses, MSC-07354, 1972.

7-10. Operational Spacecraft Attitude Timeline - Apollo 17, Launch December 6, 1972, c.s.t. (Dec. 7, 1972, G.m.t.), MSC-07568, 1972.

7-11. Operational Trajectory Simulator Data Package for Apollo 17, Launch December 6, 1972, c.s.t. (Dec. 7, 1972, G.m.t.), MSC-07271, 1972.

7-12. Spacecraft Operational Trajectory - Apollo 17, Launch December 6, 1972, c.s.t. (Dec. 7, 1972, G.m.t.), Volume I - Mission Profile, MSC-07197, 1972.

7-13. Analysis of Apollo 12 Lightning Incident, MSC-01540, 1970.

7-14. Foster, G. B., Jr.: Data Management for Postflight Engineering Evaluation. Apollo Experience Report, NASA TN D-7684, May 1974.

*7-15. Fricke, R. W.: Engineering and Analysis Mission Support. Apollo Experience Report.

*7-16. Lobb, J. D.: Flight Anomaly Resolution. Apollo Experience Report.

7-17. Hamilton, D. T. Postflight Testing of Apollo Command Modules. Apollo Experience Report, NASA TN D-7435, September 1973.

*7-18. Dodson, J. W. and Cordiner, D. H.: Mission Evaluation Team Postflight Documentation. Apollo Experience Report.

*These reports are being processed for publication in NASA TN D series.

# 8.0 BIOMEDICAL SUMMARY

The initial medical consideration in the Apollo program was the preservation of the health and safety of the flight crews. However, many of the biomedical activities were based upon other considerations as well. The acquisition of new medical and biological data was made possible by astronauts traveling to another planetary body. Several biomedical experiments were conducted during the missions. Along with the opportunity to acquire new knowledge, however, was the fact that extraterrestrial exploration carried with it the possibility of introducing foreign material into the earth's biosphere that might be harmful to life. This possibility was minimized by the institution of a lunar quarantine program. The fear of biological back contamination proved to be unfounded after careful examination of the crews and lunar samples after each of the first three lunar landings. Therefore, the quarantine requirement was eliminated for the final missions.

Man's ability to tolerate the conditions of space flight for periods up to 2 weeks had been demonstrated in the Gemini program. Since all Apollo flights were planned to be of shorter duration, the effects of weightlessness on the body were not expected to be a serious threat to crew health or a detriment to the accomplishment of the Apollo program. This was indeed the case, although some cardiovascular deconditioning did occur.

A few new medical problems arose in the course of the program. Motion sickness occurred on several flights while the crewmembers were adapting to the zero-gravity environment and large departures from normal circadian periodicity on several flights resulted in crew fatigue. An initial concern was the degree of radiation to which the Apollo crewmen would be exposed. Fortunately, a major flare did not occur during a mission, and the radiation dose was below the threshold of detectable medical effects for all crewmen. Exposure of crewmembers to infectious diseases prior to flight was a problem for the first several flights but was adequately managed by the establishment of a preflight crew health stabilization program.

The crews of the eleven Apollo flights accumulated a total of approximately 7506 man-hours of space flight. Physiological measurements obtained during the flights remained within expected limits during all flights except the Apollo 15 mission. The life support systems of the command modules, lunar modules and extravehicular mobility units provided environments that allowed the program objectives to be achieved without compromising crew health or safety. Details of biomedical results are contained in references 8-1 through 8-11.

## 8.1 PREFLIGHT MEDICAL PROGRAM

### 8.1.1 Flight Crew Health Stabilization

Many conditions that are characteristic of the environment within a manned spacecraft are conducive to the development and transmission of disease. Since infectious disease represents a serious threat to the health of crewmembers and to the successful completion of missions, control and prevention are the most effective ways to deal with this potential problem. Control and prevention are most critical during the last few weeks before a manned mission.

Statistics recorded during the Apollo 7 through Apollo 11 missions show that 57.2 percent of the crewmembers were ill at some time during the preflight period. Based on observations of the first several flights and on the observation of crewmember activities during earlier manned Mercury and Gemini missions, the flight crew health stabilization program was developed and implemented for the Apollo 14 and subsequent missions. The elements of the program were designed to minimize exposure of crewmembers to infectious disease which might result in the subsequent development of symptoms during flight. Each program element is discussed.

8.1.1.1 Clinical medicine.- A clinical medicine program was provided for all crewmembers and their families. The program was continuous as long as the crewmembers were on flight status. Both routine and special physical examinations were provided. Rapid diagnosis of disease and effective treatment were ensured by the virology, bacteriology, immunology, serology, and biochemistry laboratories at the Manned Spacecraft Center.

8.1.1.2 Immunology.- All known immunizations were carefully reviewed by NASA medical personnel and by a special microbiology advisory committee. The immunizations listed in table 8-I were those used for crewmembers and their families. Other available immunizations were not included if:

a. Disease prevention was questionable.

b. A high percentage of traumatic side reactions occurred.

c. The probability of crew exposure to the disease agent was so remote that immunization was unwarranted.

Crewmembers and their families were immunized only after serological tests were performed to determine immunity levels.

8.1.1.3 Exposure prevention.- Prevention of crew exposure to disease was the most important aspect of the program. Regardless of the effectiveness of all the other phases of the program, if the exposure to infectious diseases had not been minimized or eliminated, the program as a whole would not have been successful.

Contaminated inanimate objects probably represent the least hazardous source of infectious diseases. However, certain spacecraft areas such as the communications equipment were controlled by providing individual headsets and microphones for each crewman.

To prevent air-borne transmission of an infectious disease, a closely controlled environment was provided in which crewmembers could reside during the prelaunch period. All areas which the crewmembers inhabited had to be modified by the installation of ultrahigh-efficiency bacterial filters in all air-supply ducts. Thus, an environment was provided in which crewmembers could reside and work without being exposed to microbial agents from other sources. In addition to providing filtered air, the air-handling systems were balanced in a manner that provided higher atmospheric pressure in those areas inhabited by the crew. In this situation, all air leakage was outward rather than inward.

The food consumed by the crew was also a potential source of infectious micro-organisms. No set pattern of food procurement was established to reduce accidental sources of infection. The procurement of food for the living quarters was handled by cooks under the direct supervision of the medical team. Portions of each lot of food purchased were subjected to microbiological evaluation to ensure the safety of the food. Also, all food preparation areas were inspected daily for cleanliness and maintenance of sanitary conditions.

Drinking water was another potential source of infectious disease agents. Sources of drinking water were limited to drinking fountains in the crew quarters and various working areas. To insure that the municipal water-treatment procedures were satisfactory and that safe water was provided, daily water samples were taken and subjected to microbiological evaluation.

Personal contacts represented the greatest source of infectious disease; consequently, minimizing possible exposure to disease from this source was required. First, the areas visited by crewmembers were very restricted, and the number of persons in contact with the crew during premission activities was limited to approximately 150. Second, a medical surveillance program of the primary contacts was instituted. The purpose of the program was to ensure that the probability of disease transmission from the persons who did have contact with the flight crewmembers was low.

The success of the flight crew health stabilization program, implemented in support of the Apollo 14, 15, 16, and 17 missions, was evidenced by the complete absence of illnesses during the preflight, inflight, or postflight periods.

TABLE 8-I.- APOLLO PROGRAM IMMUNIZATION REQUIREMENTS[a]

| Disease | Required immunization for crewmen | Required immunization for members of crewmen's families |
|---|---|---|
| Diptheria | Yes | Yes |
| Pertussis | No | Yes |
| Tetanus | Yes | Yes |
| Typhoid | Yes | No |
| Influenza | Yes | No |
| Mumps | Yes[b] | Yes |
| Poliomyelitis | Yes | Yes |
| Rubella | Yes[b] | Yes |
| Rubeola | Yes[b] | Yes |
| Smallpox | Yes | Yes |
| Yellow Fever | Yes | No |
| Other | (c) | (c) |

[a]Recommended by personnel of the United States Public Health Service and of the American Public Health association.

[b]Immunization if no serologic response was obtained.

[c]Only as indicated for travel to endemic areas.

### 8.1.2 Preflight Physical Examinations

Preflight physical examinations were performed to evaluate each flight crew's physical condition, and to detect and treat any minor physical problems which might compromise flight objectives, or the health and safety of the crew. For Apollo 7, the comprehensive preflight examination was performed 4 days prior to flight, while a preliminary examination was accomplished 14 days prior to launch and a cursory physical examination was performed on the morning of launch. For Apollo missions 8, 9, and 10, four preflight medical evaluations were accomplished, beginning approximately 30 days prior to the scheduled launch date. A 3-day postponement of the Apollo 9 launch resulted when all the crewmen developed common colds. Starting with Apollo 11 and continuing through Apollo 17, daily examinations were conducted for the 5 days immediately preceding launch.

The Command Module Pilot on Apollo 13 was exposed to rubella 8 days before the flight and since laboratory studies failed to demonstrate an immunity to rubella, a decision was made on the day prior to launch to replace the primary Command Module Pilot with the backup Command Module Pilot. A complete physical examination was conducted on the backup Command Module Pilot and he was found fit for flight.

## 8.2 MEDICAL OBSERVATIONS

### 8.2.1 Cabin Environment and Toxicology

Prior to the Apollo program, United States spacecraft were launched with a 100-percent oxygen cabin atmosphere. Following the disastrous Apollo I fire, one of the safety measures introduced was the use of a mixed oxygen and nitrogen cabin atmosphere during the prelaunch and launch periods. The cabin atmosphere was changed to pure oxygen during the early phase of flight. The flight crew denitrogenated prior to launch and remained isolated in the 100-percent oxygen environment of the suit loop until helmets and gloves were doffed.

The Apollo 7 spacecraft was the first to be launched with the mixed-gas cabin atmosphere. The oxygen enrichment curve followed the predicted curve fairly well, but it did not increase as fast as predicted because the cabin leak rate was lower than expected. The maximum cabin oxygen concentration measured during the flight was 97 percent (255 mm Hg) at 236 hours. The altitude equivalency was never above sea level (i.e., oxygen partial pressure was always greater than that at sea level). The cabin oxygen enrichment technique was thus verified by the Apollo 7 flight and used on all successive flights through Apollo 17.

During the Apollo 10 mission, the H-film insulation near the command module hatch vent detached when the docking tunnel was pressurized, and fiberglass insulation underneath this film was blown into the tunnel (ref. 8-4). When the hatch was opened, the fiberglass material permeated the atmosphere of the command module. Also, when the lunar module was pressurized through the command module hatch vent, a large amount of fiberglass was blown into the lunar module. Pieces of the material ranged from 2 inches in diameter to dust-size particles. Wet paper tissues and utility towels were used to collect part of the loose fiberglass. Most of the remaining material was collected in the filters of the environmental control system. However, small particles of fiberglass were still present in the command module cabin atmosphere at recovery. Fiberglass insulation is a skin and mucous membrane irritant and caused the crew to be uncomfortable in flight. The effects on the Apollo 10 crew consisted of scratchy throats, coughing, nasal stuffiness, mild eye irritation, and some skin rash.

After the Apollo 13 abort decision, one major medical concern was the possibility of carbon dioxide buildup in the lunar module atmosphere. Although the allowable limit of carbon dioxide buildup was increased the carbon dioxide level was above the nominal 7.6 mm Hg for only a 4-hour period, and no adverse physiological effects or degradation in crew performance resulted from this elevated concentration. Modified use of the lithium hydroxide cartridges (ref. 8-7) maintained the carbon dioxide partial pressure well below 1 mm Hg for the remainder of the flight.

### 8.2.2 Radiation

Various instruments were used during the Apollo program to monitor and record the degree of crew exposure to radiation. Each crewman carried a personal radiation dosimeter to measure the total absorbed dose received. In addition, the crewmen wore passive dosimeters to measure total radiation received at specific body locations such as the chest, thigh and ankle. Other instruments were installed in the spacecraft which provided data to the ground and permitted monitoring of the radiation environments. A moving emulsion particle detector apparatus was worn for short periods by crewmen of the final two missions to provide data for investigation of visual sensations of light flashes experienced by several crewmen on previous flights.

8.2.2.1 Radiation dose.- No data were reported for the Apollo 7 and Apollo 8 missions. For the remaining missions, the total radiation dose absorbed by any crewman was well below the threshold of detectable medical effects (ref. 8-12).

During the Apollo 12 mission, approximately half of the total dose recorded on the personal radiation dosimeters was received during the phase just prior to entry. This disparity was expected because of a different trajectory which resulted in a longer time going through the Van Allen belts.

The radiation doses received by the Apollo 14 crewmen were the largest observed on any Apollo mission; however, they were well below the threshold of detectable medical effects. The magnitudes of the radiation doses were apparently the result of two factors: (1) the translunar injection trajectory lay closer to the plane of the geomagnetic equator than that of previous flights and, therefore, the spacecraft traveled through the heart of the trapped radiation belts; (2) the space radiation background was greater than that previously experienced.

Three minor solar flares occurred on the Apollo 16 mission. Although the nuclear particle detection system registered a slight increase in proton and alpha particle fluxes, no measureable radiation dose increment was received by the crew from these flares.

8.2.2.2 Visual light flash phenomenon.- Astronauts of Apollo 11 and subsequent lunar missions reported seeing flashes of light while relaxing in the darkened command module or while wearing light-tight eye shades. These events were generally described as colorless star-like flashes, narrow streaks of light, or diffuse light flashes. The flashes were observed during translunar coast, in lunar orbit, on the lunar surface, and during transearth coast. The frequency of occurrence of the light flashes typically averaged about one flash every 1 to 2 minutes.

Evaluation of reports obtained from Apollo crewmen has established the reality of the phenomenon. The hypothesis generally accepted to explain the origin of the light flashes involves exposure to high-energy cosmic ray particles. One or both of the following mechanisms are suggested: (1) relativistic cosmic ray particles passing through the eye emit Cerenkov radiation that produces the light flash sensations; (2) direct interactions of high-energy cosmic ray particles or their secondaries with the retinal cells or associated optic nerve tissues produce the light flash sensations. Results of laboratory experiments during which human subjects were exposed to X-ray and several types of particulate radiation have shown that such radiation does produce similar light flash sensations, and further suggests that most of the light flashes observed by the Apollo astronauts are due to direct interactions of ionizing radiation with cells of the visual nervous system.

### 8.2.3 Adaptation to Weightlessness

With only two exceptions, the crewmen for all eleven flights experienced a fullness-of-the-head feeling upon orbital insertion. The persistence of the feeling was variable, lasting from 4 hours to 3 days.

All three Apollo 8 crewmembers experienced nausea soon after leaving their couches. The Apollo 9 Command Module Pilot and Lunar Module Pilot, the Apollo 10 Lunar Module Pilot, the Apollo 13 Lunar Module Pilot, and the Apollo 15 Lunar Module Pilot also experienced nausea. In addition, the Apollo 9 Command Module Pilot and Lunar Module Pilot reported momentary episodes

of spatial disorientation. All three members of the Apollo 17 crew had "stomach awareness" but did not experience any pronounced nausea. In some of these cases, the nausea appears to have been the result of rapid body movement before adaptation to weightlessness. Symptoms subsided or were absent when the crewmen performed all movements slowly during the period of adaptation. There was no recurrence of the problem after adaptation to the weightless state. Specific head movement exercises also helped to accelerate adaptation to weightlessness.

The crews of the Apollo 7, 12, 14, and 15 missions reported soreness of the back muscles. This condition was relieved by exercise and hyperextension of the back. Although a calibrated inflight exercise program was not planned for any of the flights, an exercise device was provided. The crewmen typically used the exerciser several times a day for periods of 15 to 30 minutes when in the command module.

Another condition resulting from the lack of gravitational pull was puffiness of the face. This symptom was specifically reported by the crews of the Apollo 11, 12, 13 and 15 missions; however, it probably occurred on all the flights.

### 8.2.4 Work/Rest Cycles

Based on previous flight experience, simultaneous crew rest periods were instituted, and were referenced to a crew's normal launch site sleep cycle. The Apollo 9 crew was the first to utilize the simultaneous rest periods. Departures from the crew's normal circadian periodicity caused problems during most of the flights. Since the problems impacting the scheduled sleep programs differed, unique occurrences for each flight are discussed individually.

a. Apollo 7: At least one crewman remained on watch while the others slept during the Apollo 7 mission. Simultaneous sleep was precluded because it was the first manned flight of a new spacecraft. Large departures from the crew's normal circadian periodicity caused problems during the mission. The crew slept poorly for about the first 3 days of the flight and experienced both restful and poor sleep after that period of time. The amount of sleep each crewman obtained was indeterminable.

b. Apollo 8: A very busy flight schedule for Apollo 8 precluded simultaneous sleep and resulted in large departures from normal circadian periodicity and consequent fatigue. Changes to the flight plan were required because of the crew fatigue, particularly during the last few orbits before the transearth injection maneuver.

c. Apollo 9: Apollo 9, the first mission in which all three crewmen slept simultaneously, was a definite improvement over the previous two missions in observed estimated quantity and quality of sleep. The lack of postflight fatigue was correspondingly evident during the physical examination on recovery day. However, the crew workload during the last 5 days of flight was significantly lighter than on previous missions, which undoubtedly contributed to the absence of fatigue.

The flight plan activities for the first half of the mission resulted in excessively long work periods for the crew, and the time allocated for eating and sleeping was inadequate. Crew performance, nonetheless, was outstanding. Departures from the crew's normal circadian periodicity also contributed to some loss of sleep during this time. The crew experienced a shift in their sleep periods which varied from 3 to 6 hours from their prelaunch sleep periods.

d. Apollo 10: The three Apollo 10 crewmen were scheduled to sleep simultaneously and, in general, slept very well during the nine periods.

e. Apollo 11: The crewmen slept well in the command module. The simultaneous sleep periods during the translunar coast were carefully monitored, and the crew arrived on the lunar surface well rested. A 4-hour sleep period prior to the extravehicular activity was provided in the flight plan but the sleep period was not required. The crewmen slept very little in the lunar module following the lunar surface activity; however, they slept well during all three transearth sleep periods.

f. Apollo 12: Sleep periods during the translunar coast phase of the Apollo 12 mission began approximately 7 to 9 hours after the crew's normal bedtime of 11 p.m. The crew had no particular trouble in adapting to the shifted sleep periods; however, the first flight day was extremely long, and the crew was thoroughly fatigued by the time the first sleep period began 17 hours after lift-off.

The crewmen slept well in the command module during the translunar and transearth coast phases. Even though the Lunar Module Pilot took at least two unscheduled naps during transearth coast, sleep periods were considered by the crew to be longer than necessary, since they would invariably awaken about 1 hour ahead of time and would usually remain in their sleep stations until time for radio contact.

The crew slept approximately 3 hours in the lunar module on the lunar surface prior to the second extravehicular activity period. In the next sleep period, following rendezvous and docking, all three crewmen in the command module slept only 3 or 4 hours, which was less than desirable.

g. Apollo 13: The Apollo 13 crew slept well the first 2 days of the mission. All crewmen slept about 5-1/2 hours during the first sleep period. During the second period, the Commander, Command Module Pilot and Lunar Module Pilot slept 5, 6, and 9 hours, respectively. The third sleep period was scheduled to begin 61 hours after lift-off, but failure of the oxygen tank at 56 hours precluded sleep by any of the crew until approximately 80 hours of flight time had elapsed.

After the incident, the command module was used as sleeping quarters until the cabin temperature became too cold (approximately 43° F). The crew then attempted to sleep in the lunar module or the docking tunnel, but the temperature in these areas also dropped too low for prolonged, sound sleep. In addition, coolant pump noise from the lunar module and frequent communications with the ground further hindered sleep. The total sleep obtained by each crewman during the remainder of the mission is estimated to have been 11, 12, and 19 hours for the Commander, Command Module Pilot, and Lunar Module Pilot, respectively.

h. Apollo 14: The shift of the Apollo 14 crew's normal terrestrial sleep cycle during the first 4 days of flight was the largest experienced in the Apollo series. The displacement ranged from 7 hours on the first mission day to 11-1/2 hours on the fourth. The crew experienced some difficulty sleeping in the zero-gravity environment, particularly during the first two sleep periods. They attributed the problem principally to a lack of kinesthetic sensations and to muscle soreness in the legs and lower back. Throughout the mission, sleep was intermittent; deep and continuous sleep never lasted more than 2 to 3 hours.

The lunar module crewmen received little, if any, sleep between their two extravehicular activity periods. The lack of an adequate place to rest the head, discomfort of the pressure suit, and a 7-degree starboard list of the lunar module on the lunar terrain were believed responsible for the lack of sleep. The crewmen looked out the window several times during the sleep period for reassurance that the lunar module was not starting to tip over.

Following transearth injection, the crew slept better than they had previously. The lunar module crewmen required one additional sleep period to make up the sleep deficit that was incurred while on the lunar surface.

The crewmen reported during postflight discussions that they were definitely operating on their physiological reserves because of inadequate sleep. This lack of sleep caused them some concern; however, all tasks were performed satisfactorily.

i. Apollo 15: Very little shift of the Apollo 15 crew's normal terrestrial sleep cycle occurred during the translunar and transearth coast phases of this mission. As a result, all crewmen received an adequate amount of sleep during these periods.

Displacement of the terrestrial sleep cycle during the three lunar surface sleep periods ranged from 2 hours for the first sleep period to 7 hours for the third sleep period. This shift in the sleep cycle, in addition to the difference between the command module and lunar module sleep facilities, no doubt contributed to the lunar module crewmen receiving less sleep on the lunar surface than was scheduled in the flight plan. However, the most significant factors causing loss of crew sleep were operational problems. These included hardware malfunctions as well

as insufficient time in the flight plan to accomplish assigned tasks. Lengthening the work days and reducing the planned sleep periods on the lunar surface, coupled with a significant alteration of circadian rhythm, produced a sufficient fatigue level to cause the lunar module crewmen to operate on their physiological reserves until they returned to the command module.

j. Apollo 16: In comparison to his Apollo 10 experience, the Commander slept better during all the scheduled Apollo 16 sleep periods. The Lunar Module Pilot slept well during all sleep periods except the first. However, the Command Module Pilot had uninterrupted sleep only two nights of the mission and, characteristically, would awaken about once every hour. He reported that he never felt physically tired nor had a desire for sleep.

On this mission, displacement of the terrestrial sleep cycle ranged from 30 minutes to 5 hours during translunar coast, and from 3-1/2 hours to 7 hours during the three lunar surface sleep periods. This shift in the sleep cycle on the lunar surface contributed to some loss of sleep; however, this was the first mission in which the lunar module crewmen obtained an adequate amount of good sleep while on the lunar surface. This assessment of the amount of sleep is based on a correlation of heart rate during the mission sleep periods with preflight sleep electroencephalograms and heart rates. The estimates of sleep duration made by ground personnel were in general agreement with the crew's subjective evaluations.

k. Apollo 17: As on previous missions, displacement of the terrestrial sleep cycle contributed to some loss of sleep for the Apollo 17 crew. In addition, changes to the flight plan occasionally impacted previously planned crew sleep periods. In general, however, an adequate amount of good sleep was obtained by all crewmembers during both translunar and transearth coast, as well as during lunar surface operations. All three crewmen averaged approximately 6 hours of sleep per day throughout the mission. Only during the first inflight sleep period was the amount of sleep obtained (approximately 3 hours) inadequate from a medical point of view.

### 8.2.5 Crew Illness and Medications

The only medical problem commonly shared by all of the flight crewmen was skin irritation caused by the biosensors. Skin cream was used to relieve this condition. Since each flight crew experienced a different set of problems requiring the use of medications, each mission is discussed separately.

a. Apollo 7: Three days prior to launch, the Commander and Lunar Module Pilot experienced slight nasal stuffiness and were successfully treated.

Approximately 15 hours after lift-off, the crew reported that the Commander had developed a bad head cold. Aspirin and decongestant tablets (Actifed) were taken for relief. The Command Module Pilot and Lunar Module Pilot experienced cold symptoms 24 hours later and used the same treatment.

Middle ear blockage was of concern because it was considered necessary for the crew to wear pressure suits during entry. Equalization of pressure within the middle ear cavities is difficult in the pressure suit with the helmet on. Consequently, 48 hours prior to entry, the decision was made that the crew would not wear helmets or gloves.

In the postflight physical examinations, the two crewmen who had experienced the most distressing inflight symptoms showed no obvious evidence of their colds. The other crewman did exhibit a slight amount of fluid in the middle ear.

b. Apollo 8: After the Commander's symptoms of motion sickness dissipated, he experienced symptoms of an inflight illness believed to be unrelated to motion sickness. When the Commander was unable to fall asleep 2 hours into his initial rest period, he took a sleeping tablet (Seconal) which induced approximately 5 hours of sleep, described as "fitful." Upon awakening, the Commander felt nauseated and had a moderate occipital headache. He took two aspirin tablets and then went from the sleep station to his couch to rest. The nausea, however, became progressively worse and he vomited twice. After termination of the first sleep period, the Commander also became aware of some increased gastrointestinal distress and was concerned that diarrhea might occur. No medication was taken for this illness, which was described as a "24-hour intestinal flu." (Just prior to launch, an epidemic of acute viral gastroenteritis lasting 24 hours was present in the Cape Kennedy area.)

c. Apollo 9: Three days before the scheduled launch, the Commander reported symptoms of general malaise, nasal discharge, and stuffiness. These common cold symptoms were not present on the physical examination performed the previous day. The Commander was treated symptomatically and his temperature remained normal throughout the course of his illness. Two days before the scheduled launch, the Command Module Pilot and the Lunar Module Pilot also became ill with common colds and were treated symptomatically. However, because the symptoms persisted, the launch was postponed for 3 days.

During the flight, the Lunar Module Pilot experienced motion sickness and vomited twice, once while preparing for transfer to the lunar module, and again after transfer. After about 50 hours of flight, the Lunar Module Pilot was still not feeling well but had experienced no further vomiting. He reported that his motion sickness symptoms subsided when he remained still. The Lunar Module Pilot took Seconal several times during the mission to induce sleep.

d. Apollo 10: The crewmen experienced abdominal rumblings caused by the ingestion of hydrogen gas present in the potable water, and were concerned that diarrhea might develop. Aspirin was taken occasionally by all crewmen.

e. Apollo 11: The Commander and Lunar Module Pilot each took one Lomotil tablet to prevent bowel movements when on the lunar surface. Four hours before entry, and again after splashdown, the three crewmen each took scopolamine/dextroamphetamine anti-motion-sickness tablets. Aspirin tablets were also taken by the crewmen.

f. Apollo 12: All crewmen took Actifed decongestant tablets to relieve nasal congestion at various times throughout the flight. The Lunar Module Pilot also took Seconal throughout most of the mission to aid sleep. Aspirin was taken occasionally by all the crewmen.

g. Apollo 13: Upon awakening on the second day of the mission, the Lunar Module Pilot took two aspirin to relieve a severe headache. After eating breakfast and engaging in physical activity, the Lunar Module Pilot became nauseated and vomited. One Lomotil tablet was taken by the Command Module Pilot after 98 hours of flight. All crewmen took scopolamine/dextroamphetamine anti-motion-sickness tablets prior to entry.

h. Apollo 14: No medications were used other than nose drops to relieve nasal stuffiness caused by the spacecraft atmosphere.

i. Apollo 15: Aspirin and nose drops were the only medications used. The Commander took 14 aspirin tablets during the last 4 days of the mission to relieve pain in his right shoulder that had developed after difficult deep core tube drilling on the lunar surface. The Command Module Pilot used nose drops just prior to earth entry to prevent possible middle ear blockage.

j. Apollo 16: The Lunar Module Pilot used three Seconal capsules for sleep. One capsule was taken on the night prior to lunar descent and the other two capsules were used for the first and second lunar surface sleep periods. In the postflight medical debriefing, the Lunar Module Pilot reported that the Seconal was effective in producing a rapid onset of good sleep.

k. Apollo 17: More medications were taken on Apollo 17 than on any of the previous missions. Seconal was used intermittently for sleep by all three crewmen and simethicone was used daily for symptomatic relief of flatulence. The Commander took a scopolomine/dextroamphetamine tablet on the second day of flight as a substitute for the simethicone tablets, which he could not initially locate.

The Command Module Pilot and the Lunar Module Pilot experienced one loose bowel movement each on the 11th and 12th days of flight, respectively. In each case, Lomotil was taken and was effective.

### 8.2.6 Cardiac Arrhythmias

Both of the Apollo 15 lunar surface crewmen demonstrated cardiac arrhythmias at various times during the mission. The Lunar Module Pilot experienced these irregularities during translunar and transearth coast, and during the lunar stay. The Commander experienced them only during transearth coast. A loss of body potassium during flight was considered to be an important factor in the genesis of the Apollo 15 arrhythmias. As a result, several changes were instituted on Apollo 16 to reduce the likelihood of inflight arrhythmias and to further investigate the causes of body potassium loss during space flight. These changes included provision of a high-potassium diet, commencing 72 hours prior to launch and continuing until 72 hours after the flight, and provision of cardiac medications (procaine amide, atropine, and Lidocaine) in the onboard medical kits. In addition, a daily high-resolution electrocardiogram was obtained from each crewman, and an accurate metabolic input/output report was transmitted daily during flight.

No medically significant arrhythmias occurred during the Apollo 16 and 17 flights, but isolated premature heart beats were observed in two of the three crewmen on each flight. The fact that the frequency (less than one per day) and character of these prematurities remained consistent with electrocardiographic data obtained on these same crewmen during ground-based tests clearly indicates that they were not related to or resultant from space flight. Apollo 16 postflight exchangeable body potassium intake apparently was effective in maintaining normal potassium balance.

Even though significant cardiac arrhythmias were not experienced on the Apollo 16 and 17 missions, their absence cannot be attributed to the high potassium diet because fatigue, stress, and excitement can also produce arrhythmias. The absence of arrhythmias on Apollo 16 and 17 can best be attributed to a combination of factors such as high dietary intake of potassium, better fluid and electrolyte balance, more adequate sleep, and less fatigue.

### 8.2.7 Postflight Medical Evaluation

Comprehensive medical evaluations were conducted immediately after recovery to determine any physical effects of the flight upon the crew and to detect and treat any medical problems. The medical evaluations included microbiology and blood studies, physical examination, orthostatic tolerance tests, exercise response tests, and chest X-rays. Although all of the crewmen were shown to be in good health, they exhibited varying degrees of fatigue and weight loss, and suffered varying degrees of skin irritation caused by the biosensors. The skin irritation subsided within 48 hours without medical treatment.

All crewmen tested demonstrated some degree of cardiovascular deconditioning during the lower body negative pressure measurements and bicycle ergometry tests, as compared to preflight tests. Individual variations in the time required to return to preflight baseline levels were observed, taking from 2 days to 1 week. Both the Apollo 15 Commander and Lunar Module Pilot had a cardiovascular response to the bicycle ergometry tests not observed after previous flights. This response was characterized by an almost normal response at low heart rate levels and progressively degraded response at the higher heart rate levels. The lack of a significant decrement in the Apollo 16 Command Module Pilot's exercise performance was a surprising postflight finding. Because of the high degree of preflight aerobic capacity demonstrated by this crewman, a significant postflight decrement had been anticipated. One Apollo 17 crewman was within his preflight bicycle ergometry baseline when tested postflight; the other two crewmen returned to their preflight baseline by the second postflight day.

As already noted, the Apollo 10 cabin atmosphere became contaminated with fiberglass particles. Postflight examinations of the Apollo 10 crewmen showed no significant changes attributable to their exposure to the fiberglass. Four days after recovery, the Lunar Module Pilot developed a mild infection in his left nostril which may have been caused by a small piece of fiberglass; he responded rapidly to treatment.

Other significant immediate postflight findings were as follows.

a. A definite residual of an inflight upper respiratory infection was noted in one of the Apollo 7 crewmembers.

b. The Apollo 9 Commander suffered from bilateral aerotitis media. This condition responded rapidly to decongestant therapy and cleared after 2 days.

c. The Apollo 11 Commander had a mild serous otitis media of the right ear but no treatment was necessary when he found that he could clear his ears satisfactorily.

d. The Apollo 12 Lunar Module Pilot had a small amount of clear fluid with air bubbles in the middle ear cavity which disappeared after 24 hours of decongestant therapy.

e. The Apollo 13 Lunar Module Pilot had a urinary tract infection.

f. The Apollo 14 Commander and Command Module Pilot each exhibited a small amount of clear, bubbly fluid in the left middle ear cavity with slight reddening of the ear drums. These findings disappeared in 24 hours without treatment. The Lunar Module Pilot had moderate eyelid irritation in addition to slight redness of the eardrums.

g. The Apollo 15 Commander had hemorrhages under some of his fingernails of both hands and a painful right shoulder. These hemorrhages were attributed to an insufficient arm-length size of his pressure suit which caused the fingertips to be forced too far into the gloves during hardsuit operations. The painful right shoulder was due to a muscular/ligament strain which responded rapidly to heat therapy.

h. The Apollo 16 Commander had some sinus congestion which responded to medication, and also a slight reddening and retraction of the right eardrum.

i. The Apollo 17 Commander and Lunar Module Pilot both exhibited subunguinal hematomas from the pressure suit gloves; these were more extensive and vivid on the Lunar Module Pilot.

j. The Apollo 17 Commander had a herpetic lesion on the right side of the upper lip, which was approximately 72 hours old at the time of recovery.

During the landing of the Apollo 12 command module, a camera came off its window bracket and struck the Lunar Module Pilot on the forehead, causing him to lose consciousness for about 5 seconds. He sustained a 2-centimeter laceration over the right eyebrow. The cut was sutured soon after the crew was recovered and it healed normally.

Delayed postflight minor illnesses occurred as follows:

a. Six days after recovery of Apollo 8, the Lunar Module Pilot developed a mild pharyngitis which evolved into a common cold and nonproductive cough. He recovered completely after 6 days of treatment. The Commander developed a common cold 12 days after the flight, and treatment resulted in complete recovery 7 days later.

b. Four days after recovery, the Apollo 9 Lunar Module Pilot developed an upper respiratory infection with a secondary bacterial bronchitis. He was treated with penicillin and was well 7 days later. The Commander developed a mild upper respiratory syndrome 8 days after recovery. He was treated and recovered 4 days later. Both of these cases were determined to be type-B influenza virus.

c. On the day after recovery, the Apollo 12 Commander developed a left maxillary sinusitis which was treated successfully with decongestants and antibiotics.

## 8.3 BIOMEDICAL EQUIPMENT PERFORMANCE

### 8.3.1 Instrumentation

In general, the biomedical instrumentation system worked well, although some minor losses of data were experienced throughout the program. Problems with lead breakage and pin connector disconnection encountered on the Apollo 7 mission were corrected for subsequent flights. Some degradation of physiological data was caused by loose biosensors, but restoration of good data was usually obtained by reapplication of the sensors. Sponge/pellet electrodes were used in the

bioharness for the first time on the Apollo 15 mission. This type of biosensor was developed to reduce skin irritation produced by the continuous-wear electrodes used previously. The quality of the data obtained with the new electrodes was good and less skin irritation was seen at the biosensor sites than had been seen after previous missions. Physiological data losses resulting from trapped air under the electrodes were not experienced after the Apollo 15 mission because small vents were added to the electrodes.

### 8.3.2 Medication Packaging

All the medications in tablet and capsule form were packaged in individually sealed plastic or foil containers. On the Apollo 11 mission when the medical kit in the command module was unstowed, the packages had expanded because insufficient air had been evacuated during packaging. This ballooning prevented restowage of the items in the kit until a flap was cut away from the kit. Venting of each of the plastic or foil containers prevented this problem from recurring on subsequent flights. The nasal spray bottles in the inflight medical kits were replaced by dropper bottles for Apollo 14 and subsequent missions because previous crews had reported difficulties in obtaining medication from spray bottles in zero-gravity.

## 8.4 FOOD

The Apollo program food was primarily of the freeze-dried variety which could be reconstituted with water. This type is low in weight and volume, is stable without refrigeration, can be readily packaged, and can withstand the stresses and environmental conditions of space flight. Preparation of these meals requires cutting of the package, measuring and adding water, kneading the mixture, and waiting for the rehydration process to be completed. Although the rehydrated foods were generally the most satisfactory, the texture and flavor of this type of food was affected by the command module potable water (fuel cell product water). Complete rehydration was prevented because excessive hydrogen gas dissolved in the water expanded the packages, reducing the transfer of water to the food. Offensive tasting food resulted from ionic contaminants in the water and difficulties in the chlorination procedures. These problems were alleviated on the later flights because of improvements in the potable water system and methods of treatment.

Bite-size compressed or freeze-dried products with special coatings to inhibit crumbling were also used. These foods, designed to have an average moisture content of only 2 to 3 percent, were intended to be rehydrated in the mouth with saliva or with small quantities of water when saliva was inadequate. In general, the crews found the bite-size foods to be too dry and, therefore, undesirable.

Special thermostabilized wet-pack foods were added to the flight menus to provide variety, improved taste, and a closer similarity to conventional food. Both bite-size and wet-pack foods required minimum preparation time and, therefore, were more convenient than the rehydrated meals. The main disadvantages of the wet-pack foods were that some of the foods which are normally eaten hot (such as potatoes and gravy) were not as palatable when eaten cold.

In an attempt to make the food pleasant to the crew, menus were designed to meet the psychological as well as the physiological needs of each crewmember. Prior to flight, each crewman was provided with a 4-day supply of flight food for menu evaluation and selection. Flight menus were them established to provide each crewman with adequate nutrients to meet basic physiological requirements. No foods were included in the final flight menus which had been rejected during the preflight evaluations.

A control diet was used for the first time on Apollo 16 to insure that each crewman was in an optimum nutritional condition prior to launch, and to facilitate postflight interpretation of medical data. The diet was initiated 3 days prior to launch and was terminated 2 days after recovery. In addition, food and fluid intake were closely monitored during the flight.

In-suit food bars were used by the Apollo 15 and Apollo 17 lunar module crewmen, and in-suit beverage assemblies were used by the Apollo 16 and Apollo 17 lunar module crewmen. The beverage assembly consisted of a drinking device and a 32-ounce bag containing water or potassium-fortified orange drink. Several minor problems were experienced in using the assembly during

the Apollo 16 mission. Inadvertent activation of the tilt valve by the communications cable or the microphone caused some release of fluid into the Lunar Module Pilot's helmet prior to lunar landing. Prior to the first extravehicular period, the Commander installed the in-suit beverage assembly after donning his pressure suit and could not properly position it. Thus, he was unable to consume any fluid during the first extravehicular activity.

Four different types of Skylab food packages were evaluated on Apollo 16 for function under zero-gravity conditions by each crewman. These included a rehydratable soup package, a beverage package, a peanut wafer package, and a liquid table-salt package.

The menus for the Apollo 17 mission were designed to meet physiological requirements of each crewmember as well as requirements of a food compatibility assessment study. This study was implemented (1) to determine metabolic requirements of space flight, (2) to assess compatibility of menus with respect to gastrointestinal function, and (3) to acquire data on the underlying endocrinological control of metabolism.

Negative nitrogen and potassium balances occurred during the Apollo 17 flight and confirmed a loss in total body protein. In addition, a loss of body calcium and phosphorus was demonstrated. This is consistent with previous flights. Although some of the observed weight loss can be attributed to changes in total body water, the hypocaloric regimen in conjunction with the well-known tendency to lose body tissue under hypogravic conditions indicates that a considerable portion of weight loss is from fatty and muscle tissues.

Water intake and output data were generally consistent throughout the Apollo 17 flight. However, when insensible water loss is considered, the crew on this mission were in a state of mild negative water balance. These data are consistent with water-balance data from Apollo 16. During the immediate postflight period, only the Lunar Module Pilot's urine volume was significantly decreased; the other two remained normal. This postflight finding, along with the slight decreases in total body water, confirms the normal-to-decreased level of antidiuretic hormone. This observation differs from that of Apollo 15 where high urine volumes and increased levels of antidiuretic hormone were observed. The more complete data from the Apollo 17 mission suggests that the major weight loss resulted from loss of tissue mass rather than loss of total body water. The lack of weight gains during the first 24 hours postflight provides additional evidence that fatty and muscle tissues were the predominant components of the observed weight loss.

## 8.5 APOLLO LUNAR QUARANTINE PROGRAM

The Apollo lunar quarantine program was instituted to deal with the remote possibility that micro-organisms hazardous to life on earth could be introduced into the biosphere by the crewmembers of lunar landing missions and the material brought back by them. Representatives of the National Academy of Sciences, the U.S. Public Health Service, the U.S. Department of Agriculture, and the U.S. Department of the Interior reviewed and approved plans proposed by NASA; the details of implementation of the program were the responsibility of NASA. Much of the following discussion has been excerpted from reference 8-13.

### 8.5.1 Quarantine Program Guidelines

The coordination of the multidisciplinary and often contradictory requirements of the lunar quarantine programs presented a unique series of problems. Many of these problems were associated with the hypothetical nature of an unknown lunar hazard. Therefore, if precise scientific and technical decisions were to be made, basic assumptions and guidelines had to be followed. The basic guidelines that were established for development of the program were as follows.

a. Hazardous, replicating micro-organisms exist on the moon.

b. The preservation of human life should take precedence over the maintenance of quarantine.

c. Biological containment requirements should be based on the most stringent means used for containment of infectious terrestrial agents.

d. The sterilization requirements should be based on the methods required for the destruction of the most resistant terrestrial forms.

e. Hazard detection procedures should be based on an alteration of the ecology and classical pathogenicity.

f. The extent of the biological test protocol would be limited to facilities approved by the Congress of the United States, to well-defined systems, and to biological systems of known ecological importance.

### 8.5.2 Program Elements

8.5.2.1 Lunar-surface contamination.- Nations involved in the exploration of extraterrestrial bodies have agreed to take all steps that are technically feasible to prevent the contamination of these bodies during exploration. The primary reasons for preventing contamination of extraterrestrial bodies are (1) to ensure that scientific analyses for the detection of viable life originating from an extraterrestrial body can be conducted without the complications associated with terrestrial contamination of such a body, and (2) to ensure that, if life does exist on an extraterrestrial body, the ecological balance existing on that body is not disturbed by the introduction of terrestrial microbial life-forms.

Several problems complicate the implementation of this agreement. First, if unmanned landers are used, the problems associated with minimizing or eliminating contamination sources are principally those technological problems involved with the design and fabrication of hardware that will withstand decontamination or sterilization or both. The problems associated with this technology development should not be minimized, as evidenced by the amount of engineering and design effort already expended in planning for unmanned vehicle exploration of other planets. However, these decontamination problems are simple when compared to those associated with manned exploration of other planets, because man is a virtual factory for the production and dissemination of viable microbial contaminants. The other main problem associated with preventing contamination of extraterrestrial bodies is the probability that a terrestrial life-form can establish itself and survive in the alien environment.

The physical evidence concerning the environment of the moon indicated that the probability was extremely small that a terrestrial life-form could establish itself. This, in addition to the low probability that a viable ecological system could exist on the moon, resulted in the relaxation (but not elimination) of the requirements for the prevention of lunar surface contamination. The Apollo crewmembers represented the prime source of contamination of the lunar surface. Three other sources were determined to be (1) waste products such as feces, urine, and residual food; (2) viable terrestrial micro-organisms released during lunar module depressurization; and (3) micro-organisms present in the lunar module waste-water system. Procedures were defined to eliminate massive contamination of the lunar surface from these three sources.

8.5.2.2 Lunar sample collection.- Because one of the primary objectives of the Apollo program was the collection and return of lunar material, advisory groups were established to determine the requirements for sample collection. One requirement was that lunar samples should be collected by using only sterile tools and should be returned to the Lunar Receiving Laboratory in a sterile environment. The collection of lunar samples with hardware that contained minimum organic and inorganic contamination was also established as a physical science requirement. The types of materials that could be used for fabricating tools and other items that would come in contact with lunar material were severely limited by the scientific requirements and weight restrictions. A high-temperature bakeout under vacuum conditions was the best method for removing volatile terrestrial contaminants from the hardware. This treatment, at a sufficient temperature for a sufficient period of time, also satisfied the sterilization requirements for the hardware.

The procedures and hardware necessary for the stowage of the collected lunar samples were considered next. The physical scientists decided that the lunar samples should be transported to earth under environmental conditions as nearly like those on the moon as was technically feasible. This decision necessitated the design and fabrication of a pressure vessel that could be filled with lunar samples and sealed on the lunar surface, and in which the internal environment could be maintained throughout the sample transfer from the lunar surface to the Lunar Receiving

Laboratory. Because the pressure vessel had to be an ultraclean, gastight container, no additional requirements were necessary in terms of quarantine control. The Apollo lunar sample return containers (fig. 3-14) were designed to contain approximately 1 cubic foot of lunar material and to be sealed on the lunar surface.

8.5.2.3 Inflight contamination control.- It was anticipated that during lunar surface extravehicular operations the exterior of the crewmen's suits and the equipment used on the lunar surface would become contaminated with lunar material. As a result, specific hardware and procedures were developed to minimize the transfer of contamination from these sources to the biosphere. The procedures were initiated before the crewmen entered the lunar module after each extravehicular activity. Each crewman brushed the other crewman's suit to remove as much loose lunar material as possible. A footpad was provided on the steps of the lunar module so that lunar material could be scraped from the boots. Also, the sample return containers and other items were brushed off before being returned to the lunar module. Once inside the lunar module, all items to be transferred to the command module were placed in sealed Beta-cloth bags to minimize the leakage of lunar dust into the lunar module or command module environment. Items that were not transferred to the command module, such as the gloves and overboots, were discarded onto the lunar surface. After the last hatch closure on the lunar surface, the crewmembers cleaned the interior surfaces of the lunar module using a vacuum cleaner in conjunction with the environmental control system.

After the lunar module ascent from the lunar surface and rendezvous with the command module, the lunar module crewmen transferred hardware and lunar materials to the command module. Because the command module entered the biosphere, procedures were developed to minimize the possible transfer of lunar contaminants from the lunar module to the command module. These procedures included wiping and vacuuming all items being transferred from the lunar module to the command module, establishing a positive air flow from the command module to the lunar module to prevent atmospheric contaminants in the lunar module from entering the command module, and bagging and storing items after transfer to the command module. When the transfer of the crewmembers and all hardware to the command module was completed and the lunar module had been separated from the command module, the command module interior was vacuumed and cleaned.

Other potential quarantine considerations involved the exterior of the command module. Although the command module exterior was considered to be an unlikely source of potential contamination, a concern was that lunar-surface contaminants would be transferred from the lunar module to the command module exterior during docking. However, this possibility was remote because the docking area of the lunar module was never in direct contact with the lunar surface and was subjected to solar radiation during the lunar surface operations.

8.5.2.4 Return to the terrestrial biosphere.- Once the command module containing the crewmen and lunar samples entered the terrestrial environment, careful control of potential lunar contamination was required. Because the exterior of the command module was not considered to be a source of extraterrestrial contamination, it was determined that landing in the ocean could occur without any special precautions against contamination. After landing, the command module environmental control system was to be deactivated and a postlanding ventilation system was to be activated. The system consisted of a fan that circulated fresh air from the outside through the command module and forced the air to the outside through a vent valve. The system, which had been incorporated in the command module before the lunar quarantine requirements had been formulated, presented a problem in that potentially contaminated air would be exhausted from the command module. The postlanding ventilation system was not modified, however, primarily because the measures taken to minimize possible contamination of the command module atmosphere, and the use of protective garments and biorespirators by the crew were judged to be adequate protective measures.

Next, in terms of contamination control, the procedures for removing the crewmembers, lunar samples, and hardware items from the command module and transporting them to quarantine isolation in the Lunar Receiving Laboratory were developed. The crewmembers left the command module before it was lifted to the deck of the recovery vessel. Swimmers assisted the crewmembers in egressing the command module. The swimmers were protected from potential lunar contamination by using their breathing apparatus during installation of the flotation collar on the command module. Furthermore, the swimmers sprayed areas of potential contamination, such as the hatch and docking areas, with a germicidal solution to decontaminate these areas before the hatch was opened. The crewmembers emerged from the command module wearing biological isolation garments which effectively

prevented the transfer of microbial contaminants from the respiratory tract and body surface to the exterior environment. After pickup by helicopter, the crewmen, still wearing the biological isolation garments and physically isolated from the helicopter crewmen, were transported to the recovery vessel. The flight surgeon, who was quarantined with the crewmembers, was also on board the helicopter. Upon arrival at the primary recovery vessel, the helicopter was towed close to a mobile quarantine facility and the crewmembers and flight surgeon walked to the facility. The deck area traversed by the crewmembers during the transfer was decontaminated.

The command module hatch was sealed after egress of the crewmen, and the area surrounding the hatch was decontaminated with a germicide. All decontamination equipment and the life rafts used by the Apollo crewmen were then sunk at sea. Later, the command module was hoisted aboard the primary recovery vessel and placed near the mobile quarantine facility. A flexible plastic tunnel was then installed between the command module and the mobile quarantine facility to allow removal of lunar samples and other data by a recovery technician. The command module hatch was then sealed, the surrounding area was decontaminated, and the tunnel was drawn inside the mobile quarantine facility.

Because some experiments planned for the lunar materials were time-critical, the samples removed from the command module were packaged in vacuum-sealed plastic bags, sterilized, and air-locked out of the mobile quarantine facility. The packages were placed in shipping containers and transported immediately by aircraft to the Lunar Receiving Laboratory. The crewmembers, the flight surgeon, and the recovery technician remained in the mobile quarantine facility until the primary recovery vessel reached the nearest port. There, the mobile quarantine facility and the occupants were transferred to a transport plane and flown to Houston, Texas. Upon arrival, the mobile quarantine facility was transported to the Lunar Receiving Laboratory. The operations performed in the Lunar Receiving Laboratory are described in section 11.

## 8.6 SPECIAL MEDICAL STUDIES

Special medical studies conducted in support of the Apollo program included a crew microbiology program and a virology program.

### 8.6.1 Microbiology

The microbiology program was instituted in response to a requirement by the Interagency Committee on Back Contamination that identified a need to produce a catalog of micro-organisms carried to the moon by Apollo crewmen. The primary use of the catalog was to provide a means of recognizing whether a micro-organism, if found in lunar material, was of terrestrial or extraterrestrial origin. The catalog was also used for operational medical purposes.

The return of sterile lunar soil indicated that the preventive measures and handling methods developed to prevent contamination of lunar soil were successful. If a terrestrial micro-organism had been found in lunar soil, the catalog would have been extremely useful as supportive evidence to the laboratory analysis of the contaminant. The micro-organism could possibly have been shown to possess the same morphological and biochemical characteristics as one identified prior to a particular mission.

The operational medical objectives were the same for each flight. The primary objective was always to detect the presence of potentially pathogenic micro-organisms on the crewmen so that possible medical problems could be recognized and preventive measures established. A second objective was to identify medically important micro-organisms from crew specimens collected as a result of illness events so that the flight surgeon could use these data to aid in diagnosis and treatment of inflight illnesses. A third objective was to collect microbial data which could aid in explaining the responses of the crew microbial autoflora to the space flight environment and the resultant effects on crewmembers. In order to accomplish the three stated objectives, a variety of specimens were collected. In general, eight body surface swabs as well as fecal, urine, and gargle samples were collected from each of the crewmembers. Although the exact sampling schedule varied from flight to flight, specimens were usually obtained approximately 1 month prior to launch, 2 weeks prior to launch, the morning of launch day, and immediately upon recovery. In addition to the specimens obtained from the crewmen, swab samples were obtained

from selected sites in the command module cabin immediately prior to launch and after recovery. Following identification of all micro-organisms, the laboratory data on each isolate were stored in a computer. A computer program was developed to provide a "match test" of the stored data with data that might be collected from an unknown micro-organism. The program was designed to search the catalog until an identification was made of those micro-organisms that had the greatest number of similar characteristics. Although no micro-organisms were found in the lunar material, significant medical data were produced. Specific observations are summarized for Apollo missions 7 through 12, and 13 through 17.

8.6.1.1 Apollo 7 through 12.- Considerable variation in the microfloral response was observed. *Staphylococcus aureus* was shown to increase in number, and transfers were effected between crewmen during two of the six missions. Although the micro-organism was present on two of the remaining four missions, an increase was not detected postflight. The variables of host susceptibility, external environmental factors, and ecological relationships between competing species of micro-organisms are undoubtedly responsible for the observed response of the microflora. Increase in numbers and spread of *Aspergillus fumigatus* and beta-hemolytic streptococci were also shown on Apollo 7. The increase was not detected on any of the remaining five missions.

Preflight and postflight microbial analysis of samples obtained from the command module showed that a loss of the preflight micro-organisms occurs during the mission. The preflight microflora at the sampling sites were replaced by micro-organisms from the crew microflora.

8.6.1.2 Apollo 13 through 17.- Immediately upon return from a space flight, species of micro-organisms were recovered from a particular crewmember that had not previously demonstrated the presence of this species. This phenomenon occurred on all flights with several different species, implying that intercrew transfer of microbes is a regular occurrence during space flight. Transfer of micro-organisms between crewmembers and the command module or extravehicular clothing is even more obvious because the preflight microbial loads of these inanimate objects are quite different from the microbial loads of the crewmembers. Occupation of the command module during the space flight does not generally effect a significant change in the numbers of different contaminating species. However, there is an obvious loss of the original contaminants on each site with a concurrent invasion of microbes belonging to different species. In addition, there is a buildup of medically important species during the space flight. In particular, the buildup of *Proteus mirabilis* on the urine collection device has been a recurrent problem throughout most of the Apollo missions. Close contact of susceptable parts of the body with these contaminated urine collection devices presents a significant medical hazard.

### 8.6.2 Virology

The virology program conducted in support of the Apollo missions consisted of characterization of the viral and mycoplasma flora of the crewmembers; viral serology on crewmembers, crew contacts and key mission personnel; and an analysis of specimens obtained as a result of crew illnesses, the mission personnel surveillance program, and the flight crew health stabilization program. Serology studies were initiated with Apollo 14; the mission personnel surveillance program was in effect during Apollo missions 11 through 14; and the flight crew health stabilization program was in effect during Apollo missions 14 through 17.

The characterization of the viral and mycoplasma flora was accomplished by utilizing state-of-the-art procedures and consisted of challenging tissue cultures, embryonated eggs, suckling mice, and mycoplasma media with specimens obtained at various preflight and postflight times.

## 8.7 BIOCHARACTERIZATION OF LUNAR MATERIAL

Immediately after lunar samples were unpacked, small, yet representative, samples were distributed to biological test laboratories within the Lunar Receiving Laboratory where the samples were assessed to insure that they were not biologically hazardous, and to otherwise study the effects of lunar material on various plant and animal species. As mentioned previously, the containment aspects of the quarantine program were discontinued after the Apollo 14 postflight evaluation. As a result, the number of tests was substantially reduced for the Apollo 15 studies, and the scope of the testing was further reduced for the final two missions.

### 8.7.1 Microbiology

Microbiological tests for viruses, bacteria, and other agents were performed on specimens from the crew, on lunar samples, and on various test species that had been exposed to lunar material. The host systems used for the isolation of viruses from crewmembers and contacts within the crew reception area helped the biologists isolate and identify member viruses representing essentially all known groups capable of producing acute illnesses in human populations. In addition to the host systems used for crew virology, supernatant fluids from lunar soil suspensions were tested in tissue cultures of mammals, birds, and cold-blooded species.

8.7.1.1 Virological investigations.- The virological studies conducted on the lunar material obtained during the Apollo missions consisted primarily of analyses for replicating agents. The materials tested and the systems challenged are presented in table 8-II. The supernatant fluid obtained from centrifuging 50 percent weight/volume suspensions of lunar material in sterile media was used as the inoculum. There was no evidence of replicating agents in any of the systems utilized.

Additional studies were performed on the Apollo 15 lunar material to assess alterations in host susceptibility. No significant differences were observed between terrestrial basalt (simulated lunar material) and actual lunar material suspensions. Colonies grown on agar containing lunar material were similar to those grown on agar medium alone or agar containing simulated lunar material. Another study was conducted to determine the effect of lunar materials on the stability of poliovirus. No significant differences were detected between the simulated lunar material and the actual lunar material suspensions.

8.7.1.2 Bacteriological and mycological investigations.- Samples from all six lunar exploration missions were examined for the presence of biologically formed elements or viable organisms. No evidence of viable organisms was obtained from any of these analyses.

Following incubation of the lunar material in the culture media complexes, microbial growth dynamics studies were conducted with known test species to evaluate the possible presence of toxic factors. Only extracts of culture media which had been in contact with a mixture of lunar material from both Apollo 11 core tubes proved to be toxic to all species tested (refs. 8-14 and 8-15). Attempts to reproduce this toxic effect with individual Apollo 11 core samples obtained at other parts of the core stem and analyzed under somewhat different conditions were unsuccessful. In all, 48 different lunar samples, collected to a depth of 297 centimeters from six different landing sites, were examined.

### 8.7.2 Zoology

Various types of animals and invertebrates were exposed to lunar material to test for possible harmful effects. Maintenance of germ-free animals under positive pressure conditions was forbidden, and a special procedure using a double biological barrier was developed. The germ-free mouse was chosen as the prime test subject to represent the mammalian portion of the zoological program. A second category of the program was the exposure of various aquatic species to lunar material. These test subjects included marine and freshwater species and ranged from protozoa to the oyster, the shrimp, and various types of fish. A third category was the terrestrial invertebrate, represented by the insects. It was impossible to cover all the taxa in this enormous group, but the three major orders were represented by the German cockroach, the fly, and the greater wax moth. The animals were exposed orally and by inhalation, injection, and direct contact.

Following the Apollo 11, 12 14, and 15 missions, fifteen species of animals representing five phyla were exposed to untreated lunar material. These tests were complementary to the other protocols and were designed to detect any viable or replicating agents capable of infecting and multiplying in animals. Results of exposure of the various animal species were uniformly negative (refs. 8-16 and 8-17). No viable or replicating agents, other than identifiable terrestrial micro-organisms, were ever recovered or observed in the test animals. In addition, only minimal and transitory inhibition or toxicity followed exposure of some of the animals to the lunar material.

TABLE 8-II.- SYSTEMS CHALLENGED IN THE VIROLOGICAL ANALYSES OF LUNAR MATERIAL OBTAINED DURING THE APOLLO MISSIONS

| Mission | Number of samples tested | Tissue cultures | Systems challenged | | |
|---|---|---|---|---|---|
| | | | Embryonated eggs | Suckling mice | Mycoplasma media |
| 11 | 3 | African green monkey kidney, primary human embryonic kidney, diploid human embryonic lung, primary bovine embryonic kidney, primary duck embryonic fibroblast, rainbow trout gonadal tissue, *Pimepholes promelas*, grunt fin, *Haemulon sciuras* | X | | X |
| 12 | 2 | African green monkey kidney, primary human embryonic kidney, diploid human embryonic lung, heteroploid bovine kidney, heteroploid porcine kidney, primary duck embryonic fibroblast, rainbow trout gonadal tissue, *Salmo gairdneri*, fathead minnow, *Pimepholes promelas*, grunt fin, *Haemulon sciuras* | X | | X |
| 14 | 6 | African green monkey kidney, primary human embryonic kidney, diploid human embryonic lung, heteroploid bovine kidney, heteroploid porcine kidney, primary duck embryonic fibroblast, rainbow trout gonadal tissue, *Salmo gairdneri*, fathead minnow, *Pimepholes promelas*, grunt fin, *Haemulon sciuras* | X | X | X |
| 15 | 1 | African green monkey kidney, primary human embryonic kidney, diploid human embryonic lung | X | X | X |
| 16 | 1 | African green monkey kidney, primary human embryonic kidney, diploid human embryonic lung | X | X | X |
| 17 | 1 | African green monkey kidney, primary human embryonic kidney, diploid human embryonic lung | X | X | X |

Following relaxation of the containment requirements after the Apollo 14 mission, life-span studies were initiated with germ-free mice inoculated with lunar material. Classical inflammatory reactions were noted and lunar fine material was observed to persist for the life of the animal (20 months). The observations suggest the lunar fine material is relatively insoluble in tissue and that, while acting as a low-grade irritant, it has little tendency to evoke reactive fibrosis. The significance of such a chronic low-level stimulus and the various factors governing the retention, elimination, and turnover of lunar fine material in mammalian tissue are not clear at this time.

### 8.7.3 Botany

The botany program emphasized exposure of 33 plant species to lunar samples for the detection of possible plant pathogens. Sterile cabinets were maintained to grow pure cultures of algae and diatoms, to germinate surface-sterilized seeds, to grow pathogen-free seedlings, and to develop tissue cultures, all of which were exposed to lunar material in various forms.

The same materials and methods were used in botanical investigations following all of the lunar exploration missions, except that fewer species were employed in the studies for the last three missions. Emphasis in these latter investigations was placed upon collection of more definitive data on changes of pigmentation and cytoplasm density of lunar or terrestrially treated cells, tissues, and whole plants. Methods unique to these studies are described in references 8-18 through 8-22. Of potential interest was the application of many principles of germ-free animal research to the culture of the large number of plant seedlings required for the biocharacterization program. Lunar samples used in these studies were either composites of representative rock fragments and surface fines (Apollo 11, 12 and 14), or composites of surface fines (Apollo 15, 16 and 17). Descriptions of the terrestrial controls may be found in references 8-23.

Treatment of algal cultures with lunar material caused growth inhibition in dense cellular suspensions and growth stimulation in cultures grown on semisolid mineral media. Growth promotion was evident by marked increase in cell density in areas adjacent to lunar particles. Treatment of algal cells by exposing them to lunar material suspended via gently agitation resulted in cultures having higher respiration rates than untreated controls. Microscopical examination of treated cultures revealed no significant differences between cells treated with lunar material or terrestrial material.

The fern, *Onoclea sensibililis L.*, which was tested with each composite lunar sample, appeared to be the most sensitive plant for demonstrating that lunar material can act as a source of nutrients for plants. Clumps of spores germinating on lunar material placed within a well cut into mineral agar showed a several-fold increase in mass. The resulting gametophytes were also greener than those treated with terrestrial basalts. Other lower plants such as *Lycopodium cernuum L.* and *Marchantia polymorpha L.* (liverwort) exhibited similar stimulation. Within the treated plants, measurements of chlorophyll-a showed significantly higher concentrations of the pigment, but not chlorophyll-b or carotenoids.

Seeds germinated in the presence of lunar materials grew vigorously and absorbed significant quantities of aluminum, chromium, iron and titanium (ref. 8-21) and a variety of others including rare earth elements. In addition, cabbage and brussels sprouts absorbed large amounts of manganese. Lettuce seedlings generally did much better in the presence of lunar material.

Germ-free plants of bean, citrus, corn, sorghum, soybean, tobacco and tomato showed no deleterious effect when their leaves or roots were treated with 0.2 gram of lunar material per specimen. Plants of citrus, corn and soybean appeared to grow consistently better if treated in the sand-water culture system originally described by Hoagland and Arnon (discussed in ref. 8-18). Histological specimens taken from lunar treated plants revealed no deleterious effects of prolonged contact between lunar particles and leaf, meristematic, or root cells.

Twelve plant tissue culture systems employed in the biocharacterization program (ref. 8-20) appeared to be the most useful for studying cell-lunar particle interactions. Tobacco cells treated with lunar material accumulated approximately 30 percent more chlorophyll-a than untreated ones (ref. 8-23). Relative and absolute concentrations of fatty acids and sterols were changed by lunar-material treatment (ref. 8-24). Many cellular differences were noted. Both stationary and suspension-cultures of lunar-material-treated tobacco tissue cultures exhibited

an increased maturation of chloroplasts, and apparent secretory activity (ref. 8-25). Pine cells, on the other hand, exhibited a remarkable increase in tannin accumulation but not fatty acids or sterols.

## 8.8 REFERENCES


8-1. Apollo 7 Mission Report. NASA Johnson Space Center Report MSC-PA-R-68-15, December 1968.

8-2. Apollo 8 Mission Report. NASA Johnson Space Center Report MSC-PA-R-69-1, February 1969.

8-3. Apollo 9 Mission Report. NASA Johnson Space Center Report MSC-PA-R-69-2, May 1969.

8-4. Apollo 10 Mission Report. NASA Johnson Space Center Report MSC-00126, August 1969.

8-5. Apollo 11 Mission Report. NASA Johnson Space Center Report MSC-00171, November 1969.

8-6. Apollo 12 Mission Report. NASA Johnson Space Center Report MSC-01855, March 1970.

8-7. Apollo 13 Mission Report. NASA Johnson Space Center Report MSC-02680, September 1970.

8-8. Apollo 14 Mission Report. NASA Johnson Space Center Report MSC-04112, May 1971.

8-9. Apollo 15 Mission Report. NASA Johnson Space Center Report MSC-05161, December 1971.

8-10. Apollo 16 Mission Report. NASA Johnson Space Center Report MSC-07230, August 1972.

8-11. Apollo 17 Mission Report. NASA Johnson Space Center Report JSC-07904, March 1973.

8-12. Biomedical Results of Apollo. NASA SP (number not assigned), 1975.

8-13. Wooley, B. C.: Protection of Life and Health. Apollo Experience Report, NASA TN D-6856, June 1972.

8-14. Taylor, G. R.; Ferguson, J. K.; and Truby, C. P.: Methods used to monitor the microbial load of Returned Lunar Material. Appl. Microbiol. vol. 20, no. 2, 1970, pp. 271-272.

8-15. Taylor, G. R.; Ellis, W. L.; Arredondo, M.; and Mayhew, B.: Growth Response of *Pseudomonas Geruginosa* (ATCC 15442) to the Presence of Lunar Material. Bacterial Proc. 1970, p. 42.

8-16. Simmonds, R. C.; Holland, J. M.; Young, E. L.; and Boyd, J. F.: Animal Maintenance for Biomedical Evaluation of Lunar Material. J.A.V.M.A. vol. 161, 1972, pp. 720-727.

8-17. Benschoter, C. A.; Allison, T. C.; Boyd, J. F.; Brooks, M. A.; et al.: Apollo 11: Exposure of Lower Animals to Lunar Material. Science. vol. 169, 1970, pp. 470-472.

8-18. Walkinshaw, C. H.; Sweet, H. C.; Venketeswaran, S.; and Horne, W. H.: Results of Apollo 11 and 12 Quarantine Studies on Plants. Bioscience. vol. 20, 1970, pp. 1297-1302.

8-19. Walkinshaw, C. H.; Wooley, B. C.; and Bozarth, G. A.: Technology Advancements in the Growth of Germ-Free Plants at the Manned Spacecraft Center. In: Germ-Free Research Biological Effect of Gnotobiotic Environments. Academic Press, 1973.

8-20. Walkinshaw, C. H.; Venketeswaran, S.; Baur, P. S.; Hall, R. H.; et al.: Effect of Lunar Materials on Plant Tissue Cultures. Space Life Sciences. vol. 4, 1973, pp. 78-79.

8-21. Walkinshaw, C. H.; and Johnson, P. H.: Analysis of Vegetable Seedlings Grown in Contact with Apollo 14 Lunar Surface Fines. Hort. Science. vol. 6, 1971, pp. 532-535.

8-22. Walkinshaw, C. H.; Johnson, P. H.; and Venketeswaran, S.: Elemental Abundances in Callus Tissues of Carrot, Pine, Rice, Soybean, and Tobacco. In Vitro. vol. 7, 1972, pp. 391-396.

8-23. Johnson, P. H.; Walkinshaw, C. H.; Martin, J. R.; Nance, W. B.; and Bennett, A. D.: Elemental Analysis of Apollo 15 Surface Fines Used in Biological Studies at the Lunar Receiving Laboratory. Bioscience. vol. 22, 1972, pp. 96-99.

8-24. Weete, J. D.; and Walkinshaw, C. H.: Apollo 12 Lunar Material: Effects on Plant Pigments. Can. J. of Bot. vol. 50, 1972, pp. 101-104.

8-25. Weete, J. D.; Walkinshaw, C. H.; and Laseter, J. L.: Apollo 12 Lunar Material: Effects on Lipid Levels of Habituated Tobacco Tissue Cultures. Science. vol. 175, 1972, pp. 623-624.

# 9.0 SPACECRAFT MANUFACTURING AND TESTING

Complete systems, subsystems, and individual components for the Apollo spacecraft were furnished by numerous subcontractors. Subcontracts were generally managed by the prime contractors, although in a number of cases the government furnished hardware directly to the prime contractor. During the manufacturing process, subcontractors were required to observe the same rigor that was imposed by NASA upon the prime contractors with regard to the selection of materials, maintenance of dimensional tolerances, environmental control, and the demonstration of proper performance. The majority of subcontractors manufactured and assembled the contracted hardware in their own facilities; however, numerous organizations that specialized only in design and construction required the services of independent testing and certification organizations to perform the required test and checkout functions. In all cases, the subcontractors were responsible for the checkout of the hardware to be delivered to the prime contractors and the prime contractors were responsible for the end-to-end checkout of the spacecraft.

This section presents the sequences of operations that began with the assembly of spacecraft components to form the primary vehicle structures and terminated with final inspection before shipment. No attempt is made to establish the schedules or to describe the processes by which each separate component or assembly was produced. Each component or assembly was inspected and/or tested according to a rigorous set of quality and reliability requirements and determined to be flightworthy before installation. The described sequence is representative of operations for a typical flight spacecraft rather than for a specific vehicle. Modifications, mission requirements, schedule commitments, hardware availability, personnel, experience, facility loading, and other factors influenced the sequence of operations to an extent that required constant management. The individual vehicle time lines used to achieve the basic objectives of the manufacturing program are reflected in appendix E.

## 9.1 COMMAND AND SERVICE MODULE, LAUNCH ESCAPE SYSTEM AND SPACECRAFT/LUNAR MODULE ADAPTER

### 9.1.1 Command Module Assembly and Checkout

The command module was comprised of two major structural elements - the heat shield structure (outer) and the crew compartment structure (inner). The sequence of assembly of these two structures and systems installation and checkout operations are described in the following paragraphs.

9.1.1.1 Heat shield structure.- The heat shield structure consisted of brazed stainless steel honeycomb sandwich panels which were welded into three separate major assemblies: the forward compartment heat shield, the crew compartment heat shield and the aft heat shield. Figure 9-1 shows the assembly flow of the crew compartment heat shield. This is typical of all three heat shield assemblies.

The completed heat shield structural assemblies were delivered to a subcontractor for application of the ablative thermal protection material. The heat shields were returned from the subcontractor and installed on the command module during final assembly.

9.1.1.2 Crew compartment structure.- The crew compartment structure consisted of bonded aluminum honeycomb sandwich construction with the inner shell (facesheet) of the sandwich being a welded assembly to minimize cabin leakage. Figure 9-2 shows the assembly flow of the two major subassemblies of the inner shell. These subassemblies were welded together to complete the crew compartment pressure vessel assembly. The honeycomb core, the outer facesheets and splice plates were then fitted to this assembly and bonded in place. This completed the fabrication and assembly of the crew compartment primary structure and pressure vessel.

A second major bonding operation was performed to install the various ties and angles required on both the inside and outside for attachment of the secondary structural assemblies. The main display console, equipment support structures, cold plates, guidance and control system support structure, and interior equipment bays were installed. The crew compartment structure was then proof pressurized to demonstrate structural integrity. Throughout the assembly of the crew compartment structure, component locating, machining operations, fitting and trimming were controlled by master tools which assured proper assembly and fit of all components.

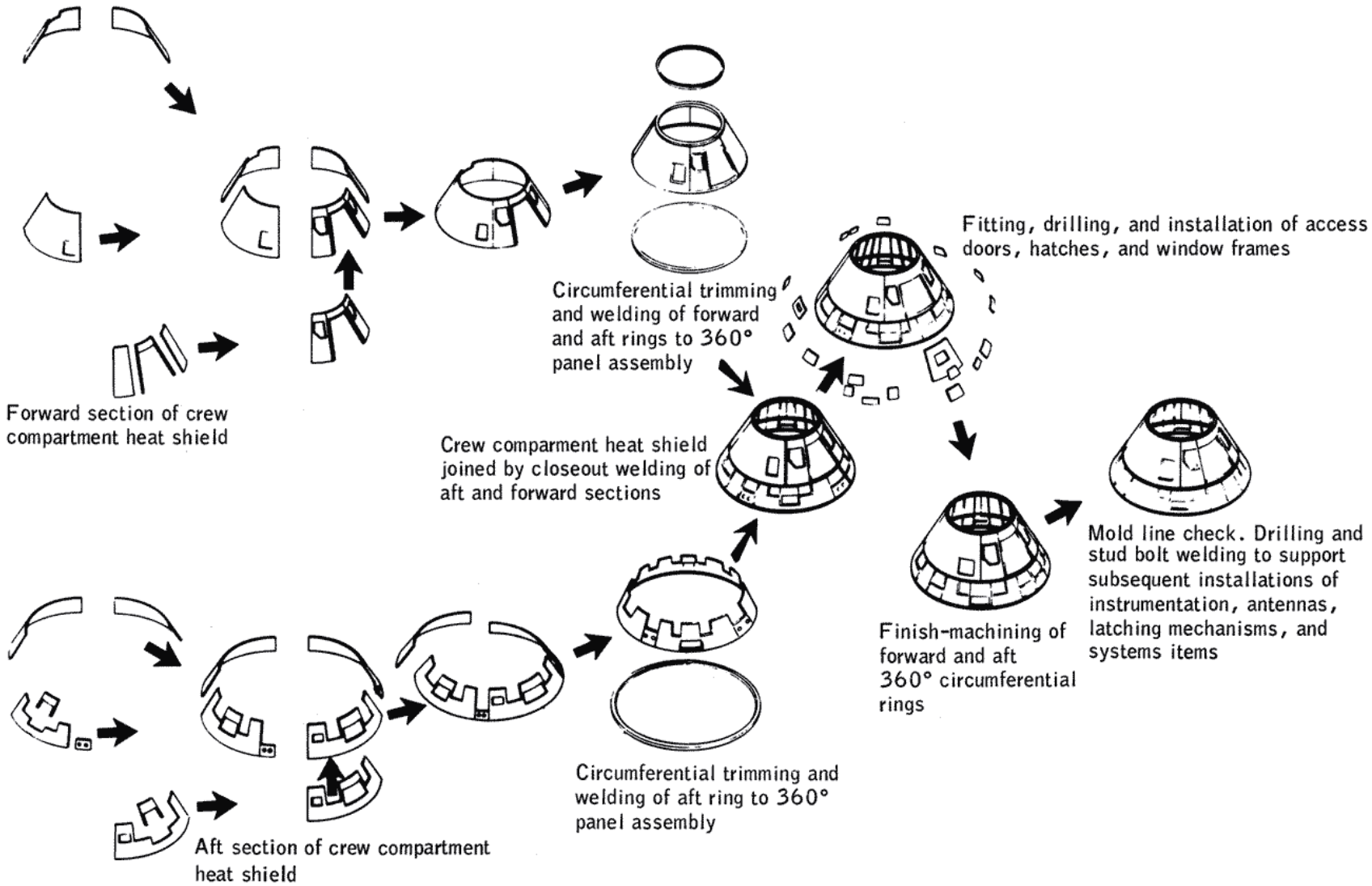


Figure 9-1.- Command module crew compartment heat shield assembly flow.

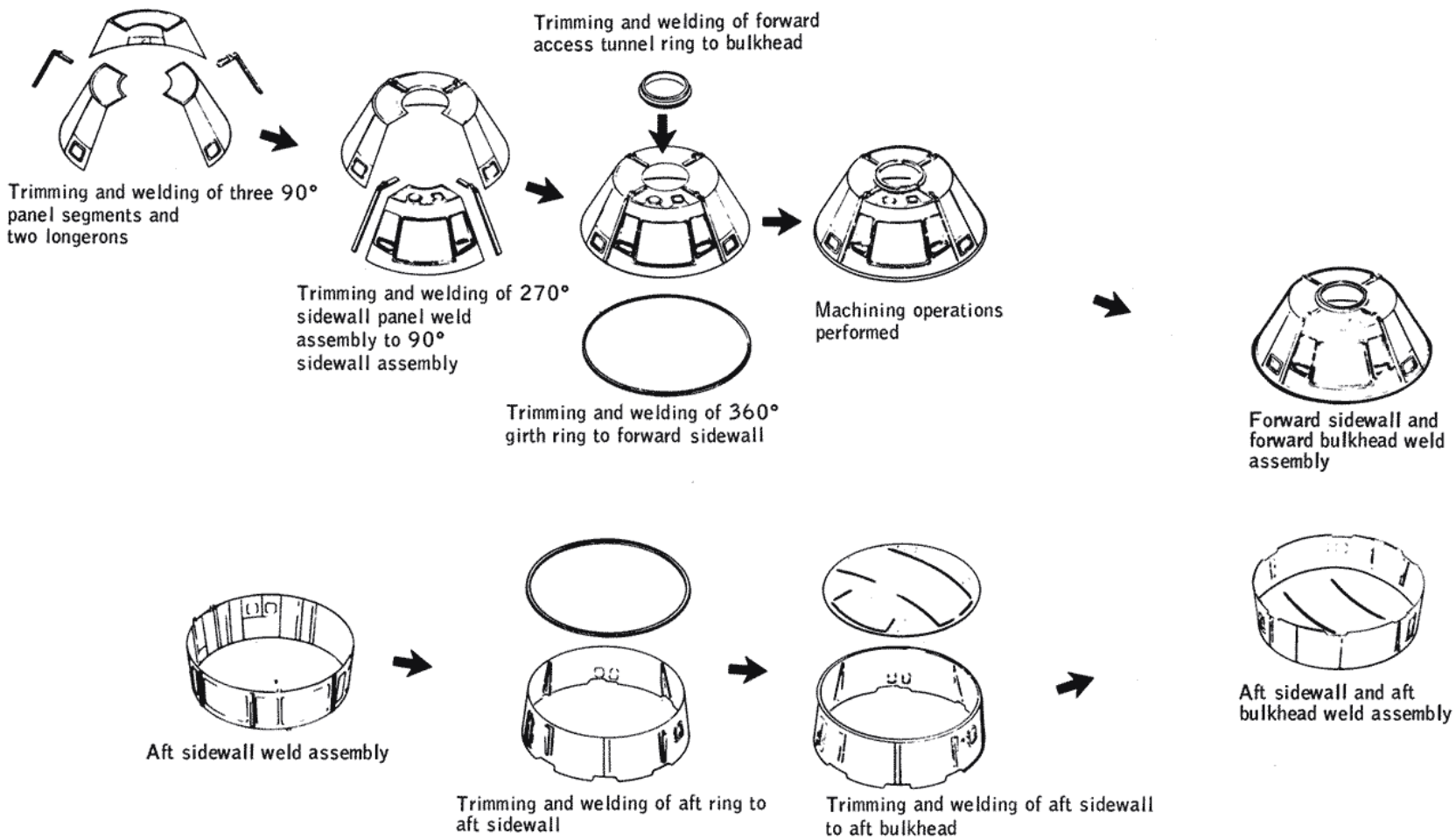


Figure 9-2.- Command module crew compartment structure inner shell assembly flow.

On completion of the structural assembly, the crew compartment was cleaned in a tumble-and-clean positioner and prepared for systems installation at an installation workstand. Systems were tested before installation in the spacecraft. All electrical systems, wire harnesses, and related wiring were then installed, and a high-potential test, a continuity test, and circuit analyzer tests were performed. Plumbing was installed, and flushed, purged and dried. The assembly was moved to pressure test cells where each fluids system was subjected to a complete performance and functional test series and verified if operational and within specified limits. This test series contained such operations as flow checks, leak tests, contingency and backup mode checks, regulator operation checks, proof checks, and instrumentation output checks. The assembly was then transferred back to the installation workstand for completion of systems installation.

When the electrical and fluids systems installations were complete, the crew compartment was connected to the service module and launch escape tower by cables (soft mate) for individual and combined systems tests. Throughout this period, each system was subjected to a series of carefully controlled functional tests that demonstrated proper operations. These tests established the performance data baseline to support all downstream test activities. The crew compartment was then placed in a workstand for installation of the heat shield, a fit check of the boost protective cover, installation of parachutes, a fit check of the crew couches, and final modifications, if necessary. This operation virtually completed the command module assembly.

9.1.1.3 Final operations.- In the final phase of command module manufacturing, the vehicle was cycled through another tumble-and-clean operation in which the vehicle was rotated through 360° in each axis to dislodge and remove debris. The weight and center of gravity were then determined, and the vehicle was subjected to an integrated test (sec. 9.1.5). The command module was subsequently moved to the shipping area and prepared for shipment. Such items as crew couches and crew equipment were removed, packed, and shipped separately.

### 9.1.2 Service Module Assembly and Checkout

In the service module manufacturing cycle, maximum use was made of jigs and fixtures to assure proper fit and clearance of all components and subassemblies and to provide good accessibility for removing, replacing, and interchanging components. A generalized flow through the manufacturing and assembly process is shown in figure 9-3.

Three major stands were used in the assembly flow. The primary structural assembly stand was used to assemble six radial beams to fore and aft bulkheads. To this structure were attached bonded-aluminum-honeycomb-structure equipment support shelves and other secondary structural attachment provisions for mounting of wire harnesses and tubing assemblies. In the next series of operations, the bonded-aluminum-honeycomb outer shell panels and reaction control system panels were prefitted and located, and the attaching holes drilled. Holes were then drilled for installation of tanks and other equipment.

The service module was then mounted to a support stand where command-to-service-module fairing panels and the aft heat shield were installed, and provisions were made for service propulsion engine installation. The weight and center of gravity were determined and axis markings were completed. The module was then cycled through the tumble-and-clean facility during which rotation through 360° in each axis was used to separate or dislodge any debris from manufacturing operations.

After being cleaned, the module was installed in a large workstand for systems installation. Components and systems installed included tubing, propellant storage and distribution systems, the cryogenic storage system, the service propulsion drain and vent system, the environmental control system, the helium pressurant system, the electrical power system, the main service module electrical harness, terminal boards, coaxial cables, and the lower engine bay structure. Low-pressure gross leak tests, flushing and cleaning of fluid lines, and automatic circuit analyzer checks were performed after installation but before electrical hookup.

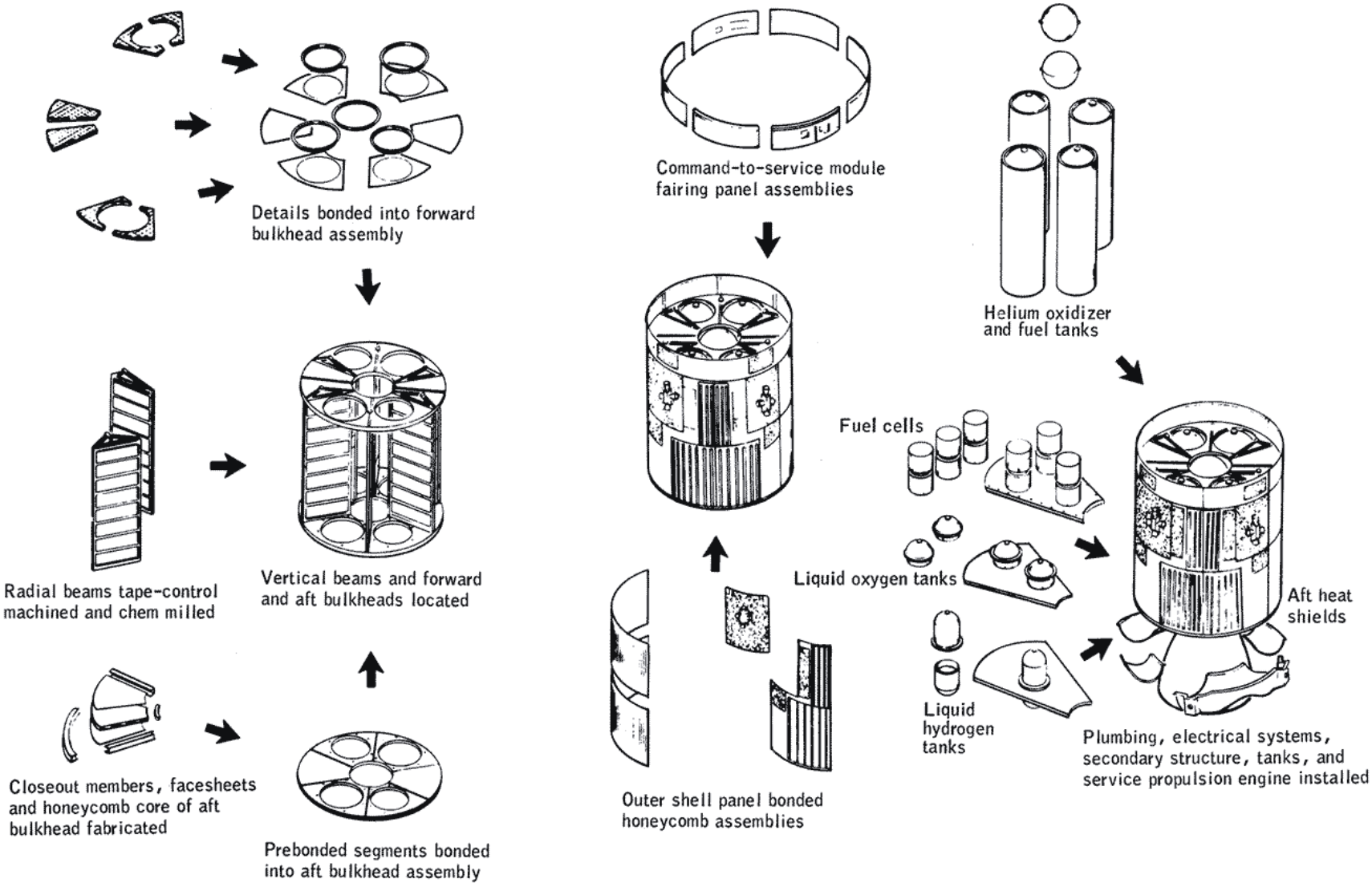


Figure 9-3.- Service module assembly flow.

The service module was then transferred to pressure test cells where each fluids system was subjected to a series of carefully controlled functional tests that demonstrated proper operation in the prime, backup, contingency, and redundant modes. Examples of operations performed to ensure vehicle integrity were proof tests, leak tests at joints (brazed and mechanical), overall systems leakage checks, flow checks, pressure regulator checks, relief valve functional checks, transducer verification, and cryogenic tests.

Following the tests, the vehicle was cycled through the tumble-and-clean positioner to dislodge and remove debris. The cleaned vehicle was then weighed and its center of gravity determined. On completion of these operations, the vehicle was placed in the integrated test stand for the integrated test series described in section 9.1.5. The integrated test completed the manufacturing, test, and checkout operations, and the vehicle was mounted on a shipping pallet and prepared for shipment.

### 9.1.3 Launch Escape System Assembly and Checkout

The launch escape system consisted of a nose cone, a canard system, launch escape and tower jettison motors, skirt and tower structures, and soft and hard boost protective covers. Subcontractors fabricated and assembled the nose cone, the launch escape motor, and the tower jettison motor. These units were installed as components at final assembly of the launch escape system. A generalized flow of components and subassemblies as they were manufactured is shown in figure 9-4.

9.1.3.1 Canard assembly.- The canard assembly consisted of rings, longerons, a bulkhead, outer skins, an actuating mechanism, and right- and left-hand doors. The structural sections were riveted and bolted together in a jig fixture. The actuating mechanism was installed, checked for proper functioning, and forwarded to final assembly.

9.1.3.2 Skirt structural assembly.- The skirt structural assembly consisted of longerons, circular ring segments, and skin segments that were fusion welded and then riveted together into an assembly. The assembly was finish-machined as a unit and then forwarded to final assembly.

9.1.3.3 Tower structural assembly.- The tower structural assembly was a fusion-welded titanium tubular structure with fittings at each end. The assembly steps are shown in figure 9-4.

9.1.3.4 Boost protective cover.- The boost protective cover consisted of two major assemblies. The forward assembly (hard cover) provided the structural attachment to the launch escape tower which was necessary to allow the cover to be jettisoned along with the launch escape system. This assembly covered about the forward one-third of the command module. This assembly was fabricated on a tool (form) and consisted of fiberglass facesheets and phenolic-honeycomb-core sandwich construction. A layer of cork thermal protection material was bonded to this and the assembly coated with a temperature resistant paint.

The aft assembly (soft cover) provided the thermal protection needed over the remaining two-thirds of the command module. It consisted of an inner layer of Teflon-coated fiberglass cloth to which was bonded the cork thermal protection material. The assembly was made in seven segments to facilitate shipment and final installation. A plaster-splash process was used to obtain the required fit between the soft cover and the command module. An exact duplication of the command module mold line resulted. A mold line simulator tool was then constructed and used to fit and assembly the soft cover. The operation was performed on each spacecraft because of variations of the command module exterior surfaces.

9.1.3.5 Final assembly.- The elements of the launch escape system were assembled, and a final mechanical fit check with the assigned command module was performed. The assembled unit was then used in support of downstream systems checkout activities.

### 9.1.4 Spacecraft/Lunar Module Adapter Assembly

The spacecraft/lunar module adapter consisted of a forward and an aft section. Each section consisted of four bonded-aluminum-honeycomb-construction subassemblies. Each subassembly was trimmed and assembled on a major assembly fixture in a pit in the floor which was 28 feet deep

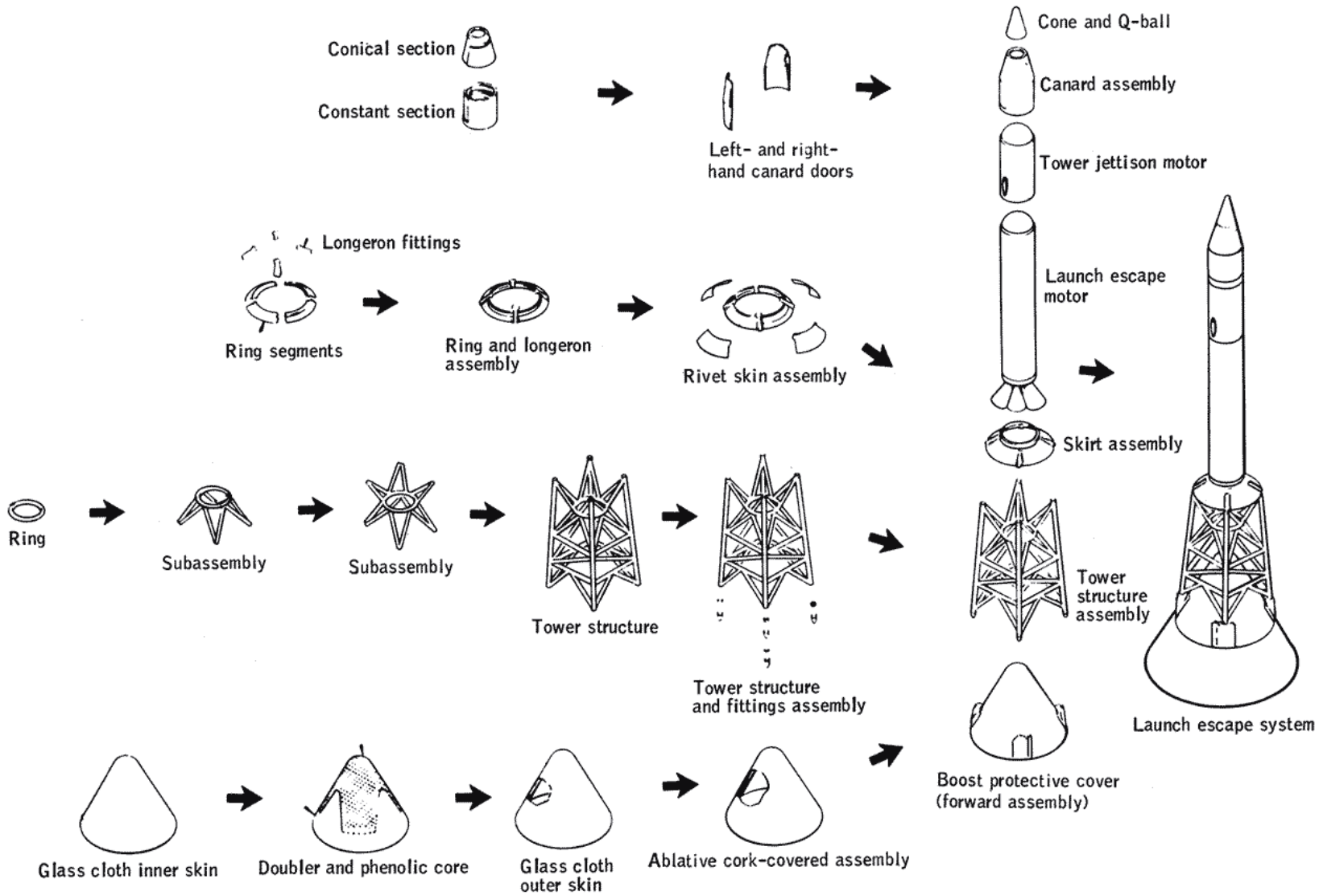


Figure 9-4.- Launch escape system assembly flow.

and 35 feet square (fig. 9-5). This fixture was unique because it was constructed below ground level. The honeycomb panels that made up the subassemblies were prefitted for bonding on assembly jigs, adhesive was applied, and curing was accomplished in one of the largest autoclaves in the United States (fig. 9-6).

Installations of secondary structure and equipment were performed after the assembly was removed from the pit and placed in an above-floor-level workstand. On completion of final assembly, the unit was fitted with a shipping cover and transported to the using site. The first three assemblies were transported by helicopter in approximately 300-mile legs (fig. 9-7). The remaining assemblies were transported by the Super Guppy, a specially modified aircraft.

### 9.1.5 Systems and Vehicle Checkout

9.1.5.1 Integrated systems checkout.- The integrated systems checkout verified the operation of the electrical, electronic, environmental control, and mechanical systems of the electrically and mechanically mated command and service module. Before power was applied to the spacecraft, a bus continuity check was performed to insure that the power distribution system was wired correctly and that there were no grounded (short-circuited) power circuits. The spacecraft power distribution system was then verified using external power sources and the data systems were checked so that the operational instrumentation systems could be used during systems checkout. Finally, the environmental control system was verified. After completion of the systems testing, the spacecraft was readied for integrated test.

9.1.5.2 Integrated test.- For integrated test, the command module, the service module, and the launch escape tower were electrically mated; electrical simulators were substituted for the spacecraft/lunar module adapter, the launch vehicle, and the spacecraft pyrotechnics; and an inertia simulator was substituted for the service propulsion system nozzle. Ground power was substituted for fuel cell power but batteries with power supply backup were used for the entry batteries.

The integrated test was originally performed in two phases: "plugs-in" testing was conducted with the ground checkout equipment connected and "plugs out" testing was conducted with the ground checkout equipment disconnected in an attempt to electrically isolate the spacecraft from the facility grounding system. Beginning with CSM-107 (the Apollo 11 spacecraft), the "plugs-out" phase was abandoned, basically for two reasons. A review of test records revealed that no problems could be identified as resulting specifically from the "plugs-out" configuration and that the vehicle could not, in fact, be electrically isolated.

The integrated test included the abort modes (pad, low-altitude and high-altitude aborts) and the normal mission profile. The normal mission simulation consisted of the following phases: launch profile, orbit insertion, earth orbit, translunar injection and coast, lunar orbit insertion, lunar orbit, transearth injection and coast, entry, and earth landing. The spacecraft systems were exercised as they were expected to be during the various mission phases.

### 9.1.6 Facilities

The command and service module and the launch escape tower were engineered, designed, assembled, and acceptance tested at the prime contractor facilities at Downey, California. Approximately 400 000 square feet of floor space was used for the Apollo activities. The contractor's facility at Tulsa, Oklahoma, was used to manufacture the spacecraft/lunar module adapter and most of the larger honeycomb subassemblies of the service module.

9.1.6.1 Bonding and test facility.- A 26 000-square-foot building housed the bonding and test facility. Operations performed in this building consisted of honeycomb preparation, metals processing, adhesive preparation, and inspection operations (including ultrasonic). The building contained a temperature- and humidity-controlled room for the adhesive preparation, provisions for overhead handling, complete metal processing facilities, areas for refrigerated storage, mixing equipment, and cutting and spreading tables. Two autoclaves were available for curing the bonded assemblies. One autoclave was especially designed to accommodate the size and shape of the command module. The second autoclave, a standard cylindrical type, was used for smaller panels and subassemblies.

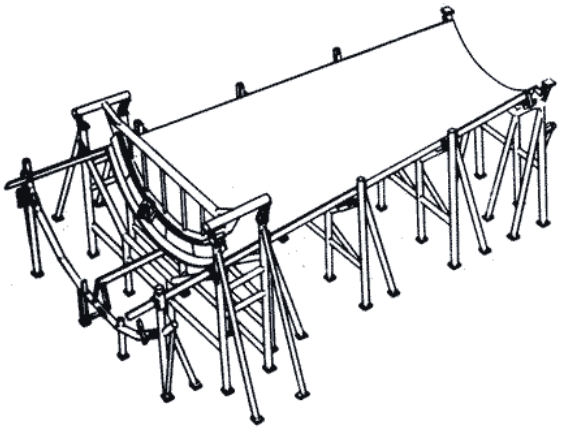

Trimming of the 90° segments prior to assembly

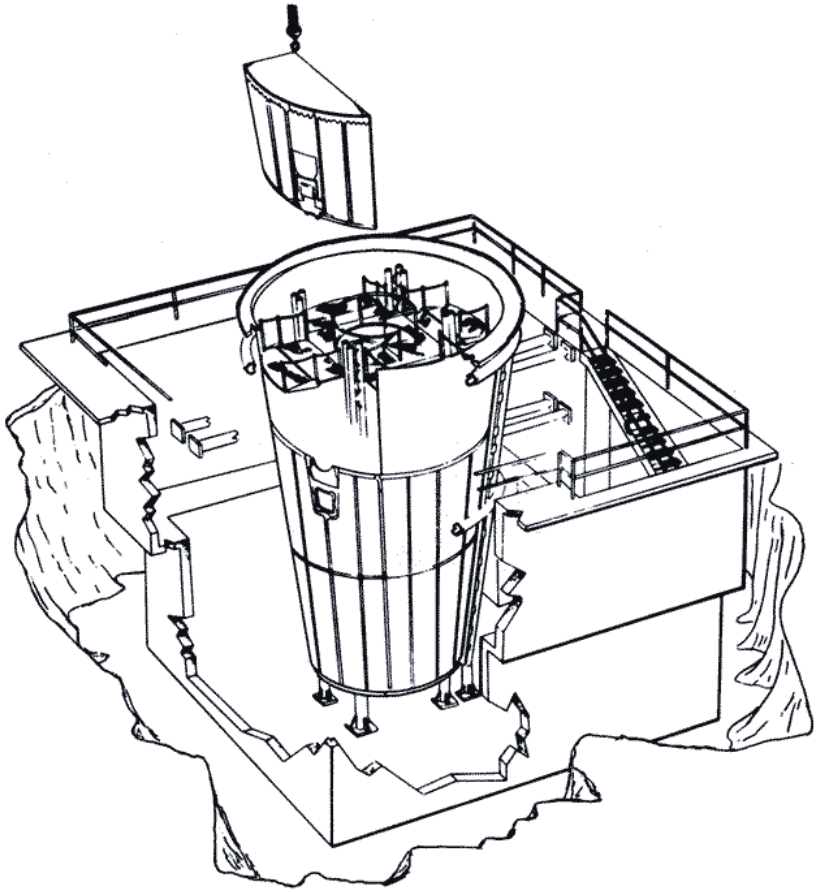

Major assembly fixture and assembly installation

Figure 9-5.- Spacecraft/lunar module adapter mating and assembly.

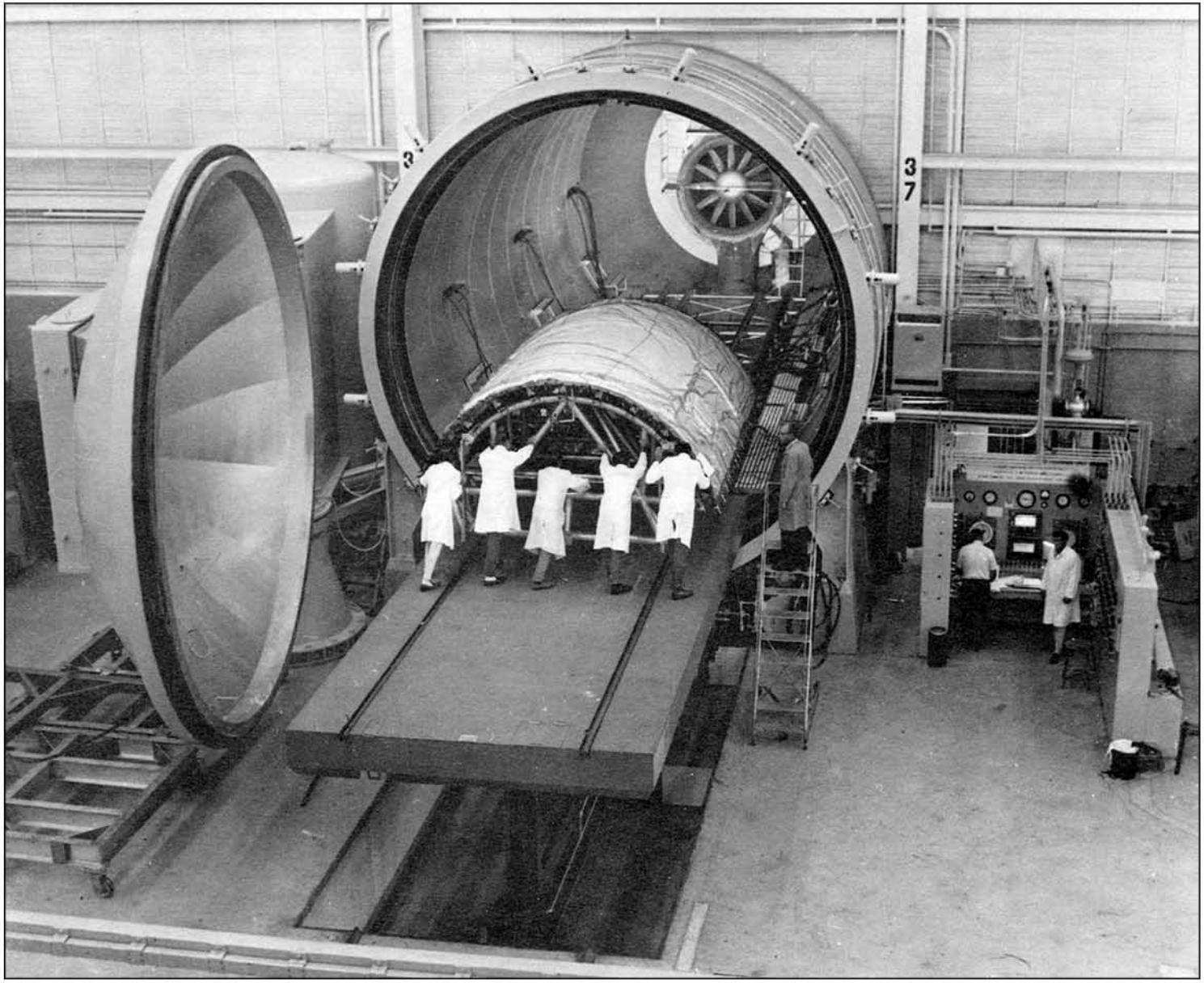


Figure 9-6.- Autoclave at Tulsa facility.

Figure 9-7.- Helicopter transportation of spacecraft/lunar module adapter.

9.1.6.2 Structure fabrication area.- Fabrication of the command and service modules, spacecraft/lunar module adapters, and launch escape towers was performed in approximately 85 000 square feet of high-bay manufacturing area.

Automatic alternating-current and direct-current fusion-welding was used to weld the command module segments. Mechanical equipment was used for trimming and cutting inner and outer panels and holding track-mounted skate heads for all circumferential and longitudinal welding operations.

Protective covers were provided for all spacecraft parts and assemblies to prevent damage to fragile skins, and a special high-lift crane fixture supported tank prefitting and installation operations for the service module.

Manual fusion-welding equipment was used in launch escape tower fabrication operations. Bridge cranes, slings, pickup dollies, and special racks facilitated the handling and transporting of subassemblies and assemblies.

9.1.6.3 Electronic and electromechanical equipment fabrication and checkout area.- An area of approximately 60 000 square feet was provided for the fabrication of electronic and electromechanical equipment. This equipment included deliverable airborne modules, ground support equipment, and systems measuring devices. Operations performed in the production area consisted of wire and sleeving preparation, wire harness and cable assembly fabrication, wiring continuity verification, potting and encapsulation, electronic subassembly fabrication, electronic installation and final assembly, and module and console functional tests.

Standard wire preparation equipment included wire cutters, wire stampers, thermal wire strippers, and small processing ovens. All soldering was performed in an environmentally controlled area that met NASA specifications. This area was air-conditioned; had dust-resistant floors, walls, and ceilings; had 75-foot-candle general illumination and high-level lighting at production work stations; and was equipped with shoe cleaners.

9.1.6.4 Tube fabrication and cleaning facility.- A facility of approximately 12 000 square feet was used for tube fabrication and cleaning. The tube fabrication equipment consisted mainly of cut-off saws, deburring and flaring equipment, and tube bending equipment. Cleaning facilities were provided for the precleaning and final cleaning of stainless steel tubing and for the precleaning, plating, and final cleaning of aluminum tubing. The final cleaning area was environmentally controlled.

9.1.6.5 Pressure testing facilities.- All pressure-testing operations that could not be performed in the final assembly and checkout facility (because of the hazards involved) were performed in special test cells. Hazardous systems and command module tests were performed in a pressure test cell that provided gas pressures and environmental control. Hazardous pressure tests on the service module were performed in an environmentally controlled pit-type test cell that was 25 feet deep, 25 feet long, and 23 feet wide.

9.1.6.6 Systems integration and checkout facility.- An area of approximately 133 000 square feet was provided for spacecraft systems integration and checkout. The interior of the building consisted of four general sections. The sections nearest the east and west walls were of two-story construction to accommodate offices, assembly and maintenance areas, crib control rooms, servicing equipment rooms, and other general supporting areas. The center of the building consisted of a low-bay and a high-bay section. The ceiling of the low-bay section was 42 feet high, and the section had two 10-ton bridge cranes that traveled the full length of the building. This section was used for spacecraft installation, modification, and preparation operations. The ceiling of the high-bay area was 63 feet high, and the section had two 15-ton bridge cranes that also traveled the full length of the building. This area was used for individual systems checkout and integrated systems checkout after module mating.

The primary purpose of this facility was to provide an area in which temperature, humidity, and dust were controlled during installation and checkout operations to assure maximum reliability of the spacecraft integrated systems. Functions performed in this facility included final assembly of systems and subsystems, installation of these components in the spacecraft, individual systems checkout of the command and service module, combined systems checkout of the command and service module, test instrumentation installation, modification and updating to the latest design configuration, integrated test and shipping preparation.

### 9.1.7 Equipment

The items of manufacturing and test fixtures and equipment used to support the assembly and checkout of the Apollo command and service module were numerous. Some of the more important items are described and listed in table 9-I to provide a generalized concept of overall operations.

9.1.7.1 Automatic circuit analyzer.- The large amount of wiring on the spacecraft required that an automatic circuit analysis test program be instituted for validating interconnecting wiring systems. Time for validating wiring systems was reduced by one-fourth, thus decreasing the overall flow time of the vehicle in manufacturing. Test results were displayed and all anomalies recorded to expedite error location, failure analysis, and the required corrective action. The following were typical tests.

a. Continuity of wiring

b. Noncontinuity of unused pins and connectors

c. Short-circuit detection

d. Leakage detection

e. Insulation resistance

f. Electrical connection bonding resistance

9.1.7.2 Acceptance checkout equipment for spacecraft.- The acceptance checkout equipment was a computerized system that provided centralized, programmed control and monitoring of spacecraft checkout operations. The automatic checkout system, coupled with interface equipment, a digital test command system, and a digital test monitor system, provided manual, semiautomatic, and automatic modes of operation to accommodate system testing, integrated testing, and launch support.

The testing of spacecraft systems was controlled from modules located in system consoles. The modules facilitated the input of the appropriate command selections, computer subroutine selections, or spacecraft guidance computer information to the spacecraft.

Each system console had a variety of test-command capabilities that were necessary for the testing and checkout of a particular system. A console could operate independently simultaneously with other system consoles. The up-link computer interpreted and reacted to the commands initiated from the system console. The signals generated by the acceptance checkout equipment ground station were transmitted by hardlines to the digital test command system. Redundant transmission checks and verification tests were accomplished to ensure maximum confidence in proper command transmissions.

Test data to be down-linked were obtained from sensors in the spacecraft and from the ground support equipment. These data were signal-conditioned in the digital test monitor system and transmitted as serial pulse-code-modulated data to the recording and display equipment that received, recorded, and displayed the spacecraft performance data, as required by the specific test being conducted.

The down-link computer performed the required processing functions such as predetermined limit checks, engineering unit conversions, and data compression. The data were converted to signals displayed as alphanumeric characters on the appropriate system consoles. Displays included unique outputs based on special requirements, the status of automatic test sequences, and the status of specific parameters. Blinking displays indicated that parameter limits were being exceeded.

TABLE 9-I.- COMMAND AND SERVICE MODULE MANUFACTURING FIXTURES AND EQUIPMENT

| Fixture/equipment | Purpose |
|---|---|
| Bonding autoclaves: | Bonding operations. |
| Cylindrical (12 x 20 ft) | |
| Clamshell (15-ft diam.) | |
| Weld fixtures: | |
| Circumferential skate-type tool | Trim and weld inner shell and ring assembly (crew compartment) to inner aft bulkhead. |
| Headstock and tailstock positioner | Position, support and rotate crew compartment horizontally during final assembly. |
| Ferris wheel inner sidewall assembly tool | Assemble, trim and weld inner sidewall components. |
| Ogive bulkhead tool | Trim and weld bulkhead segments. |
| Forward inner structure assembly tool | Trim and weld forward inner structure subassembly. |
| Tumble-and-clean fixture | Dislodge and remove debris resulting from manufacturing operations. |
| Weight and balance fixture | Determine dry weight and center of of gravity of command module and service module. |

## 9.2 LUNAR MODULE

### 9.2.1 Ascent Stage Assembly and Checkout

The ascent stage structure consisted of four subassemblies: the front face, the cabin skin, the midsection, and the aft equipment bay. Fabrication of these four subassemblies was accomplished in fixtures; on completion, the subassemblies were placed in an ascent structure main fixture for final assembly and mating operations. The structural assembly was then subjected to a cabin proof and leak test. Optical alignment of the navigation base and secondary structure installation were completed in an ascent structure workstand. The completed structural assembly was then installed in an environmentally controlled ascent stage general fixture for installation of electrical equipment, fluids systems, the reaction control system, the environmental control system module, and other equipment, as shown in figure 9-8.

The ascent stage was then moved to a cold-flow facility for the initial fluids test and checkout operations. Each fluids system was subjected to a set of carefully controlled functional tests that demonstrated proper operation. Testing was conducted to proof the system; test for leaks at joints (both brazed and mechanical); check overall systems leakage, flow rates, pressure regulators, and relief valve functions; and verify orifice configuration to assure proper fluid ratios of oxidizer and fuel for the propulsion system.

From the cold-flow facility, the ascent stage was processed through a rotate-and-clean operation. The cleaned stage was then transferred to an integrated general fixture where the electronic equipment was installed, thermal insulation and thermal shielding were prefitted, the ascent engine was installed, and the primary guidance and navigation system was installed and aligned.

Final test and checkout of the systems (integrated systems tests) were accomplished after the ascent and descent stages had been mated. An entire complex of ground support equipment was interfaced with the assembled stages and, with a carefully controlled set of operational checkout procedures, each system was subjected to controlled stimuli. The responses of the vehicle subsystems were recorded for comparison to the pass/fail criteria required for acceptance. Discrepancies, if found were recorded; troubleshooting was performed to isolate the anomalous condition; corrective action was provided; and retests were conducted to demonstrate satisfactory resolution.

The ascent stage was moved back to the cold-flow facility for final fluids systems test. The ascent stage propulsion and reaction control systems were subjected to procedural tests which demonstrated that the fluid flows, pressures, and functional paths conformed to specifications and could support mission requirements as complete systems. Final verification of the coolant-loop servicing and functional capability was also performed at this time. The ascent stage was then moved back to the integrated general fixture and mated to the descent stage in preparation for the formal engineering acceptance test described in section 9.2.3. On completion of the test, the ascent stage was transferred to a weighing fixture. The stage was weighed, the center of gravity located, and a final inspection made to confirm readiness for shipment. After removal of some of the more fragile equipment such as antennas, which were shipped separately, the ascent stage was packaged for shipment.

### 9.2.2 Descent Stage Assembly and Checkout

The descent stage structure consisted of machined parts and panel stiffener assemblies that were mechanically joined. The engine compartment was assembled, the tank compartments formed, the upper and lower deck assemblies added, and the machined interstage fittings attached to complete the structural assembly. This assemblage was accomplished in a descent structure main fixture. The stage was then moved to a descent structure workstand where the fluids equipment and wiring was installed. Gross leak checks and harness verification tests were subsequently performed within an environmentally controlled fixture as shown in figure 9-9. Following the equipment installation operations, the stage was moved to the cold-flow facility for testing similar to that described for the ascent stage.

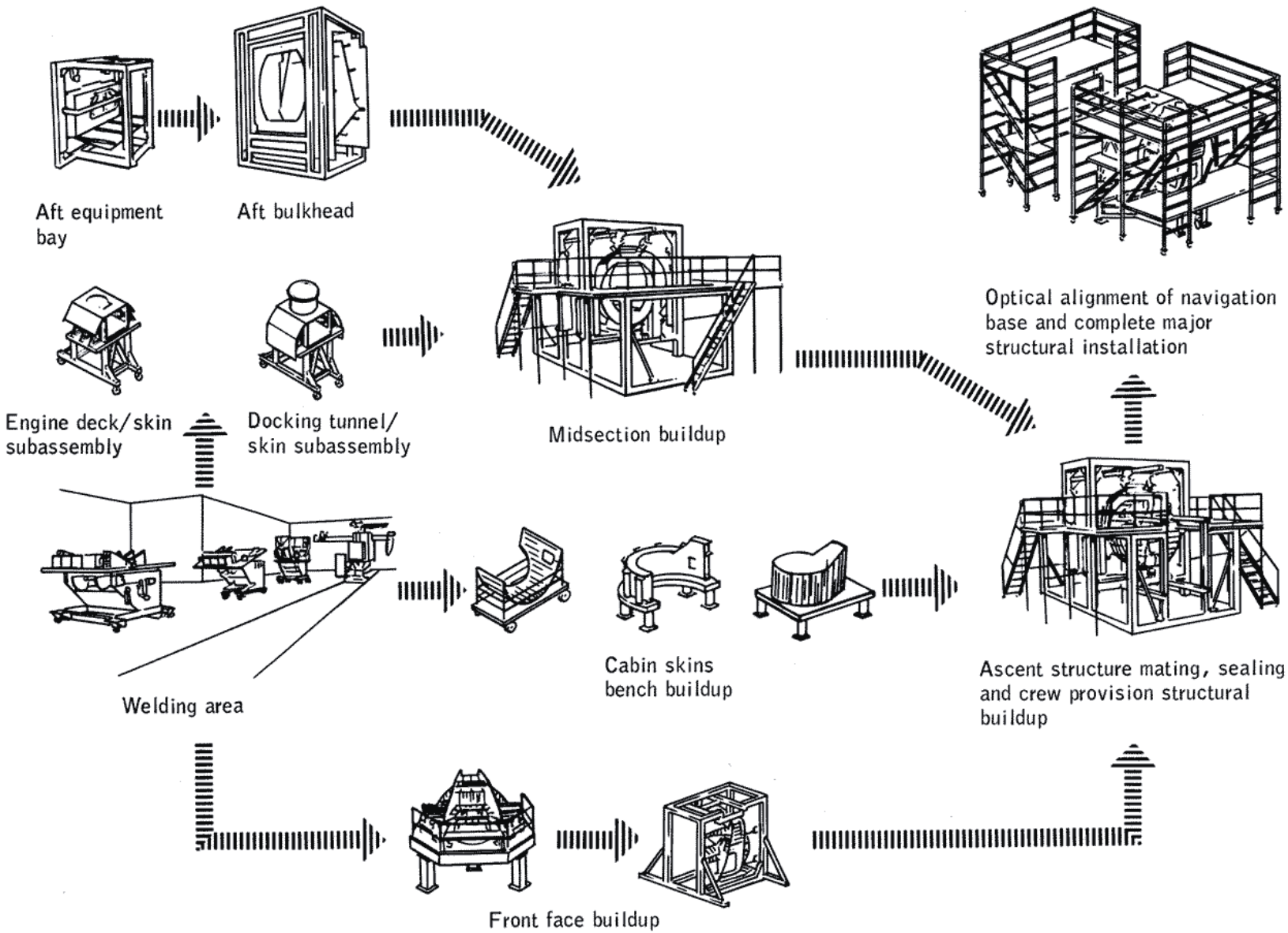


Figure 9-8.- Ascent stage assembly and checkout.

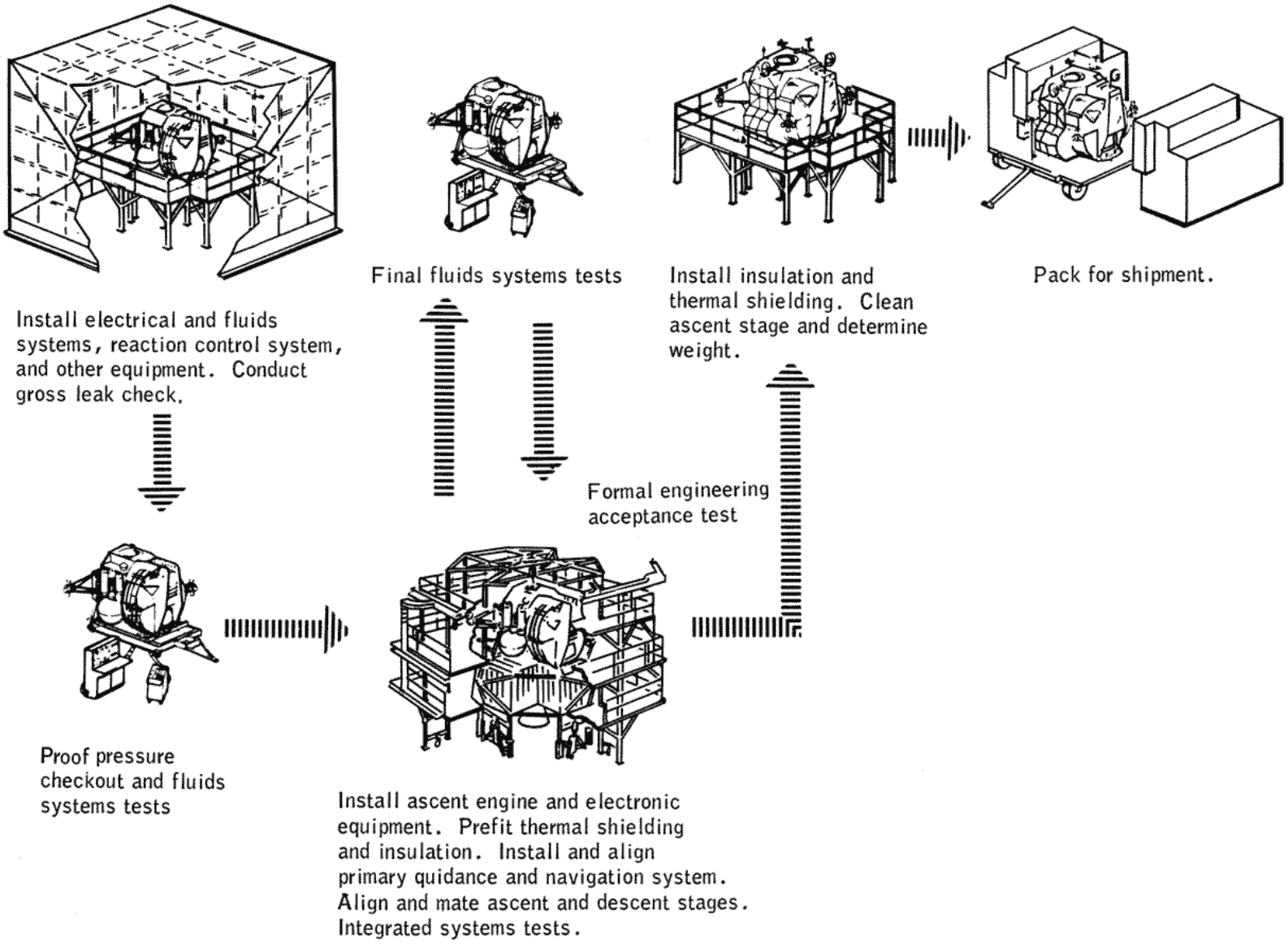


Figure 9-8.- Ascent stage assembly and checkout - Concluded.

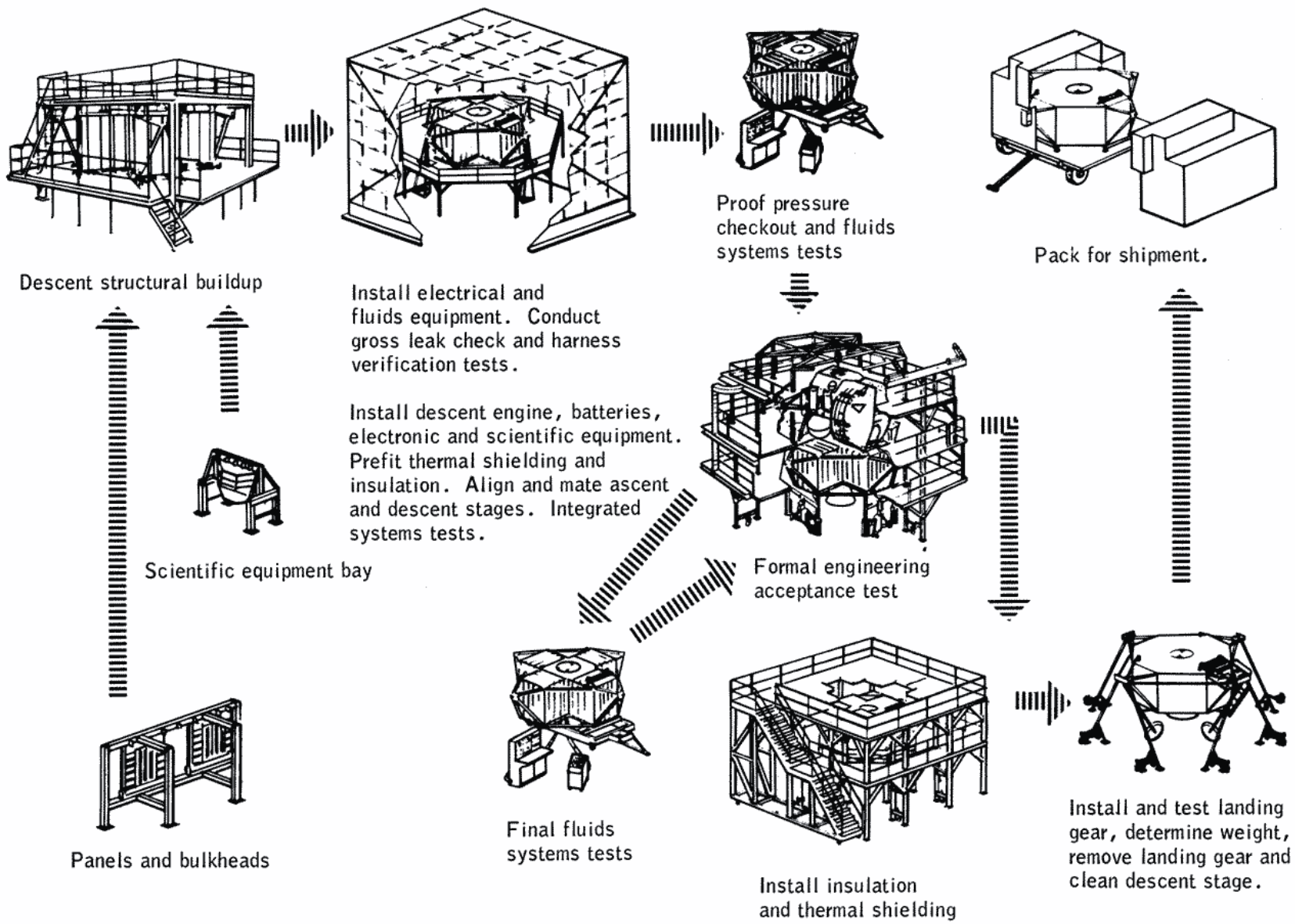


Figure 9-9.- Descent stage assembly and checkout.

From the cold-flow facility, the descent stage was processed through the rotate-and-clean operation. The cleaned descent stage was then moved to the integrated general fixture for installation of electronic and scientific equipment, the descent engine, and for alignment and mating with the ascent stage in preparation for integrated systems tests. On completion of the tests, the descent stage was again moved to the cold-flow facility where final verification was made of the engine installation and the descent propulsion system. When these tests were completed, the descent stage was transferred back to the integrated general fixture and mated to the ascent stage in preparation for the formal engineering acceptance test (sec. 9.2.3). After the test was completed, the landing gear were attached and tested for functional operation, the stage was weighed, the center of gravity was determined, and the landing gear were removed. After a final inspection to confirm readiness for shipment, the descent stage was packed for shipment.

### 9.2.3 Formal Engineering Acceptance Test

The formal engineering acceptance test was designed to exercise all functional paths of the lunar module vehicle systems. Four ground support equipment/vehicle test configurations were used during the test to provide, as nearly as possible, flight stimuli and response conditions without compromising the vehicle hardware.

The first test configuration consisted of the integrated vehicle with simulated reaction control system thrusters, power supplies instead of batteries, and all the ground support equipment instrumentation associated with the automatic checkout equipment. This test verified the total lunar module systems electromagnetic compatibility performance in typical mission modes. The ascent and descent stages were electrically and mechanically mated for the descent abort and abort staging phases of the mission simulations. The ascent stage was electrically disconnected for the ascent stage simulations.

The second test configuration consisted of the ascent stage and special timing equipment attached to the ground support equipment connectors on the reaction control thruster solenoid circuits. This test was conducted after final wiring of the flight thrusters was completed, and proper timing of the thruster valves and proper primary-to-secondary coil identification were verified.

The third test configuration consisted of the mated descent and ascent stages supported in a fixture that provided motion in the pitch, roll, and yaw axes on command. The end-to-end polarity of the attitude control loop was verified by physically rotating the vehicle and verifying proper response of the rate gyros and the abort sensor gyro assemblies about the vehicle axes.

The fourth test configuration consisted of the mated stages connected to a very minimum of ground support equipment. The vehicle was equipped with flight-type batteries. Each functional phase of a manned lunar mission was performed with switch sequences programmed to duplicate prelaunch checkout, earth-orbit operations, translunar preparation, separation and lunar-orbit insertion, lunar descent and landing, lunar stay, pre-ascent checkout, primary guidance powered ascent, and a demonstration of the abort guidance system abort and rendezvous capability. The test was performed by radio up-link to the lunar module and monitored by radio down-link displays on consoles in an automatic checkout equipment station control room.

### 9.2.4 Facilities

The lunar module was engineered, designed, manufactured, and acceptance tested at the prime contractor's plant in Bethpage, Long Island, New York, before shipment to the Kennedy Space Center in Florida for launch preparations. The plant consisted of 21 major facilities with more than 5 million square feet of operating space. Since virtually all the prime contractor's manufacturing and testing tasks were to be performed within the Bethpage complex, the facilities selected for lunar module manufacturing and testing were located within a 1-mile radius, thus allowing for an efficient flow of parts, components, and subassemblies to a centralized final assembly and test area.

9.2.4.1 Ascent stage structural/mechanical manufacturing area.- An assembly area of approximately 20 000 square feet was allocated exclusively for the ascent stage structure and mechanical systems installation. An additional 200 000 square feet of facilities and equipment were made available for lunar module use on a time-sharing basis with other programs of the prime contractor. This area was selected because of the complete range of equipment and facilities available for manual or fusion welding, resistance welding, chemical milling, spin forming, honeycomb bonding, heat treating, inspection, shipping, and receiving.

9.2.4.2 Descent stage structural/mechanical manufacturing area.- An assembly area of approximately 15 000 square feet was allocated exclusively for the descent stage structure and subassembly elements. An additional 120 000 square feet of facilities and equipment were available on a time-sharing basis for the manufacture of lunar module detail parts. This area was selected because the descent stage structure, which consisted of machined aluminum beams, chemically milled skin panels, and sheet metal parts, was compatible with the manufacturing techniques used in this area in the production of virtually all sheet metal parts for other programs of the prime contractor.

9.2.4.3 Centralized lunar module assembly, installation, and final acceptance test area.- The overall lunar module support area and facilities required for the final assembly, installation, and test of the lunar module before shipment consisted of approximately 70 000 square feet of space for exclusive lunar module use and an additional 40 000 square feet of facilities and equipment made available on a time-sharing basis with other programs of the prime contractor. The final assembly area was capable of supporting three vehicles in integrated testing at one time besides individual work station areas for two descent stages and three ascent stages. The individual work station areas were used to prepare the vehicle for final acceptance tests and shipment.

9.2.4.4 High-pressure test facility (cold flow).- The high-pressure test facility had special features that permitted remote-controlled static and dynamic testing of high-pressure fluid operating systems. Acceptance and development tests were conducted on lunar module propulsion, environmental control, and reaction control systems. Two control rooms housed the operating consoles and data-acquisition instrumentation equipment. A room for electrical and mechanical support equipment was centrally located so that each test cell could be equipped with the necessary plumbing, wiring, and manifolding for supplying electrical, fluid, and gas requirements.

### 9.2.5 Equipment

Numerous items of manufacturing and test equipment were used to support the assembly and checkout of a lunar module. Some of the fixtures and equipment used during vehicle assembly and testing are listed in table 9-II.

### 9.2.6 Specialized Support Laboratories

Many specialized facilities were used to troubleshoot specific problems, check electronic packages, environmentally exercise components for acceptance, or otherwise indirectly support operations. The more important facilities and tasks performed are described.

9.2.6.1 Full-mission engineering simulator.- The lunar module full-mission engineering simulator was a manned simulation facility that provided a means of verifying the actual lunar module flight article capabilities, using an integrated system approach. The simulation profiles consisted of descent from lunar orbit to the surface, ascent to rendezvous, and docking with the command and service module. Simulation also verified the ability to perform various mission aborts. The dynamics of the vehicle were simulated with six degrees of rigid-body freedom using a combination of flight-type and commercial-type equipment.

9.2.6.2 Flight control integration laboratory.- The flight control integration laboratory was used for the integration and verification of the flight abort guidance and flight control systems hardware. The ability to operate and control the entire system in a realistic mission situation was verified before use on a flight vehicle. Preinstallation checkout and system troubleshooting of flight hardware were also performed in this laboratory.

TABLE 9-II.- LUNAR MODULE MANUFACTURING FIXTURES AND EQUIPMENT

| Fixture/equipment | Purpose |
|---|---|
| Ascent stage general fixture | Installation of electrical equipment, fluids systems, reaction control system, environmental control system module, and other equipment. |
| Descent structure workstand | Installation of electrical equipment and fluid systems. |
| Integrated general fixture | Installation of ascent and descent engines, electronics equipment, primary guidance and navigation system, antennas and other equipment. Alignment and mating of ascent and descent stages. Acceptance testing. |
| Rotate-and-clean fixture | Tumbling of either ascent or descent stages to remove debris from manufacturing operations. |
| Landing gear fixture | Temporary installation of landing gear for functional demonstration of system. |
| Weight-and-balance fixture | Determine dry weight and center of gravity of ascent stage or mated ascent and descent stages. |
| Automatic circuit analyzer | See sec. 9.1.7.1. |

9.2.6.3 Data reduction facility.- An automated data reduction facility, applicable to all spacecraft programs, was used to process telemetry data in automatic, semiautomatic, or manned control modes. Output devices included strip-chart recorders, oscillographs, event records, an X-Y plotter, a digital printer plotter, and card and tape punch equipment.

9.2.6.4 Primary guidance laboratory.- The primary guidance laboratory was used by associate contractors for preinstallation testing, troubleshooting, and acceptance testing of government-supplied hardware for the navigation system and electronic systems before installation in the vehicle. This unique laboratory was staffed by associate contractor personnel who also supplied the necessary ground support equipment to perform all test requirements.

Additional facilities for specialized support included a laboratory for the development of environmental control systems, a simulator for testing of life support systems, a hydrostatic test laboratory, a drop-test fixture, a thermal-vacuum facility, a facility for conducting heat transport and water management tests, and a laboratory for conducting component tests to verify environmental test requirements.

# 10.0 LAUNCH SITE FACILITIES, EQUIPMENT, AND PRELAUNCH OPERATIONS

## 10.1 WHITE SANDS MISSILE RANGE

The Apollo launch escape and earth landing systems were qualified at the White Sands Missile Range by a flight test program conducted from 1963 to 1965. The test program also accomplished significant certification testing of the command and service module structures, batteries, and certain flight instrumentation. Another important task was the first use, including fit and function tests, of the handling and checkout ground support equipment for the command and service module. All the property and equipment assets of the NASA White Sands Missile Range Flight Test Office were dispositioned within 60 days of the last Little Joe II flight test.

### 10.1.1 Launch Complex

All of the vehicles launched in the course of the flight test program at White Sands were launched from Complex 36. The major facilities are shown in figure 10-1.

As originally constructed, Launch Complex 36 consisted of a blockhouse, service tower, and launch pad designed for firing Redstone missiles. After completion of the Redstone program, the service tower and half of the blockhouse were assigned to the Apollo program for Little Joe II launch vehicle qualification and spacecraft abort tests. The other half of the blockhouse and the launch pad were assigned to another program.

Requirements to support the Little Joe II effort included a new launch pad, permanent tracks on which the service tower could be moved to the new launch pad area, a cable trench between the pad and the blockhouse, a facility transformer station, and a transfer and power room near the launch pad. The transfer and power room, known as the power building, contained junction boxes, regulated power supplies, and monitoring equipment. The service tower (fig. 10-2) required extensive modification to accept the Little Joe II/Apollo vehicle which was larger than the Redstone missile. The service tower was configured such that the spacecraft, when attached to the launch vehicle, was enclosed in a clean room for installation and checkout of components and instrumentation.

### 10.1.2 Vehicle Assembly Building

A vehicle assembly building (fig. 10-1) was constructed approximately 1 mile from the launch area. The building included a high bay area, electromechanical laboratories, storage facilities, and solid propellant rocket motor checkout areas. The little Joe II launch vehicles were unloaded at this building on arrival and, occasionally, the building was used to store an Algol rocket motor overnight. Later, a portable clean room was added in the building to permit final installation of the reaction control and hydraulic actuation systems under a controlled environment.

Permanent office space for operations personnel was not constructed because of the relatively short duration of the program. Instead, 15 mobile office trailers were provided for use during vehicle assembly and checkout activities. Trailers in the launch pad area were moved to a safe site just before initiation of the final systems checks before each launch and were returned after launch.

### 10.1.3 Little Joe II Control System Test Facility

The control system test facility was located at an isolated site (fig. 10-1) and contained all the equipment required to test and service the reaction control system and the hydraulic-powered aerodynamic control system. The facility included a concrete test pad and a prefabricated steel building that was environmentally controlled to a temperature of 70° ±5° F. The pad and building were separated by a distance of 45 feet for operator safety. The building was

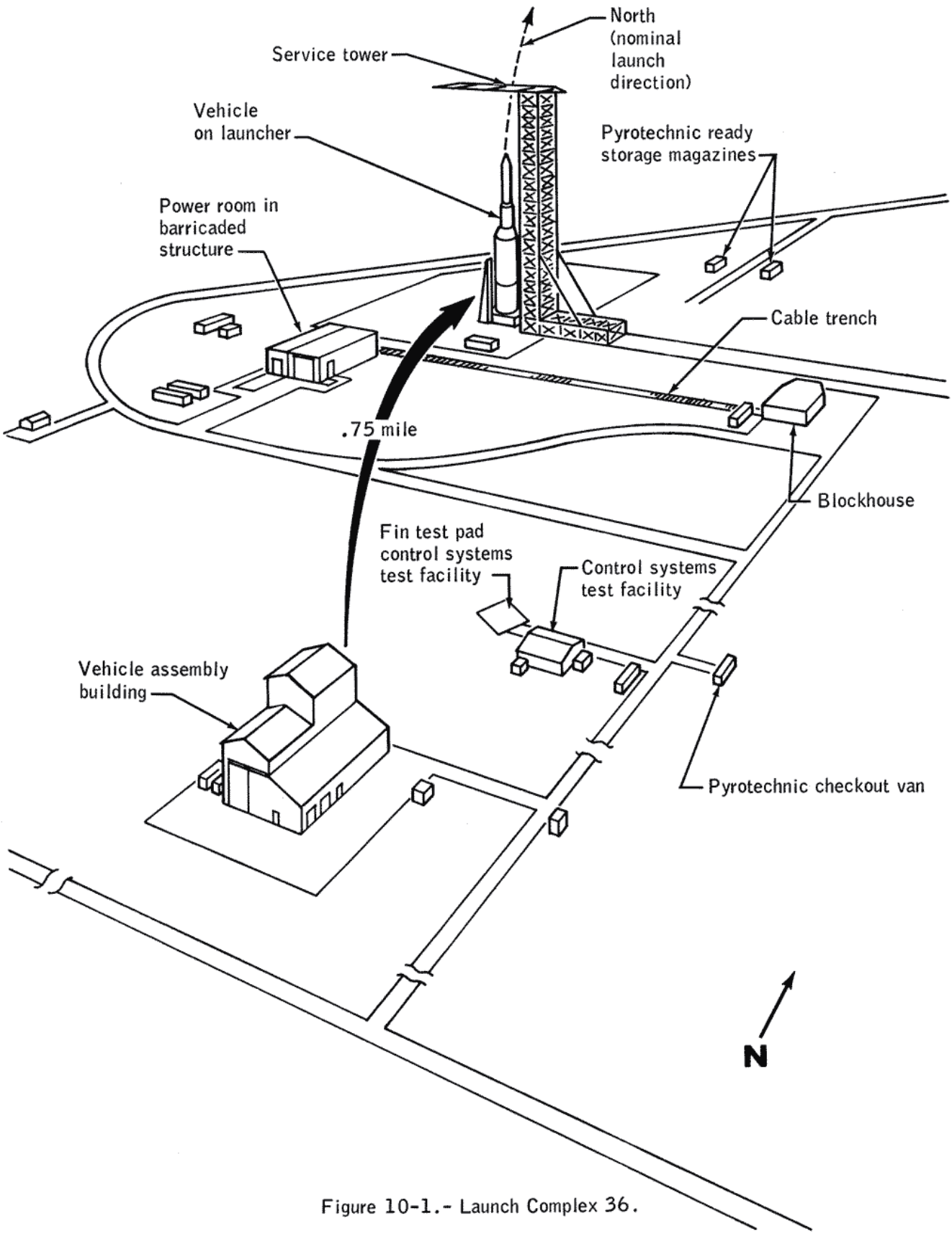


Figure 10-1.- Launch Complex 36.

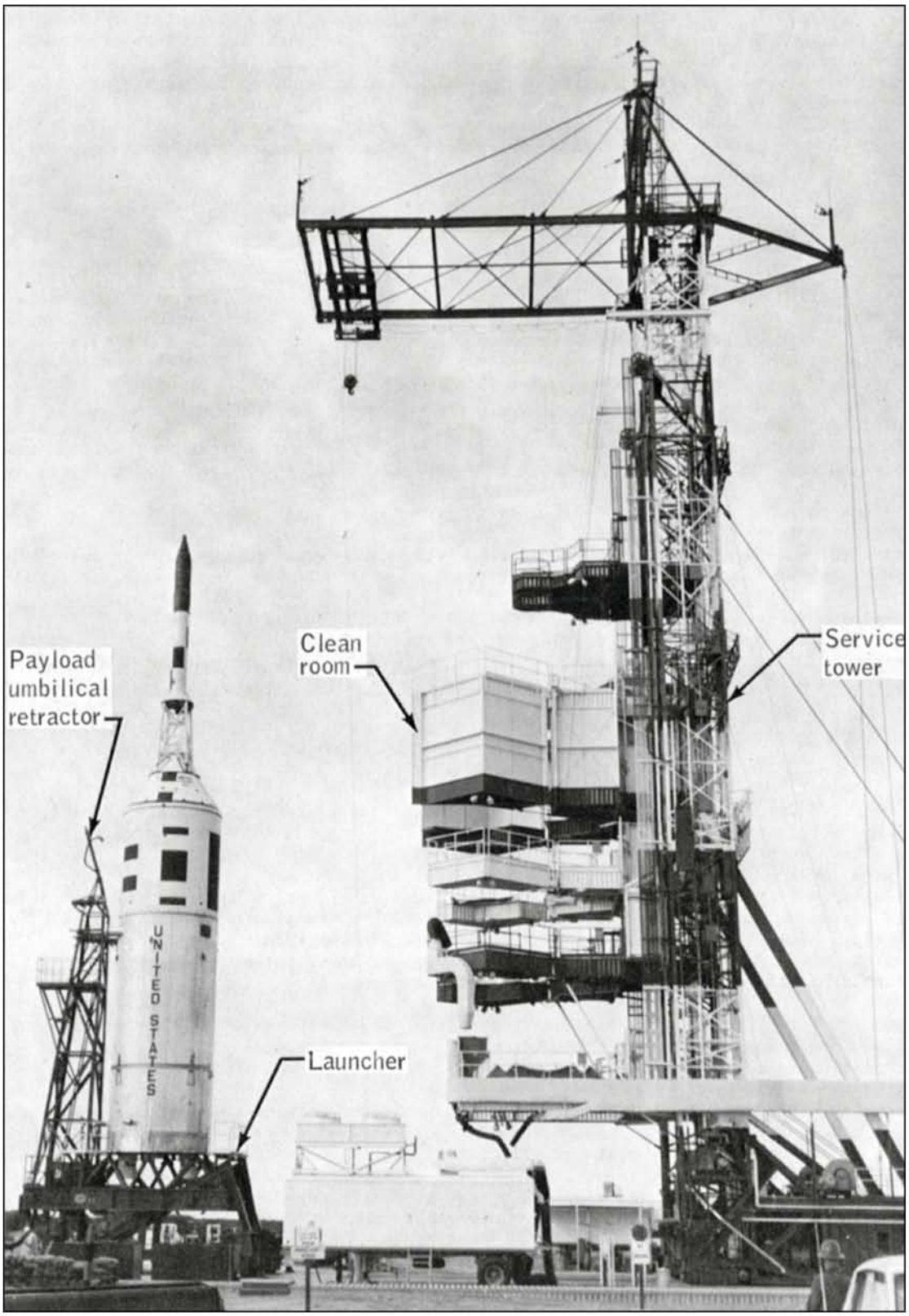


Figure 10-2.- Prelaunch operations at Launch Complex 36.

designed to withstand an overpressure of 42 pounds per square foot, equivalent to the simultaneous explosion of all four reaction control system tanks. The pad included floodlights for night operations, showers and water flushing for hydrogen peroxide safety, tiedowns for the fin stand, and electrical power outlets. The ground-support equipment used for fin servicing was placed on a paved area of the facility. A hydrogen peroxide servicing trailer could be placed inside the building for hydrogen peroxide surveillance. An attitude control fin test control was used to control and monitor fin testing, and portable recording equipment was used to monitor system performance.

### 10.1.4 Little Joe II Launcher

The launcher (fig. 10-2) was a mechanical structure used for the final assembly and launching of the Little Joe II/Apollo vehicles. Heavy steel I-beams formed the major structure so that a minimum amount of refurbishment was required between launches. The launcher mast, attached to the support platform, supported the payload umbilical retracting assembly and provided the base for two support arms that stabilized the vehicle during thrust buildup and lift-off. The launcher was swiveled on electric-motor-driven crane-type trucks for azimuth positioning. The support platform was pivoted by means of electric-motor-driven screw jacks for elevation positioning. The positioning controls and indicators were located in the blockhouse. In addition, a control panel in the blockhouse contained valve and pressure controls and indicators for the pneumatic systems which operated the vehicle support arms and the payload umbilical retracting assembly.

Changes made to the launcher during the program included (1) redesign of the payload umbilical system for the A-003 mission to accommodate repositioning of the umbilical on boilerplate spacecraft 22, and (2) incorporation of an extension on the mast for the A-004 mission because of the more forward location of the umbilical on spacecraft 002.

The launcher performed as designed for all five Little Joe II launches. All mechanisms performed smoothly before and after each launch, and refurbishment was held to a minimum. Actual launcher positioning was within 6 minutes of the desired angle in azimuth and 1.5 minutes of the desired angle in elevation.

### 10.1.5 Ground Support Equipment

10.1.5.1 Little Joe II.- The major ground support equipment items for the Little Joe II launch vehicles were consoles and equipment racks used for system control; air conditioning for maintaining motor grain temperature; reaction control system and attitude control system testing and servicing equipment; an environmental tent; handling equipment; and miscellaneous items generally used for test and checkout. There were 248 items of ground support equipment. Of this total, approximately 70 were commercial standard items purchased by NASA, and 50 were commercial standard items purchased by the contractor. The remaining items were manufactured specifically for the Little Joe II program. The launch vehicle manufacturer furnished slings and dollies for handling the vehicle airframes and all components except Algol rocket motors; the rocket motor subcontractor furnished all handling equipment for these motors.

Vehicle systems varied from mission to mission; therefore, continuous surveillance of ground support equipment was conducted. Every effort was made to use available equipment. In general, the ground support equipment performed well.

10.1.5.2 Command and service module.- The command and service module contractor furnished handling, checkout and servicing ground support equipment. The handling equipment (45 units) consisted of support stands, workstands, lifting slings and beams, weight and balance equipment, and transport dollies. The checkout equipment (22 units) included the launch escape and earth landing systems checkout and test equipment, test conductor consoles in the launch control center, and miscellaneous smaller articles for operations such as battery checkout and wire harness continuity checks. Servicing equipment (9 units) included a battery charger, test pressure units, and related equipment. In addition, the contractor furnished miscellaneous auxiliary equipment (28 units) such as tool kits and shipping covers.

## 10.2 EASTERN TEST RANGE/KENNEDY SPACE CENTER

### 10.2.1 Saturn IB Launch and Checkout Facilities

AS-101 and AS-102 were missions in which Apollo boilerplate spacecraft were launched from the U.S. Air Force Eastern Test Range in support of spacecraft development objectives. The facility requirements for these launches were minimal in that the Saturn IB development was already well underway and Launch Complex 37 (fig. 10-3) had been in use for a considerable length of time prior to the AS-100 series of flights. Pre-mate checkout of boilerplate spacecraft 13 and 15 was accomplished in Air Force hangar AF, which was also used for the launch vehicle S-IV stage pre-mate checkout. Spacecraft ground support equipment was provided to check the sequential, pyrotechnic, telecommunications, and environmental control systems. Flight development instrumentation was provided as government furnished equipment and existing FM/FM ground stations at hangars S and D were available for telecommunications reception.

During the period following the boilerplate flights, new facilities were constructed and activated for the AS-200 series of unmanned flights to qualify all spacecraft and launch vehicle systems for manned flights. Initial concepts required specific facilities for individual checkout of the various spacecraft systems. Checkout included static firing of the reaction control and main propulsion systems, with an eventual mating of modules and a final test in altitude chambers prior to stacking on the launch vehicle. Figure 10-4 is an artist's conception of the industrial area facilities. The following facilities were constructed: a solid-propellant storage facility, a pyrotechnics and parachute installation building, two cryogenic test buildings, two hypergolic test buildings consisting of two test cells each, a fluid test support laboratories building, an environmental control system test building consisting of two test cells, an ordnance test facility, an operations and checkout building equipped with two altitude chambers and numerous integrated test stands, and a parachute packing building. Also provided were warehouses, repair and maintenance facilities, office space, and a flight crew training building which housed various simulators and trainers for the flight crew. Living quarters and medical and recreational facilities were provided for the flight crews in the operations and checkout building. Sites and the basic industrial needs (e.g., water and power) were planned for a main propulsion static firing facility; however, final construction of the complex was not accomplished. Instead, Air Force Launch Complex 16, an obsolete Titan I launch pad, was equipped to provide static firing and hypergolic ground support equipment maintenance capability at a considerable program cost savings. A surplus water tank was used for environmental protection for the service modules and ground support equipment during hydrostatic testing of replaced service propulsion system tanks and for a static firing of the Apollo 7 service propulsion system before launch.

### 10.2.2 Saturn V Launch and Checkout Facilities

A procedure in which the space vehicle was assembled and checked out at the launch pad was entirely satisfactory for the Saturn IB flights. However, the size and complexity of the Saturn V vehicle and the scheduled frequency of flights dictated the use of a new mobile launch concept wherein the vehicle was assembled and checked out in a protected environment, and the flight-ready vehicle was transported to the launch site for final servicing and propellant loading. Launch Complex 39 (fig. 10-3) was constructed to carry out the mobile launch concept. The complex was located approximately 5 miles north of the Kennedy Space Center industrial area.

10.2.2.1 Vehicle assembly building.- The Apollo/Saturn V space vehicles were assembled in the vehicle assembly building (fig. 10-5). The building contains a high bay area 525 feet high and a low bay area 210 feet high. With a length of 716 feet and a width of 518 feet, the building has 343 500 square feet of floor space. By volume, it is one of the largest buildings in existence, containing 129 482 000 cubic feet of space.

A cutaway view of the interior of the vehicle assembly buidling, as configured for the Apollo program, is shown in figure 10-6. The high and low bay areas, serviced by a transfer aisle for movement of vehicle stages, formed two distinct operational elements of the building. The high bay area contained four separate bays for the assembly and checkout of the Saturn V stages, instrument unit, and Apollo spacecraft. Access to the space vehicle was provided by work platforms in each high bay. Each platform was constructed in two parts. The parts could

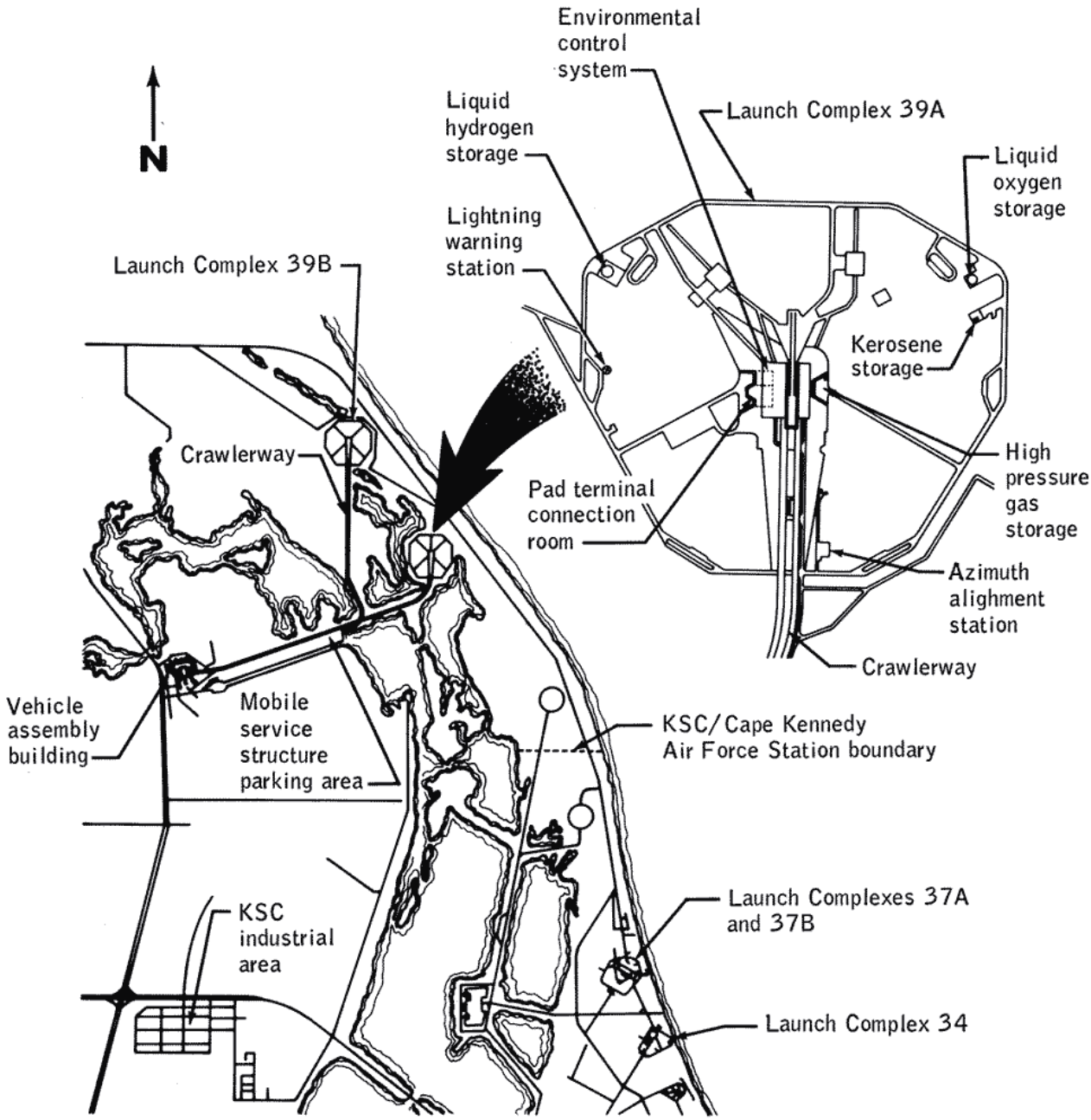


Figure 10-3.- Kennedy Space Center/Cape Kennedy Air Force Station facilities.

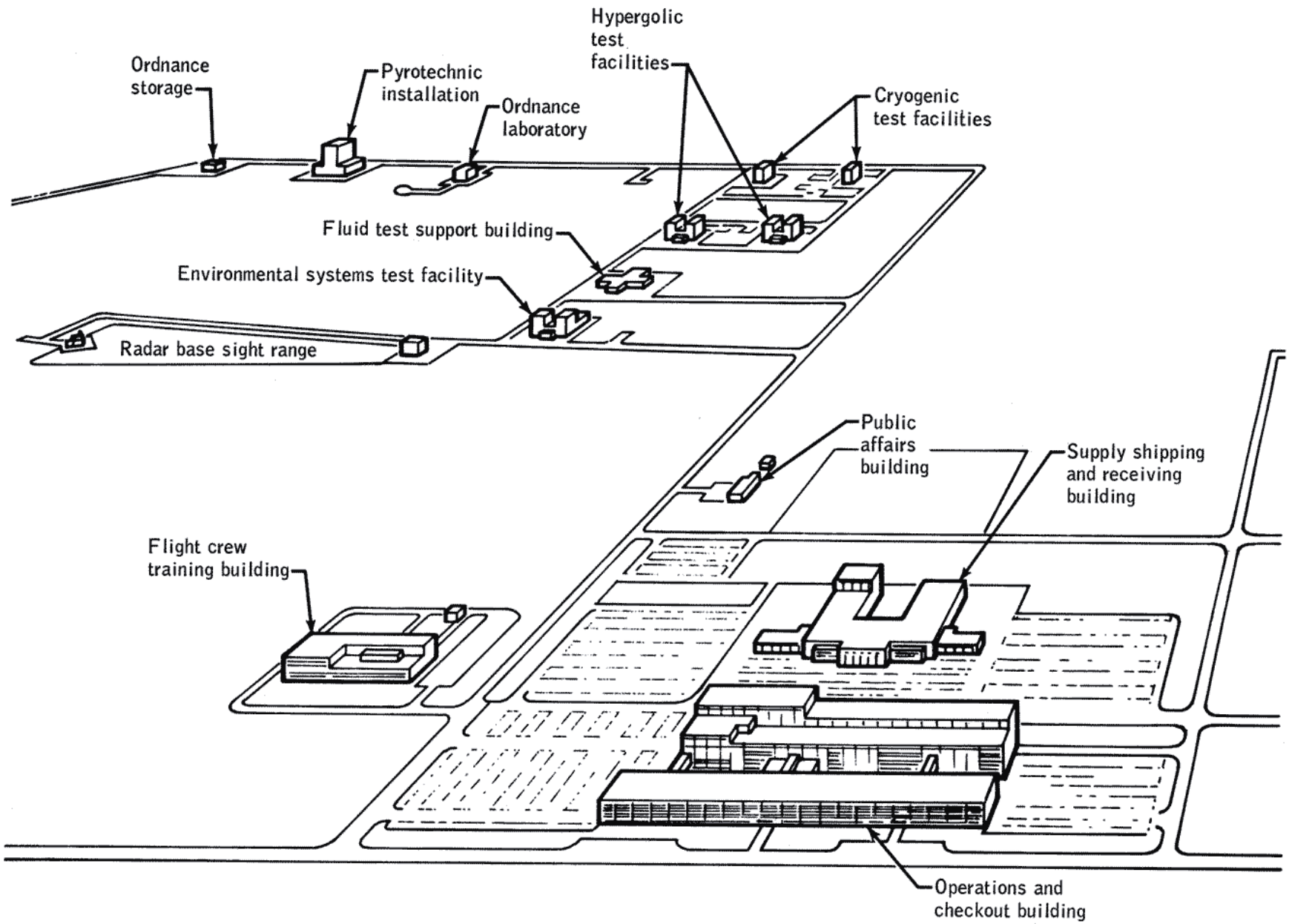


Figure 10-4.- Artist's concept of Kennedy Space Center industrial facilities.

Figure 10-5.- Vehicle assembly building.

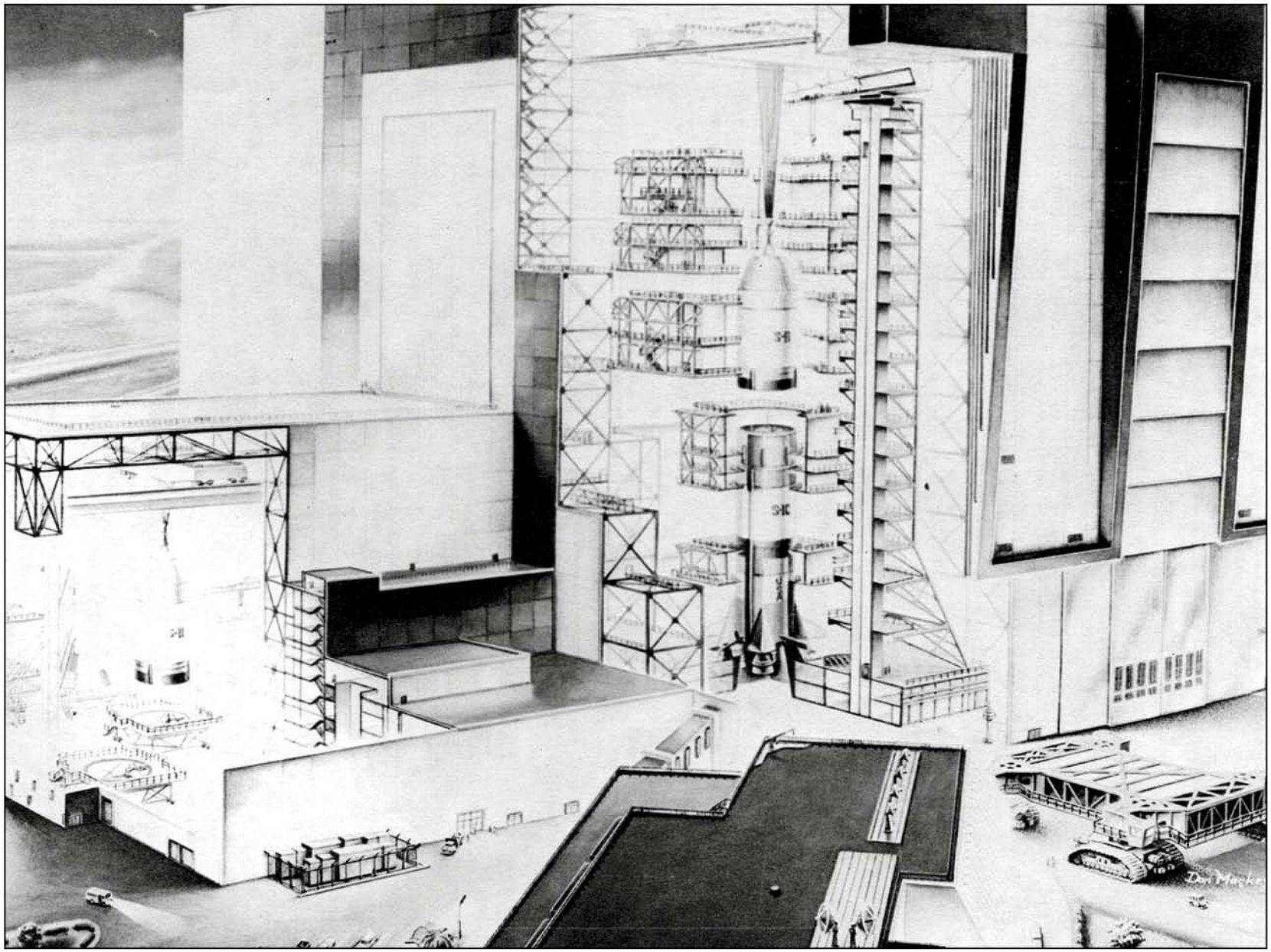

Figure 10-6.- Cutaway of vehicle assembly building.

be moved together and mated, affording 360° access to the vehicle. The low bay area, approximately 442 feet by 274 feet, contained eight stage preparation and checkout cells as well as quarters for flight crews and support personnel who were required to remain nearby during critical periods of assembly and checkout. Additional areas were used for office space and storage.

Control rooms for automatic spacecraft checkout operations were located in the operations and checkout building, with stimuli and response signals carried by hardline to the vehicle assembly building and launch pads.

10.2.2.2 Mobile launchers.- Each space vehicle undergoing assembly inside the vehicle assembly building was supported by a mobile launcher (fig. 10-7). The 18 000-square-foot base of the launcher later served as the launch platform. The base contained holddown arms and masts for servicing the first stage of the vehicle. The base also housed computer systems, digitally controlled equipment for propellant and pneumatic lines, and electrical power and water systems. A 45-foot square opening was built into the base for rocket exhaust at lift-off.

Permanently positioned on the base of the mobile launcher was a 380-foot-high launch umbilical tower that provided support for nine swing arms for direct access to the vehicle. The tower also contained 17 work platforms and distribution equipment for propellant, pneumatic, electrical and instrumentation systems. Two high-speed elevators afforded access to the work platforms. Mounted on top of the tower was a 25-ton-capacity crane. The height of the combined base and umbilical tower was 445 feet.

10.2.2.3 Launch sites.- Two launch pads were constructed at Launch Complex 39. The facilities that comprised pad A are shown in figure 10-8. The mobile launcher, with the flight-ready space vehicle mounted on it, was secured to six mounting mechanisms located on the concrete surface of the pad. Other fixed components to service and effect launch of the space vehicle included liquid oxygen and hydrogen service towers, a fuel system service tower, and an electrical power pedestal.

A steel-reinforced concrete enclosure, covered with as much as 20 feet of earth fill, housed electronic equipment which was part of the communications link between the mobile launcher and the launch control center. Similar enclosures housed a terminal connection room, an environmental control systems room, a high pressure gas storage room and an emergency egress room. Located near the perimeter of the pads were kerosene, liquid oxygen, and liquid hydrogen storage facilities, and a remote air intake facility. Holding ponds for retention of fuel spill and waste water and a burn pond for disposal of hydrogen gas boiloff were also located within the launch site area.

A flame trench partially bisected each pad. Prior to launch a 700-ton wedge-shaped flame deflector, was moved by rail into the flame trench and positioned directly beneath the space vehicle so that it would deflect the flames and channel the exhaust along the flame trench. To dissipate flames and minimize damage to the pad, a water deluge system was available which could pump 40 000 gallons of water a minute into the flame trench.

10.2.2.4 Mobile service structure.- The mobile service structure (fig. 10-9) was a steel trussed tower that was positioned adjacent to the space vehicle on the launch pad to provide access for connecting certain ordnance items, performing checkout functions, servicing spacecraft systems, and fueling the spacecraft. The structure had five work platforms which closed around the space vehicle. Two platforms were self-powered for positioning at the desired levels; the remaining three could be repositioned but were not self-powered. Two elevators provided access to the work platforms. Located in the base portion of the structure were a mechanical equipment room, an operations support room, and areas for equipment storage. The structure weighed 10 500 000 pounds and was 410 feet in height.

10.2.2.5 Transporter.- Two transporter units were manufactured to move the mobile launchers and the mobile service structures. First, a transporter moved a mobile launcher into the vehicle assembly building. On completion of vehicle assembly, a transporter was again used to move the mobile launcher and vehicle (a load of more than 11 million pounds) approximately 3 1/2 miles over a specially constructed crawlerway to one of the launch sites (fig. 10-7). During the trip, the load was maintained within 10 minutes of arc from vertical, even while the transporter

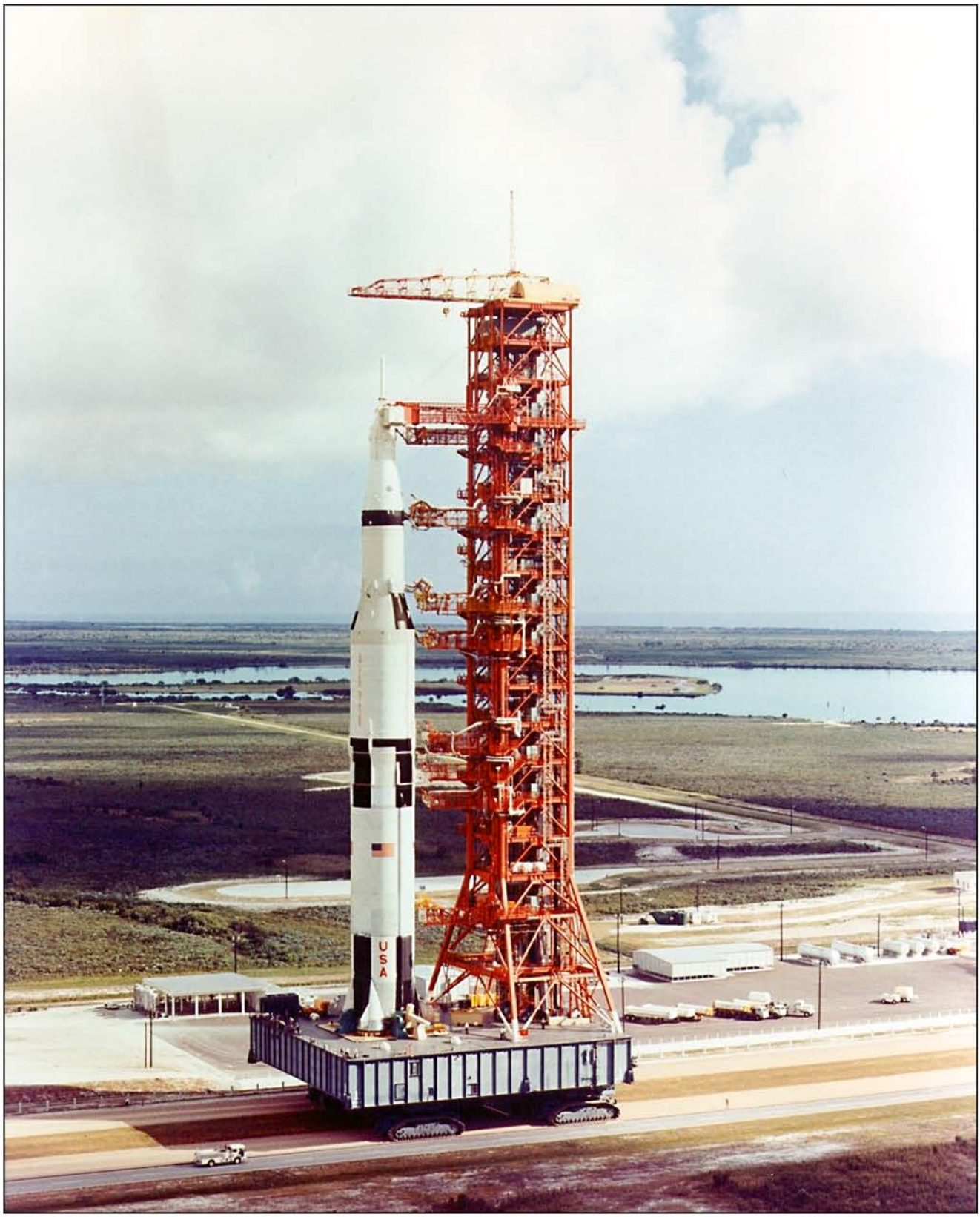


Figure 10-7.- Mobile launcher and space vehicle being transported to launch pad.

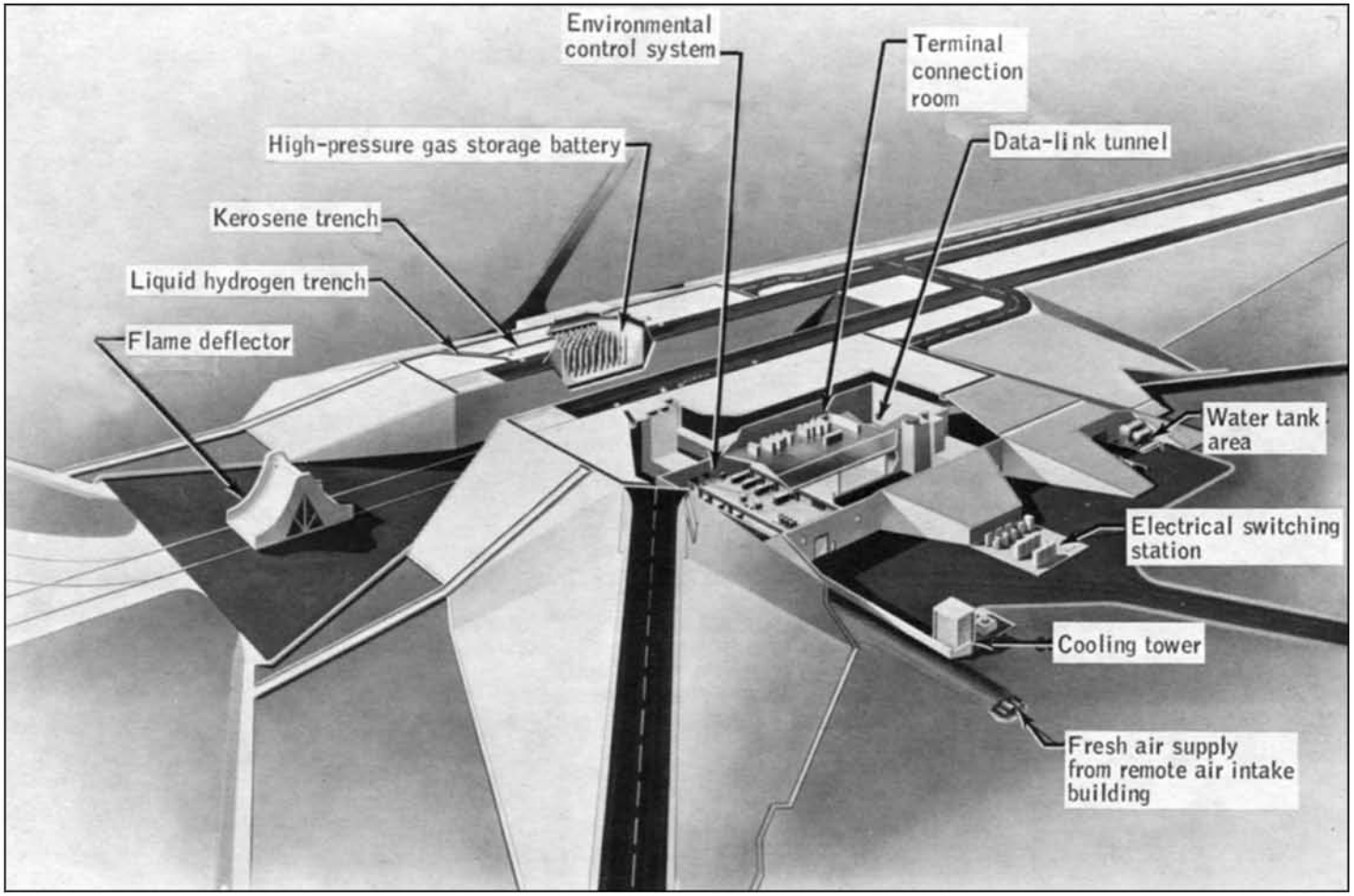


**Figure 10-8.- Cutaway view of Pad A, Launch Complex 39.**

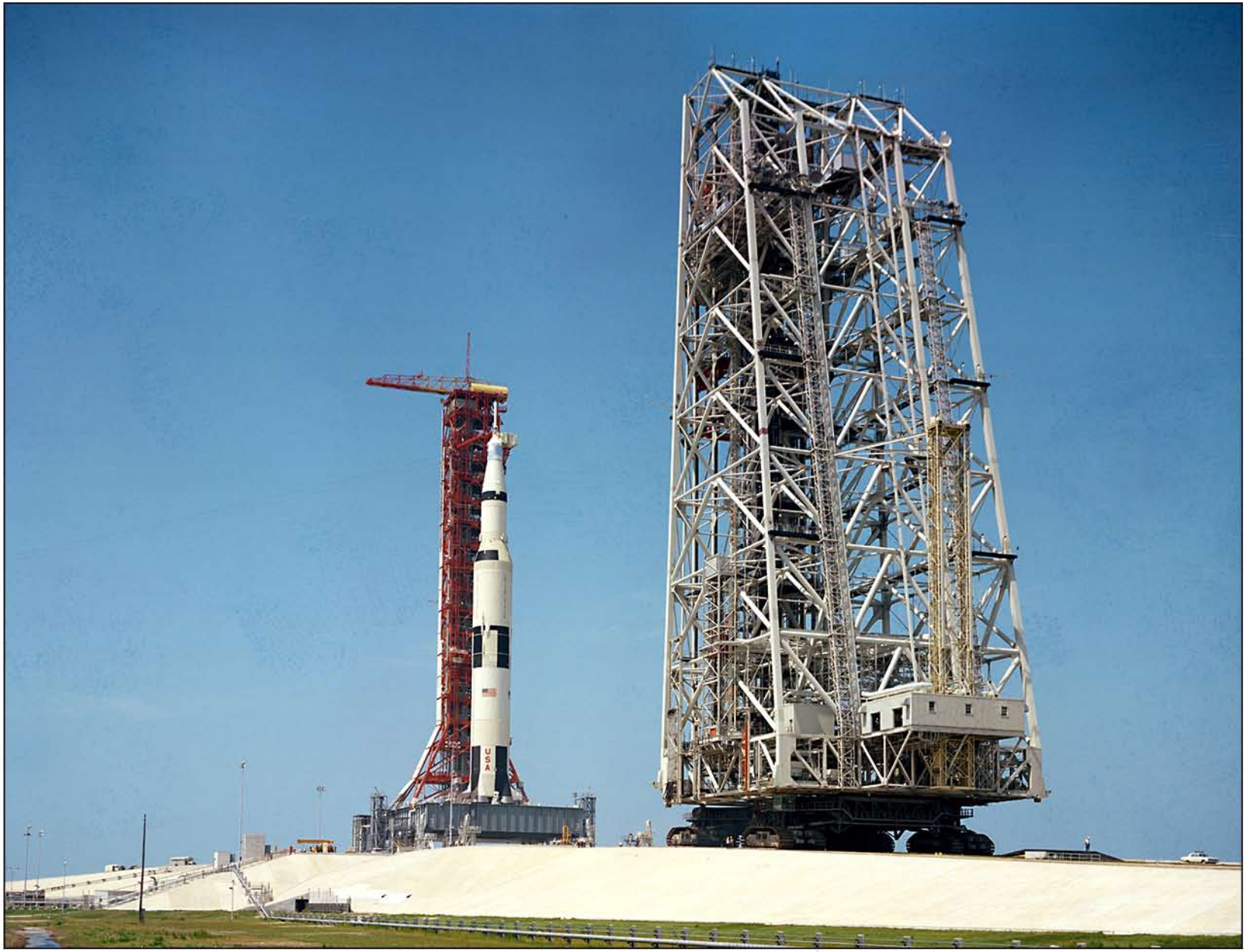


Figure 10-9.- Mobile launcher and mobile service structure being positioned on launch pad.

climbed a 5 percent grade to the launch pad. In order to accomplish this, the transporter was equipped with both automatic and manual leveling devices. After depositing the mobile launcher and space vehicle on the pad, the transporter moved the mobile service structure from its parking area to the launch pad. Finally, the transporter returned the service structure to the parking area before launch.

The transporter was 131 feet long, 114 feet wide, and weighed 6 million pounds. It had a load capacity of 12 million pounds and, when loaded, had a maximum speed of 1 mile per hour. The vehicle moved on four double-tracked crawlers, each 10 feet high and 40 feet long. Each shoe on a crawler track weighed approximately 2000 pounds.

Motive power was provided by two 1750-horsepower deisel engines that drove four 1000-kilowatt generators. The generators, in turn, powered 16 traction motors. Power for steering, ventilation and electrical systems was provided by two 1065-horsepower deisel engines that drive two 750-kilowatt generators. The smaller engines also powered a hydraulic jacking system that raised and lowered the load.

10.2.2.6 Launch control center.- Final countdown and launch were controlled from a four-story building located just east of the vehicle assembly building. The launch control center was also used in conducting many of the checkout and test operations required during space vehicle assembly. Facilities for various service and support functions are located on the ground floor. The second floor contains telemetry, radio, tracking, instrumentation, data reduction and evaluation equipment. The third floor has four firing rooms which contain monitors and control consoles. One of these rooms is shown in figure 10-10. The fourth floor has projection screens for display of launch site information and conference rooms.

### 10.2.3 Vehicle Checkout Operations

Prelaunch checkout of the Apollo spacecraft and launch vehicles at the Kennedy Space Center underwent a number of variations from the relatively simple flow of operations for the boilerplate flights to the more complex flow for the sophisticated J-missions. The following description applies to the final missions. The flows for the launch vehicle, the lunar module, and the command and service module are described separately up to the point where the vehicles were mated and moved to the launch pad. The description of the launch pad operations pertains to the entire stack.

10.2.3.1 Launch vehicle.- The initial assembly and checkout activities of the launch vehicle were accomplished in two major areas of the vehicle assembly building, the high bay area and the low bay area. The low bay area activities included receipt and inspection of the S-II stage, S-IVB stage and the instrument unit, and the assembly and checkout of the S-II and S-IVB stages. An insulation leak check, J-2 engine leak check and propellant level probe electrical checks were performed on the S-II stage. A fuel tank inspection, engine leak test, hydraulic systems test, and propellant level sensor electrical checks were made on the S-IVB stage.

In the high bay area, the S-IC stage was positioned and secured to the mobile launcher, access platforms were installed and umbilicals were secured. Electrical continuity checks were then made followed by pneumatic, fuel, and engine leak checks, and instrumentation and range safety system checks. The S-II stage was then mated to the S-IC stage, and the S-IVB stage and instrument unit were added. As each stage was mated, electrical continuity and system tests were performed. Following completion of the stage systems tests, launch vehicle integrated tests were accomplished. Vehicle separation, flight commands, sequence malfunction, and emergency detection system checks were made. The spacecraft was then mated and the space vehicle was ready to move to the launch pad.

10.2.3.2 Lunar module.- The lunar module was received at the Kennedy Space Center in two major subassemblies, the ascent stage and the descent stage. The stages were inspected for damage on arrival. In parallel, the landing gear, explosive devices, batteries, rendezvous radar, and abort sensor assembly were received and inspected. The rendezvous radar was then sent to the radio-frequency test facility for checkout, and the abort sensor assembly was sent to the stability and control laboratory for calibration.

Figure 10-10.- Launch control center firing room.

The ascent stage was positioned on the ascent stage work stand and, similarly, the descent stage was positioned on the descent stage work stand. Propulsion and reaction control system gas leak and functional tests were then performed on the two stages. Upon completion of these tests, the descent stage was placed in the altitude chamber and the ascent stage underwent an S-band steerable antenna functional test. The ascent stage was then inverted for a mechanical docking test conducted in conjunction with the command and service module. The ascent and descent stages were then mated in the altitude chamber in preparation for combined systems tests at sea-level pressure and altitude tests. Following combined systems tests, the abort sensor assembly was installed in the spacecraft, after which crew provisions stowage checks were conducted on both the ascent and descent stages. Environmental control system functional tests were then performed at sea-level pressure, the gaseous oxygen and water management system tanks were serviced, and systems to be operated during the altitude tests were verified.

A simulated altitude test run was conducted with a fully stowed cabin using both the prime and backup crews. An unmanned altitude test (run 1) was conducted to verify cabin integrity and environmental control system functions. Two manned altitude tests (runs 2 and 3) were then conducted with the prime and backup crews. After altitude chamber deservicing, an additional chamber run (run 4) was made for systems drying. Following the altitude tests, all descent stage crew provisions, the lunar roving vehicle, and experiment items were stowed and deployed by the flight crew. The lunar roving vehicle was then installed for flight and the lunar module was moved to the landing gear fixture for landing gear installation and testing. The mated lunar module with the landing gear retracted was then installed in the lower section of the spacecraft/lunar module adapter.

10.2.3.3 Command and service module.- The command and service module was received at KSC in four major subassemblies: the launch escape system, the spacecraft/lunar module adapter, the service module, and the command module. The subassemblies underwent the following operations:

a. Launch escape system. The launch escape system components were inspected and taken to the pyrotechnics installation building for assembly, weight and balance measurements, and thrust vector alignment. The subassembly was then transferred to the vehicle assembly building and mated to the command module just prior to moving the space vehicle to the launch pad.

b. Spacecraft/lunar module adapter. The adapter was inspected and delivered to the operations and checkout building integrated test stand where the upper section of the adapter was removed in preparation for installation of the lunar module. After the installation of the landing gear (sec. 10.2.3.2), the lunar module was installed in the lower section of the adapter and alignment was optically verified. The upper section of the adapter was then reinstalled and interior work platforms were added for later operations.

c. Command and service modules. Upon delivery of the command and service modules to the operations and checkout building, the command module heat shield was inspected, and the two spacecraft modules were moved to the altitude chamber and mated. A receiving inspection and side hatch functional test were then performed, umbilical buildup was accomplished, the environmental control system was connected and checked for leaks, and the command and service modules were electrically mated. A cabin leak test was conducted followed by alignment of the crew optical alignment sight and the lunar module active docking target. The lunar module ascent stage was then inverted over the top of the mated command and service modules (sec. 10.2.3.2) and a mechanical docking test was performed. This was followed by a leak test and functional test of the scientific instrument module door thruster system. The scientific experiments were then installed and a combined systems test was performed during which the experiments were functionally verified and selected spacecraft interfaces and systems were checked out.

A simulated altitude test was performed in preparation for manned altitude testing. The command and service modules were then serviced and an unmanned and two manned altitude tests were performed (one with the prime crew and one with the backup crew). Operations following the manned altitude testing included transferring inertial measurement unit power to ground support equipment, draining and drying the environmental control system water system, performing an open-loop communications test, performing a service propulsion system ball valve leak test, removing stowed equipment, performing a post-egress inspection, and powering down the spacecraft. The mated command and service modules were then transferred to a work stand for installation and leak check of the service propulsion system engine nozzle extension, and installation and checkout of the high gain antenna. After antenna checkout, the command and service modules were moved to

the integrated test stand and mated to the spacecraft/lunar module adapter. Ordnance items (except for detonators) were then installed. Upon completion of the ordnance installation, the work platforms were removed and the assembled spacecraft was transferred to the vehicle assembly building. While at the vehicle assembly building, the spacecraft was mechanically mated to the launch vehicle and the launch escape system and hard boost protective cover were installed. The complete space vehicle and mobile launcher were then transported to the launch pad.

10.2.3.4 Launch pad operations.- Upon arrival of the space vehicle and mobile launcher at the launch pad, the mobile service structure was positioned adjacent to the space vehicle, ground support equipment was connected, and the white room was positioned around the command module. An integrated systems test was performed using a launch vehicle simulator to validate command and service module systems and verify ground support equipment interfaces. In parallel, a combined systems test was performed on the lunar module to functionally verify the electronic systems, and leak and functional tests of the gas subsystems were accomplished. Following these tests, a systems interface test was performed to verify the electrical interface between the command and service module and the lunar module. The spacecraft was then electrically mated to the launch vehicle and two space vehicle overall tests were performed. A "plugs out" test was made to verify radio frequency, ordnance, pressurization, propulsion, guidance and control, propellant, and emergency detection systems. A "plugs in" test was performed to verify proper operation of all systems during an automatic firing and flight sequences.

A flight readiness test with simulated aborts and normal mission sequences was performed followed by crew emergency egress practice and a cabin leak test. A test was then conducted to verify hypergolic propellant systems readiness, and hypergolics were loaded in preparation for a countdown demonstration test. The countdown demonstration test verified that the space vehicle and the ground support equipment were in launch status. The test was performed in two stages, wet and dry. In the wet portion of the test, the launch vehicle propellants were on board, the spacecraft was unmanned, and the vehicle was counted down to T minus zero. After recycling the space vehicle to a dry condition (propellants drained), the last hours of countdown were simulated with the crew on board.

Following the countdown demonstration test, preparations were started for the actual countdown. The countdown began approximately 4 days before the launch readiness day, and the final space vehicle checkout and servicing operations were performed. The final phase of the countdown started approximately 9 hours prior to lift-off. During the final phase, the cryogenics were loaded, conditioned, and pressurized; final checks were made on all systems; the propulsion systems were serviced and prepared for launch; and the crew manned the command module. Automatic sequencing started at T minus 187 seconds. The S-IC stage ignition command was given at T minus 8.9 seconds and, at T minus zero, the launch commit was given which caused the holddown arms to retract hydraulically. The holddown arms restrained the launch vehicle until a satisfactory thrust level was achieved, after which the controlled release assemblies provided for gradual release of the vehicle during lift-off.

**10-18**

# 11.0 LUNAR RECEIVING LABORATORY

## 11.1 INTRODUCTION

The Lunar Receiving Laboratory was originally conceived and constructed to provide rigid quarantine conditions for members of the Apollo flight crews, Apollo command modules, and returned lunar samples. The facility was operated in this capacity for the Apollo 11, 12, and 14 missions. Although the quarantine requirement was subsequently relaxed, the facility continued to operate in full support of the returned sample program. This effort, which formed the bulk of the laboratory activities, involved the processing, examination, preliminary analysis, and distribution of lunar material. The laboratory was occupied in 1967 and was certified as ready for quarantine support in June 1969. In the following month, the Lunar Receiving Laboratory commenced operations in support of the Apollo 11 mission.

## 11.2 ORIGINAL CONCEPT

A special subcommittee of the Space Sciences Board, National Academy of Sciences, was convened in 1964 to consider the potential ramifications of working with material, personnel, and equipment returned from the lunar surface. The subcommittee recommended that a facility be constructed for the following purposes:

a. Quarantining returning Apollo crewmembers, equipment, and lunar samples for a specified period

b. Conducting specific biomedical evaluations of lunar samples while isolated to determine whether any lunar sample contained hazardously replicating micro-organisms

c. Conducting time-critical physical science investigations of lunar samples while isolated during the quarantine period

d. Controlling, processing, and preparing lunar samples and distributing samples to designated principal investigators for scientific analysis

e. Providing a repository and curatorial facility for all retained lunar samples

The Lunar Receiving Laboratory was designed and constructed in response to this recommendation.

## 11.3 FACILITIES

The Lunar Receiving Laboratory was designed to provide the functional areas illustrated in figure 11-1. The administrative and nonisolated support areas were separated from the isolated operations areas by a biological barrier that was activated during specified quarantine periods. Each operational unit behind this barrier, as shown in the figure, represented a unique part of the facility.

### 11.3.1 Crew Reception Area

The returning crewmen who had been exposed to lunar material and also to potentially hazardous lunar biological elements were quarantined for a period of approximately 21 days, beginning at departure from the moon. The crew reception area not only provided the facilities for sustenance and comfort of the flight crews and support personnel during the quarantine period, but also provided the capability to house other personnel who might have become exposed to hazardous biological elements in the sample laboratory. The area contained complete living facilities, a recreational area, a medical facility, and an isolated interview room. This entire system was separated from other areas of the laboratory complex and the ambient environment by primary and secondary biological barriers. Since the interior of the command module could also have been contaminated, the spacecraft was sealed and stored in the crew reception area for the duration of the quarantine period.

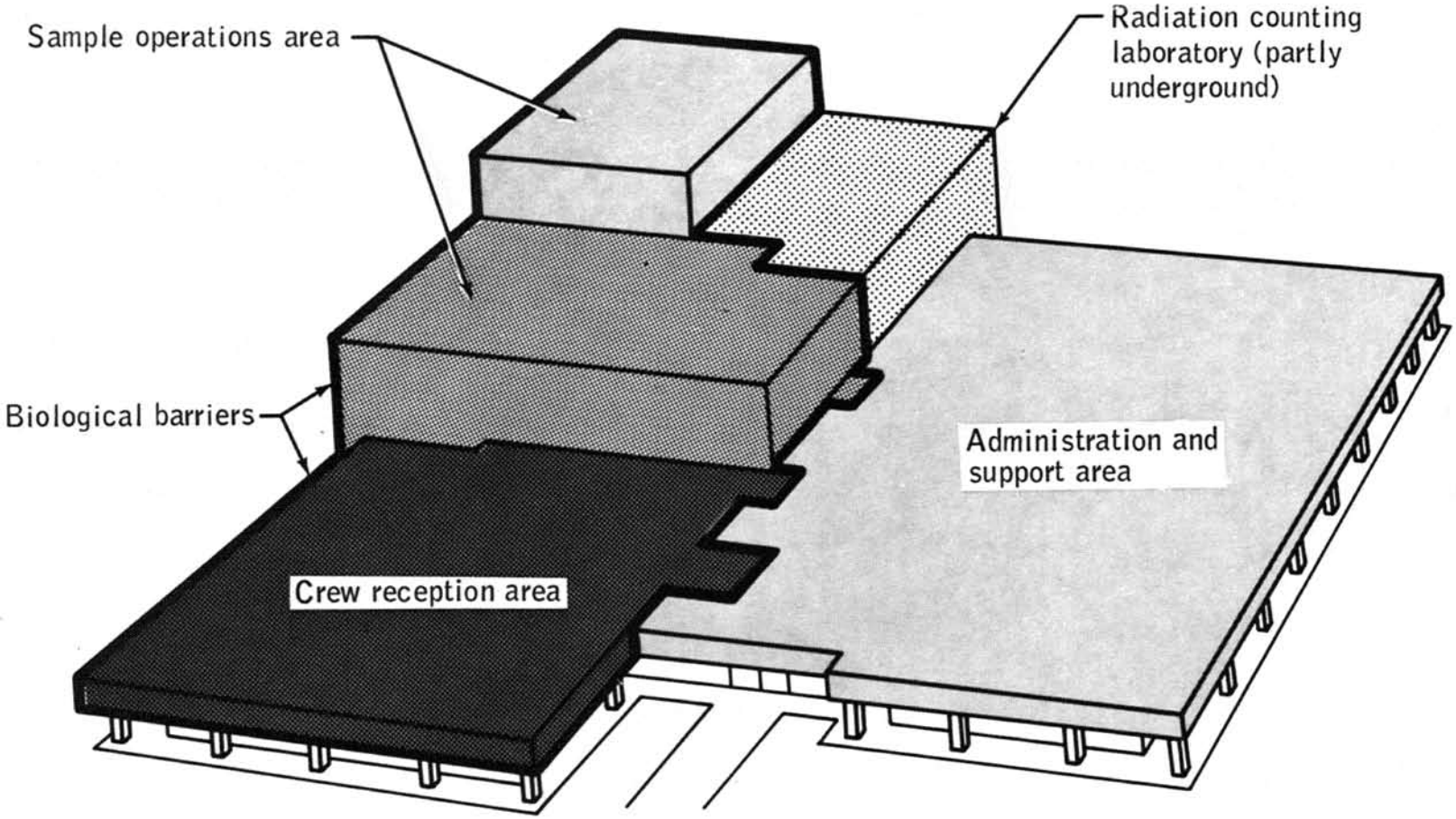


Figure 11-1.- Lunar Receiving Laboratory functional areas.

### 11.3.2 Sample Operations Area

The lunar sample containers were opened and sample examinations were conducted behind a two-way biological barrier system composed of gas-tight glove cabinets and vacuum chambers. This handling and containment system was unique in that conventional containment units are designed to prevent contamination in only one direction. The two-way system was designed to protect laboratory scientists and technicians from contact with lunar material while protecting the samples from terrestrial contamination.

The immediate operations performed on returned lunar samples in the sample operations area included sterilization of the exterior of sample containers, opening and unpacking of the containers in a near vacuum, sampling of effluent gases, visual examination and photography of the samples, division of samples, and preparation of portions of the samples for detailed physical-chemical and biological examinations. The requirement for a vacuum system was later withdrawn, after which a dry nitrogen system was used.

The physical-chemical examination included tests for reactions with atmospheric gases and water vapor, and preliminary examination of the mineralogy, petrography, and chemistry of the lunar samples. Examinations of this kind and of a biological nature were performed in greater detail by other laboratories after the quarantine period.

Lunar samples were used for the following kinds of biological examinations: aerobic and anaerobic culturing; inoculation of plants, eggs, tissue cultures, invertebrates, and vertebrates (normal and germ free); and biochemical analysis.

### 11.3.3 Radiation Counting Laboratory

A radiation counting laboratory (fig. 11-2) was included in the Lunar Receiving Laboratory because some of the induced radioactivity of lunar samples would decay in less time than the quarantine period.

### 11.3.4 Thin Section Laboratory

A thin section laboratory was included in the Lunar Receiving Laboratory to facilitate production of petrographic thin sections of lunar soil and rock fragments. This provided the capability to study in detail the crystal structures of many samples in a timely manner.

## 11.4 OPERATIONS

### 11.4.1 Preliminary Processing and Examination

Closely guarded quarantine control procedures were used for the preliminary processing and examination of the lunar material returned during the Apollo 11, 12, and 14 missions. Figure 11-3 illustrates lunar sample processing for these missions. Included are operations that were accomplished under quarantine conditions and the investigations that came after quarantine was lifted. Quarantine was not required for the Apollo 15, 16, and 17 missions because examination of samples during the early missions had shown a complete absence of pathogenic substances.

The sample laboratory and the vacuum laboratory, located in the sample operations area, were the primary locations for initial sample processing. The vacuum system was used only during the processing of the Apollo 11 and 12 samples. After Apollo 14, the samples were initially processed in two sterilized cabinet systems. The vacuum system and, later, the other cabinet system served primarily as a receiving point from which the lunar samples were distributed to other portions of the Lunar Receiving Laboratory and eventually to the scientific community. All of the initial processing occurred in the same two cabinet systems on Apollo missions 15, 16 and 17 without sterilization of the cabinets.

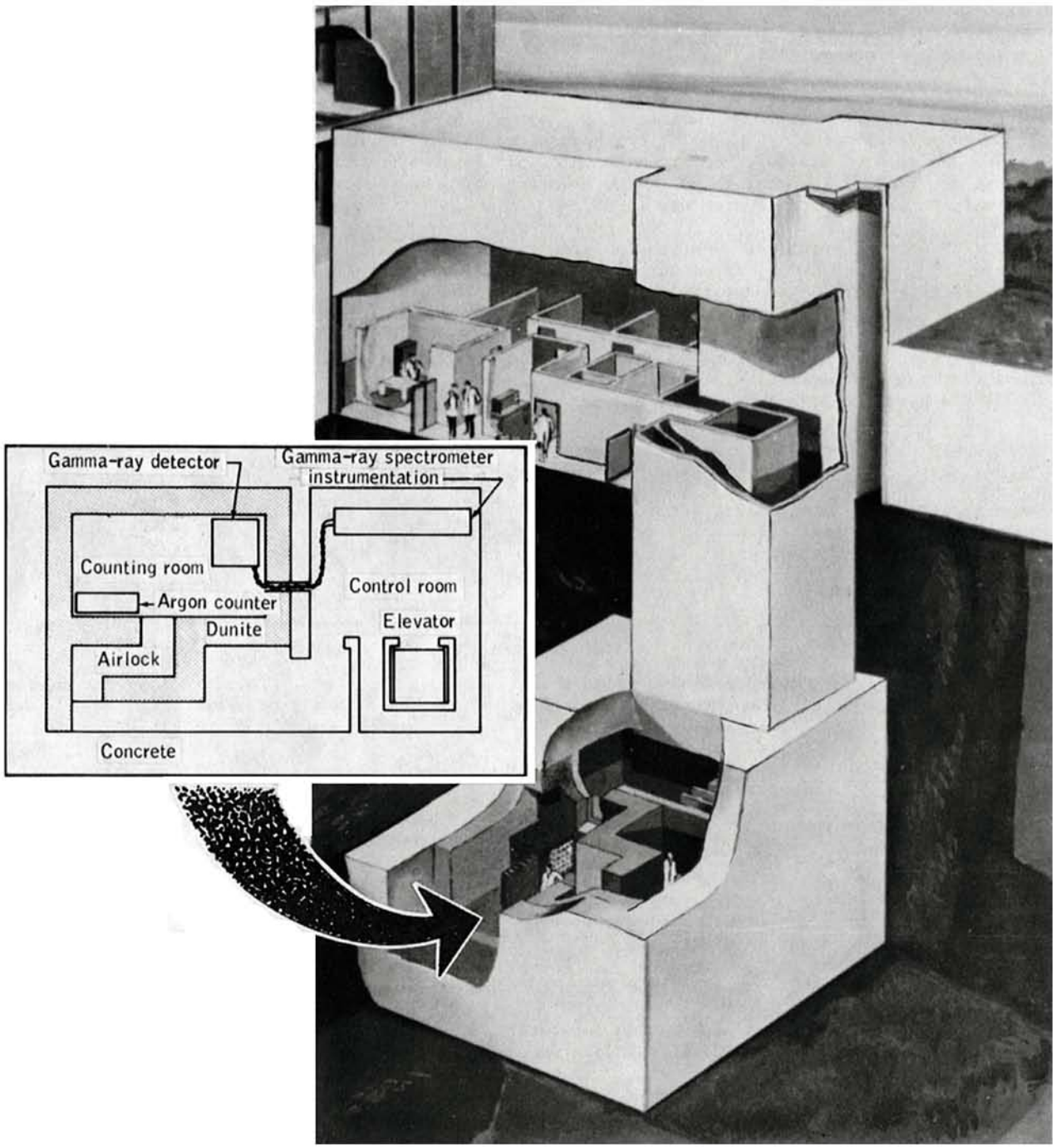


Figure 11-2.- Radiation counting laboratory.

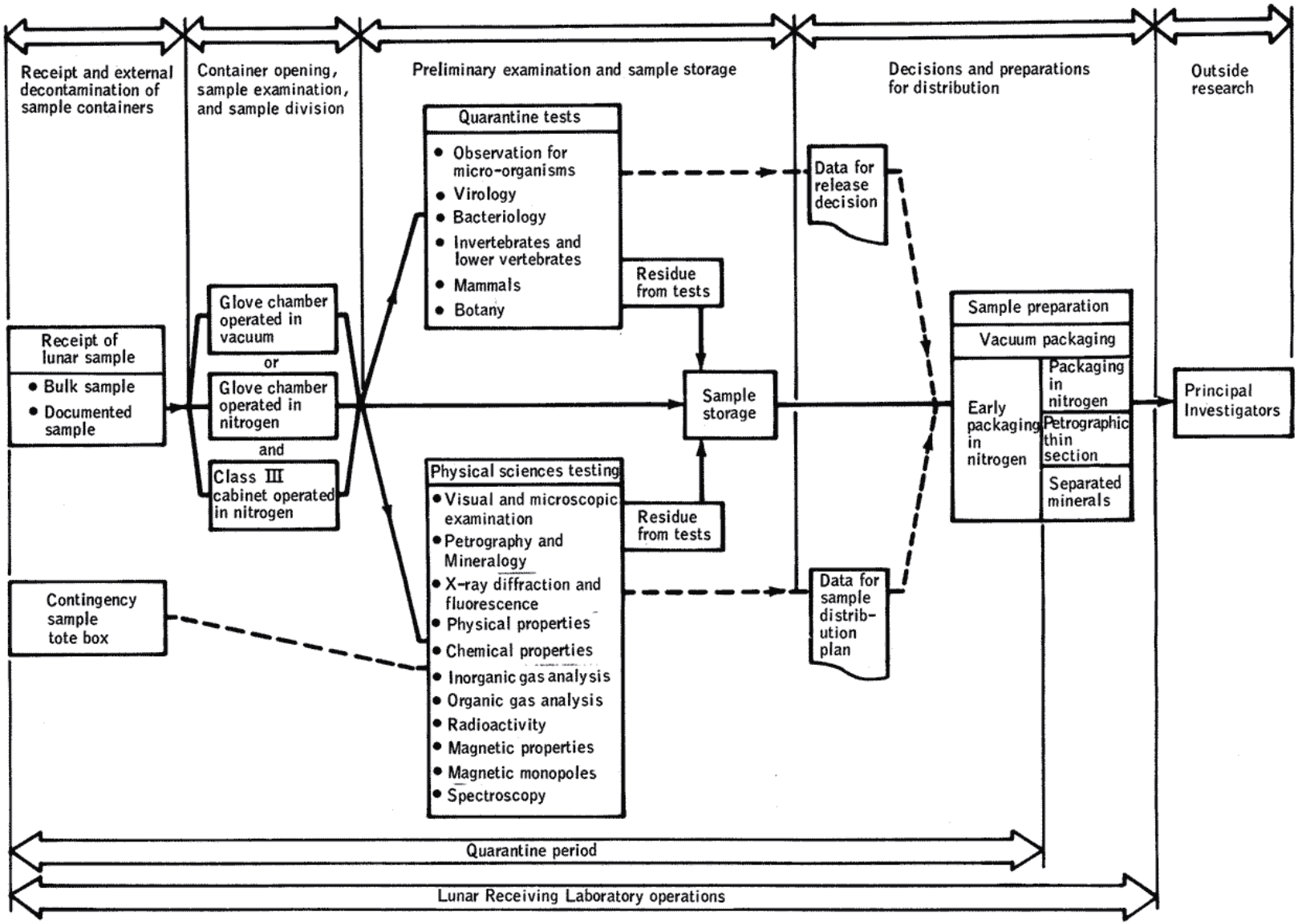


Figure 11-3.- Lunar sample flow diagram.

The processing which occurred in these systems included:

a. Unpacking samples from the return containers

b. Weighing

c. Photography (orthogonal and stereoscopic)

d. Sieving fines

e. Dusting rocks

f. Microscopic examination

g. Modeling (rocks)

h. Determining lunar orientation

i. Initial allocation, including some chipping.

When the quarantine requirements were discontinued after Apollo 14, the complexity of laboratory operations decreased considerably. Although no lunar-derived biological contaminants had been found, certain tests were continued as a safeguard. All subsequent sample processing operations were conducted in nitrogen cabinetry instead of the vacuum system since only the exposure of the lunar material to terrestrial contaminants was of primary interest.

### 11.4.2 Sample Processing

Although lunar samples were cataloged, photographed, and described in the preliminary operations phase, such activity was only the beginning of the scientific work. A portion of the samples from each mission was selected by a Lunar Sample Analysis Planning Team composed of eminent members of the scientific community. This team transmitted an allocation plan to the lunar sample curator, who then implemented the sectioning and packaging of samples. To illustrate the work required, reference is made to sample 12021, which is sample 21 from Apollo 12. Figure 11-4 shows sample 12021 on the slab saw in the beginning stages of sectioning. Before this operation, a detailed cutting plan was prepared with reference to specified allocation requirements. The cutting plan began with the instruction, "Separate from large end, by chipping, all pieces which can be removed by taking advantage of the numerous existing fractures ... make the initial cut with a circular saw such that the thickness of the resulting slice is about 1.5 centimeters." Figure 11-5 illustrates the two "daughter" samples produced. Figure 11-6 illustrates the precise documentation detail which follows the sectioning of a lunar rock. Such drawings, together with laboratory test results, formed data packages that were individually prepared for the samples distributed to selected scientists. These principal investigators were allocated the minimum amount of sample consistent with their intended research, and the detailed drawings were necessary to identify precisely the particular portion of rock allocated for their study.

A Preliminary Examination Team, consisting of between 20 and 40 scientists, was assigned the responsibility of describing the returned lunar samples. The team was made up of NASA scientists and visitors who represented the scientific community. The visitors represented both universities and agencies. The descriptions of the samples are documented in reports published in the periodical Science, in the Preliminary Science Reports (NASA SP series), and in an informal publication of the lunar sample curator's office.

### 11.4.3 Gas Analysis

The functions of the gas analysis laboratory, located in the sample operations area, are broadly grouped into mission-support and mission-related activities. Figure 11-7 is a schematic representation of this laboratory as it existed during the Apollo program.

Figure 11-4.- Lunar sample 12021 undergoing sectioning.

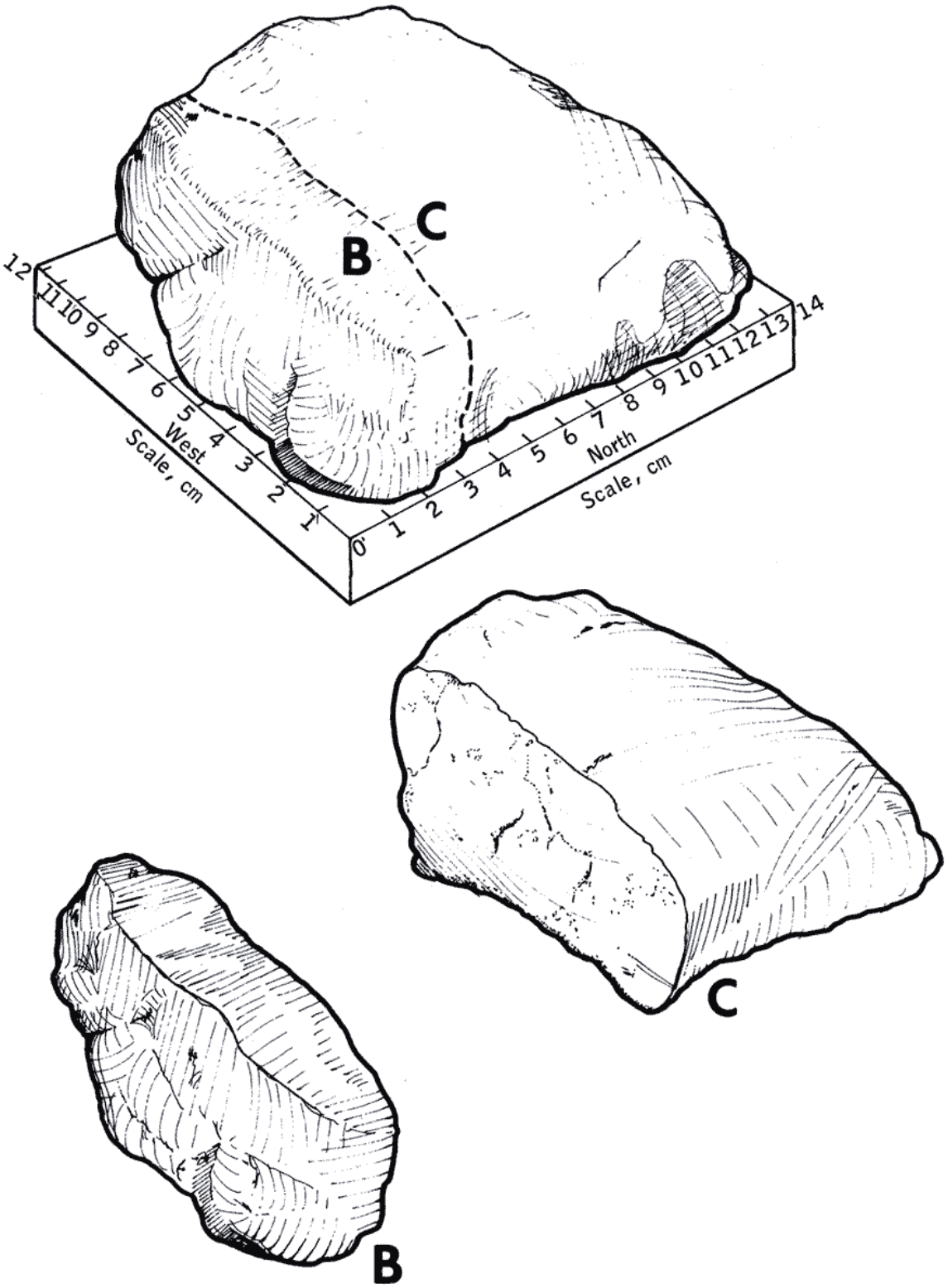


Figure 11-5.- Plan for cutting lunar sample 12021.

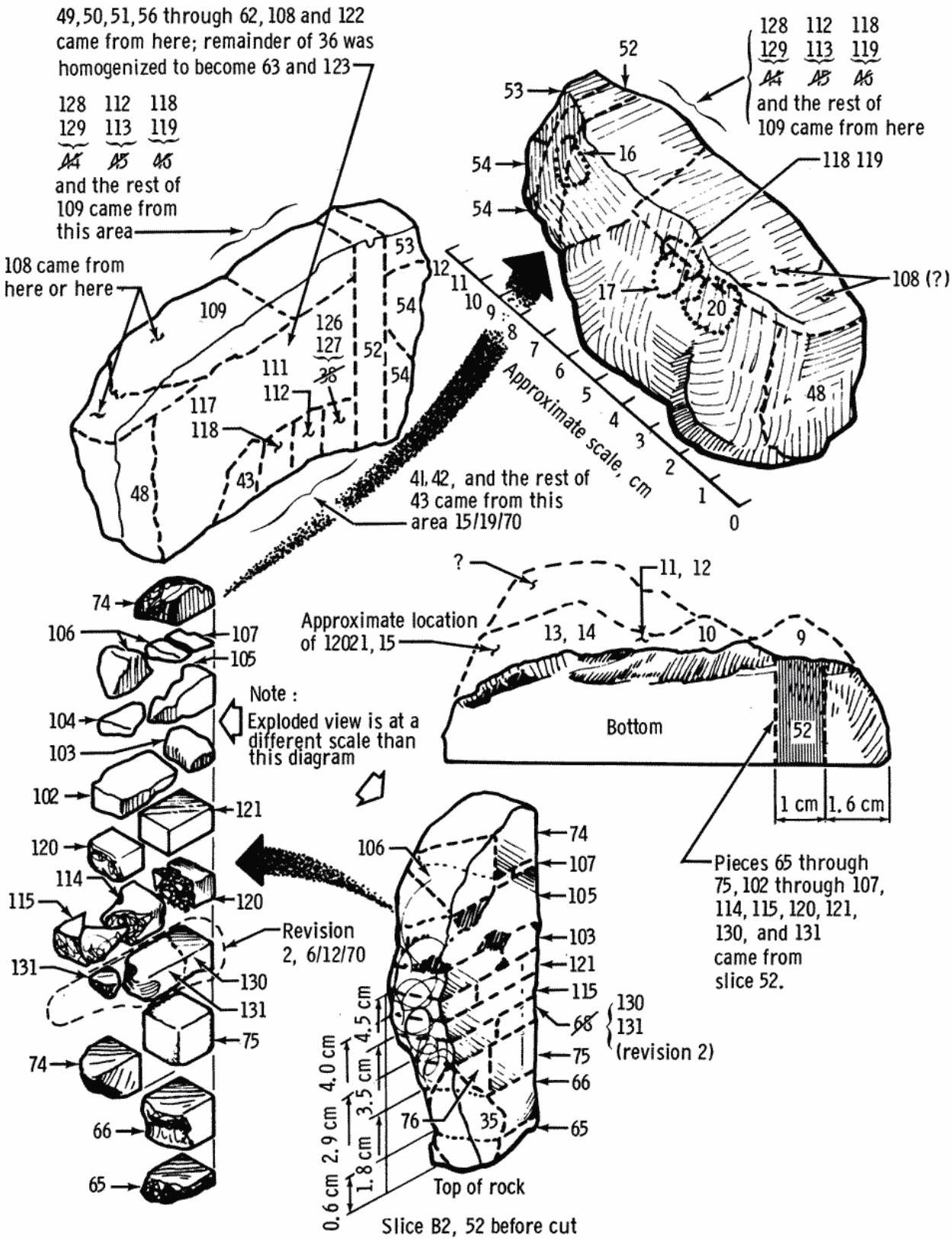


Figure 11-6. - Documentation of slice B, lunar sample 12021, after cutting.

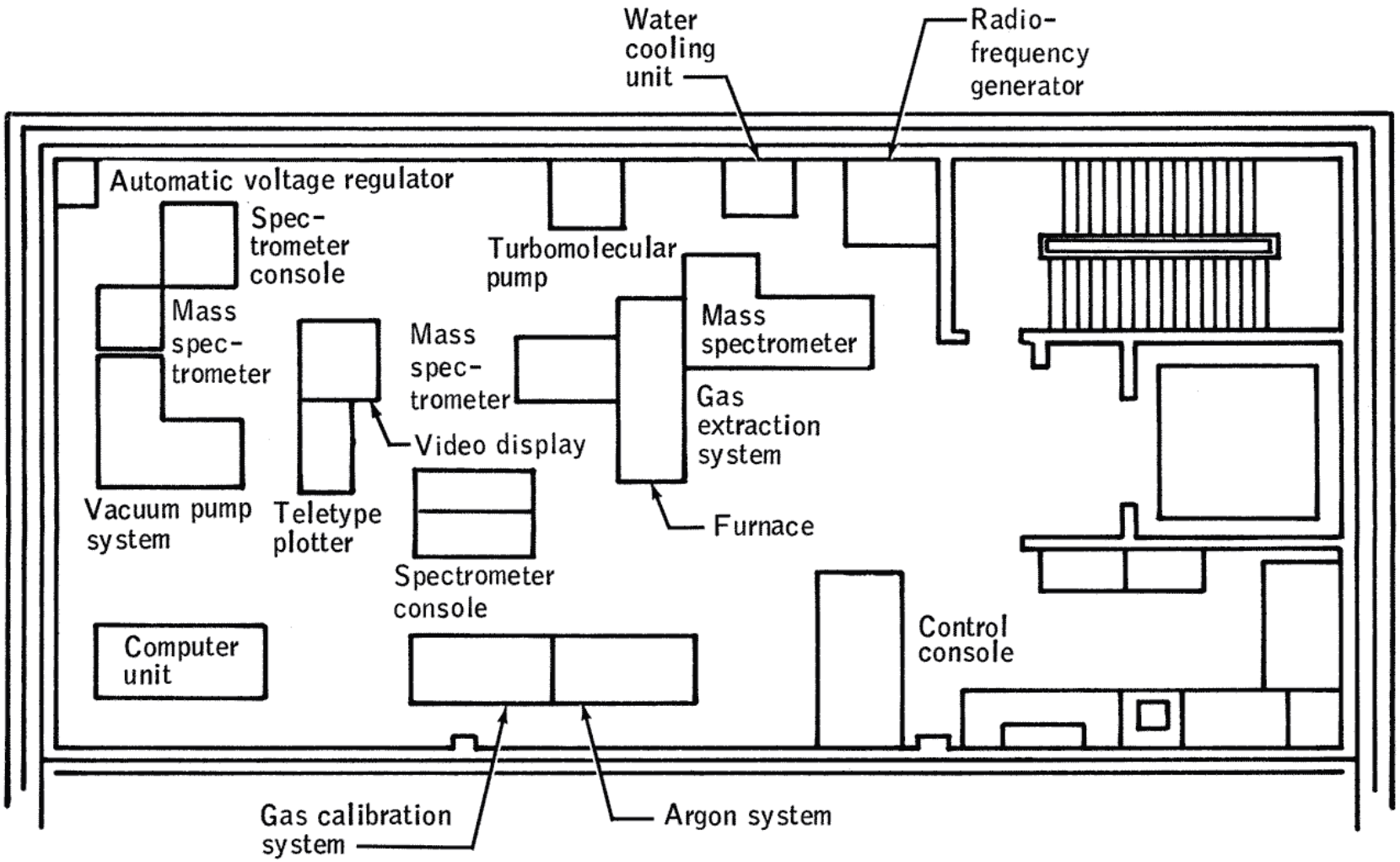


Figure 11-7.- Gas analysis laboratory floor plan.

Mission-support activities were those operations carried out during the preliminary examination phase of the program and included:

a. Organic contamination monitoring

b. Inorganic trace-gas contamination monitoring

c. Preliminary analyses of organic materials in lunar samples

d. Preliminary analyses of total carbon content of lunar samples

e. Analyses of trace gases and radioactive gases in sealed-sample containers

f. Preliminary analyses of noble gases in lunar samples

g. Determination of radioactive gases in lunar samples in conjunction with radiation counting activities

### 11.4.4 Radiation Counting

The radiation counting laboratory was used to measure the emitted radiation from lunar samples through gamma-ray spectrometry. This facility provided the Lunar Receiving Laboratory with the capability to perform nondestructive analysis of lunar samples during the quarantine period and before the short-lived nuclides could significantly decay. The lunar samples selected for radiation counting were packaged in stainless steel vacuum-tight containers. Several samples that weighed between 200 and 2000 grams were counted in this laboratory during the preliminary examination. The samples selected for analysis were purposely varied so that all, or most, geological types were represented.

### 11.4.5 Biological Testing

Portions of the returned lunar samples were distributed to the biological test laboratories located in the sample operations area. The personnel in these laboratories, under quarantine conditions and using extensive test procedures, determined whether the returned samples contained detrimental alien life-forms. All biological testing was performed within special biological cabinetry designed to contain extremely hazardous pathogenic material. The Lunar Receiving Laboratory is the only facility in the world capable of handling a large variety of plant and animal test subjects under such containment conditions. Details of the biological tests conducted during the program are given in section 8.7.

## 11.5 AFTER APOLLO

The Lunar Receiving Laboratory was closed to lunar sample handling when the Apollo 17 preliminary examination phase was concluded. Only a small portion of the material returned from each lunar landing mission was allocated for research. Most of the lunar material is being conserved intact, under nitrogen storage conditions, for future studies when scientific measurement technology is expected to far surpass present capabilities. All sample distribution, storage, and packaging activities have been transferred to the office of the lunar sample curator. Although priorities change with science and technology, the Lunar Receiving Laboratory will remain in history as the first facility designed solely for the containment of extraterrestrial material.

11-12

# APPENDIX A - APOLLO FLIGHT DATA

TABLE A-I.- UNMANNED SATURN LAUNCH VEHICLE AND APOLLO SPACECRAFT DEVELOPMENT FLIGHTS

| Mission | Type | Launch | | | Vehicle configuration | | Additional data |
|---|---|---|---|---|---|---|---|
| | | Complex (a) | Date | Time, G.m.t., hr:min:sec | Launch vehicle | Payload | |
| SA-1 | Launch vehicle development, suborbital | 34 | Oct. 27, 1961 | 15:00:06 | Saturn I with dummy second stage and Jupiter nose cone | | Vehicle achieved altitude of 84.6 miles and range of 206 miles |
| SA-2 | Launch vehicle development, suborbital | 34 | Apr. 25, 1962 | 14:00:34 | Saturn I with dummy second stage and Jupiter nose cone | 22 900 gallons of water for Project Highwater 1 | Water container was detonated at altitude of 65.2 miles after 162.6 seconds of flight |
| SA-3 | Launch vehicle development, suborbital | 34 | Nov. 16, 1962 | 17:45:02 | Saturn I with dummy second stage and Jupiter nose cone | 22 900 gallons of water for Project Highwater 2 | Water container was detonated at altitude of 103.7 miles after 292 seconds of flight |
| SA-4 | Launch vehicle development, suborbital | 34 | Mar. 28, 1963 | 20:11:55 | Saturn I with dummy second stage and Jupiter nose cone | | |
| SA-5 | Launch vehicle development, earth orbital | 37B | Jan. 29, 1964 | 16:25:01 | Saturn I | Jupiter nose cone containing sand ballast to simulate Apollo spacecraft mass | First Saturn I launch vehicle with live second stage |
| A-101 | Launch vehicle and spacecraft development, earth orbital | 37B | May 28, 1964 | 17:07:00 | Saturn I (SA-6) | Boilerplate command and service module, adapter, and launch escape system (BP-13) | Spacecraft and S-IV stage disintegrated during entry into earth atmosphere over Pacific Ocean during 54th revolution |
| A-102 | Launch vehicle and spacecraft development, earth orbital | 37B | Sep. 18, 1964 | 16:22:43 | Saturn I (SA-7) | Boilerplate command and service module, adapter, and launch escape system (BP-15) | Spacecraft S-IV stage disintegrated during entry into earth atmosphere over Indian Ocean during 59th revolution |
| A-103 | Micrometeoroid experiment, earth orbital | 37B | Feb. 16, 1965 | 14:37:03 | Saturn I (SA-9) | Boilerplate command and service module, adapter, and launch escape system (BP-16). Pegasus A satellite enclosed by service module until orbital insertion | Initial "operational" launch vehicle in Saturn I series. Satellite was commanded off August 29, 1968 |
| A-104 | Micrometeoroid experiment and spacecraft development, earth orbital | 37B | May 25, 1965 | 07:35:01 | Saturn I (SA-8) | Boilerplate command and service module, adapter and launch escape system (BP-26). Pegasus B satellite enclosed by service module until orbital insertion | Satellite was commanded off August 29, 1968 |
| A-105 | Micrometeoroid experiment, earth orbital | 37B | July 30, 1965 | 13:00:00 | Saturn I (SA-10) | Boilerplate command and service module, adapter, and launch escape system (BP-9A). Pegasus C satellite enclosed by service module until orbital insertion | Satellite was commanded off August 29, 1968, and disintegrated during entry into earth atmosphere August 4, 1969 |

[a]All vehicles were launched from the U.S. Air Force Eastern Test Range, Cape Kennedy, Florida.

TABLE A-II.- UNMANNED APOLLO SPACECRAFT ABORT TESTS[a]

| Mission | Type | Launch | | Vehicle configuration | | Trajectory data | | Flight duration, hr:min:sec |
|---|---|---|---|---|---|---|---|---|
| | | Date | Time, G.m.t., hr:min:sec | Launch vehicle | Spacecraft | Altitude, ft, m.s.l. | Range, ft | |
| PA-1 | Pad abort test | Nov. 7, 1963 | 16:00:01 | | Boilerplate command module and launch escape system (BP-6) | 9 270 | 8 220 | 00:02:45.1 |
| A-001 | High-dynamic pressure (transonic) abort test | May 13, 1964 | 13:00:00 | Little Joe II (12-50-2) | Boilerplate command and service module, and launch escape system (BP-12) | 29 772 | 22 400 | 00:05:50.3 |
| A-002 | [b]Maximum-dynamic-pressure abort test | Dec. 8, 1964 | 15:00:00 | Little Joe II (12-51-1) | Boilerplate command and service module, and launch escape system (BP-23) | 50 360 | 32 800 | 00:07:23.4 |
| A-003 | [c]High-altitude abort test | May 19, 1965 | 13:01:04 | Little Joe II (12-51-2) | Boilerplate command and service module, and launch escape system (BP-22) | 19 800 | 18 200 | 00:05:02.8 |
| PA-2 | Pad abort test | June 29, 1965 | 13:00:01 | | Boilerplate command module and launch escape system (BP-23A) | 9 258 | 7 620 | 00:01:52.6 |
| A-004 | [d]Power-on tumbling abort test | Jan. 20, 1966 | 15:17:01 | Little Joe II (12-51-3) | Modified Block I command and service module and launch escape system (SC-002) | 78 180 | 113 624 | 00:06:50.0 |

[a]All flights were suborbital and were launched from Complex 36 of the White Sands Missile Range, New Mexico. The launch site altitude was approximately 4000 ft above mean sea level.

[b]Canards used for first time to orient and stabilize launch escape vehicle.

[c]Launch vehicle failed structurally prior to achieving desired altitude of 120 000 feet above mean sea level. Low-altitude abort initiated at 12 400 feet.

[d]Tumbling of launch escape vehicle and automatic abort were initiated by pitch-up maneuver of launch vehicle at altitude of approximately 60 000 feet above mean sea level.

TABLE A-III.- UNMANNED APOLLO/SATURN FLIGHTS

| Mission | Type (a) | Launch | | | | Vehicle configuration | | Flight duration, hr:min:sec |
|---|---|---|---|---|---|---|---|---|
| | | Site | Complex | Date | Time, G.m.t., hr:min:sec | Launch vehicle | Spacecraft | |
| [b]AS-201 | Spacecraft and launch vehicle development, suborbital | A.F. Eastern Test Range | 34 | Feb. 26, 1966 | 16:12:01 | Saturn IB (SA-201) | Modified Block I command and service module, adapter and launch escape system (SC-009) | 00:37:19.7 |
| AS-203 | Launch vehicle development, earth orbital | A.F. Eastern Test Range | 37B | July 5, 1966 | 14:53:17 | Saturn IB with nose cone (SA-203) | | (c) |
| AS-202 | Spacecraft and launch vehicle development, suborbital | A.F. Eastern Test Range | 34 | Aug. 25, 1966 | 17:55:32 | Saturn IB (SA-202) | Block I command and service module, adapter, and launch escape system (SC-011) | 01:33:02 |
| [d]Apollo 4 | A | Kennedy Space Center | 39A | Nov. 9, 1967 | 12:00:01 | Saturn V (SA-501) | Block I command and service module, adapter, and launch escape system (SC-017), and lunar module test article | 08:37:09.2 |
| [e]Apollo 5 | B | A.F. Eastern Test Range | 37B | Jan. 22, 1968 | 22:48:08 | Saturn IB (SA-204) | Modified lunar module (LM-1), adapter, and nose cone | [f]07:52:10 |
| [g]Apollo 6 | A | Kennedy Space Center | 39A | Apr. 4, 1968 | 12:00:01 | Saturn V (SA-502) | Block I command and service module, adapter and launch escape system (SC-020), and lunar module test article | 09:57:19.9 |

[a]Mission types A and B are defined in table B-I.

[b]Initial flight of Saturn IB launch vehicle.

[c]S-IVB stage destroyed after four revolutions.

[d]Initial flight of Saturn V launch vehicle. Spacecraft boosted to apogee of 9769 miles after two revolutions to simulate lunar-return entry conditions.

[e]Initial flight of lunar module.

[f]Final communication with ascent stage prior to impact.

[g]S-IVB failed to restart at end of second revolution. Spacecraft propulsion used to achieve 12 020-mile apogee to simulate lunar-return entry conditions.

TABLE A-IV.- MANNED APOLLO/SATURN FLIGHTS

| Mission | Type (a) | Crew (b) | Launch data | | | | Vehicles | | | Flight duration, hr:min:sec |
|---|---|---|---|---|---|---|---|---|---|---|
| | | | Site | Complex | Date | Time, G.m.t., hr:min:sec | Launch vehicle | Description | Name (c) | |
| Apollo 7 | C | Prime:<br>Schirra<br>Eisele<br>Cunningham<br>Backup:<br>Stafford<br>Young<br>Cernan | A.F. Eastern Test Range | 34 | Oct. 11, 1968 | 15:02:45 | Saturn IB (SA-205) | Block II command and service module (CSM-101), adapter, and launch escape system | Apollo 7 | 260:09:03 |
| Apollo 8 | C' | Prime:<br>Borman<br>Lovell<br>Anders<br>Backup:<br>Armstrong<br>Aldrin<br>Haise | Kennedy Space Center | 39A | Dec. 21, 1968 | 12:51:00 | Saturn V (SA-503) | Block II command and service module (CSM-103), adapter, launch escape system, and lunar module test article | Apollo 8 | 147:00:42 |
| Apollo 9 | D | Prime:<br>McDivitt<br>Scott<br>Schweickart<br>Backup:<br>Conrad<br>Gordon<br>Bean | Kennedy Space Center | 39A | Mar. 3, 1969 | 16:00:00 | Saturn V (SA-504) | Block II command and service module (CSM-104), lunar module (LM-3), adapter, and launch escape system | CSM-Gumdrop<br>LM-Spider | 241:00:54 |
| Apollo 10 | F | Prime:<br>Stafford<br>Young<br>Cernan<br>Backup:<br>Cooper<br>Eisele<br>Mitchell | Kennedy Space Center | 39B | May 18, 1969 | 16:49:00 | Saturn V (SA-505) | Block II command and service module (CSM-106), lunar module (LM-4), adapter, and launch escape system | CSM-Charley Brown<br>LM-Snoopy | 192:03:23 |
| Apollo 11 | G | Prime:<br>Armstrong<br>Collins<br>Aldrin<br>Backup:<br>Lovell<br>Anders<br>Haise | Kennedy Space Center | 39A | July 16, 1969 | 13:32:00 | Saturn V (SA-506) | Block II command and service module (CSM-107), lunar module (LM-5), adapter, and launch escape system | CSM-Columbia<br>LM-Eagle | 195:18:35 |
| Apollo 12 | H | Prime:<br>Conrad<br>Gordon<br>Bean<br>Backup:<br>Scott<br>Worden<br>Irwin | Kennedy Space Center | 39A | Nov. 14, 1969 | 16:22:00 | Saturn V (SA-507) | Block II command and service module (CSM-108), lunar module (LM-6), adapter, and launch escape system | CSM-Yankee Clipper<br>LM-Intrepid | 244:36:25 |
| [d]Apollo 13 | H | Prime:<br>Lovell<br>[e]Swigert<br>Haise<br>Backup:<br>Young<br>Mattingly<br>Duke | Kennedy Space Center | 39A | Apr. 11, 1970 | 19:13:00 | Saturn V (SA-508) | Block II command and service module (CSM-109), lunar module (LM-7), adapter, and launch escape system | CSM-Odyssey<br>LM-Aquarius | 142:54:41 |
| Apollo 14 | H | Prime:<br>Shepard<br>Roosa<br>Mitchell<br>Backup:<br>Cernan<br>Evans<br>Engle | Kennedy Space Center | 39A | Jan. 31, 1971 | 21:03:02 | Saturn V (SA-509) | Block II command and service module (CSM-110), lunar module (LM-8), adapter, and launch escape system | CSM-Kitty Hawk<br>LM-Antares | 216:01:58 |
| Apollo 15 | J | Prime:<br>Scott<br>Worden<br>Irwin<br>Backup:<br>Gordon<br>Brand<br>Schmitt | Kennedy Space Center | 39A | July 26, 1971 | 13:34:00 | Saturn V (SA-510) | Block II command and service module (CSM-112), lunar module (LM-10), adapter and launch escape system | CSM-Endeavor<br>LM-Falcon | 259:11:53 |

TABLE A-IV.- MANNED APOLLO/SATURN FLIGHTS - Concluded

| Mission | Type (a) | Crew (b) | Launch data | | | | Vehicles | | | Flight duration, hr:min:sec |
|---|---|---|---|---|---|---|---|---|---|---|
| | | | Site | Complex | Date | Time, G.m.t., hr:min:sec | Launch vehicle | Description | Name (c) | |
| Apollo 16 | J | Prime:<br>Young<br>Mattingly<br>Duke<br>Backup:<br>Haise<br>Roosa<br>Mitchell | Kennedy Space Center | 39A | Apr. 16, 1972 | 17:54:00 | Saturn V (SA-511) | Block II command and service module (CSM-113), lunar module (LM-11), adapter and launch escape system | CSM-Caspar<br>LM-Orion | 265:51:05 |
| Apollo 17 | J | Prime:<br>Cernan<br>Evans<br>Schmitt<br>Backup:<br>Young<br>Roosa<br>Duke | Kennedy Space Center | 39A | Dec. 7, 1972 | 05:33:00 | Saturn V (SA-512) | Block II command and service module (CSM-114), lunar module (LM-12), adapter, and launch escape system | CSM-America<br>LM-Challenger | 301:51:59 |

[a]Mission types defined in table B-I.

[b]Crewmen are listed in order of Commander, Command Module Pilot, and Lunar Module Pilot.

[c]Spacecraft names assigned for identification in radio communication.

[d]Mission aborted prior to scheduled lunar landing.

[e]Backup crewman Swigert replaced prime crewman Mattingly 2 days before launch.

TABLE A-V.- LUNAR SURFACE OPERATIONS

| Mission | Crewmen (a) | Landing data | | | | | Extravehicular activity | | | Samples collected, kg | Surface stay time, hr:min:sec |
|---|---|---|---|---|---|---|---|---|---|---|---|
| | | Area | Latitude | Longitude | Date | Time, G.m.t., hr:min:sec | Traverse vehicle | Distance traveled, km | Duration, hr:min:sec | | |
| Apollo 11 | Armstrong<br>Aldrin | Sea of Tranquility | 0.7°N | 23.4°E | July 20, 1969 | 20:17:40 | None | ∿1 | [b]02:31:40 | 21.0 | 21:36:21 |
| Apollo 12 | Conrad<br>Bean | Ocean of Storms | 3.2°S | 23.4°W | Nov. 19, 1969 | 06:54:36 | None | First: ∿1<br>Second: 1.3<br>Total: ∿2.3 | First: 03:56:03<br>Second: 03:49:15<br>[c]Total: 07:45:18 | First: 16.7<br>Second: 17.6<br>Total: 34.3 | 31:31:12 |
| Apollo 14 | Shepard<br>Mitchell | Fra Mauro | 3.6°S | 17.5°W | Feb. 5, 1971 | 09:18:11 | Modular equipment transporter | First: ∿1<br>Second: 3.0<br>Total: ∿4.0 | First: 04:47:50<br>Second: 04:34:41<br>[d]Total: 09:22:31 | First: 20.5<br>Second: 22.3<br>Total: 42.8 | 33:30:31 |
| Apollo 15 | Scott<br>Irwin | Hadley-Apennine | 26.1°N | 3.7°E | July 30, 1971 | 22:16:29 | LRV-1 | First: 10.3<br>Second: 12.5<br>Third: 5.1<br>Total: 27.9 | Standup: 00:33:07<br>First: 06:32:42<br>Second: 07:12:14<br>Third: 04:49:50<br>[d]Total: 19:07:53 | First: 14.5<br>Second: 34.9<br>Third: 27.3<br>Total: 76.7 | 66:54:53 |
| Apollo 16 | Young<br>Duke | Descarte | 9.0°S | 15.5°E | Apr. 21, 1972 | 02:23:35 | LRV-2 | First: 4.2<br>Second: 11.1<br>Third: 11.4<br>Total: 26.7 | First: 07:11:02<br>Second: 07:23:11<br>Third: 05:40:03<br>[d]Total: 20:14:16 | First: 29.9<br>Second: 29.0<br>Third: 35.4<br>Total: 94.3 | 71:02:13 |
| Apollo 17 | Cernan<br>Schmitt | Taurus-Littrow | 20.2°N | 30.8°E | Dec. 11, 1972 | 19:54:57 | LRV-3 | First: 3.3<br>Second: 18.9<br>Third: 11.6<br>Total: 33.8 | First: 07:11:53<br>Second: 07:36:56<br>Third: 07:15:08<br>[d]Total: 22:03:57 | First: 14.3<br>Second: 34.1<br>Third: 62.0<br>Total: 110.4 | 74:59:40 |

[a]Crewmen listed in order of Commander and Lunar Module Pilot.

[b]Based upon times of hatch opening and closing.

[c]Based upon times of egress and ingress.

[d]Based upon times at which cabin pressure reached 3.0 psi during depressurization and repressurization.

TABLE A-VI.- MANNED ORBITAL OPERATIONS AND INFLIGHT EXTRAVEHICULAR ACTIVITY

| Mission | Earth revolutions | Earth orbital extravehicular activity | | Lunar revolutions | Command Module Pilot solo operations | | |
|---|---|---|---|---|---|---|---|
| | | Crewmen (a) | Duration, hr:min | | Pilot | Lunar revolutions | Transearth extravehicular activity, hr:min:sec (b) |
| Apollo 7 | 163 | — | — | — | — | — | -- |
| Apollo 8 | [c]1 | — | — | 10 | — | -- | -- |
| Apollo 9 | 151 | Scott<br>Schweickart | [e]1:01<br>1:07 | — | — | -- | -- |
| Apollo 10 | [c]1 | — | — | 31 | -- | -- | -- |
| Apollo 11 | [c]1 | — | -- | 30 | -- | -- | -- |
| Apollo 12 | [c]1 | — | — | 45 | — | -- | -- |
| Apollo 13 | [c]1 | -- | — | — | — | -- | -- |
| Apollo 14 | [c]1 | — | — | 34 | — | -- | -- |
| Apollo 15 | [c]1 | -- | -- | 74 | Worden | 36 | 00:39:07 |
| Apollo 16 | [c]1 | -- | -- | 64 | Mattingly | 40 | 01:23:42 |
| Apollo 17 | [d]2 | — | — | 75 | Evans | 39 | 01:05:44 |

[a]Crewmen listed in order of Command Module Pilot and Lunar Module Pilot.

[b]Extravehicular activity time based upon times at which cabin pressure reached 3.0 psi during depressurization and repressurization.

[c]Translunar injection performed over Pacific Ocean before completion of second revolution.

[d]Translunar injection performed over Atlantic Ocean.

[e]Extravehicular activity durations shown are based upon times at which cabin pressure reached 3.0 psi during depressurization and repressurization. Durations based on other events are as follows.

(1) Hatch open to hatch closed: CMP - 47 min, LMP - 1 hr 1 min.
(2) Egress to ingress: LMP - 47 min 3 sec.
(3) Arrive at and leave EVA station: LMP - 37 min.

TABLE A-VII.- RECOVERY DATA

| Mission | Landing data | | | | | | | Time required for uprighting, min | U.S.S. recovery ship |
|---|---|---|---|---|---|---|---|---|---|
| | Date | Time, G.m.t., hr:min:sec | Ocean | Latitude (a) | Longitude (a) | Distance from target, mi. (a) | Command module flotation attitude | | |
| Unmanned Missions | | | | | | | | | |
| AS-201 | Feb. 26, 1966 | 16:49:20 | Atlantic | 8°11'S | 11°09'W | ∿45 | Upright | -- | Boxer |
| AS-202 | Aug. 25, 1966 | 18:48:34 | Pacific | 16°07'N | 168°54'E | ∿200 | Upright | -- | Hornet |
| Apollo 4 | Nov. 9, 1967 | 20:37:10 | Pacific | 30°06'N | 172°32'W | 10.3 | Upright | -- | Bennington |
| Apollo 6 | Apr. 4, 1968 | 21:57:21 | Pacific | 27°40'N | 157°55'W | ∿36 | (b) | ∿2 | Okinawa |
| Manned Missions | | | | | | | | | |
| Apollo 7 | Oct. 22, 1968 | 11:11:48 | Atlantic | 27°38'N | 64°09'W | 1.9 | Inverted | [c]12 | Essex |
| Apollo 8 | Dec. 27, 1968 | 15:51:42 | Pacific | 8°06'N | 165°01'W | 1.4 | Inverted | 6.0 | Yorktown |
| Apollo 9 | Mar. 13, 1969 | 17:00:53 | Atlantic | 23°13'N | 67°59'W | 2.7 | Upright | -- | Guadalcanal |
| Apollo 10 | May 26, 1969 | 16:52:23 | Pacific | 15°04'S | 164°39'W | 1.3 | Upright | -- | Princeton |
| Apollo 11 | Jul. 24, 1969 | 16:50:35 | Pacific | 13°18'N | 169°09'W | 1.7 | Inverted | 7.6 | Hornet |
| Apollo 12 | Nov. 24, 1969 | 20:58:25 | Pacific | 15°47'S | 165°09'W | 2.0 | Inverted | 4.5 | Hornet |
| Apollo 13 | Apr. 17, 1970 | 18:07:41 | Pacific | 21°38'S | 165°22'W | 1.0 | Upright | -- | Iwo Jima |
| Apollo 14 | Feb. 9, 1971 | 21:05:00 | Pacific | 27°01'S | 172°40'W | 0.6 | Upright | -- | New Orleans |
| Apollo 15 | Aug. 7, 1971 | 20:45:53 | Pacific | 26°08'N | 158°08'W | 1.0 | Upright | -- | Okinawa |
| Apollo 16 | Apr. 27, 1972 | 19:45:05 | Pacific | 0°42'S | 156°13'W | 3.0 | Inverted | 4.5 | Ticonderoga |
| Apollo 17 | Dec. 19, 1972 | 19:24:59 | Pacific | 17°53'S | 166°07'W | 1.0 | Upright | -- | Ticonderoga |

[a]The coordinates shown are the best estimate of the actual command module landing point and may be based upon recovery ship position data, command module computer data, or trajectory reconstruction.

[b]Command module was upright when sighted; however, loss of VHF recovery beacon for a period of 2 minutes indicated that the command module had probably been inverted prior to sighting.

[c]Uprighting bag inflation was not initiated until approximately 8 minutes after landing.

A-10

# APPENDIX B - APOLLO MISSION TYPE DESIGNATIONS

TABLE B-I.- APOLLO MISSION TYPE DESIGNATIONS

| Type | Mission assignment | Trajectory | Purpose |
|---|---|---|---|
| A | Apollo 4<br>Apollo 6 | Earth orbital | Launch vehicle and spacecraft development. |
| B | Apollo 5 | Earth orbital | Lunar module unmanned flight evaluation. |
| C | Apollo 7 | Earth orbital | Command and service module manned flight demonstration. |
| C' | Apollo 8 | Lunar orbital | Command and service module manned flight demonstration. |
| D | Apollo 9 | Earth orbital | Lunar module manned flight demonstration. |
| E | -- | Earth orbital | Lunar module manned flight demonstration, augmenting mission type D objectives. |
| F | Apollo 10 | Lunar orbital | Lunar module manned flight demonstration. |
| G | Apollo 11 | Lunar landing | Manned lunar landing demonstration. |
| H | Apollo 12<br>Apollo 13<br>Apollo 14 | Lunar landing | Precision manned lunar landing demonstration and systematic lunar exploration. |
| J | Apollo 15<br>Apollo 16<br>Apollo 17 | Lunar landing | Extensive scientific investigation of moon on lunar surface and from lunar orbit. |

# APPENDIX C - APOLLO SPACECRAFT WEIGHTS

TABLE C-I.- APOLLO SPACECRAFT WEIGHTS[a]
(Unmanned Flights)

| Mission phase/assembly | Spacecraft/mission | | | | | |
|---|---|---|---|---|---|---|
| | CSM-002 A-004 | CSM-009 AS-201 | CSM-011 AS-202 | CSM-017/LTA-10R Apollo 4 | LM-1 Apollo 5 | CSM-020/LTA-2R Apollo 6 |
| Spacecraft at launch: | | | | | | |
| [b]Command and service modules | (c) | 33 805 | 44 385 | 51 591 | - | 55 420 |
| [b]Lunar module or test article | - | - | - | 29 500 | 31 528 | 26 001 |
| Spacecraft/lunar module adapter | (c) | 3 691 | 3 725 | 3 880 | (d) | 3 886 |
| Launch escape system | (c) | 8 334 | 8 611 | 8 710 | - | 8 886 |
| Total weight: | 32 680 | 45 830 | 56 721 | 93 681 | 31 528 | 94 193 |
| [b]Command module at entry interface | - | - | - | 11 949 | - | 12 508 |
| [b]Command module at landing | [e]10 286 | (c) | (c) | 10 540 | - | 11 260 |

[a]All values in pounds.
[b]Propellants and other expendables included.
[c]Data not available.
[d]Adapter was considered part of launch vehicle.
[e]Based on measured weights at launch.

TABLE C-I.- APOLLO SPACECRAFT WEIGHTS[a] - Continued

(Apollo 7 through Apollo 12)

| Mission phase/assembly | Spacecraft/mission | | | | | |
|---|---|---|---|---|---|---|
| | CSM-101 Apollo 7 | CSM-103/LTA-B Apollo 8 | CSM-104/LM-3 Apollo 9 | CSM-106/LM-4 Apollo 10 | CSM-107/LM-5 Apollo 11 | CSM-108/LM-6 Apollo 12 |
| Spacecraft at launch: | | | | | | |
| Command and service modules | 32 586 | 63 531 | 59 086 | 63 567 | 63 508 | 63 578 |
| Lunar module or test article | - | 19 900 | 32 132 | 30 735 | 33 297 | 33 587 |
| Spacecraft/lunar module adapter | 3 852 | 3 951 | 4 012 | 3 970 | 3 951 | 3 962 |
| Launch escape system | 8 874 | 8 890 | 8 869 | 8 934 | 8 910 | 8 963 |
| Total: | 45 312 | 96 272 | 104 099 | 107 206 | 109 666 | 110 090 |
| Spacecraft after lunar orbit insertion: | | | | | | |
| Command and service modules | - | 46 743 | - | 38 697 | 38 743 | 38 751 |
| Lunar module | - | - | - | 30 732 | 33 295 | 33 584 |
| Total: | - | 46 743 | - | 69 429 | 72 038 | 72 336 |
| Lunar module at lunar landing: | | | | | | |
| Ascent stage | - | - | - | - | 10 914 | 10 827 |
| Descent stage | - | - | - | - | 5 239 | 5 737 |
| Total: | - | - | - | - | 16 153 | 16 564 |
| Lunar module ascent stage at lunar lift-off | - | - | [b]10 216 | [b]8 273 | 10 777 | 10 750 |
| [c]Lunar module ascent stage at jettison | - | - | [d]5 616 | [d]5 243 | 5 463 | 5 437 |
| Command module at earth entry interface | 12 356 | 12 171 | 12 257 | 12 137 | 12 096 | 12 277 |
| Command module at landing | 11 409 | 10 977 | 11 094 | 10 901 | 10 873 | 11 050 |

[a]All values are in pounds and include propellants and other expendables.

[b]At staging.

[c]Unmanned.

TABLE C-I.- APOLLO SPACECRAFT WEIGHTS[a] - Concluded

(Apollo 13 through Apollo 17)

| Mission phase/assembly | Spacecraft/mission | | | | |
|---|---|---|---|---|---|
| | CSM-109/LM-7 Apollo 13 | CSM-110/LM-8 Apollo 14 | CSM-112/LM-10 Apollo 15 | CSM-113/LM-11 Apollo 16 | CSM-114/LM-12 Apollo 17 |
| Spacecraft at launch: | | | | | |
| Command and service modules | 63 812 | 64 464 | 66 955 | 67 010 | 66 953 |
| Lunar module | 33 502 | 33 652 | 36 222 | 36 255 | 36 279 |
| Spacecraft/lunar module adapter | 3 947 | 3 967 | 3 964 | 3 961 | 3 961 |
| Launch escape system | 8 991 | 9 037 | 9 108 | 9 167 | 9 104 |
| Total: | 110 252 | 111 120 | 116 249 | 116 393 | 116 297 |
| Spacecraft after lunar orbit insertion: | | | | | |
| Command and service modules | - | 38 174 | 40 109 | 41 395 | 40 264 |
| Lunar module | - | 33 649 | 36 220 | 36 252 | 36 276 |
| Total: | - | 71 823 | 76 329 | 77 647 | 76 540 |
| Lunar module at lunar landing: | | | | | |
| Ascent stage | - | 10 898 | 10 960 | 10 958 | 10 989 |
| Descent stage | - | 5 474 | 7 215 | 7 250 | 6 819 |
| Total: | - | 16 372 | 18 175 | 18 208 | 17 808 |
| Lunar module ascent stage at lunar lift-off | - | 10 780 | 10 915 | 10 958 | 11 005 |
| [b]Lunar module ascent stage at jettison | (c) | 5 307 | 5 325 | 5 306 | 5 277 |
| Command module at earth entry interface | 12 361 | 12 704 | 12 953 | 13 015 | 13 140 |
| Command module at landing | 11 133 | 11 481 | 11 731 | 11 995 | 12 120 |

[a]All weights are in pounds and include propellants and other expendables.

[b]Unmanned.

[c]The lunar module was docked to the command module until just prior to entry. At that time, the weight of the lunar module ascent and descent stages was 24 647 lb.

## APPENDIX D - MANNED SPACE FLIGHT RECORDS ESTABLISHED DURING THE APOLLO PROGRAM

The records listed in tables D-I, D-II, and D-III were obtained from the record dossiers of the National Aeronautic Association. The presently held records are officially recognized by the Federation Aeronautique Internationale (F.A.I.). Special conditions are that a record must be applied for in advance and must exceed the existing record by 10 percent for a new record to be established. For these reasons, not all of the Apollo performances were documented, even though better performances were attained in some cases. The English unit of measurement for distance in the tables is statute miles.

TABLE D-I.- ABSOLUTE WORLD RECORDS

| Record | Apollo mission | | | | | | | | |
|---|---|---|---|---|---|---|---|---|---|
| | 7 | 8 | 9 | 11 | 12 | 13 | 14 | 15 | 17 |
| [a]Altitude above surface of the earth, km (mi.) | | 377 668.9 (234 672.5) | | | | | | | |
| [b]Greatest mass lifted to altitude, kg (lb) | 14 769 (32 566) | 127 980 (282 197) | | | | | | | |
| [c]Total time outside spacecraft for one crewman, hr:min:sec | | | 00:47:01 Schweickart | 02:31:40 Armstrong | 07:37:52 Conrad | | 09:12:27 Shepard | 18:18:26 Scott | [d]21:49:24 Cernan |
| Accumulated space flight time, hr:min:sec | | 572:10:16 Lovell | | | | [e]715:04:57 Lovell | | | |

[a]Maximum difference in radii of geocentric spheres intercepted by vehicle.

[b]Includes mass of crew.

[c]Time spent outside spacecraft using an autonomous life support system. Time begins and ends at crossing of vehicle outline when exiting and entering the spacecraft.

[d]Consists of 17 min 40 sec using the astronaut maneuvering unit for life support during the Gemini IX-A mission and 21 hr 31 min 44 sec of lunar surface extravehicular activity during the Apollo 17 mission.

[e]Record subsequently surpassed by Skylab crews.

TABLE D-II.- WORLD CATEGORY RECORDS - ORBITAL MISSIONS (K-2) WITH TWO TO FOUR ASTRONAUTS

| Record | Apollo mission | | |
|---|---|---|---|
| | 7 | 8 | 9 |
| [a]Greatest mass lifted into earth orbit, kg (lb) | 14 769 (32 566) | 127 980 (282 197) | |
| [a,b]Greatest mass of vehicles in group flight while linked, kg (lb) | | | [d]28 429 (62 675) |
| [c]Duration in group flight, hr:min:sec | | | [e]26:32:59 |
| Duration in group flight while linked, hr:min:sec | | | [d]21:36:31 |
| Distance in group flight while linked, km (mi.) | | | [d]523 458 (325 318) |

[a]Includes mass of crew.

[b]With CSM and LM manned.

[c]Vehicles must remain within 100 kilometers of each other for at least one revolution.

[d]Record subsequently surpassed by Skylab crews.

[e]Record subsequently surpassed by U.S.S.R. (Soyuz 7 and 8) crews.

TABLE D-III.- WORLD CATEGORY RECORDS - LUNAR AND PLANETARY MISSIONS (K-3) WITH TWO TO FOUR ASTRONAUTS

| Record | Apollo mission | | | | | | | |
|---|---|---|---|---|---|---|---|---|
| | 8 | 10 | 11 | 12 | 14 | 15 | 16 | 17 |
| [a]Altitude above surface of the earth, km (mi.) | 377 668.9 (234 672.5) | | | | | | | |
| [b]Greatest mass placed into lunar orbit from the earth, kg (lb) | | 31 410 (69 429) | | | | 34 593 (76 278) | | |
| Duration of lunar mission, hr:min:sec | 147:00:42 | 192:03:23 | | 244:36:25 | | | | 301:51:57 |
| [c]Duration of stay in lunar orbit, hr:min:sec | 20:06:48 | 61:34:39 | 59:27:50 Collins | 88:56:01 Gordon | | | 125:46:50 Mattingly | 147:41:13 Evans |
| [b]Greatest mass landed on the moon, kg (lb) | | | 7 326.9 (16 153.0) | | | | 8 257.6 (18 208.0) | |
| [b]Greatest mass lifted to lunar orbit from lunar surface, kg (lb) | | | 2 689.2 (5 928.6) | 2 705.9 (5 965.6) | | | | |
| Duration of stay on lunar surface, hr:min:sec | | | 21:36:21 Armstrong Aldrin | 31:31:12 Conrad Bean | | | 71:02:13 Young Duke | |
| [d]Total time outside spacecraft for all crewmen while on lunar surface, hr:min:sec | | | | 14:02:25 Conrad Bean | 17:33:29 Shepard Mitchell | | 39:04:03 Young Duke | |
| [d]Total time outside spacecraft for one crewman while on lunar surface, hr:min:sec | | | 02:31:40 Armstrong | 07:37:37 Conrad | | 18:18:26 Scott | | 21:31:44 Cernan |
| [e]Distance traveled from spacecraft while on lunar surface, m (ft) | | | | | 1 454 (4 770) Shepard Mitchell | 5 020 (16 470) Scott Irwin | | 7 370 (24 180) Cernan Schmitt |

[a]Maximum difference in radii of geocentric spheres intercepted by vehicle.

[b]Includes mass of crew.

[c]Computed from termination of thrust for lunar orbit insertion to beginning of thrust for transearth injection.

[d]Time spent outside spacecraft using an autonomous life support system. Time begins and ends at crossing of vehicle outline when exiting and entering the spacecraft.

[e]Distance measured radially from spacecraft and along mean surface.

# APPENDIX E - FLIGHT SPACECRAFT CHECKOUT HISTORY

TABLE E-I.- BLOCK I FLIGHT COMMAND AND SERVICE MODULE CHECKOUT HISTORY

| Test/operation | Spacecraft/mission | | | | | |
|---|---|---|---|---|---|---|
| | CSM-002 A-004 | CSM-009 AS-201 | CSM-011 AS-202 | CSM-012 Apollo I | CSM-017 Apollo 4 | CSM-020 Apollo 6 |
| Factory | | | | | | |
| Individual and combined systems test completed | Sept. 3, 1965 | Sept. 19, 1965 | Mar. 1, 1966 | June 13, 1966 | [a]Nov. 27, 1966 | Oct. 10, 1967 |
| Integrated systems test completed | Sept. 30, 1965 | Oct. 19, 1965 | Apr. 2, 1966 | July 14, 1966 | Dec. 3, 1966 | Oct. 27, 1967 |
| Ready to ship: | | | | | | |
| Command module | Oct. 8, 1965 | Oct. 24, 1965 | Apr. 15, 1966 | Aug. 25, 1966 | Dec. 22, 1966 | Nov. 22, 1967 |
| Service module | Oct. 6, 1965 | Oct. 22, 1965 | Apr. 9, 1966 | Aug. 9, 1966 | Dec. 19, 1966 | Nov. 9, 1967 |
| [b]Launch Site | | | | | | |
| Delivered: | | | | | | |
| Command module | Oct. 10, 1965 | Oct. 26, 1965 | Apr. 18, 1966 | Aug. 26, 1966 | Dec. 24, 1966 | Nov. 23, 1967 |
| Service module | Oct. 7, 1965 | Oct 27, 1965 | Apr. 11, 1966 | Aug. 10, 1966 | Dec. 21, 1966 | (c) |
| [d]Command and service modules mated | Oct. 29, 1965 | Nov. 27, 1965 | May 11, 1966 | Aug. 29, 1966 | Dec. 28, 1966 | Dec. 5, 1967 |
| [d]Combined systems test completed | - | Dec. 6, 1965 | May 14, 1966 | Sept. 14, 1966 | (e) | - |
| [d]Altitude tests completed | - | Dec. 20, 1965 | June 11, 1966 | Nov. 29, 1966 | - | - |
| Command and service module moved to launch complex | Oct. 29, 1965 | Dec. 27, 1965 | July 2, 1966 | Jan. 6, 1967 | - | - |
| Command and service module moved to vehicle assembly building | - | - | - | - | June 20, 1967 | Dec. 8, 1967 |

TABLE E-I.- BLOCK I FLIGHT COMMAND AND SERVICE MODULE CHECKOUT HISTORY - Concluded

| Test/operation | Spacecraft/mission | | | | | |
|---|---|---|---|---|---|---|
| | CSM-002 A-004 | CSM-009 AS-201 | CSM-011 AS-202 | CSM-012 Apollo I | CSM-017 Apollo 4 | CSM-020 Apollo 6 |
| Command and service module integrated systems test completed | Nov. 8, 1965 | Jan. 18, 1966 | July 5, 1966 | Jan. 11, 1967 | June 28, 1967 | Dec. 30, 1967 |
| Command and service module electrically mated to launch vehicle | Nov. 19, 1965 | Jan. 19, 1966 | July 21, 1966 | (c) | July 23, 1967 | Jan. 12, 1968 |
| Overall test completed | [f]Nov. 22, 1965 | Feb. 2, 1966 | July 24, 1966 | [g]Jan. 27, 1967 | Aug. 2, 1967 | Jan. 24, 1968 |
| Assembled space vehicle moved to launch complex | - | - | - | - | Aug. 24, 1967 | Feb. 5, 1968 |
| Flight readiness test completed | Jan 13, 1966 | Feb. 13, 1966 | Aug. 9, 1966 | - | Oct. 24, 1967 | Mar. 12, 1968 |
| Countdown demonstration test completed | - | Feb. 10, 1966 | July 29, 1966 | - | Sept. 27, 1967 | Mar. 31, 1968 |
| Final phase of countdown and launch | Jan. 20, 1966 | Feb. 26, 1966 | Aug. 25, 1966 | - | Nov. 9, 1967 | Apr. 4, 1968 |

[a]SM-017 was destroyed during testing on 10/25/66. The service module was replaced with SM-020, and SM-014 was assigned for use with CM-020.

[b]CSM-002 launched from White Sands Missile Range, New Mexico. All other flight command and service modules launched from Air Force Eastern Test Range or Kennedy Space Center.

[c]Data not available.

[d]Conducted in Operations and Checkout Building.

[e]No testing in the Operations and Checkout Building was planned for CSM-017 and CSM-020; however, because of the Apollo I fire, an integrated systems test was performed on CSM-017 in the Operations and Checkout Building, after which modifications were made. CSM-017 was then moved to the vehicle assembly building and the scheduled checkout was resumed.

[f]Interface/integrated test.

[g]Spacecraft destroyed by fire on January 27, 1967, during "plugs out" portion of overall test.

TABLE E-II.- BLOCK II FLIGHT COMMAND AND SERVICE MODULE CHECKOUT HISTORY
(Apollo 7 through Apollo 12)

| Test/operation | Spacecraft/mission | | | | | |
|---|---|---|---|---|---|---|
| | CSM-101 Apollo 7 | CSM-103 Apollo 8 | CSM-104 Apollo 9 | CSM-106 Apollo 10 | CSM-107 Apollo 11 | CSM-108 Apollo 12 |
| Factory | | | | | | |
| Individual and combined systems test completed | Mar. 18, 1968 | June 2, 1968 | July 20, 1968 | Sept. 8, 1968 | Oct. 12, 1968 | Jan. 20, 1969 |
| Integrated systems test completed | Apr. 29, 1968 | July 21, 1968 | Aug. 31, 1968 | Oct. 19, 1968 | Dec. 6, 1968 | Feb. 3, 1969 |
| Ready to ship | May 29, 1968 | Aug. 11, 1968 | Oct. 5, 1968 | Nov. 24, 1968 | Jan. 22, 1969 | Mar. 27, 1969 |
| Kennedy Space Center | | | | | | |
| Delivered | May 30, 1968 | Aug. 12, 1968 | Oct. 6, 1968 | Nov. 25, 1968 | Jan. 23, 1969 | Mar. 28, 1969 |
| [a]Command and service modules mated | June 11, 1968 | Aug. 22, 1968 | Oct. 8, 1968 | Nov. 26, 1968 | Jan. 29, 1969 | Apr. 2, 1969 |
| [a]Combined systems test completed | June 19, 1968 | Aug. 27, 1968 | Oct. 24, 1968 | Dec. 16, 1968 | Feb. 17, 1969 | Apr. 21, 1969 |
| [a]Altitude tests completed | July 29, 1968 | Sept. 22, 1968 | Nov. 18, 1968 | Jan. 17, 1969 | Mar. 24, 1969 | June 9, 1969 |
| Command and service module moved to launch complex 34 | Aug. 9, 1968 | - | - | - | - | - |
| Command and service module moved to vehicle assembly building | - | Oct. 7, 1968 | Dec. 3, 1968 | Feb. 6, 1969 | Apr. 14, 1969 | June 30, 1969 |
| Assembled space vehicle moved to launch complex 39 | - | Oct. 9, 1968 | Jan. 3, 1969 | Mar. 11, 1969 | May 20, 1969 | Sept. 8, 1969 |

TABLE E-II.- BLOCK II FLIGHT COMMAND AND SERVICE MODULE CHECKOUT HISTORY - Continued
(Apollo 7 through Apollo 12)

| Test/operation | Spacecraft/mission | | | | | |
|---|---|---|---|---|---|---|
| | CSM-101 Apollo 7 | CSM-103 Apollo 8 | CSM-104 Apollo 9 | CSM-106 Apollo 10 | CSM-107 Apollo 11 | CSM-108 Apollo 12 |
| [b]Command and service module integrated systems test completed | Aug. 27, 1968 | Nov. 2, 1968 | Dec. 11, 1968 | Feb. 13, 1969 | Apr. 22, 1969 | July 7, 1969 |
| [b]Command and service module electrically mated to launch vehicle | Aug. 30, 1968 | Nov. 4, 1968 | Dec. 26, 1968 | Feb. 27, 1969 | May 5, 1969 | July 16, 1969 |
| [b]Overall test completed | Sept. 4, 1968 | Nov. 6, 1968 | Dec. 27, 1968 | Mar. 3, 1969 | May 6, 1969 | July 17, 1969 |
| Flight readiness test completed | Sept. 25, 1968 | Nov. 11, 1968 | Jan. 18, 1969 | Apr. 7, 1969 | June 1, 1969 | Sept. 29, 1969 |
| Countdown demonstration test completed | Sept. 17, 1968 | Dec. 5, 1968 | Feb. 12, 1969 | Apr. 29, 1969 | June 26, 1969 | Oct. 23, 1969 |
| Final phase of countdown and launch | Oct. 11, 1968 | Dec. 21, 1968 | Mar. 3, 1969 | May 18, 1969 | July 16, 1969 | Nov. 14, 1969 |

[a]Performed in Operations and Checkout Building (renamed Manned Spacecraft Operations Building).

[b]Integrated systems test, electrical mate and overall test were conducted in the vehicle assembly building on the Apollo 9, 10, 11 and 12 vehicles. These operations were conducted at the launch site on the Apollo 7, 8, 13, 14, 15, 16 and 17 vehicles.

TABLE E-II.- BLOCK II FLIGHT COMMAND AND SERVICE MODULE CHECKOUT HISTORY - Continued
(Apollo 13 through Apollo 17)

| Test/operation | Spacecraft/mission | | | | |
|---|---|---|---|---|---|
| | CSM-109 Apollo 13 | CSM-110 Apollo 14 | CSM-112 Apollo 15 | CSM-113 Apollo 16 | CSM-114 Apollo 17 |
| Factory | | | | | |
| Individual and combined systems test completed | Mar. 16, 1969 | Apr. 2, 1969 | [c]Nov. 5, 1969 | [c]Dec. 3, 1970 | May 8, 1971 |
| Integrated systems test completed | Apr. 8, 1969 | May 7, 1969 | Nov. 24, 1970 | Mar. 17, 1971 | [d]Aug. 2, 1971 |
| Ready to ship | June 25, 1969 | Nov. 17, 1969 | Jan. 11, 1971 | July 26, 1971 | Mar. 17, 1972 |
| Kennedy Space Center | | | | | |
| Delivered | June 25, 1969 | Nov. 19, 1969 | Jan. 14, 1971 | Aug. 1, 1971 | Mar. 24, 1972 |
| [a]Command and service modules mated | June 30, 1969 | Nov. 24, 1969 | Jan. 18, 1971 | Aug. 2, 1971 | Mar. 28, 1972 |
| [a]Combined systems test completed | July 7, 1969 | Feb. 2, 1970 | Mar. 8, 1971 | Sept. 13, 1971 | May 9, 1972 |
| [a]Altitude tests completed | Sept. 12, 1969 | [e]Sept. 1, 1970 | Apr. 9, 1971 | Oct. 21, 1971 | June 19, 1972 |
| Command and service module moved to vehicle assembly building | Dec. 9, 1969 | Nov. 4, 1970 | May 8, 1971 | Dec. 7, 1971 | Aug. 22, 1972 |
| Assembled space vehicle moved to launch complex 39 | Dec. 14, 1969 | Nov. 9, 1970 | May 10, 1971 | Dec. 13, 1971 | Aug. 28, 1972 |
| [b]Command and service module integrated test completed | Jan. 5, 1970 | Nov. 18, 1970 | May 18, 1971 | [f]Jan. 3, 1972 | Sept. 11, 1972 |

TABLE E-II.- BLOCK II FLIGHT COMMAND AND SERVICE MODULE CHECKOUT HISTORY - Concluded
(Apollo 13 through Apollo 17)

| Test/operation | Spacecraft/mission | | | | |
|---|---|---|---|---|---|
| | CSM-109 Apollo 13 | CSM-110 Apollo 14 | CSM-112 Apollo 15 | CSM-113 Apollo 16 | CSM-114 Apollo 17 |
| [b]Command and service module electrically mated to launch vehicle | Jan. 18, 1970 | Dec. 13, 1970 | June 7, 1971 | Feb. 21, 1972 | Oct. 11, 1972 |
| [b]Overall test completed | Jan. 19, 1970 | Dec. 14, 1970 | June 7, 1971 | Feb. 22, 1972 | Oct. 17, 1972 |
| Flight readiness test completed | Jan. 25, 1970 | Dec. 16, 1970 | June 13, 1971 | Feb. 29, 1972 | Oct. 19, 1972 |
| Countdown demonstration test completed | Mar. 18, 1970 | Jan. 12, 1971 | July 7, 1971 | Mar. 27, 1972 | Nov. 15, 1972 |
| Final phase of countdown and launch | Apr. 11, 1970 | Jan. 31, 1971 | July 26, 1971 | Apr. 16, 1972 | Dec. 7, 1972 |

[a]Performed in Operations and Checkout Building (renamed Manned Spacecraft Operations Building).

[b]Integrated systems test, electrical mate and overall test were conducted in the vehicle assembly building on the Apollo 9, 10, 11 and 12 vehicles. These operations were conducted at the launch site on the Apollo 7, 8, 13, 14, 15, 16 and 17 vehicles.

[c]J-mission modifications and retest were accomplished prior to integrated systems test.

[d]Command and service modules stored at factory for approximately two months prior to shipment.

[e]Cryogenic system modifications and retest performed after altitude test.

[f]Following integrated test, the Apollo 16 spacecraft was moved back to the Manned Spacecraft Operations Building for replacement of a command module reaction control system propellant tank and modification of the docking ring. The spacecraft was then reinstalled on the launch vehicle in the vehicle assembly building and the stack was moved to the launch pad on 2/8/72. Retest was conducted 2/14/72.

TABLE E-III.- FLIGHT LUNAR MODULE CHECKOUT HISTORY
(Apollo 5 through Apollo 12)

| Test/operation | Spacecraft/mission | | | | |
|---|---|---|---|---|---|
| | [a]LM-1 Apollo 5 | LM-3 Apollo 9 | LM-4 Apollo 10 | LM-5 Apollo 11 | LM-6 Apollo 12 |
| **Factory** | | | | | |
| Integrated test | Mar. 10, 1967 | Jan. 31, 1968 | May 25, 1968 | Oct. 21, 1968 | Dec. 31, 1968 |
| Final engineering evaluation acceptance test | June 14, 1967 | May 17, 1968 | Oct. 2, 1968 | Dec. 13, 1968 | Feb. 18, 1969 |
| Ready to ship: | | | | | |
| Ascent stage | June 21, 1967 | June 12, 1968 | Oct. 12, 1968 | Jan. 7, 1969 | Mar. 23, 1969 |
| Descent stage | June 21, 1967 | June 4, 1968 | Oct. 9, 1968 | Jan. 11, 1969 | Mar. 22, 1969 |
| **Kennedy Space Center** | | | | | |
| Delivered: | | | | | |
| Ascent stage | June 23, 1967 | June 14, 1968 | Oct. 16, 1968 | Jan. 8, 1969 | Mar. 24, 1969 |
| Descent stage | June 23, 1967 | June 9, 1968 | Oct. 11, 1968 | Jan. 12, 1969 | Mar. 24, 1969 |
| [b]Ascent and descent stages mated | July 13, 1967 | June 30, 1968 | Nov. 2, 1968 | Feb. 14, 1969 | Apr. 28, 1969 |
| [b]Combined systems test completed | July 30, 1967 | July 1, 1968 | Nov. 6, 1968 | Feb. 17, 1969 | May 1, 1969 |
| [b]Altitude tests completed | - | Sept. 27, 1968 | Dec. 6, 1968 | Mar. 25, 1969 | June 16, 1969 |
| Lunar module moved to launch complex 37 | Nov. 20, 1967 | - | - | - | - |
| Spacecraft moved to vehicle assembly building | - | Dec. 3, 1968 | Feb. 6, 1969 | Apr. 14, 1969 | June 20, 1969 |
| Assembled space vehicle moved to launch complex 39 | - | Jan. 3, 1969 | Mar. 11, 1969 | May 20, 1969 | Sept. 8, 1969 |
| Lunar module combined systems test completed | (c) | [d]Dec. 7, 1968 | [d]Feb. 10, 1969 | [d]Apr. 18, 1969 | [d]July 5, 1969 |
| Flight readiness test completed | Dec. 22, 1967 | Jan. 19, 1969 | Mar. 27, 1969 | June 2, 1969 | Sept. 18, 1969 |
| Countdown demonstration test completed | Jan. 18, 1968 | Feb. 12, 1969 | Apr. 29, 1969 | June 26, 1969 | Oct. 23, 1969 |
| Final phase of countdown and launch | Jan. 22, 1968 | Mar. 3, 1969 | May 18, 1969 | July 16, 1969 | Nov. 14, 1969 |

[a]LM-1 was the only unmanned flight lunar module.

[b]Operations were performed in the Operations and Checkout Building (renamed Manned Spacecraft Operations Building).

[c]Apollo 5 launch pad tests prior to flight readiness test consisted of lunar module integrated systems test, simulated mission, and overall tests 1 and 2.

[d]Tests were conducted in vehicle assembly building.

TABLE E-III.- FLIGHT LUNAR MODULE CHECKOUT HISTORY - Concluded
(Apollo 13 through Apollo 17)

| Test/operation | Spacecraft/mission | | | | |
|---|---|---|---|---|---|
| | LM-7 Apollo 13 | LM-8 Apollo 14 | LM-10 Apollo 15 | LM-11 Apollo 16 | LM-12 Apollo 17 |
| **Factory** | | | | | |
| Integrated test | (e) | (e) | (e) | (e) | (e) |
| Final engineering evaluation acceptance test | May 18, 1969 | Aug. 25, 1969 | Sept. 21, 1970 | Feb. 24, 1971 | May 23, 1971 |
| Ready to ship: | | | | | |
| Ascent stage | June 24, 1969 | Nov. 8, 1969 | Nov. 4, 1970 | May 7, 1971 | June 14, 1971 |
| Descent stage | June 25, 1969 | Nov. 13, 1969 | Nov. 16, 1970 | May 1, 1971 | June 14, 1971 |
| **Kennedy Space Center** | | | | | |
| Delivered: | | | | | |
| Ascent stage | June 27, 1969 | Nov. 24, 1969 | Nov. 6, 1970 | May 14, 1971 | Mar. 12, 1972 |
| Descent stage | June 28, 1969 | Nov. 24, 1969 | Nov. 16, 1970 | May 6, 1971 | Mar. 12, 1972 |
| [b]Ascent and descent stages mated | July 15, 1969 | Jan. 20, 1970 | Feb. 9, 1971 | (f) | May 18, 1972 |
| [b]Combined systems test completed | July 22, 1969 | Jan. 22, 1970 | Feb. 12, 1971 | (f) | June 7, 1972 |
| [b]Altitude tests completed | Sept. 20, 1969 | June 22, 1970 | Apr. 6, 1971 | Oct. 19, 1971 | July 25, 1972 |
| Spacecraft moved to vehicle assembly building | Dec. 10, 1969 | Nov. 4, 1970 | May 8, 1971 | Dec. 8, 1971 | Aug. 24, 1972 |
| Assembled space vehicle moved to launch complex 39 | Dec. 15, 1969 | Nov. 9, 1970 | May 11, 1971 | Dec. 13, 1971 | Aug. 28, 1972 |
| Lunar module combined systems test completed | Jan. 5, 1970 | Nov. 16, 1970 | May 17, 1971 | [g]Jan. 4, 1972 | Sept. 6, 1972 |
| Flight readiness test completed | Feb. 24, 1970 | Dec. 14, 1970 | June 10, 1971 | Feb. 24, 1972 | Oct. 4, 1972 |
| Countdown demonstration test completed | Mar. 18, 1970 | Jan. 12, 1971 | July 8, 1971 | Mar. 27, 1972 | Nov. 15, 1972 |
| Final phase of countdown and launch | Apr. 11, 1970 | Jan. 31, 1971 | July 26, 1971 | Apr. 16, 1972 | Dec. 7, 1972 |

[a]LM-1 was the only unmanned flight lunar module.

[b]Operations were performed in the Operations and Checkout Building (renamed Manned Spacecraft Operations Building).

[c]Apollo 5 launch pad tests prior to flight readiness test consisted of lunar module integrated systems test, simulated mission, and overall tests 1 and 2.

[d]Tests were conducted in vehicle assembly building.

[e]Integrated test combined with final engineering evaluation acceptance test.

[f]Data not available.

[g]The Apollo 16 spacecraft was moved back to the Manned Spacecraft Operations Building after combined systems test for command module modifications. The spacecraft was reinstalled on the launch vehicle in the vehicle assembly building and the stack was moved back to the launch pad on 2/8/72.

E-10

# APPENDIX F - FLIGHT ANOMALIES

This appendix contains abbreviated descriptions of significant spacecraft systems malfunctions as well as other flight hardware problems that were termed "anomalies" and are discussed in the anomaly sections of the Apollo 4 through Apollo 17 Mission Reports. The lists consist of problems which occurred or were noted during flight and, in some cases, after flight. In addition to the statement of the problem, the causes and corrective actions are briefly described. In general, the anomalies pertain to the spacecraft (CSM, LM, and SLA), government-furnished equipment used by the crews (GFE), lunar surface experiments (ALSEP), lunar orbital experiments (SIM), and the lunar roving vehicles (LRV). In cases where the same problem or a closely related problem occurred on more than one mission, the appropriate missions are identified. The reference given for each anomaly is the applicable Mission Report. When more than one reference is given, the additional references are applicable Anomaly Reports that were published for anomalies that were not completely resolved at the time of Mission Report publication.

APOLLO 4

| Anomaly No. | Anomaly Statement | Vehicle/ Equipment | Cause | Corrective Action | Missions | References |
|---|---|---|---|---|---|---|
| 1 | Instrumentation 5-Vdc reference voltage decreased after CM/SM separation. | CSM-011<br>CSM-017 | CM/SM separation monitor burns off during entry and wiring is exposed to entry plasma. Arcing did not blow fuse because of wrong fuse size and errors in wiring. | Fuse box wiring errors corrected and inspection procedures changed. | AS-202<br>Apollo 4 | MSC-PA-R-68-1<br>MSC-PT-R-67-4<br>(Rev. A) |
| 2 | Holes in CM aft heat shield ablator. | CSM-017 | Manufacturing and quality deficiency at vendor. | X-rays taken after heat shields completed. | Apollo 4 | MSC-PA-R-68-1<br>MSC-PT-R-67-3 |
| 3 | Real-time command (RTC) 13 was not transmitted. | MSFN | Operations procedural error - command executed before verification received from previous command. | None. | Apollo 4 | MSC-PA-R-68-1<br>MSC-PT-R-67-10 |
| 4 | Pyrotechnic battery voltages did not return to open-circuit level. | CSM-017 | Leakage current of pyrotechnic initiators after firing. | None required. | Apollo 4 | MSC-PA-68-1<br>MSC-PT-R-67-13 |
| 5 | CM VHF recovery antenna failed to lock into position. | CSM-017 | Marginal deployment spring. | None. | Apollo 4 | MSC-PA-R-68-1<br>MSC-PT-R-67-6 |
| 6 | Guam lost S-band downlink signal at CM/SM separation. | MSFN | Signal perturbations by RCS thruster plumes and improper reacquisition procedure. | Acquisition data handling procedures reviewed to insure correct data in the antenna position programmer. | Apollo 4 | MSC-PA-R-68-1<br>MSC-PT-R-68-1 |
| 7 | CSM S-band receiver lost lock. | CSM-017 | Nulls in spacecraft antenna pattern. | None. | Apollo 4 | MSC-PA-R-68-1<br>MSC-PT-R-68-4 |
| 8 | SPS shutdown was late during second firing. | CSM-017 | Data delays due to instrumentation, transmission and processing were greater than expected. | Procedures and mission rules changed. | Apollo 4 | MSC-PA-R-68-1<br>MSC-PT-R-68-3 |
| 9 | State vector update commands not accepted by spacecraft. | MSFN | Poor alignment of updata buffer at ground station caused distortion of transmitted signal. | Signal characteristics incorporated into performance and interface specs. | Apollo 4 | MSC-PA-R-68-1<br>MSC-PT-R-68-10 |
| 10 | Spacecraft internal heat load was lower than predicted, resulting in lower-than-expected evaporator inlet and outlet temperatures and steam back pressure. | CSM-017 | Heat loads were within predictive capability. | Evaporator back pressure control valve setting for Apollo 6 based on updated predictions. Block II design and manual control capability eliminates problem on manned vehicles. | Apollo 4 | MSC-PA-R-68-1<br>MSC-PT-R-68-5 |
| 11 | Interference between apex cover and RCS engines. | CSM-017 | At apex cover jettison, lower lip of apex cover caught on lower left corner of engine mounting panel. | Clearance increased for Apollo 6; block II configuration has adequate clearance. | Apollo 4 | MSC-PA-R-68-1<br>MSC-PT-R-67-14 |
| 12 | Damage to recovered main parachute. | CSM-017 | RCS oxidizer dump during landing sequence. | Oxidizer quantity decreased and/or landing with propellants on board. | Apollo 4<br>Apollo 15<br>Apollo 16 | MSC-PA-R-68-1<br>MSC-PT-R-68-9<br>(Rev. A) |
| 13 | Foreign material in cabin pressure relief valve. | CSM-017 | H-film ingested during entry. | None required. | Apollo 4 | MSC-PT-R-68-11 |

APOLLO 5

| Anomaly No. | Anomaly Statement | Vehicle/ Equipment | Cause | Corrective Action | Missions | References |
|---|---|---|---|---|---|---|
| 1 | Premature shutdown of first descent engine firing. | LM-1 | Slower-than-normal thrust buildup caused by start at less than full tank pressure. | None. | Apollo 5 | MSC-PA-R-68-7<br>MSC-PT-R-68-13 |
| 2 | Abrupt change in cabin pressure leak rate. | LM-1 | Unknown. | None. | Apollo 5 | MSC-PA-R-68-7 |
| 3 | Out-of-phase indication from descent engine propellant shutoff valves. | LM-1 | Possible open or shorted circuit causing shutoff ball valve to close, or possible reed switch malfunction. | Valve packages replaced on Apollo 9 and 10 lunar modules, improved manufacturing techniques, and added emphasis on quality control. | Apollo 5 | MSC-PA-R-68-7<br>MSC-PT-R-69-2 |
| 4 | Abrupt changes in spacecraft-received UHF signal strength. | LM-1 | Intermittent operation of RF stage of the digital command assembly or the coaxial cable connecting the diplexer to the digital command assembly. | New acceptance vibration test levels (planned prior to LM-1 mission). | Apollo 5 | MSC-PA-R-68-7<br>MSC-PT-R-68-15<br>(Report no. 5) |
| 5 | Excessive control engine propellant usage (items 6, 7, 8 and 9 are related). | LM-1 | Incorrect configuration of PGNCS digital autopilot after staging. Calculations for thruster "on" time used combined descent/ascent stage inertia constants after descent stage separation. | None required. | Apollo 5 | MSC-PA-R-68-7<br>MSC-PT-R-68-15<br>(Report no. 4) |
| 6 | Discrepant propellant manifold pressure indications. | LM-1 | Fuel depletion was obscurred by the effects of bladder leakage and the manifold pressure sensor sensing helium pressure. | None. | Apollo 5 | MSC-PA-R-68-7<br>MSC-PT-R-68-15<br>(Report no. 4) |
| 7 | System A oxidizer shutoff valve unlatched from open position without command. | LM-1 | Power was inadvertently applied to the valve close coil for 51 minutes, raising its temperature to 325° F. Subsequent valve opening, vaporization of oxidizer trapped above upper magnet in valve, and crossfeed opening pressure drop unlatched the valve. | None. | Apollo 5 | MSC-PA-R-68-7<br>MSC-PT-R-68-15<br>(Report no. 4) |
| 8 | Thrust chamber of upfiring engine in cluster 4 failed. | LM-1 | Excessive thruster activity resulted in operation with low oxidizer manifold pressure and with helium/fuel mixture in fuel manifold. (This condition causes accumulation of explosive residue in combustion chamber.) | None. | Apollo 5 | MSC-PA-R-68-7<br>MSC-PT-R-68-15<br>(Report no. 4) |
| 9 | High engine cluster temperatures. | LM-1 | Excessive control engine activity (see item 5). | None. | Apollo 5 | MSC-PA-R-68-7 |
| 10 | Descent stage fiberglass thermal shield failed. | LM-1 | High temperature indications from sensors beneath thermal shield at abort staging were probably caused by thermal shield failure. | | Apollo 5 | MSC-PA-R-68-7 |
| 11 | No indication of adapter panel deployment. | SLA | Panels deployed but no indication was received from limit switches. Cause unknown. | None required (system not used on manned flights). | Apollo 5 | MSC-PA-R-68-7 |
| 12 | Separation distance monitors did not function during abort staging. | LM-1 | Unknown. | None required (not used on manned flights). | Apollo 5 | MSC-PA-R-68-7 |

APOLLO 5

| Anomaly No. | Anomaly Statement | Vehicle/ Equipment | Cause | Corrective Action | Missions | References |
|---|---|---|---|---|---|---|
| 13 | Five pressure and temperature sensors failed during abort staging. | LM-1 | Unknown. | None. | Apollo 5 | MSC-PA-R-68-7 |
| 14 | Rendezvous radar antenna vibration measurement was intermittent. | LM-1 | Possible failure of transducer signal wires. | None. | Apollo 5 | MSC-PA-R-68-7 |

APOLLO 6

| Anomaly No. | Anomaly Statement | Vehicle/ Equipment | Cause | Corrective Action | Missions | References |
|---|---|---|---|---|---|---|
| 1 | An a-c essential electrical load transfer occurred. | CSM-020 | Short in cryogenic tank 1 fan circuit. | None required. Fans redesigned for Block II vehicles. | Apollo 6 | MSC-PA-R-68-9<br>MSC-PT-R-68-23 |
| 2 | Erratic data. | CSM-020 | Corona discharge of 3000-volt dc potential of VAC-ION pumps. | VAC-ION pumps disabled on Apollo 7, 8 and 9. Pumps redesigned for Apollo 10 and subsequent. | Apollo 6 | MSC-PA-R-68-9<br>MSC-PT-R-68-36 |
| 3 | Computer update rejections. | CSM-020 | Noise pulses impressed on service module umbilical, probably because of inadequate shielding. | Multi-point grounding used on shields for Block II spacecraft. Uplink blocked on Apollo 7 when not updating. Relay to preclude noise transmission added to spacecraft for Apollo 9 and subsequent. | Apollo 6 | MSC-PA-R-68-9<br>MSC-PT-R-68-40 |
| 4 | Excessive cabin-to-ambient differential pressure. | CSM-020 | No vent hole through boost protective cover at steam duct outlet. | Mandatory inspection points established to assure proper manufacturing and alignment. | Apollo 6 | MSC-PA-R-68-9<br>MSC-PT-R-68-41 |
| 5 | Oxygen surge tank pressure varied abnormally. | CSM-020 | One or both oxygen check valves did not seat properly. | Spring added to assure proper seating at low differential pressure. | Apollo 6 | MSC-PA-R-68-9<br>MSC-PT-R-68-31 |
| 6 | Abnormal structural performance during launch phase. | SLA | Facesheet bond too weak for internal panel pressures achieved. | Cork covering added to reduce temperature and internal pressure. Panels vented to ambient. Inspection and quality control procedures changed to verify sound construction. | Apollo 6 | MSC-PA-R-68-9<br>MSC-PT-R-68-22 |
| 7 | VHF recovery beacon or survival beacon signal not received by ARIA. | CSM-020 | Postflight analysis showed that survival beacon signal was not received. Cause unknown. | None required. | Apollo 6 | MSC-PA-R-68-9<br>MSC-PT-R-68-26 |
| 8 | Dosimeter measurements erratic. | CSM-020 | Electrical noise on dosimeter output lines. | None required. | Apollo 6 | MSC-PA-R-68-9<br>MSC-PT-R-68-32 |
| 9 | Propellant valves cross-wired. | CSM-020 | Wiring to yaw engines was reversed at terminal boards during engine installation. | Functional tests performed on spacecraft for Apollo 7, 8 and 9. Identification sleeving added on subsequent spacecraft in addition to functional tests. | Apollo 6 | MSC-PA-R-68-9<br>MSC-PT-R-68-29 |

APOLLO 6

| Anomaly No. | Anomaly Statement | Vehicle/ Equipment | Cause | Corrective Action | Missions | References |
|---|---|---|---|---|---|---|
| 10 | Low temperature excursions indicated for service module quad C injector. | CSM-020 | Probable faulty connection to transducer. | None required. | Apollo 6 | MSC-PA-R-68-9<br>MSC-PT-R-68-37 |
| 11 | CSM/S-IVB separation transient. | CSM-020 | Damage to SLA during boost (see item 6). | None required. | Apollo 6 | MSC-PA-R-68-9<br>MSC-PT-R-68-22 |
| 12 | One auxiliary battery had low voltage under load and four other batteries had internal shorts postflight. | CSM-020 | Overcharging of batteries prior to flight. | Charging procedures revised. Separator material changed for batteries to be used on Apollo 9 and subsequent. | Apollo 6 | MSC-PA-R-68-9<br>MSC-PT-R-68-30 |
| 13 | Damaged wires in CM/SM umbilical found postflight. | CSM-020 | Wires damaged during installation of umbilical - none associated with flight anomaly. | None required. Block II configuration precludes problem. | Apollo 6 | MSC-PT-R-68-28 |

APOLLO 7

| Anomaly No. | Anomaly Statement | Vehicle/ Equipment | Cause | Corrective Action | Missions | References |
|---|---|---|---|---|---|---|
| 1 | PCM and voice subcarriers lost on secondary S-band transponder. | CSM-101 | No abnormalities found postflight; problem may have been caused by improper switching of transponder select switch. | None required. | Apollo 7 | MSC-PA-R-68-15 |
| 2 | Biomedical instrumentation leads broken. | CSM-101 | Harness and potting not sufficiently flexible. | Wiring insulation changed from Teflon to polyvinyl chloride and softer potting material used. | Apollo 7 | MSC-PA-R-68-15 |
| 3 | Trigger on water gun stuck. | CSM-101 | O-ring swelling caused by sodium hypochlorite in drinking water. | O-ring material changed to ethylene propylene. | Apollo 7 | MSC-PA-R-68-15 |
| 4 | Attitude displayed on FDAI shifted in pitch axis when source switched from G and N to S and C. | CSM-101 | Solder ball found in relay may have caused the condition. | All relays involved in critical switching functions were made redundant. | Apollo 7 | MSC-PA-R-68-15 |
| 5 | Rotation hand controller failed momentarily. | CSM-101 | Anomaly could not be reproproduced postflight; symptoms indicated breakout switch temporarily failed to open when controller was returned within the detent. | None required. Improved design used for Apollo 8 and subsequent. | Apollo 7 | MSC-PA-R-68-15 |
| 6 | Entry monitor system malfunctions. | CSM-101 | Quality control problems. | Manufacturing and test procedures improved. | Apollo 7<br>Apollo 8<br>Apollo 9<br>Apollo 10<br>Apollo 11 | MSC-PA-R-68-15<br>MSC-02417 |
| 7 | Adapter panel not fully deployed. | SLA | Panel fully deployed initially, but rebounded because retention cable was caught in channel. Retention cable was later released and panel was retained fully deployed. | None required. Panels jettisoned on Apollo 8 and subsequent. | Apollo 7 | MSC-PA-R-68-15 |
| 8 | Windows fogged. | CSM-101 | Outgassing of silicone oils from RTV sealing material. | Parts using RTV material precured in vacuum at elevated temperatures, effective on Apollo 9. | Apollo 7<br>Apollo 8<br>Apollo 12 | MSC-PA-R-68-15<br>MSC-PT-R-69-1 |

APOLLO 7

| Anomaly No. | Anomaly Statement | Vehicle/ Equipment | Cause | Corrective Action | Missions | References |
|---|---|---|---|---|---|---|
| 9 | Flight qualification commutator failed. | CSM-101 | Probable internal failure of timing sequence logic circuit. | None required. Only other use on Apollo 9 lunar module and failure would not prevent satisfying mission objectives. | Apollo 7 | MSC-PA-R-68-15<br>MSC-PT-R-69-7 |
| 10 | Water leak near waste water disconnect. | CSM-101 | Poor metal-on-metal seal at B-nut connection. | O-ring seal used, effective with Apollo 8. | Apollo 7 | MSC-PA-R-68-15 |
| 11 | Momentary loss of a-c busses. | CSM-101 | Overvoltage caused by corona arcing of a-c power within motor-operated cryogenic fan switch. | Manual switching of fans used in order to bypass SM motor-operated switches. | Apollo 7 | MSC-PA-R-68-15 |
| 12 | Unexpected low charge rate on batteries A and B. | CSM-101 | Line resistance not considered in predictions. | Individual charger characteristics with associated spacecraft wiring will be checked. | Apollo 7 | MSC-PA-R-68-15 |
| 13 | Undervoltage indications on d-c busses A and B. | CSM-101 | Condition resulted from mid-range state of battery charge and low temperature. | Batteries warmed by placing them on main busses 12 minutes prior to CM/SM separation. Fuel cell 2 removed from busses and SPS gimbal motors turned on to lessen transient loads at separation. | Apollo 7 | MSC-PA-R-68-15 |
| 14 | Condenser exit temperature of fuel cell increased. | CSM-101 | Secondary bypass valves operated erratically because of contaminants. | Radiator half of Apollo 8 cooling system flushed. Studies made to determine if modification necessary. | Apollo 7<br>Apollo 8<br>Apollo 9<br>Apollo 10<br>Apollo 11 | MSC-PA-R-68-15 |
| 15 | Propellant isolation valves open with voltage removed. | CSM-101 | Valves were in closed position when system was activated. Bellows was damaged from hydraulic hammering. | Proper procedure included in crew checklist AOH and briefings. | Apollo 7<br>Apollo 12 | MSC-PA-R-68-15 |
| 16 | Voice communications garbled during launch phase. | MSFN | Improper procedures used at ground stations. | Procedures changed so that patching of voice to MCC accomplished only at Goddard. | Apollo 7 | MSC-PA-R-68-15 |
| 17 | Primary evaporator operated erratically in the automatic mode. | CSM-101 | Low, variable heat loads. | Sensor response to wick increased by relocation of sensors and removal of sponge material in sensor areas for Apollo 10 and subsequent spacecraft. | Apollo 7 | MSC-PA-R-68-15 |
| 18 | Condensation in cabin. | CSM-101 | Condition expected because of uninsulated coolant lines. | Lines insulated on Apollo 10 and subsequent spacecraft. | Apollo 7 | MSC-PA-R-68-15 |
| 19 | Food bags split and food crumbled. | GFE | Bag quality problems and menu choice. | Menu changed and bags inspected for defects. | Apollo 7 | MSC-PA-R-68-15 |
| 20 | Entry battery manifold leak. | CSM-101 | Cause not determined; probable under-torqued B-nuts as experienced on 2TV-1. | Check B-nut torques. | Apollo 7 | MSC-PA-R-68-15 |
| 21 | Both primary lamps failed in lower equipment bay floodlights. | CSM-101 | Excessive operation with lights dimmed prior to flight caused cathodes to degrade prematurely. | Procedures changed to limit preflight use. | Apollo 7<br>Apollo 9 | MSC-PA-R-68-15 |

APOLLO 7

| Anomaly No. | Anomaly Statement | Vehicle/ Equipment | Cause | Corrective Action | Missions | References |
|---|---|---|---|---|---|---|
| 22 | Face glass on mission timers cracked. | CSM-101 | Cracks probably resulted from propagation of hairline cracks introduced during bonding of glass to frame. | Manufacturing procedures revised. | Apollo 7<br>Apollo 12 | MSC-PA-R-68-15<br>MSC-PT-R-69-4 |
| 23 | Water in docking tunnel after landing. | CSM-101 | Interim ball check valve installed in top hatch leaked. | None. Used for Apollo 7 only. | Apollo 7 | MSC-PA-R-68-15 |
| 24 | VHF recovery beacon signal not received during descent. | CSM-101 | Cause unknown. Antenna may not have deployed properly until stable I attitude on water was achieved. | None. | Apollo 7 | MSC-PA-R-68-15 |
| 25 | Apparent free water in suit supply hoses. | CSM-101 | Water separator operated inefficiently because of reservicing procedure used after altitude run. | Reservicing procedure changed. Water removal capability rechecked prior to flight. | Apollo 7 | MSC-PA-R-68-15<br>MSC-PT-R-69-5 |
| 26 | Electromagnetic interference problems experienced during ground tests and flight: | CSM-101 | | None. Hardware changes not warranted. | Apollo 7 | MSC-PA-R-68-15 |
| | a. Mission timer started inadvertently. | | a. Associated with oxygen fan cycle. | | | |
| | b. Computer program alarm. | | b. Associated with turning interior lights on bright. | | | |
| | c. Central timing equipment reset. | | c. Unknown. | | | |

APOLLO 8

| Anomaly No. | Anomaly Statement | Vehicle/ Equipment | Cause | Corrective Action | Missions | References |
|---|---|---|---|---|---|---|
| 1 | Entry monitor system errors. | CSM-103 | Bubble and leak in accelerometer. | Units subjected to tilt-table tests. | Apollo 7<br>Apollo 8<br>Apollo 9<br>Apollo 10<br>Apollo 11 | MSC-PA-R-69-1<br>MSC-02417 |
| 2 | Windows fogged. | CSM-103 | Outgassing of silicone oils from RTV material. | Cure material prior to installation. | Apollo 7<br>Apollo 8<br>Apollo 12 | MSC-PA-R-69-1 |
| 3 | Cabin fans noisy. | CSM-103 | Possible resonant condition in ducting. | None. Comfortable environment can be maintained without fans. | Apollo 8<br>Apollo 15<br>Apollo 16 | MSC-PA-R-69-1 |
| 4 | Possible entry of sea water into cabin through cabin pressure relief valve. | CSM-103 | Water may have been condensation. Postflight tests did not reveal any pressure relief valve abnormalities. | None required. | Apollo 8 | MSC-PA-R-69-1 |
| 5 | Steel cables in recovery loop broke. | CSM-103 | Recovery loop had exhibited failures previously and was augmented with an auxiliary nylon loop installed by swimmer. | Steel-cable loop replaced by permanent nylon loop for Apollo 12 and subsequent spacecraft. | Apollo 8 | MSC-PA-R-69-1 |
| 6 | Swimmer interphone inoperative. | CSM-103 | Probable incorrect operation of interphone. | Training procedures improved. | Apollo 8 | MSC-PA-R-69-1 |

APOLLO 8

| Anomaly No. | Anomaly Statement | Vehicle/ Equipment | Cause | Corrective Action | Missions | References |
|---|---|---|---|---|---|---|
| 7 | Potable water tank quantity measurement erratic. | CSM-103 | Evidence was found of moisture in indicator housing and oxygen side of tank pressurization system caused by backup of urine dump in potable water tank oxygen vent line. Moisture may have caused erratic readings. | Tank filled to 80 percent of capacity for Apollo 9. Urine dump/oxygen vent interface changed for Apollo 10. | Apollo 8<br>Apollo 12<br>Apollo 13 | MSC-PA-R-69-1 |

APOLLO 9

| Anomaly No. | Anomaly Statement | Vehicle/ Equipment | Cause | Corrective Action | Missions | References |
|---|---|---|---|---|---|---|
| 1 | Propellant isolation valve closures. | CSM-104 | Pyrotechnic shock. | Valves to be checked after separation of CSM from S-IVB. Valves having no cabin indicators to be cycled after separation. | Apollo 9<br>Apollo 11<br>Apollo 12<br>Apollo 14<br>Apollo 15 | MSC-PA-R-69-2 |
| 2 | Scanning telescope shaft stuck intermittently and mechanical counter shaft became inoperative. | CSM-104 | Pin in "tenths" counter drum dropped out and jammed gear on shaft resolver. | Proper inspection of counters to insure correct tolerances. | Apollo 9 | MSC-PA-R-69-2 |
| 3 | System for automatic control of cryogenic hydrogen tank pressure failed. | CSM-104 | Probably an intermittent open circuit in the motor-control circuit. | None. | Apollo 9 | MSC-PA-R-69-2 |
| 4 | Erroneous docking probe indications. | CSM-104 | Extend/release-retract switch was not actuated for a sufficient time to allow docking probe to fully extend. | AOH changed to require holding switch in extend/release position until physical separation. | Apollo 9 | MSC-PA-R-69-2 |
| 5 | Uplink commands not accepted. | CSM-104 | Unknown. | Recycle up-telemetry switch to restore operation. | Apollo 9<br>Apollo 16 | MSC-PA-R-69-2 |
| 6 | Entry monitor system failed to scribe during entry. | CSM-104 | Scribe coat hardened on scroll. Stylus holder and bushing contaminated with Lock-tite. | The following were performed for Apollo 10 and subsequent spacecraft.<br>a. Glyptol used instead of Lock-tite.<br>b. Stylus spring load increased.<br>c. Dimension of stylus holder and bushing verified.<br>d. Acceptance tests to verify scribing. | Apollo 7<br>Apollo 8<br>Apollo 9<br>Apollo 10<br>Apollo 11 | MSC-PA-R-69-2<br>MSC-02417 |
| 7 | Indications of service propulsion system propellant unbalance. | CSM-104 | Electrical zero bias in oxidizer measuring circuit after storage tank depletion. | Master alarms and warnings for this system not required and have been deleted for Apollo 10 and subsequent spacecraft. Procedural change made to minimize electrical zero bias. | Apollo 9 | MSC-PA-R-69-2 |
| 8 | Unexplained master alarms. | CSM-104 | Probably caused by external inputs to caution and warning system. | None. | Apollo 9<br>Apollo 10 | MSC-PA-R-69-2 |

APOLLO 9

| Anomaly No. | Anomaly Statement | Vehicle/ Equipment | Cause | Corrective Action | Missions | References |
|---|---|---|---|---|---|---|
| 9 | Fuel cell 2 condenser exit temperature outside normal range. | CSM-104 | Possible coolant loop contamination buildup in secondary bypass valve. | Procedures developed to damp oscillations if they occur. Secondary bypass valve design changed for Apollo 14 and subsequent spacecraft. | Apollo 7<br>Apollo 8<br>Apollo 9<br>Apollo 10<br>Apollo 11 | MSC-PA-R-69-2 |
| 10 | Docking spotlight failed | CSM-104 | Circuit breaker not closed. | Crew checklist changed to include closing of circuit breaker prior to spotlight deployment. | Apollo 9 | MSC-PA-R-69-2 |
| 11 | Interior floodlight anomalies. | CSM-104 | Cathode erosion caused failure of one lamp - broken wire caused second lamp to fail. | Procedures incorporated to insure operation of lamps in full-bright configuration in ground tests and in flight. | Apollo 7<br>Apollo 9 | MSC-PA-R-69-2 |
| 12 | Computer did not respond to manual entries. | CSM-104 | Possible procedural errors. | None. | Apollo 9 | MSC-PA-R-69-2 |
| 13 | Slow repressurization of surge tank. | CSM-104 | Valve in wrong position because of misaligned markings. | Proper alignment to be verified on subsequent spacecraft. | Apollo 9 | MSC-PA-R-69-2 |
| 14 | Docking ring separation charge holder came out of channel and extended beyond periphery of tunnel structure. | CSM-104 | Holder was not properly retained. | Retention spring installed. | Apollo 9<br>Apollo 10 | MSC-PA-R-69-2 |
| 15 | Descent propulsion system regulator manifold pressure dropped. | LM-3 | Air drawn through manifold into tank heat exchanger during servicing resulting in partially blocked heat exchanger. | Ground support equipment and procedures modified for Apollo 10 and subsequent spacecraft. | Apollo 9 | MSC-PA-R-69-2 |
| 16 | Supercritical helium tank pressure decayed. | LM-3 | Probable defective braze in squib isolation valve. | Valve configuration changed for Apollo 10 and subsequent spacecraft. | Apollo 9 | MSC-PA-R-69-2 |
| 17 | Tracking light failed. | LM-3 | Probable high-voltage breakdown in pulse-forming network | Additional testing for Apollo 10 light. Modified light used for Apollo 11 and 12. | Apollo 9<br>Apollo 12 | MSC-PA-R-69-2 |
| 18 | Push-to-talk switches inoperative. | LM-3 | Probable broken common wire to switches. | Operating procedures to include troubleshooting procedures to circumvent problem. | Apollo 9 | MSC-PA-R-69-2 |
| 19 | Activation of abort guidance system caused warning indication. | LM-3 | Probable open or short in 26-gage wire between abort electronics assembly and signal conditioner electronics assembly. | Trip levels are measured for each vehicle at launch site. Output parameters for abort electronics assembly and transfer functions for signal conditioner electronics assembly measured on bench. | Apollo 9 | MSC-PA-R-69-2 |
| 20 | Binding of forward hatch. | LM-3 | Interference by insulation blankets and possible insufficient hatch clearance. | Top hatch shield extended to hatch structure and clearance increased for Apollo 10 and subsequent spacecraft. | Apollo 9 | MSC-PA-R-69-2 |

APOLLO 9

| Anomaly No. | Anomaly Statement | Vehicle/ Equipment | Cause | Corrective Action | Missions | References |
|---|---|---|---|---|---|---|
| 21 | Forward hatch door stop (snubber) would not hold hatch open. | LM-3 | Excessive clearance between snubber and Velcro. | Snubber redesigned for Apollo 11 and subsequent spacecraft. | Apollo 9 | MSC-PA-R-69-2 |
| 22 | Cabin noise level high. | LM-3 | Operation of cabin fans, water/glycol pumps and suit compressors during helmets-off periods. | Ear pieces provided and procedures changed. Effective with Apollo 14, muffler added in line at outlet of water/glycol pump assembly. | Apollo 9 Apollo 10 | MSC-PA-R-69-2 |
| 23 | Structural contact at S-IC shutdown. | LM-3 | Lateral loads probably caused helium diffuser flange to contact top deck flange. | Loads predicted to be less on Apollo 10. Top deck flange modified on Apollo 11 and subsequent spacecraft. | Apollo 9 | MSC-PA-R-69-2 |
| 24 | Data entry and display assembly operator error light. | LM-3 | Possible bent switch leaf or contamination preventing microswitch contact. | Microswitches modified. | Apollo 9 | MSC-PA-R-69-2 |
| 25 | Descent engine firing rough at 27-percent throttle. | LM-3 | Suspected helium ingestion into engine by uncovering of zero-g can, due to high ullage. | No detrimental effect. | Apollo 9 | MSC-PA-R-69-2 |
| 26 | Regulated helium pressure to propellant tanks decreased in ascent propulsion system. | LM-3 | Possible regulator contamination by backflow during solenoid valve replacement. | Procedures developed for prevention of contamination when replacement of components is necessary. | Apollo 9 | MSC-PA-R-69-2 (Mission Rept) MSC-PA-R-69-2 (Anomaly Rept No. 1) |
| 27 | Landing radar interference. | LM-3 | Interference was produced by pieces of H-film from the base heat shield. | Spray coating of KEL-F plastic substituted for H-film on base heat shield for Apollo 11 and subsequent spacecraft. | Apollo 9 | MSC-PA-R-69-2 (Mission Rept) MSC-PA-R-69-2 (Anomaly Rept No. 2) |
| 28 | Air bubbles in liquid cooled garment tubes. | GFE | Air ingested through sublimator into coolant loop when PLSS was being connected to liquid cooled garment. | Make-up line on PLSS relocated to upstream side of water shutoff and relief valve for Apollo 11 and subsequent missions. | Apollo 9 | MSC-PA-R-69-2 |
| 29 | Oxygen purge system pallet was difficult to stow. | GFE | Locking pin could not be inserted through bulkhead structure into pallet because of location of hole, angle of insertion and poor lighting. | Oxygen purge system to be stowed in different area and more easily operated locking pins used for Apollo 10 and subsequent missions. | Apollo 9 | MSC-PA-R-69-2 |
| 30 | Background brightness "washed-out" reticle image of crewman optical alignment sight during docking. | GFE | Neutral density filter and reflection from command module. | Two ranges of reticle illumination intensity to be provided and different lighting conditions expected for Apollo 10 and subsequent missions. | Apollo 9 | MSC-PA-R-69-2 |
| 31 | Oxygen purge system checkout light failed. | GFE | Main power switch actuator mechanism did not close switch. | Actuator mechanism modified for Apollo 10 and subsequent missions. | Apollo 9 | MSC-PA-R-69-2 |
| 32 | Communications lost when using lightweight headset and communications carrier. | GFE | Possibly caused by loose airlock sleeve on connector or improper mating of lightweight headset connector to suit harness and T-adapter. | Airlock sleeves to be torqued to between 45 and 50 inch-pounds and Lock-tite applied to secure sleeves to connector. | Apollo 9 | MSC-PA-R-69-2 |

APOLLO 10

| Anomaly No. | Anomaly Statement | Vehicle/ Equipment | Cause | Corrective Action | Missions | References |
|---|---|---|---|---|---|---|
| 1 | Burst disc in reaction control system ruptured prior to flight. | CSM-106 | Overpressurization during preflight checkout. | Caution notes incorporated in procedures. Leak check to be made after propellant servicing. | Apollo 10 | MSC-00126 |
| 2 | Helium manifold pressure in reaction control system decayed. | CSM-106 | Low-pressure helium manifold in fuel leg of system A leaked slightly. | System to be pressurized to 100 psia about 30 days prior to flight to insure leaks are detected. | Apollo 10 | MSC-00126 |
| 3 | Rendezvous radar transponder failed to operate temporarily. | CSM-106 | Possible intermittent failure in SM wiring, rendezvous radar control box, or transponder; possible improper switch configuration. | None. | Apollo 10 | MSC-00126 |
| 4 | Primary evaporator dried out after a few minutes of operation. | CSM-106 | Insufficient travel of water control circuit switch actuator. | Actuator rigging procedures modified to assure proper overtravel. | Apollo 10 | MSC-00126 |
| 5 | Transmissions from LM on VHF simplex-A not received in CM. | CSM-106 | Both vehicles were probably not configured simultaneously for communications on simplex-A. | None. | Apollo 10 | MSC-00126 |
| 6 | Crew couch stabilizer left connected during launch. | CSM-106 | Stabilizer should have been removed prior to launch to allow stroking of couch struts if an abort had been required. | Mandatory inspection point added to pre-ingress checklist. | Apollo 10 | MSC-00126 |
| 7 | Fuel cell 1 pump package failure. | CSM-106 | Phase-to-phase short, probably caused by breakdown of insulation in hydrogen pump. | None. Major redesign of hydrogen pump would be required. | Apollo 10 | MSC-00126 |
| 8 | Hydrogen flow to fuel cell decayed slowly after extended hydrogen purge of fuel cell 1. | CSM-106 | Extended purge created low temperatures on regulator and consequent regulator leakage. | Extended hydrogen purges not to be performed and vent line heater to be left on for 10 minutes after termination of hydrogen purge. | Apollo 10 | MSC-00126 |
| 9 | Automatic pressure control system did not turn hydrogen tank heaters off during fuel cell 1 purge. | CSM-106 | Pressure transducer shift resulted from cold soak during extended purge. | Extended hydrogen purges not to be performed on subsequent flights. | Apollo 10 | MSC-00126 |
| 10 | Gyro display coupler drift was felt by crew to be excessive. | CSM-106 | Drift rates in postflight tests were not indicative of reported performance. | None. | Apollo 10 | MSC-00126 |
| 11 | Data storage equipment lost data. | CSM-106 | Cover deformed because of differential pressure. Cover contacted and slowed tape reel. | Relief valves to be used that operate at lower differential pressure. | Apollo 10 | MSC-00126 |
| 12 | Entry monitor system stylus cut through emulsion on scroll during pre-entry tests. | CSM-106 | Emulsion had hardened because of chemical reaction. | New manufacturing processes implemented for Apollo 11 and precautionary measures taken to prevent hardening. Different scroll coating to be used for Apollo 12 and subsequent spacecraft. | Apollo 7<br>Apollo 8<br>Apollo 9<br>Apollo 10<br>Apollo 11 | MSC-00126<br>MSC-02417 |
| 13 | VHF recovery antenna 1 did not deploy properly. | CSM-106 | Ground-plane radial hung up on guide ramp. | None. | Apollo 10 | MSC-00126 |

APOLLO 10

| Anomaly No. | Anomaly Statement | Vehicle/ Equipment | Cause | Corrective Action | Missions | References |
|---|---|---|---|---|---|---|
| 14 | Potable water contained gas. | CSM-106 | Oxygen from pressure system and hydrogen from fuel cells. | Membrane device installed on water gun for Apollo 11 and subsequent spacecraft. Hydrogen separator installed in water system for Apollo 12 and subsequent spacecraft. | Apollo 10 | MSC-00126 |
| 15 | Flow from water gun appeared to be less than normal for about 2 hours. | CSM-106 | Excess lubrication from O-ring partially clogged gun. | Process specifications changed to insure that excessive lubricant is not used. | Apollo 10 | MSC-00126 |
| 16 | Tunnel would not vent prior to LM separation. | CSM-106 | Incorrect fitting installed on vent prior to flight. | End-to-end test performed on Apollo 11 and subsequent spacecraft to verify system. | Apollo 10 | MSC-00126 |
| 17 | Thermal coating came off forward hatch when LM cabin was pressurized. | CSM-106 | Insulation vent holes were obstructed. | Evaluation showed that insulation is not necessary. Single layer of H-film tape applied to hatch ablator for Apollo 11 and subsequent spacecraft. | Apollo 10 | MSC-00126 |
| 18 | Launch vehicle engine warning indicators operated intermittently during preflight testing. | CSM-106 | Cold solder joints. | Units screened for Apollo 11 and subsequent spacecraft. | Apollo 10 | MSC-00126 |
| 19 | Digital event timer jumped 2 minutes. At other times, tens-of-seconds failed to advance. | CSM-106 | Spurious noise input probably caused 2-minute jump. Tens-of-seconds problem was caused by contamination (paint flakes from units wheel) preventing electrical contact between tab and brush. | Screening test developed. | Apollo 10<br>Apollo 15<br>Apollo 16 | MSC-00126 |
| 20 | Docking ring charge holder not captured by retention springs. | CSM-106 | Retention spring design marginal. | Improved retention method to be used for Apollo 15 and subsequent spacecraft. | Apollo 10 | MSC-00126 |
| 21 | Fuel cell 2 exit temperature oscillated. | CSM-106 | Undetermined. | Block II retrofit secondary coolant bypass valve (Block I valve poppet) used on Apollo 11. | Apollo 7<br>Apollo 8<br>Apollo 9<br>Apollo 10<br>Apollo 11 | MSC-00126<br>MSC-02426 |
| 22 | Couch heat strut lockout handle in locked position. | CSM-106 | Spring in locking mechanism improperly installed after modification. | Mandatory inspection point added to manufacturing process. | Apollo 10 | MSC-00126 |
| 23 | Recovery flashing light ceased to operate after landing. | CSM-106 | Thermally-induced stresses between the flash tube and its encapsulant caused the flash tube to crack. | AOH changed so that light is to be operated only in low-flash-rate mode during descent. | Apollo 10 | MSC-00126<br>MSC-02623 |
| 24 | Engine pitch gimbal drive actuator fail indication received. | LM-4 | An uncommanded gimbal movement probably occurred due to failure of the spring-loaded brake to engage after removal of drive signal. | Brake mechanism was redesigned. Time allowed for uncommanded gimbal movement without causing a fail indication was increased. | Apollo 10 | MSC-00126 |

APOLLO 10

| Anomaly No. | Anomaly Statement | Vehicle/ Equipment | Cause | Corrective Action | Missions | References |
|---|---|---|---|---|---|---|
| 25 | Master alarms and descent propellant low-level indications during descent phasing maneuver | LM-4 | First master alarm and low-level indication were probably caused by a gas bubble around the propellant low-level sensor. A second alarm probably resulted from an intermittent failure in the master alarm and propellant-level circuits. | Descent propellant low-level indicator removed from master alarm for Apollo 11 and subsequent spacecraft. | Apollo 10 | MSC-00126 |
| 26 | S-band backup down-voice received from LM during revolution 13 was unusable. | MSFN | Operator error within Goldstone station. | None. | Apollo 10 | MSC-00126 |
| 27 | S-band steerable antenna did not track. | LM-4 | Track mode switch was probably inadvertently switched to OFF. | None. | Apollo 10 | MSC-00126 |
| 28 | Optical system problems: | LM-4 | | | Apollo 10 | MSC-00126 |
| | a. Contamination on reticle of alignment optical telescope. | | a. Contamination could have entered through air gap at interface of mirror and telescope housing subsequent to prelaunch cleaning. | a. Reticle and prism were cleaned when sunshade was installed on Apollo 11 spacecraft. Same procedure to be used for subsequent spacecraft. | | |
| | b. Reticle dimmer control required manual holding in bright position. | | b. Operation normal. | b. None. | | |
| | c. Stars could not be seen six star diameters from center of reticle. | | c. Prism was possibly contaminated during final installation of telescope sunshade. | c. Same as (a). | | |
| 29 | Drinking water contained gas. | LM-4 | Probable source of gas was nitrogen pressurant in tank and air entrapped in water hose, gun and connecting plumbing. Bacteria filter (which helps remove gas) was not used on this mission. | Prelaunch procedures changed to include servicing water hose and connecting plumbing. | Apollo 10 | MSC-00126 |
| 30 | Cabin noise level high. | LM-4 | Glycol pump. | Ear plugs provided for sleep periods. Muffler added at outlet of pump for Apollo 14 and subsequent spacecraft. | Apollo 9<br>Apollo 10 | MSC-00126 |
| 31 | Heater light on oxygen purge system did not come on. | GFE | Unknown. Failure could not be duplicated in postflight tests. | None. Operation without heaters acceptable. | Apollo 10 | MSC-00126 |
| 32 | Recording of LM low-bit rate PCM data in CM ceased before all data received. | CSM-106 | CM communications reconfigured from voice and data mode to ranging before completion of dump. | None. | Apollo 10 | MSC-00126 |
| 33 | Yaw-rate gyro output error. | LM-4 | Most probably caused by static friction from contamination that may have been introduced during rebuilding. | Apollo 11 gyro history analyzed and no discrepancies found. | Apollo 10 | MSC-00126 |

APOLLO 10

| Anomaly No. | Anomaly Statement | Vehicle/ Equipment | Cause | Corrective Action | Missions | References |
|---|---|---|---|---|---|---|
| 34 | Instrumentation discrepancies: | LM-4 | | | Apollo 10 | MSC-00126 |
| | a. RCS chamber pressure switches failed closed. | | a. Probably caused by residue under switch diaphragms. | a. None. | | |
| | b. Indicated glycol temperature was zero when pump switch was in pump 2 position. | | b. Possible broken jumper across pump switch contacts, or incomplete contact in pump 2 switch position. | b. None. | | |
| | c. RCS manifold pressure indications erroneous. | | c. Possible defective connections and calibration shifts. | c. Critical measurements to be instrumented with improved transducer on Apollo 15 and subsequent spacecraft. | | |
| | d. Temperature measurement of thermal shield for radioisotope thermoelectric generator cask incorrect. | | d. Probable broken wire, failed transducer, or baroswitch failure. | d. Instrumentation wiring to be checked after final installation. | | |
| | e. Descent oxidizer tank ullage pressure indication in cabin was zero prior to descent engine firing. | | e. Probably faulty transducer or wiring between transducer and cabin display. | e. None. | | |
| 35 | Cabin pressure dropped rapidly after LM jettison. | LM-4 | Hatch latch failed because tunnel could not be vented prior to jettison (see item 16). | None required. | Apollo 10 | MSC-00126 |
| 36 | Unexpected carbon dioxide levels in cabin. | LM-4 | Probable greater-than-predicted lithium hydroxide cartridge performance variations. | Predictions to be modeled around more realistic operational characteristics. | Apollo 10 | MSC-00126 |
| 37 | Large attitude excursions occurred at staging. | LM-4 | Abort guidance mode control switch was inadvertently cycled, followed by an incorrect output of the yaw rate gyro. In reacting to yaw rate gyro problem, the guidance mode control switch was transferred to AUTO, resulting in high rates. | Crew briefing. | Apollo 10 | MSC-00126 |
| 38 | Master alarm and ascent propellant low-level indication during first ascent engine firing. | LM-4 | Sensor uncovered by gas bubble. | None. Propellants will be settled when ascending from lunar surface. | Apollo 10 | MSC-00126 |
| 39 | LM 70-mm camera stopped. | GFE | Film was binding in magazine because of damaged film advance mechanism. Drive motor became overloaded and failed. | Preflight inspection to be improved. Fuse to be changed from 1.6 amp to 1.2 amp. | Apollo 10 | MSC-00126 |
| 40 | LM 16-mm camera failed to operate with one magazine. | GFE | Marginal clearance between camera and magazine required extra care to obtain proper alignment. | Magazines to be checked for proper clearances. | Apollo 10 | MSC-00126 |
| 41 | CM 16-mm camera ceased to operate in pulse mode. | GFE | Magazine interlock microswitch failed. | High reliability switches installed in cameras for Apollo 11 and subsequent missions. | Apollo 10 | MSC-00126 |

APOLLO 11

| Anomaly No. | Anomaly Statement | Vehicle/ Equipment | Cause | Corrective Action | Missions | References |
|---|---|---|---|---|---|---|
| 1 | Nitrogen pressure decayed in secondary service propulsion engine actuation system. | CSM-107 | Leakage due to contamination induced failure of solenoid control valve. | Filters installed in Apollo 12 and subsequent spacecraft. Nitrogen facility cleanliness more closely controlled. | Apollo 11 | MSC-00171 |
| 2 | Heater element in oxygen tank 2 inoperative. | CSM-107 | Probable open on terminal board in heater circuit. Inoperative condition existed during countdown. | Launch site test requirements changed to specify amperage level to verify that both tank heaters are operational. | Apollo 11 | MSC-00171 |
| 3 | Automatic coil of CM RCS minus yaw engine valve responded erratically to firing commands. | CSM-107 | Intermittent terminal board connection. | Records researched and no questionable terminal boards used in critical circuits on subsequent spacecraft. | Apollo 11 | MSC-00171 |
| 4 | Electroluminescent segment on EMS numeric display was inoperative. | CSM-107 | Probable short due to punctured insulation. | Insure that remaining units have properly routed wires. | Apollo 7<br>Apollo 8<br>Apollo 9<br>Apollo 10<br>Apollo 11 | MSC-00171<br>MSC-02417 |
| 5 | Oxygen flow rate master alarms during initial LM pressurization. | CSM-107 | Probable faulty capacitor in alarm circuit. | None. No previous failure history of capacitors. | Apollo 11 | MSC-00171 |
| 6 | Propellant isolation valves closed at CSM/S-IVB separation. | CSM-107 | Pyrotechnic shock. | None required other than procedures stated for Apollo 9. | Apollo 9<br>Apollo 11<br>Apollo 12<br>Apollo 14<br>Apollo 15 | MSC-00171 |
| 7 | Peculiar odor in docking tunnel. | CSM-107 | Odor resembled burned wire insulation; however, it was probably caused by outgassing from hatch ablator material. (Higher ablator temperatures may have been experienced because of removal of hatch outer insulation.) | Brief crews. | Apollo 11 | MSC-00171 |
| 8 | Indication of oxygen flow rate was lower than normal. | CSM-107 | Transducer negatively biased because of change in heater resistance within flow sensor bridge. | None. | Apollo 11 | MSC-00171 |
| 9 | Tie-wrap knots became untied on forward heat shield mortar umbilical lanyard. | CSM-107 | Knots improperly tied. | More detailed procedure developed. All subsequent spacecraft reworked. | Apollo 11 | MSC-00171 |
| 10 | Primary water/glycol evaporator outlet temperature did not stay within normal limits. | CSM-107 | A bearing assembly on the worm gear shaft of the temperature control valve actuator failed. | None required. Valve can be manually set. | Apollo 11<br>Apollo 16 | MSC-00171<br>MSC-03460 |
| 11 | Service module did not skip out of earth's atmosphere. | CSM-107 | Thruster firing times were not optimized for propellant sloshing effects. | Jettison control sequence modified for Apollo 13 and subsequent vehicles. | Apollo 8<br>Apollo 10<br>Apollo 11 | MSC-00171<br>MSC-03466 |
| 12 | Fuel cell 2 exit temperature periodically disturbed. | CSM-107 | Probable condenser water retention and periodic release. Not detrimental. | Procedures developed to damp oscillations if they occur. | Apollo 7<br>Apollo 8<br>Apollo 9<br>Apollo 10<br>Apollo 11 | MSC-02426 |

APOLLO 11

| Anomaly No. | Anomaly Statement | Vehicle/ Equipment | Cause | Corrective Action | Missions | References |
|---|---|---|---|---|---|---|
| 13 | Mission timer stopped. | LM-5 | Probable cracked solder joint associated with cordwood assembly of electrical components. | New timers using integrated circuits and other design changes to be incorporated when available. | Apollo 11 Apollo 12 Apollo 15 | MSC-00171 |
| 14 | Fuel in the descent propulsion system fuel/helium heat exchanger was frozen by helium flowing through the heat exchanger, causing high fuel line pressure when heat soaked back from the engine after landing. | LM-5 | Simultaneous venting of propellant and supercritical helium tanks. | Helium solenoid valve to be closed prior to fuel venting and opened some time later. | Apollo 11 | MSC-00171 |
| 15 | Cabin indication of carbon dioxide partial pressure high after ascent. | LM-5 | Condensate got into sensor causing erroneous indications. | Drain tank vent line relocated on Apollo 13 and subsequent spacecraft. | Apollo 11 | MSC-00171 |
| 16 | Communications difficult to maintain using steerable antenna. | LM-5 | Vehicle blockage and multipath interference. | Operational procedures to be changed to minimize vehicle blockage and multipath conditions. | Apollo 11 Apollo 12 Apollo 14 Apollo 15 | MSC-00171 |
| 17 | Computer alarms occurred during descent. | LM-5 | Executive overflow alarms, caused by automatic multiple rescheduling of the same job. The multiple rescheduling was caused by counter interrupts from the rendezvous radar coupling data unit. | Rendezvous radar coupling data unit counter interrupts not processed using Luminary 1B program on subsequent missions. Not as much computer time required for descent monitoring. | Apollo 11 | MSC-00171 |
| 18 | Cabin depressurization time longer than expected. | LM-5 | Depressurization through bacteria filter required more time than predicted. | Bacteria filter not used on Apollo 12 and subsequent spacecraft, reducing decompression time. | Apollo 11 | MSC-00171 |
| 19 | Electroluminescent segment on abort guidance system entry and display assembly was inoperative. | LM-5 | Probable component or wiring failure. | More comprehensive prelaunch testing required. | Apollo 11 | MSC-00171 |
| 20 | Breakup of voice transmission occurred during extravehicular activity. | LM-5 | Probable inadvertent low setting of sensitivity control. | Brief crews. | Apollo 11 | MSC-00171 |
| 21 | Echo received during uplink voice transmissions. | LM-5/MSFN | Inherent in communications system. | Downlink voice inhibited during periods of uplink voice transmission. | Apollo 11 | MSC-00171 |
| 22 | Data storage electronics assembly did not record properly. | LM-5 | Probable open in timing signal return line and voice signal line. | Wire harness at connector wrapped with tape to prevent flexure damage on Apollo 12 and subsequent spacecraft. | Apollo 11 | MSC-00171 |
| 23 | Knob on engine arm circuit breaker was broken. | LM-5 | Knob was probably broken by impact of oxygen purge system during EVA preparations. | Circuit breaker guards installed on Apollo 12 and subsequent spacecraft. | Apollo 11 | MSC-00171 |
| 24 | Thrust chamber pressure switch had slow response to jet driver commands. | LM-5 | Probable particulate contamination in switch inlet passage. | Brief crews to recognize and handle similar problems. | Apollo 11 | MSC-00171 |

APOLLO 11

| Anomaly No. | Anomaly Statement | Vehicle/ Equipment | Cause | Corrective Action | Missions | References |
|---|---|---|---|---|---|---|
| 25 | Water entered suit through suit half vent duct. | LM-5 | Probable leakage through water separator selector valve. | Allowable valve actuation force lowered and inspection for linkage binding incorporated into factory and launch site procedures. | Apollo 11 | MSC-00171 |
| 26 | Reaction control system warning flags observed for three engine pairs. | LM-5 | Probable erroneous caution and warning system or display flag operation caused by interruption of 28 Vdc supply or oscillator failure. | None. No history of similar failures. | Apollo 11 | MSC-00171 |
| 27 | Lunar surface television camera cable retained coiled shape. | GFE | Memory is inherent characteristic of cable. | Deployment geometry to be changed. | Apollo 11 | MSC-00171 |
| 28 | Mating electrical connectors from remote control unit to portable life support system was difficult. | GFE | Male connector could not be firmly grasped and aligned. | Male connector redesigned. | Apollo 11 | MSC-00171 |
| 29 | Closing of sample return containers was difficult. | GFE | Flight containers had not been subjected to repeated closings as had the training containers, and lubricant had been removed from latch linkage during cleaning. | Lubricant burnished on after cleaning. | Apollo 11 | MSC-00171 |

APOLLO 12

| Anomaly No. | Anomaly Statement | Vehicle/ Equipment | Cause | Corrective Action | Missions | References |
|---|---|---|---|---|---|---|
| 1 | Display/keyboard malfunctioned prior to launch - displayed all 8's. | CSM-108 | Probable relay contamination. | Fabrication process improved to minimize contamination, screening procedures improved, and malfunction procedure developed to clear condition. | Apollo 12 | MSC-01855 |
| 2 | Hydrogen tank 2 heat leak prior to launch. | CSM-108 | Incomplete bond in stainless steel/titanium bimetallic joint. | Apollo 12 tank was removed and replaced. Tanks from lots suspected of having poor quality joints recalled for replacement of joints. | Apollo 12<br>Apollo 16 | MSC-01855 |
| 3 | Lightning struck spacecraft and launch vehicle resulting in:<br>a. Loss of nine instrumentation measurements.<br>b. Loss of inertial platform reference.<br>c. Disconnection of fuel cells. | CSM-108 | Vehicle launched during thunderstorm. | Launch rules changed to specify allowable meteorological conditions. Programming change made to inhibit activation of platform coarse-align mode during launch. | Apollo 12 | MSC-01855<br>MSC-01540<br>MSC-04112<br>(Supplement 8) |
| 4 | Stabilization and control system circuit breaker was open during postinsertion checks. | CSM-108 | Breaker was probably not set during prelaunch checks. | Checks to be made more carefully. | Apollo 12 | MSC-01855 |
| 5 | Propellant and helium isolation valves closed at CSM/S-IVB separation. | CSM-108 | Pyrotechnic shock. | Maintain use of procedures developed to verify position of valves. | Apollo 9<br>Apollo 11<br>Apollo 12<br>Apollo 14<br>Apollo 15 | MSC-01855 |

APOLLO 12

| Anomaly No. | Anomaly Statement | Vehicle/ Equipment | Cause | Corrective Action | Missions | References |
|---|---|---|---|---|---|---|
| 6 | Operation of S-band high gain antenna in narrow-beam mode resulted in low signal strength on several occasions. | CSM-108 | Probable failure of dual diplexer or narrow-beam comparitor component. | Phase III antenna strip-line units used on Apollo 13 and subsequent spacecraft. | Apollo 12<br>Apollo 13<br>Apollo 14<br>Apollo 16 | MSC-01855 |
| 7 | Discrepancy in actual (measured) and calculated oxygen usage. | CSM-108 | Leakage from 900-psi oxygen system within service module. | None. Preflight tests considered adequate. | Apollo 12 | MSC-01855 |
| 8 | LM crew saw strap-like material in vicinity of SM/SLA interface just prior to docking. | CSM-108 | Material was similar to loose pieces shown on Apollo 10 photos. | None. Condition considered not detrimental. | Apollo 12 | MSC-01855 |
| 9 | Angular position of optics shaft fluctuated in zero optics mode. | CSM-108 | Possible motor drive amplifier module malfunction. | None. No evidence of generic problem or design deficiency. | Apollo 12<br>Apollo 13 | MSC-01855 |
| 10 | Windows were contaminated. | CSM-108 | Rain water, residue from launch escape system engine, and outgassing of silicone oils from window seals (hatch only). | For Apollo 13 and subsequent spacecraft:<br>a. Seals added to boost protective cover to prevent rain water leakage.<br>b. Hatch window cavity purge prior to flight.<br>c. Insulation material removed from between inner and outer hatch windows. | Apollo 7<br>Apollo 8<br>Apollo 12 | MSC-01855 |
| 11 | VHF recovery antenna 2 did not deploy properly. | CSM-108 | Adhesive substance probably held protective flap over ground plane radials. | Clarify installation instructions to assure removal of adhesives and proper deployment of radials. | Apollo 12 | MSC-01855 |
| 12 | Command module RCS oxidizer isolation valve would not remain closed during postflight operations. | CSM-108 | Damaged bellows, probably resulting from pressurization of system with isolation valves closed. | Brief crews. | Apollo 7<br>Apollo 12 | MSC-01855 |
| 13 | Retention bracket for oxygen hose came loose during landing. | CSM-108 | Bracket not properly bonded to panel. | Manufacturing requirements to include torque testing of bracket. | Apollo 12 | MSC-01855 |
| 14 | Food preparation unit leaked after hot water dispensed. | CSM-108 | Two valve O-rings damaged from particle contamination. | Check valves for leakage when water temperature is 150° F. | Apollo 12<br>Apollo 14 | MSC-01855 |
| 15 | Forward heat shield mortar umbilical lanyard was severed. | CSM-108 | Probably broken by drogue steel cable riser when drogue was deployed. | None. Lanyard function complete before drogue deployment. | Apollo 12 | MSC-01855 |
| 16 | Instrumentation discrepancies: | CSM-108 | | | | MSC-01855 |
| | a. RCS quad D helium manifold pressure indications erroneous. | | a. Probable weakening of strain gage bonding. | a. None. Measurement not necessary for flight. | Apollo 12 | |
| | b. Suit pressure transducer indicated low. | | b. Transducer internally contaminated with nickel-plating particles. | b. None. Problem considered to be isolated occurrence. | Apollo 12<br>Apollo 13 | |
| | c. Potable water quantity data erratic. | | c. Stain found on potentiometer resistance wafer. No evidence of moisture or urine contamination of measuring system components as on Apollo 8. | c. None. Alternate methods available for determining water quantity. | Apollo 8<br>Apollo 12<br>Apollo 13 | |
| | d. Fuel cell 3 regulated hydrogen pressure decayed. | | d. Probable leak in pressure transducer diaphragm. | d. None. | Apollo 12 | |

APOLLO 12

| Anomaly No. | Anomaly Statement | Vehicle/ Equipment | Cause | Corrective Action | Missions | References |
|---|---|---|---|---|---|---|
| 17 | Panel 2 mission clock tuning fork display operated intermittently and clock had cracks in face glass. | CSM-108 | Probable cracked solder joint associated with cordwood construction. Manufacturing process induces stress into glass. | New mission timers developed for Apollo 13 and subsequent spacecraft. Clear pressure-sensitive tape placed over glass. | Apollo 7<br>Apollo 11<br>Apollo 12<br>Apollo 15 | MSC-01855 |
| 18 | VHF communications between CSM and LM during ascent and rendezvous were unreadable. | CSM-108 | Improper squelch sensitivity setting in CM. Improper use of lightweight headset in CM. | Brief crews and use communications carrier headsets during critical mission phases. | Apollo 12 | MSC-01855 |
| 19 | Docking hatch floodlight switch did not operate properly. | LM-6 | Insufficient plunger travel. | Plunger travel increased. | Apollo 12 | MSC-01855 |
| 20 | Water came out of suit inlet hoses. | LM-6 | Water bypassed water separator because of excessive water separator speed. | Water separator speed reduced by adding flow limitor to primary lithium hydroxide canister for Apollo 13 and subsequent spacecraft. | Apollo 12 | MSC-01855 |
| 21 | Cabin indication of carbon dioxide partial pressure erratic. | LM-6 | Probably caused by water entering sensor. | Water separator sump tank vent line rerouted for Apollo 13 and subsequent spacecraft. | Apollo 11<br>Apollo 12 | MSC-01855 |
| 22 | Tracking light failed. | LM-6 | Corona in high-voltage section of light resulting from high temperatures degrading potting compound. | Tracking light redesigned for Apollo 13 and subsequent spacecraft. | Apollo 9<br>Apollo 12 | MSC-01855 |
| 23 | MESA handle could not be released from support bracket. | LM-6 | D-ring stuck in retention socket because of binding of ball detent or pulling D-ring at an angle. | D-ring eliminated, and loop clamped to end of deployment cable for Apollo 13 and subsequent spacecraft. | Apollo 12 | MSC-01855 |
| 24 | Hatch thermal shield torn, causing potential hazard to suit. | LM-6 | PLSS snagged on shield during crewman egress. | Shield thickness increased and diameter of shield mounting holes increased. | Apollo 12 | MSC-01855 |
| 25 | Low-level descent propellant quantity light illuminated early. | LM-6 | Low-level point sensor uncovered by propellant sloshing. | Sampling rate increased and data averaged automatically for Apollo 13 and subsequent spacecraft. | Apollo 12 | MSC-01855 |
| 26 | Lunar surface color television camera failed. | GFE | Image sensor was exposed to extreme light level, damaging a portion of the target. | Crew training and operational procedures changed. | Apollo 12 | MSC-01855 |
| 27 | 16-mm camera operated intermittently during ascent. | GFE | Intermittent actuation of magazine interlock microswitch contacts. | Design of interlock switch actuation mechanism changed. | Apollo 12 | MSC-01855 |
| 28 | Fuel capsule for radioisotope thermoelectric generator was difficult to remove from cask assembly. | ALSEP | Binding between the contact surface of fuel capsule backplate and the latch on the cask. | Fuel capsule backplates reworked to increase clearance for Apollo 13 and subsequent missions. | Apollo 12 | MSC-01855 |
| 29 | Thermal shroud on passive seismic experiment would not lie flat and laminations separated. | ALSEP | Effect of 1/6-gravity greater than expected. | Laminations spot-sewed and weights added. | Apollo 12 | MSC-01855 |
| 30 | Cold-cathode ion gage would not remain upright. | ALSEP | Cable stiffness and effects of 1/6-gravity. | Different experiment configuration used for Apollo 13. For subsequent missions, cable wrap removed to reduce cable stiffness. | Apollo 12<br>Apollo 14 | MSC-01855 |

APOLLO 12

| Anomaly No. | Anomaly Statement | Vehicle/ Equipment | Cause | Corrective Action | Missions | References |
|---|---|---|---|---|---|---|
| 31 | Empty collection bag tended to come loose from tool carrier. | GFE | Single spring clip on right-hand bag was not adequate for bag retention. | Double spring clip to be added for Apollo 13. | Apollo 12 | MSC-01855 |
| 32 | Frame counting on CM 70-mm camera did not agree with crew count. | GFE | Magazine was inadvertently opened allowing film holder to come out. This resulted in improper film transport. | Film release knob taped after magazine loading and crews briefed. | Apollo 12 | MSC-01855 |
| 33 | Suit pressure pulses were felt by LMP during extravehicular activity. | GFE | No evidence of system malfunction. | None. | Apollo 12 | MSC-01855 |
| 34 | Exposure counter on lunar surface close-up camera did not always count. | GFE | Temperature exceeded mechanical interference point of counter. | Camera handle painted white (counter is housed in handle). | Apollo 12 | MSC-01855 |
| 35 | Shutter, counter and film advance actions of 70-mm lunar surface camera were intermittent. | GFE | Loose handle and trigger assembly. | Thumb wheel secured by star washer and roll pin instead of spring washer and set screw. | Apollo 12 | MSC-01855 |
| 36 | EVA communications degraded by tone and noise. | GFE | Tone caused by interference from fan motor when microphone amplifier supply voltage was below regulator threshold of 12.5 volts. Random noise may have been caused by intermittent open in primary winding of amplifier transformer. | Brief crew and improve quality control. | Apollo 12 | MSC-01855 |
| 37 | Weigh bags cracked and tore when handled on lunar surface, and when used for tote bags, samples bounced out. | GFE | Material (Teflon film) was too brittle and covers were not provided. | Containers made of Teflon cloth for Apollo 13 and subsequent. Collection containers provided with means of closing for Apollo 14 and subsequent. | Apollo 12 | MSC-01855 |

APOLLO 13

| Anomaly No. | Anomaly Statement | Vehicle/ Equipment | Cause | Corrective Action | Missions | References |
|---|---|---|---|---|---|---|
| 1 | Cryogenic oxygen tank 2 lost pressure. | CSM-109 | A fire which was started by electrical short-circuits in the wiring to the fan motors inside the tank led to structural failure of the tank. | The tank design was changed, a third cryogenic oxygen tank was added, an isolation valve for tank 3 was added, and an auxiliary battery was installed on Apollo 14 and subsequent spacecraft. | Apollo 13 | MSC-02680<br>MSC-02545 |
| 2 | Postlanding vent valve malfunctioned during postlanding activities (exhaust valve open - inlet valve closed). | CSM-109 | Power was applied to the valves when the valve unlock handle was pulled partially out. | Caution note was added to AOH to insure that handle is moved its full travel before switching on postlanding vent fan. | Apollo 13 | MSC-02680 |
| 3 | Optics shaft angle fluctuated in zero optics mode. | CSM-109 | Probable cause was resistance between brushes and slip rings on half-speed resolver due to vacuum and zero-g. | The only effect is system readout when optics are not in use. Shaft movement "wipes away" resistance. Crews briefed. | Apollo 12<br>Apollo 13 | MSC-02680 |

APOLLO 13

| Anomaly No. | Anomaly Statement | Vehicle/ Equipment | Cause | Corrective Action | Missions | References |
|---|---|---|---|---|---|---|
| 4 | Difficulty was experienced in obtaining high-gain antenna acquisition and tracking. | CSM-109 | Probable short in primary winding of C-axis induction potentiometer resulting in shift of scan limit and scan limit warning functions. | Launch site tests added to ensure proper functions prior to flight. Procedure developed to determine acceptable spacecraft attitudes in the event of a similar failure on subsequent flights. | Apollo 12<br>Apollo 13<br>Apollo 14<br>Apollo 16 | MSC-02680<br>MSC-03753 |
| 5 | Entry monitor system 0.05g light did not illuminate at proper time. | CSM-109 | Condition could not be duplicated in postflight testing. Possible procedural error or momentary failure. | None. | Apollo 13<br>Apollo 14 | MSC-02680 |
| 6 | Gas leaked from gusset-4 breech assembly in forward heat shield jettisoning system and burned hole in gusset cover plate. | CSM-109 | Possible out-of tolerance parts or improper assembly. | Assembly procedures improved and thermal barrier added to breech-plenum assembly. | Apollo 13 | MSC-02680 |
| 7 | RCS fuel isolation valve was found open during postflight inspection. | CSM-109 | Valve was miswired. Preflight functional checks did not reveal discrepancy. | Resistance checks to be performed in addition to functional checks on Apollo 14 and subsequent spacecraft. | Apollo 13 | MSC-02680 |
| 8 | Potable water quantity measurement fluctuated. | CSM-109 | Probable erratic operation of transducer. Specific evidence of contamination or corrosion could not be found. | None required. Water quantity can be determined with acceptable accuracy by other means. | Apollo 8<br>Apollo 12<br>Apollo 13 | MSC-02680 |
| 9 | Suit pressure measurement was erratic. | CSM-109 | Transducer probably contaminated by nickel particles. | Apollo 14 cabin pressure transducer disassembled and cleaned. Both suit and cabin transducers disassembled and cleaned for Apollo 15 and subsequent spacecraft. | Apollo 12 | MSC-02680 |
| 10 | Electrical circuit interrupter leaked gas when it operated prior to CM/SM separation. | CSM-109 | O-ring displacement greater than normal. Not detrimental. | None required. | Apollo 13 | MSC-02680 |
| 11 | Supercritical helium pressure rise rate was greater than expected during CDDT. | LM-7 | Probable degradation of tank insulation due to annular vacuum contamination. | Screening test was added to supplement normal testing for Apollo 14, 15 and 16 tanks. For new tanks, gasses removed from vacuum jacket periodically analyzed for contaminants during manufacturing. | Apollo 13 | MSC-02680 |
| 12 | The crew heard a "thumping" noise and saw snowflakes venting from quadrant 4 during transearth flight. | LM-7 | Probable electrolyte leakage in battery 2 resulting in the battery lid being blown off. | Descent batteries, ascent batteries, new service module battery, and lunar surface drill battery were modified for Apollo 14 and subsequent missions. The design of other Apollo batteries was considered safe. | Apollo 13<br>Apollo 14 | MSC-02680 |
| 13 | Descent battery 2 malfunction light illuminated. | LM-7 | False indication. Temperature switch wires possibly shorted to ground by electrolyte, or auxiliary relay possibly contaminated in electrical control assembly. | Corrective action taken to prevent electrolyte leakage (see item 12). | Apollo 13 | MSC-02680 |

APOLLO 13

| Anomaly No. | Anomaly Statement | Vehicle/ Equipment | Cause | Corrective Action | Missions | References |
|---|---|---|---|---|---|---|
| 14 | Pressure in ascent stage oxygen tank 2 increased, indicating reverse leakage from manifold into tank. | LM-7 | Shutoff valve leaked, probably caused by O-ring damage during assembly or contaminated valve seat. Leak tests were inadequate. | Valves tested for both forward and reverse leakage at high and low pressures. | Apollo 13 | MSC-02680 |
| 15 | Left-hand window shade was cracked. | LM-7 | Aclar covering was not sufficiently ductile. | Shades fabricated from improved Aclar and reinforced with Mylar before stitching. | Apollo 13 | MSC-02680 |
| 16 | Bumper separated from 10-mm lens of lunar module 16-mm camera. | GFE | Insufficient friction between mating surfaces. | Mating surface of bumper swaged. | Apollo 13 | MSC-02680 |
| 17 | Set knob came off of interval timer. | GFE | Gripping compound used to secure set screw did not provide sufficient retention force. | Knob secured with roll pin. | Apollo 13 | MSC-02680 |
| 18 | Nasal spray bottles were difficult to use. | GFE | Packaging did not permit satisfactory operation in flight | Packaging method changed. | Apollo 13 | MSC-02680 |

APOLLO 14

| Anomaly No. | Anomaly Statement | Vehicle/ Equipment | Cause | Corrective Action | Missions | References |
|---|---|---|---|---|---|---|
| 1 | Six attempts were required to achieve docking probe capture latch engagement during translunar docking. | CSM-110 | Most probably, either foreign material interfered with the operation of the capture latch mechanism, or the translation cam jammed. | Several changes were made to prevent foreign material from getting into the probe mechanism, including a cover to be used prior to flight. Also, the translation cam assembly was modified and tests were added. | Apollo 14 | MSC-04112<br>MSC-05101 |
| 2 | High-gain antenna tracking was difficult several times during translunar coast and lunar orbit. | CSM-110 | A five- to eight-degree boresight shift of wide beam was possibly caused by faulty coaxial cable connector or shock from SLA separation. | Connectors reworked and inspection procedures tightened. Thermal acceptance test performed while antenna radiating and under operating conditions. | Apollo 12<br>Apollo 13<br>Apollo 14<br>Apollo 16 | MSC-04112 |
| 3 | Urine dump nozzle was obstructed several times during mission. | CSM-110 | Freezing of nozzle probably caused obstruction. Differen purge and dry procedures and colder nozzle conditions could have caused freezing. | Procedural changes. | Apollo 14 | MSC-04112 |
| 4 | VHF communications between CSM and LM were degraded prior to lunar lift-off and during rendezvous. | CSM-110<br>LM-8 | System operating near range limits. | Receiver AGC measurements added to CSM and LM to study problem. Crew training expanded to include effects of weak signal strengths. | Apollo 14 | MSC-04112 |
| 5 | Entry monitor system 0.05g light did not illuminate at proper time. | CSM-110 | Crew's view of light was obstructed by neutral density filter. | Clear glass simulator filter replaced with silvered flight unit. Filter repositioned for entry on subsequent flights. | Apollo 13<br>Apollo 14 | MSC-04112 |

APOLLO 14

| Anomaly No. | Anomaly Statement | Vehicle/ Equipment | Cause | Corrective Action | Missions | References |
|---|---|---|---|---|---|---|
| 6 | Main bus A remained energized when main bus-tie switches were placed in the "off" position at 800 feet. | CSM-110 | Motor-driven switch did not operate because motor stalled as a result of contamination of commutator. | Switch response time checked for Apollo 15 and subsequent spacecraft, and bad switches replaced if necessary. | Apollo 14 | MSC-04112<br>MSC-05242 |
| 7 | Main bus B - battery C circuit breaker contact was intermittent. | CSM-110 | Contacts did not make because of glass particles on contact surface. | None required. | Apollo 14 | MSC-04112<br>MSC-05814 |
| 8 | Food preparation unit leaked momentarily after hot water was dispensed. | CSM-110 | Stroke time of valve assembly was slow because of dimensional interference between the cylinder and piston at higher temperatures. | Hot water explusion tests conducted on Apollo 15 and subsequent spacecraft. | Apollo 12<br>Apollo 14 | MSC-04112<br>MSC-04751 |
| 9 | Rapid repressurization system required recharging in addition to normal rechargings. | CSM-110 | Fill valve was closed before system was fully charged. Leakage rate was not excessive. | Crews briefed on recharging techniques for other-than-normal rechargings. | Apollo 14 | MSC-04112 |
| 10 | Ascent battery 5 voltage decreased. | LM-8 | Possible short between plates of battery cell, short from cell to case, or external battery load. | Stricter inspection and improved procedures used for plug installation and assembly of cell plates. Test added at launch site to measure parasitic loads prior to battery installation. | Apollo 12<br>Apollo 14 | MSC-04112<br>MSC-05257 |
| 11 | Abort command was set in computer although abort switch had not been depressed. | LM-8 | Probable metallic contamination within abort switch module. | All switches of this type replaced with switches screened by X-ray and vibration. Circuit modified to eliminate single-point failures. Primary guidance computer software modified. | Apollo 14 | MSC-04112 |
| 12 | S-band steerable antenna operation was intermittent. | LM-8 | Undetermined. | Incidental amplitude modulation of uplink signal minimized for Apollo 15 and subsequent missions. | Apollo 11<br>Apollo 14<br>Apollo 15 | MSC-00171<br>MSC-04112<br>MSC-07505 |
| 13 | Landing radar system switched scales and initial slant range indication was high. | LM-8 | Switching to low-scale range was caused by turning on radar too soon. Initial slant range reading was caused by side lobe lock-on. | Wiring modification made to enable holding system in high-scale while in antenna position 1. Low-scale switching enabled in position 2. Position 2 automatically selected at high gate. | Apollo 14 | MSC-04112 |
| 14 | Abort guidance system failed during rendezvous braking phase. | LM-8 | Failure could have been caused by any of 27 components in the +4-volt logic power supply, the sequencer, or the interconnections between the two modules. | Design, manufacturing, testing and installation methods considered adequate. No corrective action required. | Apollo 14 | MSC-04112 |
| 15 | Glass cracked on data entry and display assembly. | LM-8 | Possible internal stress in glass, improper mounting, or glass was inadvertently hit. | Clear plastic tape applied to glass similar to mission timer windows. | Apollo 14 | MSC-04112 |
| 16 | Lunar topographic camera malfunctioned. | GFE | Transistor in shutter control circuit was shorted, causing continuous shutter operation and tearing sprocket holes in shutter curtain. | None. Screening and tests considered adequate. | Apollo 14 | MSC-04112 |

APOLLO 14

| Anomaly No. | Anomaly Statement | Vehicle/ Equipment | Cause | Corrective Action | Missions | References |
|---|---|---|---|---|---|---|
| 17 | Lunar Module Pilot's right glove pulled to the left and down during the second EVA. | GFE | Glove wrist-control cable system design inherently allows glove to take various neutral positions. | None. | Apollo 14 | MSC-04112 |
| 18 | Intervalometer double-cycling occurred 13 times out of 283 exposures. | GFE | Intervalometer responded to random pulses from motor current. | None. Condition does not degrade photography. | Apollo 14 | MSC-04112 |
| 19 | Communications with Commander were intermittent. | GFE | Condition was corrected when constant wear garment electrical adapter was replaced with spare unit. No abnormalities found postflight. | None. | Apollo 14 | MSC-04112 |
| 20 | Active seismic experiment thumper misfired five times. | ALSEP | Selector switch dial may not have been held in position by detent, and firing switch may have been contaminated by dust. | Detent mechanism redesigned and dust protection added. | Apollo 14 | MSC-04112 |
| 21 | Transmission of operate-select command to suprathermal ion detector resulted in noisy data from three experiments. | ALSEP | Probable arcing or corona within suprathermal ion detector equipment prior to dust cover removal. | Operation prior to dust cover removal limited to minimum "on" time for Apollo 15 (last mission for experiment). | Apollo 14 | MSC-04112 |
| 22 | Lunar portable magnetometer cable was difficult to rewind. | ALSEP | No provision for locking reel during rewind. Gripping reel and crank was difficult with gloved hand. | Ratchet and pawl locking device, and better grip for reel and crank added for Apollo 16 (not carried on Apollo 15). | Apollo 14 | MSC-04112 |
| 23 | Central station 12-hour timer pulses did not occur after initial activation. | ALSEP | Mechanical section of timer did not drive switches. Loss of timer has no adverse effect on experiments. | Solid-state timer used for Apollo 15 and subsequent missions. | Apollo 12<br>Apollo 14 | MSC-04112 |
| 24 | Y-axis leveling of passive seismic experiment was intermittent. | ALSEP | Probable intermittent operation of a component in the motor control circuit. | None. | Apollo 14 | MSC-04112 |
| 25 | Long-period vertical seismometer of passive seismic experiment was unstable when operated with the feedback filter in. | ALSEP | Unknown. | None. Satisfactory data obtained by operating experiment in filter-out mode. | Apollo 14 | MSC-04112 |
| 26 | Active seismic experiment geophone 3 data showed intermittent spikes to off-scale high during high-bit-rate listening mode. | ALSEP | Probable open in positive-going diode-wired transistor in the logarithmic compressor for geophone 3. | None. | Apollo 14 | MSC-04112<br>MSC-07638 |
| 27 | Suprathermal ion detector data was intermittently erroneous. | ALSEP | Probable intermittent component or wire connection resulting in an intermittent failure of the start reset pulse for the positive log A/D converter control logic. | None. Apollo 15 is last mission for experiment. | Apollo 14 | MSC-04112 |
| 28 | Charged particle lunar environment experiment analyzer B data lost. | ALSEP | Probable short to ground in the analyzer B power supply filter, the analyzer, or the interconnections between the two. | None. Experiment was not carried after Apollo 14. | Apollo 14 | MSC-04112 |

APOLLO 15

| Anomaly No. | Anomaly Statement | Vehicle/ Equipment | Cause | Corrective Action | Missions | References |
|---|---|---|---|---|---|---|
| 1 | Service module reaction control system propellant isolation valves closed. | CSM-112 | Latching magnets may have been partially degaussed during preflight tests by application of reverse voltage to coils. | Magnetic latching force tests performed prior to flight for Apollo 16 and subsequent spacecraft. | Apollo 9<br>Apollo 11<br>Apollo 12<br>Apollo 14<br>Apollo 15 | MSC-05161 |
| 2 | Water panel chlorine injection port leaked. | CSM-112 | Insufficient septum compression. Septum retention insert was loosened when cap was removed. | Shim added under insert shoulder and installation torque increased for Apollo 16 and subsequent spacecraft. | Apollo 15 | MSC-05161 |
| 3 | Service propulsion system thrust light illuminated when no engine firing command was present. | CSM-112 | Loose strand of wire within delta-V thrust switch probably caused a short to ground. | New screening procedures used for critical switches on Apollo 16 and subsequent spacecraft. | Apollo 15 | MSC-05161 |
| 4 | Integral lighting circuit breaker opened. | CSM-112 | Input filter capacitor in lower-equipment-bay mission timer was shorted. | Fuses added to units for Apollo 16 and 17 spacecraft. | Apollo 15 | MSC-05161 |
| 5 | Battery relay bus voltage reading was low (13.66 volts versus 32 volts). | CSM-112 | Instrumentation problem. Exact cause not determined. | None. Isolated case and other measurements available. | Apollo 15 | MSC-05161 |
| 6 | Mass spectrometer boom did not fully retract on five of twelve occasions. | CSM-112 | Cable probably jammed in boom housing during retraction. | The following changes were made for Apollo 16:<br>1. The mechanism was modified.<br>2. A proximity switch was added to indicate retraction to within 1-foot of full retraction.<br>3. A thermal-vacuum test was added. | Apollo 15<br>Apollo 16 | MSC-05161 |
| 7 | Potable water tank failed to refill. | CSM-112 | Check valve between fuel cell and waste tank dump leg leaked. A small piece of wire was found between polymer umbrella and seating surface. | None. Isolated case. If problem recurs, potable water tank will fill when waste water tank is full. | Apollo 15 | MSC-05161 |
| 8 | Panel 2 mission timer stopped. | CSM-112 | Probable intermittent component which healed itself. | None. Time can be obtained from other timer or Mission Control Center. | Apollo 11<br>Apollo 12<br>Apollo 15 | MSC-05161 |
| 9 | One main parachute collapsed at 6000 feet altitude. | CSM-112 | Raw fuel expelled during depletion firing became ignited and damaged the parachute riser and suspension lines. | Propellant load biased to provide slight excess of oxidizer. Propellant depletion firing eliminated. Suspension line connector link material changed. | Apollo 4<br>Apollo 15<br>Apollo 16 | MSC-05161<br>MSC-05805 |
| 10 | Data recorder tape deteriorated. | CSM-112 | Scratched recorder heads damaged tape. | Removable head covers provided to prevent handling damage during installation. | Apollo 15 | MSC-05161 |
| 11 | Seconds digit of digital event timer became obscured. | CSM-112 | Elongation of idler gear bearing points allowed shaft to tilt and caused gear to scrape paint from number wheel. | Units inspected visually for signs of wear and paint flakes. | Apollo 10<br>Apollo 15<br>Apollo 16 | MSC-05161 |
| 12 | Crew restraint harness came apart on center and right couches. | CSM-112 | Plug-and-cap assemblies that attach restraint harnesses to couch seat came apart. | Thread locking sealant used to prevent unscrewing of plug and cap. | Apollo 15 | MSC-05161 |

APOLLO 15

| Anomaly No. | Anomaly Statement | Vehicle/ Equipment | Cause | Corrective Action | Missions | References |
|---|---|---|---|---|---|---|
| 13 | Loose object was striking blades of cabin fan. | CSM-112 | A 1/4-inch washer was found in the ducting after the flight. The washer could have drifted in and out of the fan outlet during flight. | None. No detrimental effects. | Apollo 8<br>Apollo 15<br>Apollo 16 | MSC-05161 |
| 14 | Visability through scanning telescope was not adequate to identify constellations. | CSM-112 | Condensation was probably present on the eyepiece window and on prisms in the removable eyepiece. | Heater was added to removable eyepiece. | Apollo 15 | MSC-05161 |
| 15 | Roll axis did not align properly when gyro display alignment pushbutton was pressed. | CSM-112 | Possible contamination between slip-rings and thumb wheel resolvers in attitude set control panel, or contamination of either of two "golden-g" relays in gyro display coupler. | Attitude set control panel resolvers wiped clean by rotating them, or replaced if necessary. Gyro display coupler and electronic display assembly replaced on Apollo 16 as a result of reevaluation of all devices used in stabilization and control system. | Apollo 15 | MSC-05161 |
| 16 | Circuit breaker supplying main bus A power to battery charger could not be opened manually during postflight testing. | CSM-112 | Corrosion on indicator stem prevented operation. Corrosion could have been caused by sea water, urine or sweat. | None. | Apollo 15 | MSC-05161 |
| 17 | Toggle-arm pivot pin for side-A shutoff valve of main oxygen regulator was sheared. | CSM-112 | Improper shimming allowed pivot pin to come out of one side of cam holder. Pin failed in single shear and bending. | New inspection criteria developed to assure proper assembly of valves. | Apollo 15 | MSC-05161 |
| 18 | Crew optical alignment sight fell off stowage mount during landing. | CSM-112 | Locking pin did not engage because the ramp which moves the pin into the locking position was gouged. | New fit checks used to assure proper operation of latching mechanism. AOH and crew checklists changed to include verification of latching pin engagement. | Apollo 15 | MSC-05161 |
| 19 | Water/glycol pump differential pressure fluctuated after cabin depressurizations for standup EVA and second EVA. | LM-10 | Condensation on water/glycol sensing lines froze and sublimed at cabin depressurization. This froze the fluid in the lines, causing the indications. | None. System operation not affected. | Apollo 15 | MSC-05161 |
| 20 | Water separator speed decreased during cabin depressurization for standup EVA. | LM-10 | Condensation on outside of line between water separator pitot tube and water management system froze and sublimed at cabin depressurization. This froze the water in the line, causing the separator to slow down because of excessive water. | None. System not damaged from freezing, and other separator can be used. | Apollo 15 | MSC-05161 |
| 21 | Water gun/bacteria filter quick disconnect broke. | LM-10 | Improper stowage caused excessive force to be applied to quick disconnect by bending hose. | Plastic parts replaced by steel inserts in all applications of quick disconnect in lunar module and command module. | Apollo 15 | MSC-05161 |
| 22 | Interruption of S-band steerable antenna tracking prior to powered descent. | LM-10 | Unexplained. | No additional corrective action taken (see Apollo 14). | Apollo 11<br>Apollo 12<br>Apollo 14<br>Apollo 15 | MSC-05161<br>MSC-07505 |
| 23 | Descent engine control assembly circuit breaker was open when checked after lunar module separation. | LM-10 | Breaker was probably left open by crew. | None. | Apollo 15 | MSC-05161 |

APOLLO 15

| Anomaly No | Anomaly Statement | Vehicle/ Equipment | Cause | Corrective Action | Missions | References |
|---|---|---|---|---|---|---|
| 24 | Abort guidance system warnings and master alarms occurred after insertion into lunar orbit and prior to lunar module deorbit. | LM-10 | Probably caused by EMI from test mode fail buffer momentarily turning on test mode fail driver. This could have latched the master alarm and abort guidance sytem warning light on. | Low side of input to buffer grounded to suppress noise feedback. | Apollo 15 | MSC-05161 |
| 25 | No line-of-sight rate data on Commander's crosspointers during rendezvous braking. | LM-10 | The most probable cause was an open in the rendezvous radar signal return line. | None. All-up thermal/vacuum test of each spacecraft would be required to detect this type of defect. | Apollo 15 | MSC-05161 |
| 26 | Range/range-rate meter window broke prior to crew ingress. | LM-10 | Surface flaw in glass probable existed which was deeper than threshold depth of glass operating stress. | Glass doubler added. Other spacecraft glass applications reviewed and appropriate corrective measures taken where required. | Apollo 15 | MSC-05161 |
| 27 | Panoramic camera velocity/altitude sensor did not provide proper control for camera. | SIM | Problem related to optical signal-to-noise ratio. | Optical signal enhanced by increasing lens aperature and deleting infrared filter. Optical noise reduced. Manual override of velocity/altitude sensor provided. | Apollo 15 | MSC-05161 |
| 28 | Laser altimeter altitude data became intermittent after revolution 24 and no altitude data were obtained after revolution 38. | SIM | The intermittent condition was caused by a decrease in laser output power. The fault was not determined. | Automatic power compensation circuit added to maintain power output at adequate level. Relay which was source of EMI was removed from remaining flight altimeters. | Apollo 15<br>Apollo 16 | MSC-05161<br>MSC-07230 |
| 29 | Mapping camera extension and retraction times were longer than normal and camera would not retract after 15th (last) extension. | SIM | Undetermined. | Dry film lubricant on lead screw replaced with wet film silicone grease and oil mixture. Number of extend/retract operations reduced. | Apollo 15<br>Apollo 16<br>Apollo 17 | MSC-05161<br>JSC-07954 |
| 30 | Gamma ray spectrometer experienced gain shift and temporary spectrum zero reference shift. | SIM | Gain shift caused by aging of photomultiplier tube in gamma ray detector assembly due to high cosmic ray flux rates. Zero shift probably caused by open or short within pulse height analyzer. | Apollo 16 spectrometer aged prior to flight at expected flux rates. No corrective action taken for zero reference shift. | Apollo 15 | MSC-05161 |
| 31 | Lunar surface drilling problems: | ALSEP | | | | |
| | a. Penetration to full depth with bore stems not achieved. | | a. Reduced depth of flutes at joints caused binding of stems. | a. Bore stem joints redesigned to allow continuous flutes. | Apollo 15 | MSC-05161 |
| | b. Releasing bore stems from drill adapter was difficult. | | b. Lunar soil did not hold bore stem stationary and core stem wrench did not fit bore stems properly. | b. Wrench provided that fits both core stems and bore stems. Bore stem/drill adapter eliminated. | Apollo 15 | MSC-05161 |
| | c. Bore stem damaged near first joint. | | c. Up-and-down movement of drill separated first joint. | c. Bore stem joints redesigned. | Apollo 15 | MSC-05161 |
| | d. Core stem difficult to remove from drilled hole. | | d. Friction from compacted material in flutes. | d. Mechanical extraction device provided. | Apollo 15 | MSC-05161 |
| | e. Core stem sections difficult to separate. | | e. Holding vise was mounted backward on LRV pallet. Installation drawing in error. | e. Installation drawing corrected. | Apollo 15 | MSC-05161 |

APOLLO 15

| Anomaly No. | Anomaly Statement | Vehicle/ Equipment | Cause | Corrective Action | Missions | References |
|---|---|---|---|---|---|---|
| 32 | Central station rear curtain retainer removal lanyard broke. | ALSEP | Force required to remove pins was greater than expected. | Lanyard material changed from 50-pound test to 180-pound test. | Apollo 15 | MSC-05161 |
| 33 | Universal handling tool did not lock in place in suprathermal ion detector fitting. | ALSEP | Fitting in awkward position for inserting and locking tool. | None. Last mission for experiment. | Apollo 15 | MSC-05161 |
| 34 | Ground-commanded television could not be elevated as unit approached limits of travel. | GFE | Elastomer clutch facing material degraded under operating conditions. | Clutch design changed and clutch torque increased. | Apollo 15 | MSC-05161 |
| 35 | Lunar communications relay unit downlink signal lost after lunar module ascent. | GFE | Current capacity of 7.5-ampere LRV circuit breaker was degraded because of elevated temperatures. | A 10-ampere circuit breaker was substituted for the 7.5-ampere circuit breaker. A manual switch was added to allow overriding of the LRV circuit breaker after the final EVA. The lunar communications relay unit was modified so that the internal 7.5-ampere circuit breaker is bypassed when operating in the external power mode. | Apollo 15 | MSC-05161 |
| 36 | Lunar surface 16-mm camera magazine jammed. | GFE | Tape on camera caused mismating of magazines and camera. Excessive manual advancement of film depleted film loops. | Crew training improved. Tape flagged for removal. | Apollo 15 | MSC-05161 |
| 37 | Lunar surface 70-mm camera stopped at end of second EVA. | GFE | Two set screws in drive pinion were slipping on motor shaft. | Flats ground on motor shaft. Locking compound used on set screws. | Apollo 15 | MSC-05161 |
| 38 | Water was difficult to obtain from insuit drinking device. | GFE | Devices were not properly positioned within the suits. | Additional crew training given in making position adjustments. | Apollo 15<br>Apollo 16 | MSC-05161 |
| 39 | Oxygen purge system antenna broke. | GFE | Inadvertent flexure and contact. | Protective cover provided to protect antenna while stowed and during unsuiting. Antenna not deployed until after egress. | Apollo 15<br>Apollo 16 | MSC-05161 |
| 40 | Retractable tethers failed. | GFE | Spring expanded and jammed after no-load release. Knots untied allowing cord to retract into housing. | Knots changed and crew training improved. | Apollo 15<br>Apollo 16 | MSC-05161 |
| 41 | Deployment saddle was difficult to release from vehicle. | LRV | Vehicle was tilted, causing stress preloading of vehicle/saddle interface. | Crew training improved. | Apollo 15 | MSC-05161 |
| 42 | Battery 2 volt/ammeter was inoperative. | LRV | Unknown. | None. | Apollo 15 | MSC-05161 |
| 43 | Front steering system was inoperative upon vehicle activation and during first EVA. | LRV | Possible motor/gear train assembly binding. | Flight unit replaced by spare unit and hand-controller-commanded tests run for Apollo 16. | Apollo 15<br>Apollo 16 | MSC-05161<br>MSC-07230<br>MSC-07683 |

APOLLO 15

| Anomaly No. | Anomaly Statement | Vehicle/ Equipment | Cause | Corrective Action | Missions | References |
|---|---|---|---|---|---|---|
| 44 | Seat belt problems: | LRV | | | | |
| | a. Belt hooks slipped through handholds when not in use. | | a. Belts not sufficiently stiff. | a. Stiffer belts provided. | Apollo 15 | MSC-05161 |
| | b. Belts snagged on GSE connector when displaced from proper stowage locations. | | b. Belts not sufficiently stiff. | b. Stiffer belts provided. | Apollo 15 | MSC-05161 |
| | c. Belts not long enough to secure hooks to outboard handholds easily. | | c. Conformance of suits to seated position was not as close as expected. | c. Overcenter tightening mechanism provided. | Apollo 15 | MSC-05161 |

APOLLO 16

| Anomaly No. | Anomaly Statement | Vehicle/ Equipment | Cause | Corrective Action | Missions | References |
|---|---|---|---|---|---|---|
| 1 | Water/glycol temperature control circuit failed in the automatic mode. | CSM-113 | Crack in output silicon-controlled rectifier used in temperature controller caused rectifier to self-gate on and remain on, resulting in secondary failure of feedback capacitor. | All remaining controllers tested for forward breakdown voltage, although test is not conclusive. If problem reoccurs, manual control is satisfactory. | Apollo 11<br>Apollo 16 | MSC-07230<br>MSC-07598 |
| 2 | SPS oxidizer tank pressure measurement shifted upward. | CSM-113 | Pressure transducer reference cavity leaked. | Transducers replaced after altitude chamber testing vacuum checked prior to installation. Redundant devices added for critical measurements on Apollo 17 and subsequent spacecraft. | Apollo 16 | MSC-07230 |
| 3 | Computer issued gimbal lock indication when no gimbal lock condition existed. | CSM-113 | Probably caused by voltage transient from contact bounce of thrust vector enable relay. | Filter added across primary of transformer in digital-to-analog converter portion of coupling data unit. | Apollo 16 | MSC-07230 |
| 4 | Inertial subsystem warnings and coupling data unit fail indications occurred during transearth flight. | CSM-113 | Conductive contaminant in diode located in fail detect circuit of coupling data unit probably caused false indications. | None. No hazard to crew if defect reoccurs in this and other applications of diode in guidance system. | Apollo 16 | MSC-07230<br>MSC-07571 |
| 5 | Heat leak into hydrogen tank 3 was abnormally high early in mission. | CSM-113 | Ambient air probably leaked into insulation vacuum annulus during boost. | None. Preflight procedures and inspection of tanks considered adequate. | Apollo 12<br>Apollo 16 | MSC-07230 |
| 6 | Spacecraft did not respond to uplink real-time commands twice. | CSM-113 | Undetermined. | None. If condition occurs again, normal operation can be restored by cycling up-telemetry command reset switch. | Apollo 9<br>Apollo 16 | MSC-07230 |
| 7 | Chlorine ampule leaked during one of the daily water system chlorinations. | CSM-113 | Teflon bladder was probably pinched between base plate and sidewall of ampule. | Ampules checked for bladder adhesion to sidewall. Entrapped air removed to reduce bladder expansion. | Apollo 16 | MSC-07230 |
| 8 | Mass spectrometer would not fully retract and finally stalled two-thirds out. | CSM-113 | Initial stalls were probably caused by jamming of cable in boom housing. Final stall was probably caused by inoperative motor due to previous stalling with motor on. | None. Failure cause not applicable to Apollo 17 and subsequent spacecraft. | Apollo 15<br>Apollo 16 | MSC-07230 |

APOLLO 16

| Anomaly No. | Anomaly Statement | Vehicle/ Equipment | Cause | Corrective Action | Missions | References |
|---|---|---|---|---|---|---|
| 9 | Gamma ray spectrometer boom would not fully retract. | CSM-113 | Cable probably jammed in boom housing during retraction. | None. Failure cause not applicable to Apollo 17 and subsequent spacecraft. | Apollo 15<br>Apollo 16 | MSC-07230 |
| 10 | Oscillations of service propulsion engine gimbal yaw actuator occurred when secondary servo loop was selected. | CSM-113 | Open in rate feedback loop of secondary yaw servo system. Open was possibly caused by cable flexing. | Routing of cable harness to actuator assembly changed to provide strain relief and prevent flexing. | Apollo 16 | MSC-07230 |
| 11 | Cabin fans made a loud "moaning" sound. | CSM-113 | An object probably got into the fan and was later freed. | None. | Apollo 8<br>Apollo 15<br>Apollo 16 | MSC-07230 |
| 12 | Suit pressure transducer reading was higher than normal during transearth EVA. | CSM-113 | Lunar dust particle was found in transducer. It may have caught in air gap of variable reluctance element. | Five-micron filter added in suit pressure sense line for Apollo 17 and subsequent spacecraft. | Apollo 16 | MSC-07230 |
| 13 | Digital event timer indicated erroneous time. | CSM-113 | Bearing points in magnesium motor plates became elongated by wear, permitting idler gear to rub against number wheel. Paint particles from number wheel interfered with proper counting. | Units visually inspected for Apollo 17. Skylab units to be modified if cases require opening for other rework. | Apollo 10<br>Apollo 15<br>Apollo 16 | MSC-07230 |
| 14 | Scanning telescope shaft axis drove erratically. | CSM-113 | Broken socket spring in telescope harness connector. | Apollo 17 harness inspected for broken springs. New harnesses to be manufactured for Skylab spacecraft. | Apollo 16 | MSC-07230<br>MSC-07573 |
| 15 | Two lithium hydroxide canisters stuck in side B when being removed. | CSM-113 | Canister expansion from moisture buildup was greater than normal during solo flight because suit control valves were positioned to full flow. Also, the side-B fit was tighter than that of side A. | Removal force specification changed. Flight procedures changed to insure that suit control valves are positioned to cabin flow for solo operations. | Apollo 16 | MSC-07230 |
| 16 | High-gain antenna could not be acquired for approximately 1 1/2 hours while spacecraft was in passive thermal control and crew was asleep. | CSM-113 | Undetermined. Possible logic circuit malfunction. | None. If problem was in electronics box, it has a low probability of recurring. Also, secondary unit can be selected. | Apollo 12<br>Apollo 13<br>Apollo 14<br>Apollo 16 | MSC-07230 |
| 17 | Extending and locking Y-Y strut in preparation for entry was difficult. | CSM-113 | Insufficient clearance. | None. AOH has inflight procedure for strut adjustment. | Apollo 16 | MSC-07230 |
| 18 | One of recovered main parachutes had numerous small holes in canopy. | CSM-113 | RCS yaw engines were fired at 350 feet altitude to vent trapped propellants and pressure. Holes were caused by oxidizer expelled from plus yaw engines. | Command module landed with RCS pressurized and propellant isolation valves closed. | Apollo 4<br>Apollo 15<br>Apollo 16 | MSC-07230<br>MSC-07641 |
| 19 | Water/glycol found on command module floor during postflight operations. | CSM-113 | Fiber under two O-ring seals in suit heat exchanger bypass valve. | Bypass valve, B-nut connections, and cabin floor inspected for leak prior to launch. | Apollo 16 | MSC-07230 |

APOLLO 16

| Anomaly No. | Anomaly Statement | Vehicle/ Equipment | Cause | Corrective Action | Missions | References |
|---|---|---|---|---|---|---|
| 20 | Scrubber tank of decontamination unit failed during postflight deactivation of reaction control system. | GSE | Rapid overpressurization of tank occurred because of insufficient quantity of neutralizer for the quantity of oxidizer. | Decontamination procedure changed. Control of procedure and paperwork formalized. Deactivation/Decontamination Manager appointed. | Apollo 16 | MSC-07230 |
| 21 | Two reaction control system regulator inlet filter screens were deformed. | CSM-113 | Filter element end caps were bulged by helium pressure surge during system activation. | None required. | Apollo 16 | MSC-07230<br>MSC-07640 |
| 22 | Thermal coating peeled away from ascent stage thermal shield panels. | LM-11 | Coating was not compatible with the thermal conditions experienced. | Coating was removed from Apollo 17 spacecraft because adequate thermal protection was provided by tank insulation. | Apollo 16 | MSC-07230 |
| 23 | Four thermal shields were torn loose from ascent stage aft equipment rack. | LM-11 | Probably caused by insufficient venting of thermal blanket during earth launch, and ascent engine exhaust entering cavity behind thermal shields during ascent from lunar surface. | Thermal shield configuration changed. Additional venting of thermal blankets provided. | Apollo 16 | MSC-07230 |
| 24 | S-band steerable antenna would not move in yaw axis. | LM-11 | Stow latch mechanism did not release antenna. Exact cause unknown. | Exposed solder fillet removed from stow latch mechanism. Inspection and checkout procedures improved. Wiring added to provide redundant paths through safe/arm switch to solder melting elements. | Apollo 16 | MSC-07230 |
| 25 | Reaction control system A helium regulator leaked. | LM-11 | Most probably caused by contamination introduced during component replacement and, subsequently, swept into regulator outlet by backflow. | No components replaced downstream of Apollo 17 regulators. Changes made to launch site testing to eliminate regulator backflow. | Apollo 16 | MSC-07230 |
| 26 | Cabin gas return valve apparently failed to open in "automatic" position. | LM-11 | Probably caused by contamination on inlet screen or on flapper valve. | Test added to preflight checkout of Apollo 17 spacecraft. | Apollo 16 | MSC-07230 |
| 27 | Control of ascent stage attitude lost after jettison. | LM-11 | The most likely cause was an open circuit breaker which provides 28 volts to the primary preamplifiers. It either did not make contact or was inadvertently left open. | None required. | Apollo 16 | MSC-07230 |
| 28 | Abort guidance system out-of-plane error was larger than expected. | LM-11 | The most likely cause was contamination or an air bubble in the fluid between the gyro float and case. | Abort sensor assembly installed in Apollo 17 spacecraft checked for contamination and air bubbles. | Apollo 16 | MSC-07230 |
| 29 | Indicated ascent engine chamber pressure showed two temporary rises above normal. | LM-11 | Indications caused by characteristics of pressure transducer. | None required. | Apollo 16 | MSC-07230 |
| 30 | Command module television camera monitor lost horizontal synchronization twice. | GFE | Caused by either an intermittent condition in precision voltage regulator circuit assembly in low-voltage power supply, or shift in stable range of horizontal potentiometer setting. | Low-voltage power supply voltage regulators replaced on remaining flight units. Warm optimum setting marks applied to TV monitor case. | Apollo 16 | MSC-07230<br>MSC-07489 |

APOLLO 16

| Anomaly No. | Anomaly Statement | Vehicle/ Equipment | Cause | Corrective Action | Missions | References |
|---|---|---|---|---|---|---|
| 31 | Oxygen purge system antenna broke. | GFE | Antenna inadvertently left unstowed during ingress, and probably struck ascent engine cover. | Spare antenna stowed on lunar rover for Apollo 17. | Apollo 15 Apollo 16 | MSC-07230 |
| 32 | Experimental gas/water separator was cracked and leaked. | GFE | Unit was made for demonstration purposes and material was highly susceptible to cracking. | None. Device not flown on subsequent missions. | Apollo 16 | MSC-07230 |
| 33 | Wrist disconnects were hard to rotate after exposure to lunar surface environment. | GFE | Lunar dust got between sliding surfaces. | Rubber dust covers added for Apollo 17. | Apollo 16 | MSC-07230 |
| 34 | Headset microphone boom tip was loose. | GFE | Insufficient adhesive applied when tip was installed on acoustical tube. | Pull test added to assure adequate attachment. | Apollo 16 | MSC-07230 |
| 35 | Headset earphone operation was intermittent. | GFE | Electrical adapter 21-pin connector was probably not seated securely. | None. | Apollo 16 | MSC-07230 |
| 36 | Retractable tether would not fully retract. | GFE | Thread sealant on spool shaft increased friction. | Units tested for friction buildup prior to flight. | Apollo 15 Apollo 16 | MSC-07230 |
| 37 | Pressure indicated by cuff gage was low during transearth EVA. | GFE | Contaminant may have temporarily caused resistance in mechanism movement, or gage may have been misread. | None required. | Apollo 16 | MSC-07230 |
| 38 | Extravehicular mobility unit maintenance kit expanded. | GFE | Wet-wipe packets expanded in cabin environment. | Some variation in expansion can be expected. Apollo 17 crew briefed. | Apollo 16 | MSC-07230 |
| 39 | Pressure garment assembly purge valve pin came out on three occasions. | GFE | Pin was probably pulled out by red apple on lanyard snagging on lunar rover lap belt. | Purge valve assembly modified by eliminating barrel actuator spring and shortening lanyard. | Apollo 16 | MSC-07230 |
| 40 | Tool carrier fell off portable life support system during EVA preparations. | GFE | Snap buckle release pin was inadvertently pulled. | Pin pull force increased from 5 lb to between 10 and 20 lb. | Apollo 16 | MSC-07230 |
| 41 | Lunar Module Pilot's watch crystal came out during lunar surface activity. | GFE | Warpage of crystal from thermal cycling caused it to pop out. | None. Watch not critical to mission success or crew safety. | Apollo 16 | MSC-07230 |
| 42 | Cable broke on heat flow experiment. | ALSEP | Ribbon cable became entangled with crewman's feet and was pulled loose at central station connector. | Connector was modified to provide strain relief and greater pull strength for Apollo 17. | Apollo 16 | MSC-07230 |
| 43 | One of four stakes on active seismic experiment mortar package pallet did not deploy. | ALSEP | Release pin was bent and jammed. | None. Experiment not scheduled for subsequent mission. | Apollo 16 | MSC-07230 |
| 44 | Telemetry indication of active seismic experiment mortar box roll angle was off-scale high. | ALSEP | Sensor circuit failure. Other data indicated that alignment was satisfactory. | None. Experiment not scheduled for subsequent mission. | Apollo 16 | MSC-07230 |
| 45 | Cosmic ray detector panel shade did not fully deploy and lanyard broke. | Lunar surface experiment | Insufficient clearance between stationary blockplate and movable target plate because of projecting screws. | None. Experiment not scheduled for subsequent mission. | Apollo 16 | MSC-07230 |

APOLLO 16

| Anomaly No. | Anomaly Statement | Vehicle/ Equipment | Cause | Corrective Action | Missions | References |
|---|---|---|---|---|---|---|
| 46 | Vertical staff of gnomon separated from leg assembly. | Lunar surface experiment | The most probable cause was breaking of the inner gimbal pivot pins. | Pivot pins for the Apollo 17 gnomon were given additional tempering and a thin film of oil was applied to protect against corrosion. | Apollo 16 | MSC-07230 |
| 47 | Bag dispenser assemblies repeatedly fell off brackets on 70-mm cameras. | Lunar surface experiment | Method of latching dispenser adapter to camera was inadequate. | Adapter redesigned. | Apollo 16 | MSC-07230 |
| 48 | Documented sample bag dispenser support bracket came apart. | Lunar surface experiment | Screws came loose. | Apollo 17 dispensers inspected to assure proper staking of screws. | Apollo 16 | MSC-07230 |
| 49 | Sample collection bag came loose from portable life support system tool carrier several times. | Lunar surface experiment | Method of attachment was inadequate. | Bag hooks redesigned. | Apollo 16 | MSC-07230 |
| 50 | Lunar surface far ultraviolet camera azimuth adjustment became difficult. | Lunar surface experiment | Grease in azimuth ring bearing became stiff. | No corrective action was taken since this experiment was not scheduled for another flight. | Apollo 16 | MSC-07230 |
| 51 | Velcro patch came off padded sample bags. | Lunar surface experiment | Improper bond material used for Velcro hook patch. | No corrective aciton taken since this equipment was not scheduled for another flight. | Apollo 16 | MSC-07230 |
| 52 | Loop came off lanyard for penetrometer stowage, release pin. | Lunar surface experiment | Lanyard loop was probably not properly crimped to cable. | Cable size changed from 3/64 inch to 1/16 inch and pull tested. | Apollo 16 | MSC-07230 |
| 53 | Active seismic experiment pitch sensor indicated off-scale high after launching third grenade. | ALSEP | Based on ground tests, mortar assembly is pitched up above normal 45° elevation or pitch sensor has failed. Most likely cause is failure in pitch sensor circuit. | No corrective action taken as the experiment was not scheduled for another mission. | Apollo 16 | MSC-07230 |
| 54 | Mapping camera extend retract times were abnormally long. | SIM | Unknown. (See Apollo 17 item 23.) | Openings in gear box sealed with pressure-sensitive tape. Excess lubricant removed from drive screw. Cover over rear transfer gears redesigned. | Apollo 15<br>Apollo 16<br>Apollo 17 | MSC-05161<br>MSC-07230<br>JSC-07954 |
| 55 | Mapping camera stellar glare shield failed to retract. | SIM | Undetermined. Possible cause was misalignment of drive rack and pinion gear when assembly was fully extended. | Drive rack aligned for proper pinion gear engagement. | Apollo 16<br>Apollo 17 | MSC-07230<br>JSC-07954 |
| 56 | Laser altimeter output degraded. | SIM | Most probable cause of Apollo 15 and Apollo 16 failures was contamination of optical surfaces within laser module by lubricant from Q-switch bearings. | Apollo 17 laser module modified to incorporate Q-switch bearings with oil-impregnated ball retainers. High purity quartz used in flashlamps. | Apollo 15<br>Apollo 16 | MSC-05161<br>MSC-07230 |
| 57 | Panoramic camera automatic exposure control indicated low light levels. | SIM | Problem could have resulted from contamination on light sensor optics, or a failure in the sensor or its associated circuitry. Problem existed preflight but was not detected. | No changes were made to hardware because there was no previous history of the types of failures that could have caused the problem. Sensor output voltage limits were added to preflight test procedure. | Apollo 16 | MSC-07230 |

APOLLO 16

| Anomaly No. | Anomaly Statement | Vehicle/ Equipment | Cause | Corrective Action | Missions | References |
|---|---|---|---|---|---|---|
| 58 | Laser altimeter photomultiplier tube voltage was erratic. | SIM | Some anomalous voltages probably cuased by sunlight reflections. An intermittent condition could have been caused by cyclic thermal environment of lunar orbit. | No corrective action taken because qualification test results and acceptance tests were considered adequate. | Apollo 16 | MSC-07230 |
| 59 | Nine frames of mapping camera metric photographs overexposed. | SIM | Noise voltage on power supplied to shift register or generated by some intermittent condition in camera must have switched one or more stages in register on or off. | No corrective action was taken because qualification test results and acceptance tests were considered adequate. | Apollo 16 | MSC-07230 |
| 60 | Mapping camera film was contaminated. | SIM | Most likely cause was residue from manufacturing or contaminants introduced from some outside source. | More thorough cleaning and inspection procedures implemented. | Apollo 16 | MSC-07230 |
| 61 | Electrical system meter anomalies:<br>a. Battery 2 voltmeter indicated off-scale low.<br>b. Battery 2 ampere-hour meter indicated off-scale low.<br>c. Battery 1 and 2 temperature meters indicated off-scale low. | LRV | Undetermined. Intermittent conditions must have existed in several multiple-wire splices. | No corrective action taken because cause of intermittent conditions could not be determined. | Apollo 16 | MSC-07230<br>MSC-07684 |
| 62 | Rear steering inoperative. | LRV | Open circuit may have occurred in hand controller potentiometer, or between potentiometer wiper and summing diode. | No corrective action taken. Problem could not be further isolated and existing design and testing were considered adequate. | Apollo 15<br>Apollo 16 | MSC-05161<br>MSC-07230<br>MSC-07683 |
| 63 | Navigation system computed parameters did not update. | LRV | Circuit breaker and switch configuration was probably incorrect. | No corrective action required. | Apollo 16 | MSC-07230 |
| 64 | Scale debonded from pitch attitude sensor. | LRV | The most probable cause was a flaw in the bonding. | No corrective action required. | Apollo 16 | MSC-07230 |

APOLLO 17

| Anomaly No. | Anomaly Statement | Vehicle/ Equipment | Cause | Corrective Action | Missions | References |
|---|---|---|---|---|---|---|
| 1 | Spurious master alarms occurred without accompanying caution and warning lights. | CSM-114 | Intermittent ground in panel 2. Circuitry is current limited so no hazard resulted. | None required. | Apollo 17 | JSC-07904 |
| 2 | Mission timer was 15 seconds slow at about 2 hours after lift-off. | CSM-114 | Not determined. | None - vehicle has redundant timers. | Apollo 17 | JSC-07904 |
| 3 | Retract limit switch on lunar sounder HF antenna boom 1 did not actuate. | CSM-114 | Abnormal friction on the limit switch cam follower arm, defective limit switch actuating mechanism spring, misalignment of the antenna tape element slot, or a malfunction in the limit switch assembly. | None - device not to be flown on future missions. | Apollo 17 | JSC-07904 |

APOLLO 17

| Anomaly No. | Anomaly Statement | Vehicle/ Equipment | Cause | Corrective Action | Missions | References |
|---|---|---|---|---|---|---|
| 4 | Lunar sounder high frequency antenna boom 2 deployment was slower than expected. | CSM-114 | Not determined. Increased and varying loads in a thermal/vacuum environment are a peculiarity experienced in mechanisms several times on Apollo. | None - device not to be flown on future missions. | Apollo 17 | JSC-07904<br>MSC-05161<br>MSC-07230 |
| 5 | Entry monitor system accelerometer null bias shifted. | CSM-114 | Contamination in accelerometer or open or short circuit in the accelerometer control circuits. | None required. | Apollo 17 | JSC-07904 |
| 6 | Chlorine ampule leaked. | CSM-114 | Bladder was not completely compressed in the ampule bore. When injector was then mated with the water port, back pressure ballooned and tore the bladder. | Skylab and Apollo-Soyuz crews trained to properly compress the bladder before mating injector to water port. | Apollo 16 | JSC-07904 |
| 7 | Mapping camera plume shield door failed to close. | CSM-114 | Not determined. Increased and varying loads in a thermal/vacuum environment are a peculiarity experienced in mechanisms several times on Apollo. | None - device not to be flown on future missions. | Apollo 17 | JSC-07904<br>JSC-05161<br>MSC-07230 |
| 8 | Hydrogen tanks 1 and 2 pressure operating deadband decreased in automatic heater mode. | CSM-114 | Probably contamination in the hydrogen tank pressure sensing switch stops reduced the switch's shaft travel that reduced the upper and lower deadband pressure spread. | None required. Problems of this nature can be handled by manual control of tank fans and heater cycles. | Apollo 17 | JSC-07904 |
| 9 | Erroneous measurements transmitted by telemetry. | CSM-114 | A failure occurred somewhere in the last four stages of programmer counter A. If the failure had not become intermittent, automatic counter switchover would not have occurred and the affected measurements would have been permanently lost. | A mating connector for the PCM package GSE connector will be carried in the Skylab and the ASTP spacecraft. The connector will have an internal jumper that grounds the proper pin so that the crew can switch to the desired programmer counter A or B. | Apollo 17 | JSC-07904<br>JSC-07985 |
| 10 | Water/glycol temperature control valve failed to maintain the evaporator temperature. | CSM-114 | Sticking occurs in valve gear train after driving hard against full closed stop position. Pitch circles of two gear pairs in the valve gear train are sometimes not tangent. Causes contacting teeth to slide rather than roll. Also some gear trains have dry lubricant scraped off the gear teeth in the area of contact, causing high sliding friction. | None - manual valve operation is satisfactory as shown during Apollo 16. | Apollo 17 | JSC-07904<br>MSC-07230 |
| 11 | Battery 4 voltage reading was lower than that of battery 3. | LM-12 | Battery 4 voltage reading was not a true reading. The voltage measurement signal conditioner has an input resistive divider network. A resistive increase of 1 percent in this network would account for the lower voltage of battery 4. Another possibility of this type exists in the zero-adjust network. | None - this circuitry will not be flown on any planned future mission. | Apollo 17 | JSC-07904 |

APOLLO 17

| Anomaly No. | Anomaly Statement | Vehicle/ Equipment | Cause | Corrective Action | Missions | References |
|---|---|---|---|---|---|---|
| 12 | Oxygen demand regulator leaked. | LM-12 | Could have been caused by contamination of regulator A; a 2.5-micron particle between the regulator (ball) poppet and the seat. Also possible, but not likely, the crew could have inadvertently bumped the regulator handle. | None - this equipment is not to be used on future spacecraft. | Apollo 17 | JSC-07904 |
| 13 | No extravehicular activity warning tone in Command Module Pilot's communications carrier. | GFE | Warning tone loss and left earphone loss were caused by two wire leads broken 1/4-inch below their exit point from the potting of the flex relief attached to the lower end of the communications carrier splice block. | Crew training and procedures revised to reflect a harness configuration that prevents twisting of the wire harness. | Apollo 17 | JSC-07904 |
| 14 | Lunar surface gravimeter beam cannot be stabilized in the null position. | ALSEP | Mathematical design error resulted in the sensor mass weight being about 2 percent lighter than the proper nominal weight for 1/6g operation. | The beam has been balanced and centered by partial caging of the mass weight assembly. Further analysis of data channels is in progress to determine if free mode oscillations and gravity waves are being detected with this configuration. | Apollo 17 | JSC-07904 |
| 15 | Surface electrical properties receiver temperature higher than predicted. | Lunar surface experiment | A dust film covering 10 percent of the optical solar reflector (mirror) on top of the receiver could result in the indicated degradation of thermal control. Also, the thermal Kapton bag top cover flaps could not be tightly closed to keep out dust and sunlight. | None - this experiment is not scheduled for a future mission, however, similar bonding configurations will require stringent quality control. | Apollo 17 | JSC-07904 |
| 16 | Lunar ejecta and meteorite experiment temperature high. | ALSEP | Error in calculating thermal control configuration capability for Apollo 17 site. | Instrument is operating properly but is commanded off each lunar day until its temperature cools down again. Temperature of operation is being increased in controlled increments each lunar day until allowable maximum is reached. | Apollo 17 | JSC-07904 |
| 17 | Cask dome removal was difficult. | ALSEP | Removal tool pins were not locked into the recess in the dome. | The dome was easily wedged off the cask with the hammer. No further investigation was performed since the cask is not scheduled to be flown on future missions. | Apollo 17 | JSC-07904 |
| 18 | Background noise in the lunar atmospheric composition experiment data. | ALSEP | Cause is not known. | The condition is stable and has caused no loss of data. No further ground tests are planned since this experiment will not be flown on future missions. | Apollo 17 | JSC-07904 |

APOLLO 17

| Anomaly No. | Anomaly Statement | Vehicle/ Equipment | Cause | Corrective Action | Missions | References |
|---|---|---|---|---|---|---|
| 19 | Panoramic camera velocity/altitude sensor operated erratically. | SIM | Analysis indicates that the erratic operation may have resulted from a downward shift in the scaling of the sensor output signal. This would most likely be caused by a failure within the sensor head circuitry. | The override capability was used for the remainder of the mission. This locks out the sensor and substitutes preset voltages which corresponds to orbital travel rates for 55 and 60 mile altitudes. This was the last mission for the panoramic camera and no further investigation is necessary. | Apollo 17 | JSC-07904 |
| 20 | Mapping camera exposure pulse absent at low light levels. | SIM | The light sensor circuitry experienced a threshold shift. This shift could have been the result of a photodiode failure or a change in the performance of the amplifier, the one-shot multivibrator or the circuitry between these two elements. | The film was properly exposed showing that nothing was reducing the light being transmitted to the film. The only loss was the telemetry indication that confirms that the light had been transmitted. Since this was the last mission for this camera, no further analysis is necessary. | Apollo 17 | JSC-07904<br>MSC-05161<br>MSC-07230 |
| 21 | Panoramic camera gimbal drive failed during final pass. | SIM | Most likely, the gimbal drive motor failed since the motor brushes are limited life items. Another possibility is failure of the electrical circuitry that provides power to the motor. | No corrective action was taken since this was the last mission for this camera. | Apollo 17 | JSC-07904 |
| 22 | Ultraviolet spectrometer temperature measurement failures. | SIM | Probably a component failure or a short in the circuit wiring in the reference voltage or the minus 15 volt supply. | These were housekeeping measurements and were independent of scientific data circuitry. Since this was the only mission for this instrument, no corrective action was taken. | Apollo 17 | JSC-07904 |
| 23 | Mapping camera deploy/retract times were excessive. | SIM | The behavior was quite similar to that during the Apollo 15 and 16 missions. Other anomalies in the scientific instrument module bay suggest a common unknown factor. In all cases, some degree of sliding between metal surfaces was required. The friction between those surfaces may have been significantly increased by the effects of a hard vacuum in space that is unobtainable in ground testing. | Since this was the last mission for this instrument, no corrective action was taken. However the general problem is being studied for future missions at Lewis Research Center. | Apollo 17 | MSC-05161<br>MSC-07230<br>JSC-07904<br>JSC-07954 |