Journal of The British Interplanetary Society, Vol. 48, pp. 199-212, 1995.

LUNAR ROVING VEHICLE: HISTORICAL ORIGINS, DEVELOPMENT AND DEPLOYMENT

BETTYE B. BURKHALTER and MITCHELL R. SHARPE*
Economic Development Institute, Auburn University, Auburn, Alabama USA
**US Space and Rocket Center, Huntsville, Alabama USA*

The technological history of the Lunar Rover Vehicle from concept to use on the Moon is recounted. Several concepts from science fiction are described as a prologue to the story of the design, development and testing of the vehicle deployed on the Moon by the astronauts of Project Apollo. Also briefly described are lunar surface vehicles proposed by Hermann Oberth, Arthur Clarke, and Georg von Tiesenhausen.

Engineering problems that arose during the program are presented as well as their solutions. Special attention is given to the innovative navigation and mobility subsystems of the Lunar Rover.

The performance of the vehicle during the Apollo 15, 16, and 17 missions to the Moon is tabulated. In conclusion, the point is stressed that this complex engineering task took only 17 months from drawing board to finished vehicle.

1. LUNAR ROVING VEHICLES (LRV) IN SCIENCE FICTION

The idea for a vehicle that would transport man on the surface of the Moon, like other technological realities in contemporary astronautics, had its conceptual beginnings in the imagination of the writers of science fiction in the early years of the 20th Century. It is interesting to note that this era was also a seminal period in the development of the automobile and tractor for personal transportation and prime movers. One could theorize about this relationship from a point of view of influence on the fictional rovers, e.g., the use of wheels for traction. One could, as well, point out that fictional rovers foresaw the need for closed environmental systems not found in the early terrestrial vehicles.

One of the first fictional rovers is found in the novel, *A Srebyym Globie* (On the Silver Globe), published in 1901 by the Polish writer, Jerszy Zulawski. It had a pressurized cabin and electric power. Its mobility subsystem was certainly one of its most imaginative features. The vehicle had wheels that could be removed and replaced with legs or "claws" for use on hills or rough surfaces (fig. 1). Additionally, the rover could be used as a boat! Zulawski' svehicle had a top speed of 10 km/hr, about the same as the Apollo rover. The writer also included in his novel a projected lunar traverse for his astronauts. Just before launch, from a Jules Verne-like cannon, one of the crewmen had second thoughts about the success of the mission and withdrew from it. His name was Braun - without the von [1].

The American science fiction publisher and writer, Hugo Gernsback, described a lunar rover in his story, *Baron Munchausen's New Scientific Adventures*, in 1915. It bore little resemblance to either Zulawski's rover or that of the Apollo astronauts. It was a steel sphere some 18 m in diameter and covered with "Marconium." Traction was provided by a circumferential track (fig. 2). Gernsback's vehicle was also a

Fig. 1 Lunar Rover Proposed by Science Fiction Writer Jerszy Zulawski in 1901.

Fig. 2 Spherical Lunar Rover Conceived by Hugo Gernsback in 1915.

spaceship that could be launched directly to the Moon [2].

The Russian space pioneer, Konstantin Tsiolkovski, described a lunar rover in one of his early novels. Published in 1918, *Vne Zemli* (Outside the Earth) included a rover that was also a lunar lander. Its crew of two were protected from the lunar environment inside a pressurized cabin. Tsiolkovski's vehicle had electrically powered wheels and a unique temperature control system. It consisted of a section of the cabin that was covered with "sooty black and silver bars" over which there was a movable shield operated by the crew (fig. 3). The technique is similar to that used on the Explorer 1 and other early Earth satellites. His rover also had small rockets (i.e., Jatos) to boost it across crevasses and a large rocket for return to Earth [3].

During the 1920s and 1930s, the lunar rovers of science fiction were sometimes more humorous than scientific. Homer Eon Flint, in 1923, proposed in his novel, *Out of the Moon*, what might be termed an ornithomorphic design (fig. 4). It resembled a large, two-legged, bird-like rover that walked across the Moon [4].

In 1961, the indefatigable Gernsback came out with another rover design. He called it the "Homobile," (fig. 5). It had a pressurized cabin mounted on tracks and powered by electricity from fuel cells, with a leg-powered generator as an alternate source of energy [5].

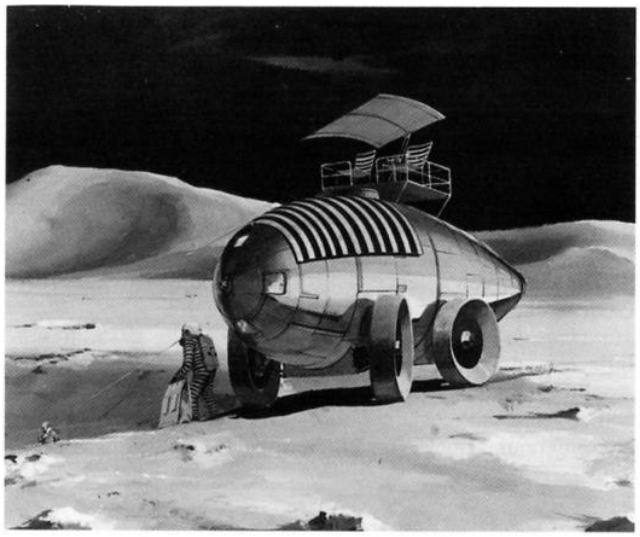

Fig. 3 Russian Space Pioneer Tsiolkovski Foresaw the need for this Type Lunar Rover in 1918.

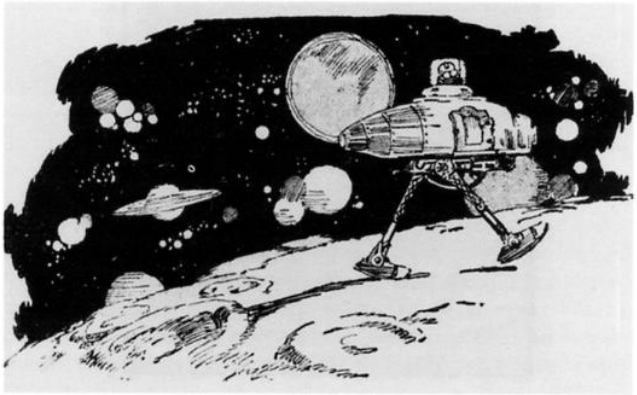

Fig. 4 Homer Eon Flint Suggested a Walking Lunar Rover in 1923.

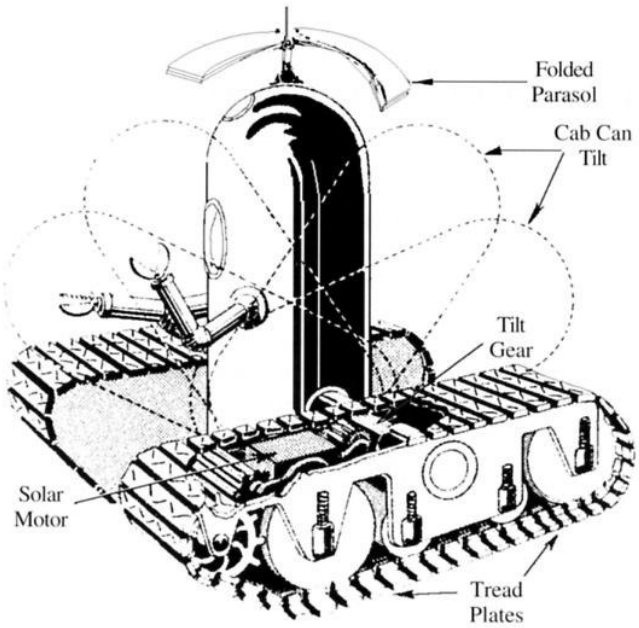

For easier maneuvering the cab can be tilted both ways. Note folding metal parasol and solar motor.

Fig. 5 In 1961, Science Fiction Writer Gernsback Designed his Homobile for Use on the Moon.

2. STEPS FROM SCIENCE FICTION TOWARDS TECHNOLOGICAL REALITY

As the technology of astronautics moved from fiction to fact in the early 1950s, more serious and professional attention was turned toward lunar rovers by individuals who would, in one way or another, become involved in the landing of men on the Moon. These were scientists and engineers rather than writers, although some were both. Arthur Clarke, a British mathematician and physicist who was involved in radar research during World War II, published his book, *The Exploration of Space*, in 1951. In it, he wrote of lunar surface transportation: "Pressurized vehicles with large balloon tyres would also be employed for much of the same duties that they fulfil on Earth. Their motors would be electric, operated by storage batteries, or else turbines, driven by reacting rocket fuels, either directly as in a gas turbine, or indirectly through the use of some intermediate fluid" [6].

In 1953, Wernher von Braun suggested a tracked lunar rover driven by hydrogen peroxide exhausted through steam turbines. This power source obviously was influenced by his experience with such turbines during the development of the V-2 missile during World War II [7].

A very fanciful lunar rover was proposed by the German space pioneer, Hermann Oberth, in his Man into Space, printed in 1954 [8] and later elaborated in *Das Mond Auto* (1959). It consisted of a manned spherical compartment 5 m in diameter attached to a telescoping monopod that could extend to a height of 6.7 m. The gyroscopically stabilized vehicle would have a maximum height of 18.5 m and would be mounted on tracks. A mirror on top of the cabin would permit the use of solar energy (fig. 6). An alternate power supply would be a 7 amp engine operating on hydrogen peroxide to power the rover. The vehicle would weigh 1654 kg on the Moon and travel at speeds up to 150 km/hr! Purely a theorist, he wasted no time on engineering details; he left it for others to determine how to build and launch the behemoth to the Moon [9].

In 1959, the U.S. Army Ordnance Missile Command, in

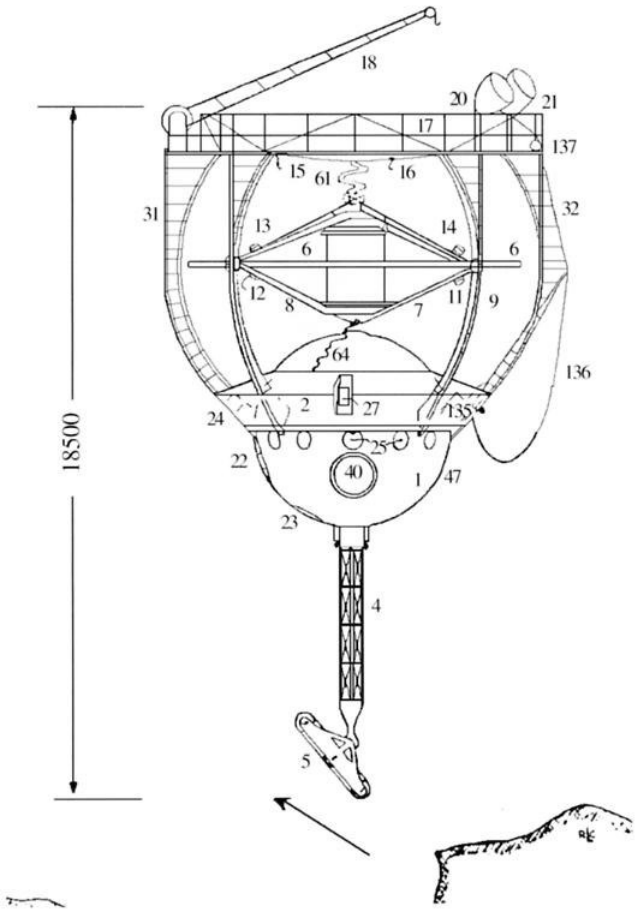

Fig. 6 German Space Pioneer Hermann Oberth described an Imaginative Lunar Rover in his 1954 Book *Man into Space*.

Huntsville, Alabama, completed a study for a manned base on the Moon. Given the code name "Project Horizon," the task of developing a manned lunar rover was assigned to the Transportation Corps. It was to have a pressurized cabin and accommodations for a crew of two. The Horizon rover would weigh some 900 kg and be powered by rechargeable electric batteries. While the vehicle would have wheels, all-metal designs similar to the tractors of the early 20th Century, it also would have "auxiliary track kits . . . provided to cope with possible deep loose dust areas." The vehicle would have a range of at least 80 km and perhaps as much as 240 km [10].

Some of the individuals who participated in Project Horizon were transferred from the U.S. Army Ballistic Missile Agency to the newly established Marshall Space Flight Center (MSFC), in Huntsville, when it was formed in 1960. Among these was Georg von Tiesenhausen. Continuing his studies on lunar rovers, he proposed the following features for such vehicles:

(1) Noninflated, flexible wheels are recommended for lunar applications.

(2) For the first launch vehicle, a four-wheel, individually powered drive system is recommended. In view of the final design of the LRV, these specifications are particularly significant [11].

During the early 1960s, NASA called upon the aerospace industry to undertake studies and limited technology programs to meet the mobility needs foreseen for the post-Apollo lunar exploration. Included in these studies and programs were the Lunar Logistics System (LLS), the Mobile Laboratory (MOLAB), Lunar Scientific Survey Module (LSSM), and the Mobility Test Article (MTA). These proposals were based upon a dual-launch Apollo lunar module; i.e., after the astronauts had landed on the Moon, their lunar module would arrive *via* an unmanned vehicle.

On September 5, 1962, The National Aeronautics and Space Administration's (NASA) Office of Manned Space Flight began studies for the definition and design of a Lunar Logistic System, with the assistance of Grumman Aircraft Engineering Corp. and the Northrop Space Laboratories, Inc. Among the payloads considered were a large and small lunar rovers, the former weighing 3,000 kg and the latter weighing 1,500 kg. The large vehicle envisioned a crew of two within a pressurized cabin that could sustain the men for 30 days. With a speed of 14 km/hr, it was to have had a total range of 450 km. Its four nonrigid, metal wheels were each to be powered by its own electric motor from power generated in a liquid oxygen-liquid hydrogen fuel cell. The vehicle was to be 5.4 m long and 2 m in width [12].

The smaller rover was to be only 3.6 m long and 2.5 m wide. Its pressurized cabin could sustain two men for seven days. The vehicle was to have a range of 368 km at an average speed of 9 km/hr. The wheel and drive system was to be the same as that of the large rover [13].

The chief value of these studies, as well as company-funded research by firms such as Grumman Aircraft Engineering Corp. and Northrop Space Laboratories, Inc. lay in their compilation of the best available information on which to base parametric designs for lunar rovers.

Similar data were obtained from two studies called Apollo Logistics Support System sponsored by the Marshall Center in June 1964. They were made, under contract, by the Boeing Co. and the Bendix Corp [14].

Both companies were given identical mission requirements and asked to submit preliminary designs for a lunar rover capable of sustaining two men for 14 days. Known as MOLAB (Mobile Laboratory), a vehicle of this type was foreseen as a logical need in the years following the initial landing of men on the Moon. Both studies were complete after six months.

The rover proposed by Bendix was 9 m long and had a pressurized cabin 3.6 m long and 2 m in diameter. With four elastic metal wheels, the vehicle weighed 3060 kg. The vehicle had a range of 90 km and could carry 337.5 km of scientific instruments. The Boeing model was 11.5 m long. It was a two-part articulated vehicle with the four-wheeled front joined by an elastic frame to a two-wheeled rear. Its six wheels were of woven wire design and 1.5 m in diameter. With a range of some 150 m, the 3620 kg rover could carry about 300 kg of scientific instruments [15].

Of special interest in the evolving technology leading to the lunar rover that first maneuvered on the Moon was the concept of individual electric motors in the six wheels of the Boeing concept. They were to have been powered by liquid oxygen-liquid hydrogen fuel cells.

The MOLAB contracts were extended upon completion and redirected to study a smaller rover called Local Scientific Survey Module, which would be a one-manned vehicle in which the astronaut wore a spacesuit rather than working in a pressurized cabin. The two contractors were also directed to provide a stripped-down version of their proposed MOLABs at one-sixth of their design weight. These vehicles were called Mobility Test Articles (MTA), and, as the name implies, were used to gain data on the driving characteristics of such vehicles. Both articles were test-driven at the Aberdeen Proving Ground, MSFC, and in the desert at Yuma, Arizona Proving Ground, in

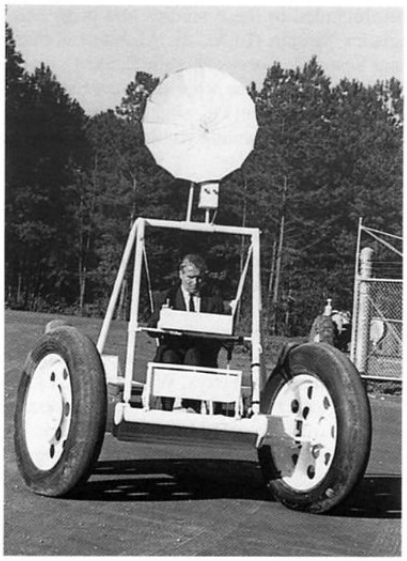

Fig. 7 Wernher von Braun Test Drives a Mobility Test Article at MSFC.

February 1967 (fig. 7). The Bendix MTA weighed approximately 765 kg and was 7.2 m long, 3.75 m wide, and 3.3 m high. Its four elastic metal wheels were 2 m in diameter and each wheel had its own direct-current drive motor located in the hub. The Boeing model weighed 823.5 kg and was 6 m long, 3 m wide, and 3.3 m high. Its six woven wire wheels were each 1.5 m in diameter, and each wheel had its own alternating-current drive motor sealed in the hub.

The MOLAB proposed by Bendix Corp. (fig. 8) bore an external resemblance to an Earth-bound rover designed and built in 1939 by the Research Foundation of the Armour Institute of Technology (fig. 9). The $150,000 vehicle was 16.76 m long, 4.75 m wide, 34,020 kg in weight and was officially known as Project I-69 but more familiarly called the Snow Cruiser. It was built for the third Antarctic expedition of American Admiral Richard Byrd in the same year. The Snow Cruiser carried a five-passenger airplane with skis on its back "for aerial explorations of a region 600 miles wide over a given route." Its four 3.04- m pneumatic rubber tires were driven by 75-hp, battery-

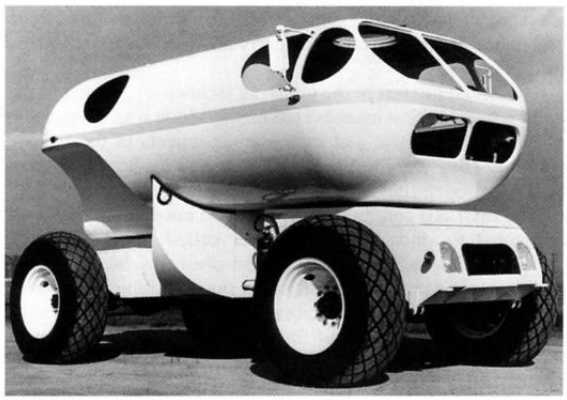

Fig. 8 MOLAB Lunar Rover Concept Developed by Bendix Corp.

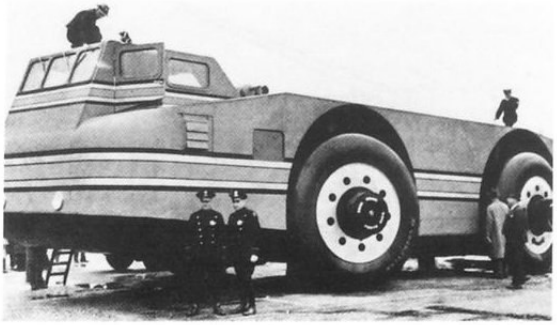

Fig. 9 Snow Cruiser Built for Exploration of Antarctica in 1939.

powered, electric motors. Other features included: "Two [200-hp] Diesel-electric power plants will generate the electricity needed. The snow cruiser which combines a well-equipped laboratory with quarters for the crew for a period of one year without contact with the outside world, will have a cruising range of 5,000 miles, a speed from 10 to 30 mph depending on grade, surface conditions, and weather, is 15 feet high, and will be able to span crevasses 15 feet wide" [16].

The General Motors Defense Research Laboratories, Santa Barbara, California, investigated the possibility of sending a lunar rover along with the astronauts. Thus, the need for a separate launch would be obviated. The results of this study were released in June 1968 and concluded that a surface vehicle capable of carrying two astronauts and their science equipment on three or four round trips of 20 km each could be packaged into one unused corner [quadrant] of the Apollo Lunar Module descent stage within the weight constraints established. The vehicle could also be used for unmanned exploration by remote control from Earth after the astronauts left (dual mode operation) [17].

3. CONCEPT, DESIGN AND DEVELOPMENT

When the time arrived to begin design of the rover, the concept of a large vehicle was abandoned largely because of monetary considerations. Instead of MOLAB, the Apollo astronauts would be furnished with a small, four-wheeled vehicle that had the external appearance of the well-known American jeep of World War II, or dune buggy. There was no pressurized cabin. Thus, much of the design information available in the literature that had accrued over the preceding five years or so went for naught.

The greatest problem facing the designers was a lack of knowledge of the surface of the Moon. The mobility subsystem of the vehicle had to be designed on the best estimate of the lunar surface. During the 1960s, and earlier, there were two opposing views of the nature of the soil in the marias. Some astronomers felt that the Moon in many areas was covered with very deep dust. Others believed that the dust layer was only a matter of a few centimeters. To a great degree, the pictures and data returned to Earth by the Luna and Surveyor Probes which landed on the Moon between 1966 and 1969 helped settle that controversy. Also, the footprints of the first men on the Moon in 1969, left no doubt that vehicles landing in the maria would not sink to great depths.

Another problem arose, although not a technical one. A letter from the Rover Co. Ltd., Sollihull, England, to the Boeing Co. brought up the point that the words Rover and Land-Rover were copyrighted by the former firm. While admitting that "we have no foreseeable intention ourselves of producing a vehicle for

Fig. 10 Dr. M.G. Bekker, Defense Research Laboratories of General Motor Corp., considered several means of traction for Lunar Rovers.

use in any space programme, and therefore we are not really in competition with you, nevertheless we feel that there is some risk of confusion . . .." Further on in the letter, the Rover Co. stated: " . . . and I cannot see that we could possibly object to such words as Lunarover . . ." [18].

At this point in the history of the lunar rover, a pioneer in the science of soil trafficability and traction on Earth and Moon must be introduced. He was Dr. M.G. Bekker, whose books, *Theory of Land Locomotion: The Mechanics of Vehicle Mobility* (1956) and *Off-the-Road Locomotion: Research and Development of Terramechanics* (1960), are standard texts in the field. Additionally he wrote three extremely important papers that materially contributed to the design of the first lunar rover, a project in which he was later deeply involved [19].

The development of the lunar roving vehicle was in some ways the rediscovery of the wheel. Between 1961 and 1970, Bekker, in experiments at the Defense Research Laboratories of the General Motors Corp., had experimented with small-scale lunar rover models that were wheeled, tracked, screw-propelled, and legged (fig. 10) [20].

Once the decision was made by NASA on May 23, 1969, to develop a lunar rover for use in the last four missions of the Apollo program, the choice for a field center to manage the project was not difficult. The agency's Marshall Center had been studying such vehicles since 1964. Some of its personnel had been so involved as early as 1959.

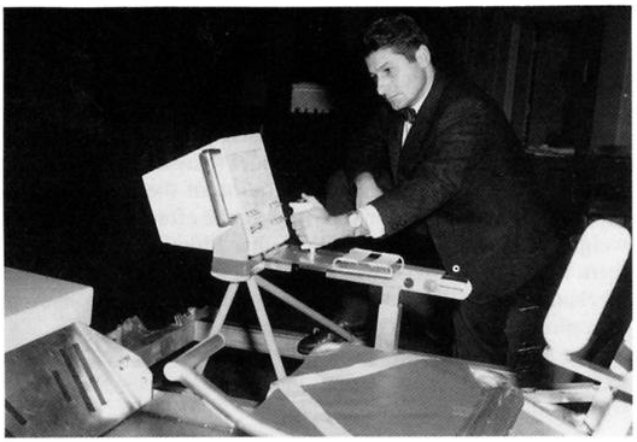

Fig. 11 Saviero F. Morea Named LRV Manager at MSFC in 1961.

To accomplish this assignment, the Center established the Lunar Roving Vehicle Project Office in June 1969, with Saverio F. Morea, a rocket engine specialist, as its manager (fig. 11). Within a matter of weeks, on July 11, Morea's office issued a request for proposal to 29 companies for the development of NASAs lunar roving vehicle [21]. A detailed scope of work was made available to them that listed the specified design and performance constraints for the vehicle as well as managerial requirements.

The scope of work also set forth a very tight schedule for completion of the projec. Delivery of the first rover destined to land on the Moon was to be made in April, 1971, following the award of the contract in October 1969 [22]. This time frame can be compared with that needed to develop the Lunar Orbiter probe in 1963: 26 months - then considered a near miracle. Other essential dates in the developmental and qualification schedule included a preliminary design review within 10 weeks and a critical design review within 22 weeks, at which point the final design would be approved for manufacture [23].

The same document also specified design features, many of which were decided upon from research and studies mentioned earlier:

(1) *Configuration* - The LRV will be a four-wheel vehicle powered by storage batteries with each wheel powered by an electric motor. The LRV will be operated manually by one astronaut.

(2) *Weight* - 400 lbm maximum which includes the tie-down and unloading systems.

(3) *Cargo Carrying Capacity* - 100 lbm of science experiments plus two astronauts at 370 lbm each for 840 lbm total or alternate of one astronaut plus 470 lbm, and also to provide the capability of carrying 70 lbm of lunar soil and rock samples.

(4) *Range* - The LRV will be capable of performing four 30 km traverses in a 78 hour period for a total of 120 km.

(5) *Life* - The LRV will be capable of an operation life on the lunar surface of a minimum of 78 hours during the lunar day.

(6) *Stowage* - The LRV will be capable of being stowed in one

bay of the Extended LM. The CG and the envelope of the LRV must be consistent with the constraints outlined in the LM interface exhibit of this statement of work [Ref. Exhibit 6].

(7) *Speed*- The fully loaded LRV will be capable of a sustained velocity of 16 km/hour, on a smooth mare surface [as defined in Exhibit 1]. The LRV speed shall be continuously variable from 0-16 km/hr.

(8) *Deployment* - The LRV will be capable of being deployed with minimum activity by one astronaut.

(9) *Sterilization* - Not required, but the contractor shall indicate his approach to reduce the level of biological contamination to be consistent with present LM requirements.

(10) *Obstacle Negotiation* - Step obstacle 30 cm high with both the wheels in contact at zero velocity, crevasse capability of 70 cm wide for both wheels at zero velocity.

(11) *Slope Negotiation* - The fully loaded LRV will be capable of climbing and descending slopes of up to 25°.

(12) *Single-Point Failures* - The LRV system and subsystem design will be such that no single-point failure shall abort the mission and no second failure shall endanger the crew.

(13) *Operation* - The LRV will be capable of being checked out and operated by one astronaut on the lunar surface with the controls and displays located on the vehicle.

(14) *Crew Safety* - The LRV design and the LRV operational procedures shall include the required provisions to insure crew safety from all identified hazards. (Examples of hazards are solar glare from reflecting LRV surfaces, lunar surface roughness, vehicle instability, etc.)

(15) *Reverse* - The LRV will be capable of backing up with provisions for the driver to have visibility when operating in this mode.

(16) *Dust* - Critically affected surfaces or components shall be designed to minimize degradation by dust and should be located such that dust coverage is difficult.

(17) *Clearance* - The LRV will be capable of a minimum ground clearance of 35 cm on a flat surface.

(18) *Lateral and Longitudinal Static Stability* - Minimum pitch and roll angles of 45° with full load.

(19) *Turn Radius* - Approximately one vehicle length.

(20) *Emergency Aids* - Emergency aids will be considered to help free the vehicle (e.g., hand holds).

(21) The power system shall provide a contingency 150 watts over and above the LRV requirements while driving.

(22) The contractor shall specify the LRV acceleration capability in the proposal [24].

Additional design requirements dealt with such systems as mobility and chassis, electric power supply, controls and displays, scientific equipment, stowage, thermal control, caution and warning, crew station, and tie-down and deployment [25].

It is interesting to note that the use of four wheels was specified rather than tracks or other means of traction. One of the most challenging design problems was the requirement for the vehicle to be folded up and stowed in the Quadrant 1 compartment of the ascent stage of the Apollo Lunar Module (fig. 12). To visualize the problem better, the folded rover would

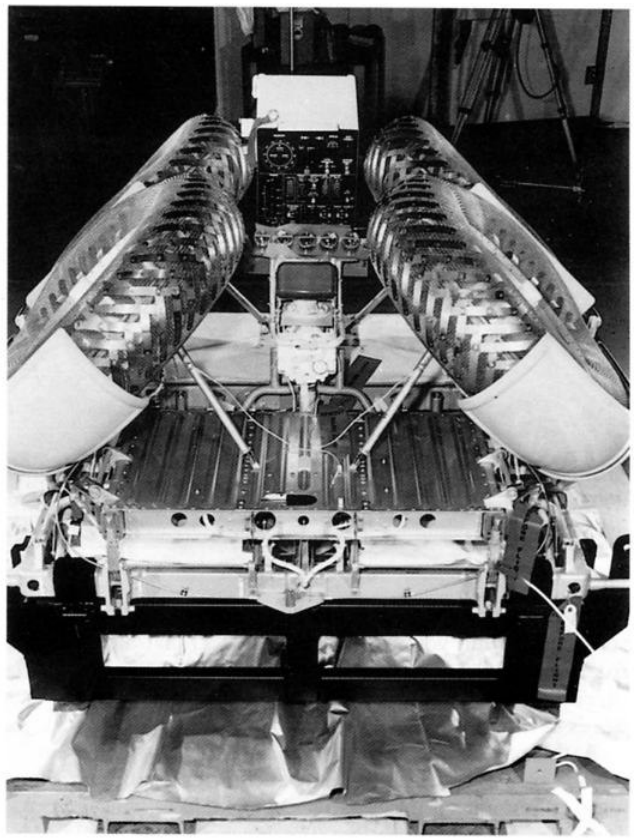

Fig. 12 The LRV Shown in Folded Configuration and Ready for Stowage in the Apollo Lunar Lander.

have a volume approximately that of the familiar Volkswagen "Beetle," but it would have to unfold into a vehicle with little less than the volume of a Mercedes Benz 190.

Between July 11 and October 28, Morea's office and team of engineers at MSFC evaluated proposals from four companies that responded. These were Grumman Aerospace, Chrysler Space Div., Bendix Corp. and the Boeing Co. By September 30, the choice had been narrowed to Bendix and Boeing, and contract negotiations were opened with both. On October 28, NASA announced that the Boeing Co. had been selected for the task. The estimated cost of the total project was $19,000,000. A cost-plus-incentive-fee contract was signed with the company in October [26].

The Boeing Co. was to furnish eight vehicles, of which four would be for use on the Moon. (The fourth vehicle was later delivered as spare parts rather than as an assembled rover because of deletions in the number of lunar landings.) Other vehicles included a static model, used primarily for human factors purposes; an engineering model to assist in developing and verifying the design and integration of the rover's major subsystems; and a unit for determining the effect of the rover's weight on stresses in the Apollo Lunar Module. Additionally, there were two "1/6-gravity" models for testing the deployment mechanism and a "1-gravity trainer" for instructing astronauts in operation of the rover. There was also a vibration test vehicle to ensure the structural integrity of the rover and a qualification test unit to be used in a final check of all subsystems in a simulated lunar environment [27].

The first major event in the fast-paced program occurred on January 18-19, 1970, at the Marshall Center. Some 120 members of the Boeing Co., Marshall Center management and

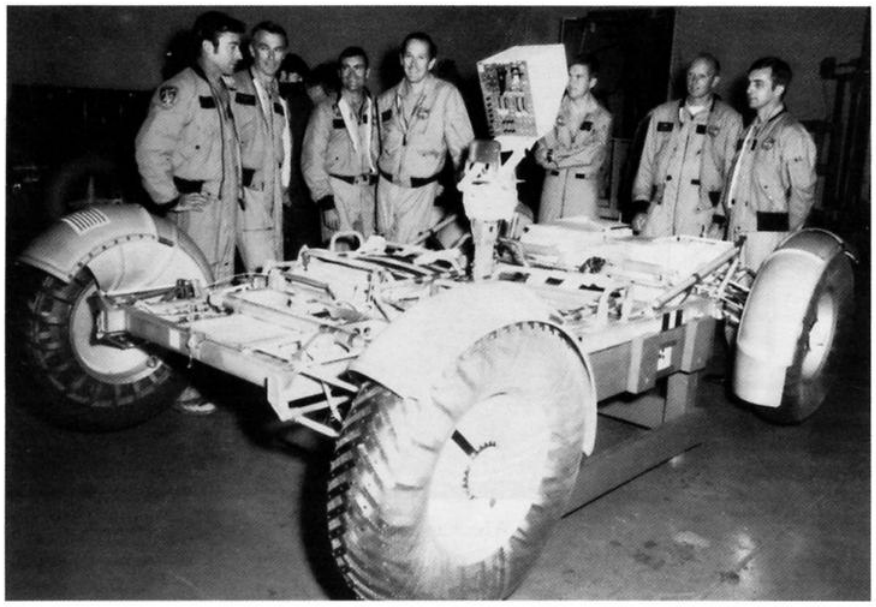

Fig. 13 NASA Astronauts had a Vested Interest in the Development of the LRV. Shown here, Left to Right, Astronauts Young, Cernan, Haise, Duke, England, Fullerton, and Peterson.

engineering staff, and other NASA personnel held a preliminary design review on the lunar roving vehicle. Also included were astronauts John Young, Gerald Carr and Charles Duke [28]. The suggestions made by the astronauts then and as the project developed proved helpful in various areas (fig. 13).

The purpose of the review was to ensure that the preliminary design of the rover was workable and would lead to the accomplishment of the vehicle's specified performance.

The final certified design review was held at MSFC on June 16-17 [29]. At that point the design was considered complete and production of the vehicles could proceed. Because of the limited time available for the project, three phases began concurrently: development testing, design, and qualification testing. Development testing proved out design concepts, provided alternative designs and established manufacturing procedures. Qualification testing was done on components in a simulated lunar environment to assure their integrity and ability to perform as required. It continued into the manufacturing phase and, in only nine months, 32 major tests were made and 6000 pages of test reporting published. The last phase, acceptance testing, was done on both components and the assembled rover. The entire vehicle was placed in a huge vacuum chamber for 78 hours and cycled through greater temperatures than it would encounter on the Moon [30]. The developmental and qualification testing of components was done in a variety of facilities. The mobility subsystem, or at least the wheel of it, was tested on a special device that simulated the one-sixth gravity of the Moon in the U.S. Army Engineer Waterways Experiment Station, in Vicksburg, Mississippi. Six versions of the Boeing-GM wire-mesh wheel were laboratory tested in a lunar soil simulant, consisting of a crushed basalt with a grain-size distribution similar to that of samples collected during Apollo 11 and 12 flights, to determine their relative performance. The consistency of the soil was varied to cover a range of cohesive and frictional properties to simulate soil conditions assumed to exist on the Moon.

Programmed-slip and constant-slip tests were conducted with the U.S. Army Engineer Waterways Experiment Station single-wheel dynamometer system. The performance of the wheel covered with a metal chevron tread over 50 percent of its contact surface was slightly superior to that of other tread designs [31].

The wheel was also tested under one-sixth gravity conditions aboard a KC-135 aircraft flying a ballistic path that produced such a load upon it. Other tests were performed at Boeing's plant in Kent, Washington, and at the Marshall and Johnson Space Centers.

The final design of the lunar rover was purely functional. It consisted of eight subsystems that made it an extremely difficult vehicle to develop, despite its simple appearance. These subsystems were mobility, power, navigation, communication, thermal protection, crew station, control and display, and vehicle deployment.

Most problems encountered during the development and testing of the vehicle were within the mobility, navigation and deployment subsystems [32].

The mobility subsystem consisted of the chassis and equipment and controls necessary to propel, suspend, brake and steer the rover. The basic chassis was made of aluminum alloy 2219 tubing similar to the metal used for aircraft wing tips. The four wheels were mounted on the chassis by a pair of suspension arms attached to torsion bars and a damper to act as a shock-absorber. Fully loaded, on the Moon, the system permitted a chassis ground clearance of 35 cm. Each wheel had its own electric-powered traction drive [33].

The wheel itself was of a novel design, developed largely by Dr. Bekker and his coworkers at General Motors, which had the major subcontract by Boeing. Formed of wire mesh, the wheel was 81.8 cm in diameter and weighed only 5.4 kg. The mesh consisted of hand-woven strands of high-strength steel. Each strand was 81.3 cm long and only 0.083 cm in diameter. Each of the 800 strands was subjected to x-ray inspection prior to use. Attached to a rim and disk of formed aluminum, the mesh acted as a flexible tire for the wheel. A number of titanium chevrons were attached to the surface of the mesh and covered 50 percent of its surface contact area. Within the mesh, an "inner tube" made of titanium absorbed high-impact loads [34]. As novel as the wheel may appear, its principle was patented in 1858 in England by a mechanic at the Castle Foundry, Buckingham (fig. 14) [35]. Thus, General Motors had, in a way, reinvented the wheel. The fundamentals of the proposed mobility system had early been featured in a report written by Dr. Bekker and F. Pavlics in May 1963 [36]. The reason for such a wheel rather than a pneumatic tire was one primarily of weight and reliability.

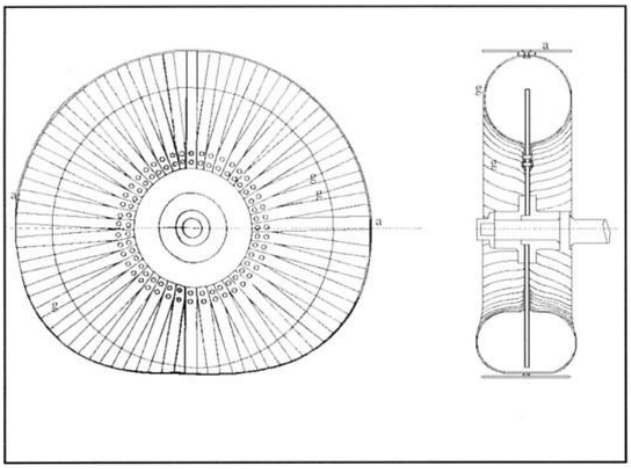

Fig. 14 Metallic Wheel Developed by Thomas Rickett, a Mechanic in England and Patented in 1858.

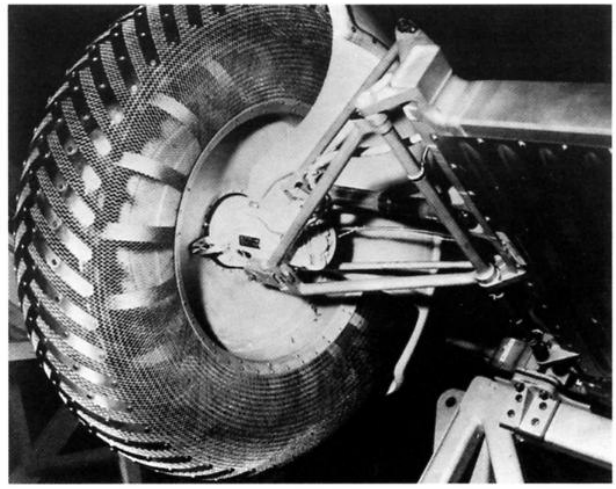

Fig. 16 LRV Wheel and Sealed Traction Drive Motor with Harmonic Drive.

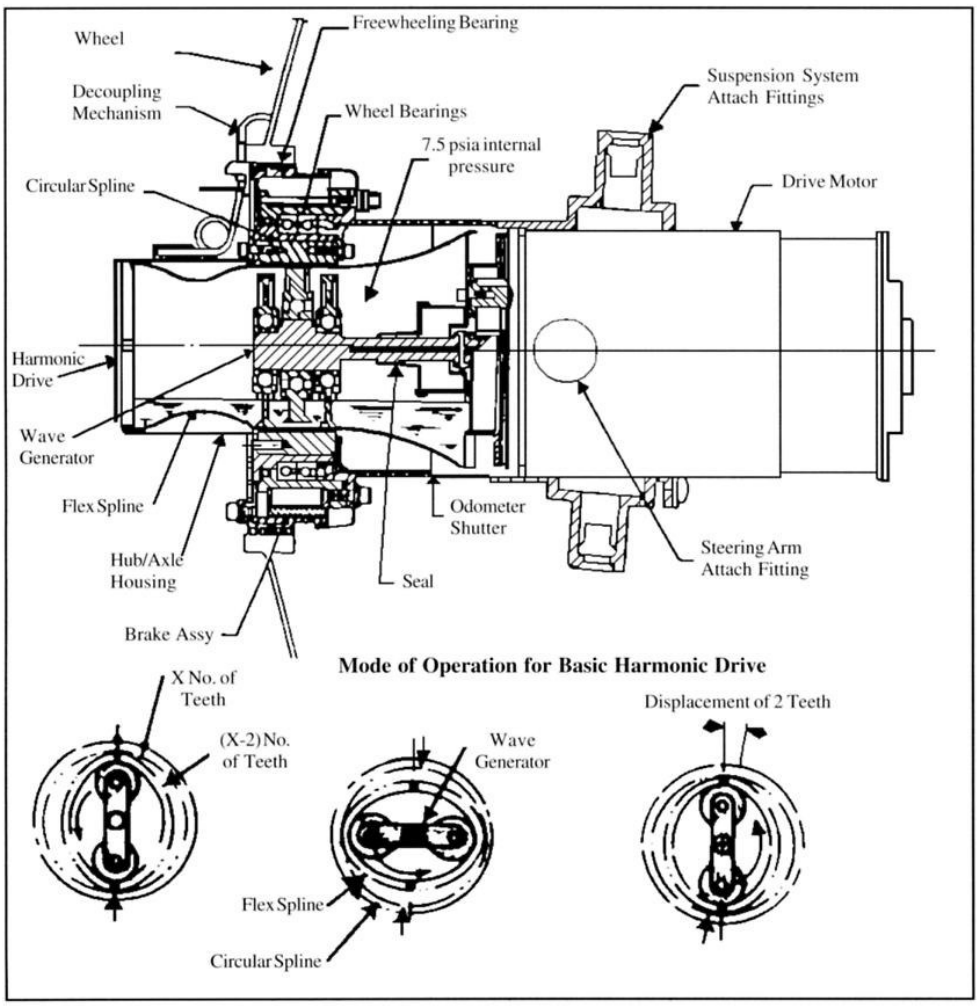

Fig. 15 Harmonic Drive Unit Used for Traction Power on the LRV.

Each wheel had an independent traction drive:

"Each of these traction drives contains a 1/4 hp series wound d.c. motor with a maximum rotational speed approaching 10,000 rev/min, subsequently driving through a harmonic drive gearing arrangement with an 80/1 stepdown ratio. An eccentric wave generator (not unlike a short crankshaft) internal to a flexline is directly coupled to the motor and when rotating provides a sinusoidal motion of the toothed flexspline, which then engages a toothed circular spline. There are two less teeth on the circular spline; hence, as the wave generator rotates, the circular spline indexes, thereby imparting motion to the wheel (fig. 15). This design is a hermetically sealed, totally welded unit, which

allows the motor to run in nonvacuum conditions, thus preventing possible deleterious effect on motor brushes. A 7 1/2 lb/in^2 nitrogen charge is maintained in the motor and drive housing to aid in heat transfer (fig. 16). The brake assembly is also within this traction-drive assembly. Still another feature is the incorporation of a magnetic reed switch in each assembly which is activated nine times for each wheel revolution generating pulses for an odometer input. These pulses are subsequently used by vehicle electronics for speed and navigation calculations. Reversal is accomplished by reversing the armature polarity of the drive motor" [37].

Astronaut Edwin "Buzz" Aldrin, in turn, made a playful suggestion for an LRV wheel to Dr. Bekker (fig. 17).

The braking system was both dynamic, using the drive motors, and mechanical, utilizing conventional shoes and drums. Steering was of a modified Ackerman geometry used on terrestrial automobiles in which the inner wheel, during turns, pivots slightly more than the outer one to prevent scuffing. Both the front and rear wheels were steerable, in opposite directions, permitting the rover to turn within a radius of 3.1 m or approximately its own length. Additionally, the steering mechanisms for the front and rear wheels were independent and could be manually decoupled to permit steering by either set once the other were locked in the forward position. Steering power was provided by two 0.1 hp, series-wound, 500-rpm motors. Thus, there was a redundancy in steering.

Steering, speed, and braking of the vehicle were incorporated into a single control that could be operated by one hand. It was located between the two astronauts and could be operated by either of them. The T-shaped handle resulted from a design change initiated by the astronauts. Originally, a "pistol" grip similar to that in the Apollo command module had been developed. However, the astronauts felt that the pressurized glove of their spacesuit would work better on a T-handle (fig. 18). The single control was pivoted by the astronaut as follows:

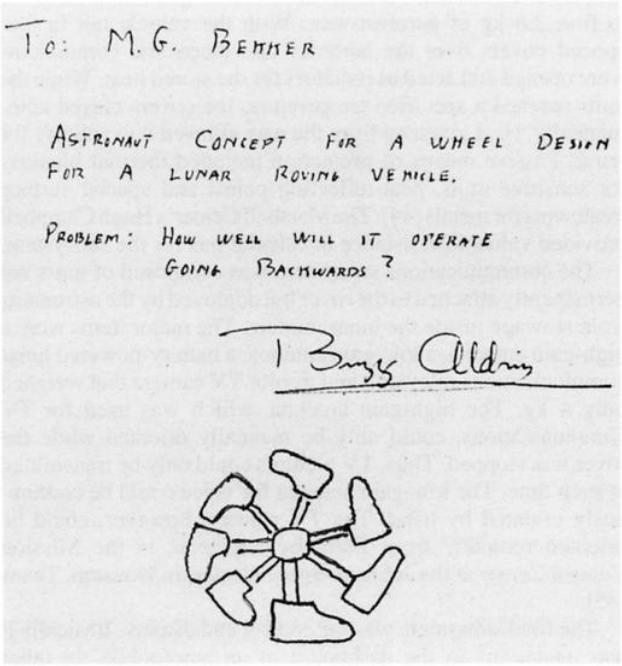

Fig. 17 Astronaut "Buzz" Aldrin Playfully suggested this concept for an LRV Wheel to Dr. M.G. Bekker.

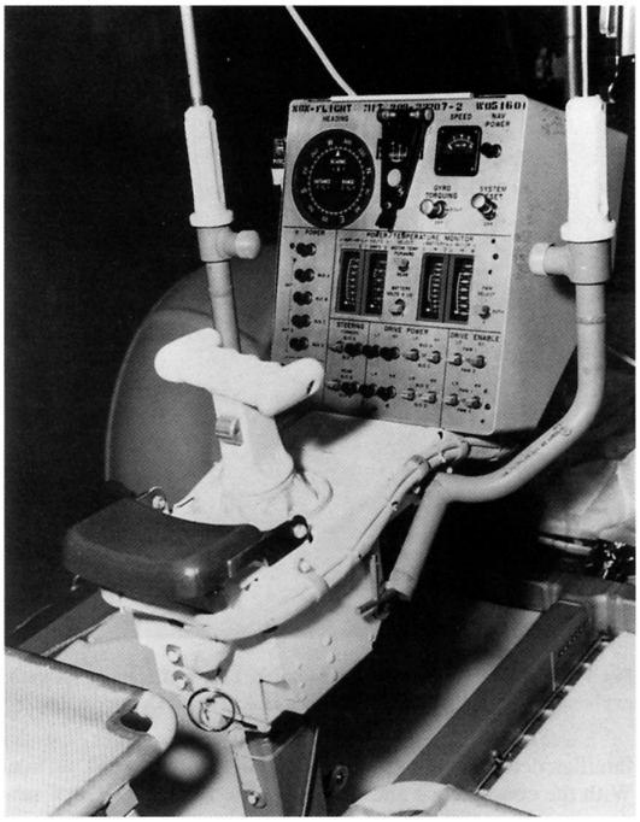

Fig. 18 Apollo Astronauts Suggested a T-Shaped Handle Steering Control for the LRV.

(1) To increase forward speed, he pushed the handle forward.

(2) To go into reverse he activated a switch on the handle and pulled backward on it.

(3) To turn either right or left, he tilted the control in the appropriate direction.

Without the reverse enable switch on, backward force on the handle applied dynamic braking by reversing the wheel motors. Pulling the control completely to the rear activated the mechanical brake, which would hold the vehicle on a slope as great as 35 deg. The electronics for the drive control were in a thermally protected compartment on the forward chassis [38].

The Boeing Co. proposal had suggested a very complex navigation system. Since the Moon has no magnetic field and hence no north or south poles, compasses were of no use. Boeing turned to a wholly new guidance system based upon those of long-range guided missiles using strapped-down gyroscopes and integrating accelerometers. However, the objections to it were immediate from NASA, especially the astronauts, who voiced their opinion as to its worth. It was simply too costly and the errors inherent in the system were significant. There was a question of whether the gyroscopes proposed could withstand the rough surface of the Moon without losing accuracy. However, the most significant factor weighing against the subsystem was that it had never been built and tested. It was not likely to be so done within the rigid time schedule demanded by the contract [39]. The unit needed for rover was a very simple device displaying data with which the astronauts were familiar and experienced. As pilots, they were used to a compass heading and a range to a destination, knowing their distance covered, a

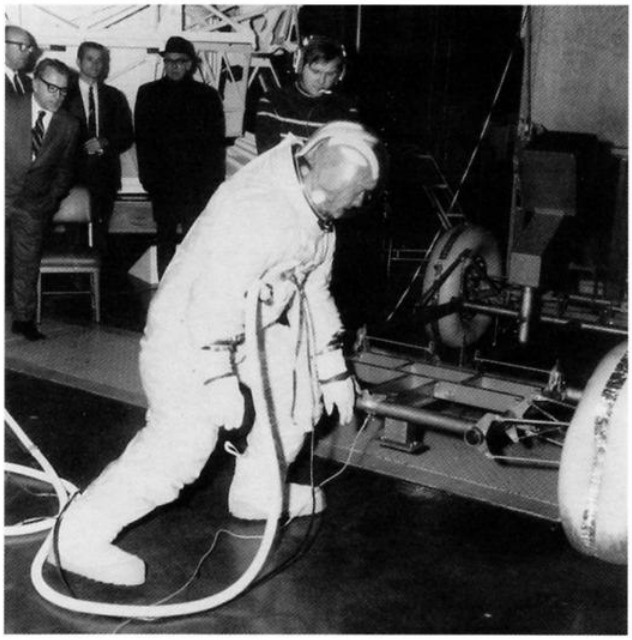

Fig. 19 MSFC Engineer Willi Prasthofer, Left and leaning forward, explains LRV Deployment Mechanism as Astronaut Demonstrates.

familiar dead-reckoning system of navigation would suffice. With the concurrence and support of the Boeing Co., that saw the cost advantages and time savings in such a system, MSFC's Astrionics Laboratory formed a team consisting of Peter Broussard, E. C. Smith, and B. F. Walls who developed and tested a relatively simple dead-reckoning navigation system to do the job.

"The Navigation System consisted of three major components. They were the Directional Gyro (DG), odometers on each traction drive assembly that provided distance and speed information, and a small solid state computer called a SPU. The navigation system was based on the principle that when starting a sortie from a known point, entering speed, direction and distance traveled information into an onboard computer, and then computing vehicle position from these data by solving a relatively simple trigonometric problem, would provide bearing and distance back to the LM. Inputs to the navigation subsystem were changes in the LRV direction with respect to Lunar North (obtained from the directional gyro) and odometer pulses that were obtained from the wheel rotation of the third fastest wheel. For each increment of distance measured by the odometer circuitry, the Signal Processing Unit (SPU) would calculate the East-West and North-South distances traveled based on vehicle heading data obtained from the gyro. These distances were summed with related distances already in the registers, and range and bearing to the LM automatically calculated and then displayed on the Control and Display Console.

The overall accuracy requirements of the navigation system were that the system needed to be capable of determining the bearing to the LM relative to Lunar North within ±6 deg. at a radius of 5 km from the LM. In addition, the distance from the LRV to the LM had to be within ±600 meters, again at a radius of 5 km. The system had to be capable of displaying the distance traveled at any point in the traverse to an accuracy of ±2%" [40].

A prototype unit was built by the Astrionics laboratory of MSFC early in 1970 and tested in the lunar-like terrain near Flagstaff, Arizona, in November of the same year.

The deployment subsystem, at first, was meant to be automatic with a manually activated redundant feature. However, as design proceeded on the automatic subsystem, it became evident that there was simply no way to test it in a one-sixth gravity environment. Thus, a team of engineers led by Willi Prasthofer under the direction of Gustov Kroll, former Peenemuendians of the von Braun team and of the Marshall Center's Astronautics Laboratory, set to work on the problem (fig. 19). The device that emerged consisted of a series of braked reels with cables and cloth tapes, and pulleys (figs. 20, 21). It was tested extensively using one of the one-sixth gravity vehicles at the assembly plant of the lunar module [41].

The remaining subsystems offered few major problems to designer and manufacturer.

The electric power supply consisted essentially of two storage batteries and associated switches, wiring and meters for monitoring, control and distribution of power. The two batteries, of the silver-zinc type, had a nominal rating of 36 v, and a minimum capacity of 105 amp/hr. Either battery could power the rover by itself. However, two were provided for reliability and, in operation, furnished power together [42].

The crew station subsystem was simply two seats for the astronauts, hand and foot holds and fenders for the wheels. The seats were made of aluminum tubing and woven nylon fabric strips. Being as safety conscious on the Moon as on Earth, the astronauts also had seat-belts. The astronauts made their major engineering contributions to the design of the rover in its crew station. During one-sixth gravity flights aboard a KC-135 aircraft, in January and March 1970, they discovered that footholds and hand-holds would be necessary for entering and leaving the vehicle. They also found that swiveled seats would not be required, which simplified one problem and saved weight as well. Additional weight was also saved as a result of their suggestion that a roll-bar would not be required for safety [43].

The thermal protection subsystem was, fundamentally, a passive one. The basic concept was to store heat generated during operation and then radiate it to space when the vehicle was inoperative. Heat produced by electronic units was stored within the units themselves, and in the two primary batteries of the power subsystem. Additionally, heat so generated was used to fuse 2.6 kg of paraffin wax. With the vehicle not in use, special covers over the batteries and electronic components were opened and acted as radiators for the stored heat. When the units reached a specified temperature, the covers closed automatically. Heat given up from the wax allowed it to solidify for reuse. Passive means of protection included thermal blankets for sensitive units, heat-reflecting paints and special surface treatments for metals [44]. The Marshall Center's Hugh Campbell provided valuable assistance in calculations for the subsystem.

The communications subsystem was composed of units not permanently attached to the rover but deployed by the astronauts from stowage inside the lunar module. The major items were a high-gain antenna, a low-gain antenna, a battery-powered lunar communications relay unit and a color TV camera that weighed only 4 kg. The high-gain antenna, which was used for TV communications, could only be manually oriented while the rover was stopped. Thus, TV pictures could only be transmitted at such time. The low-gain antenna for voice could be continuously oriented by hand. The TV camera, however, could be oriented remotely from Earth by engineers in the Mission Control Center at the Johnson Space Center, in Houston, Texas [45].

The final subsystem was the control and display. Basically it was analogous to the dashboard of an automobile. In other words, it was the locus of all meters displaying information needed by the crew and the primary controls for the other subsystems, mainly the navigation, electric power and steering (fig. 18). The upper half of the console displayed data for use in,

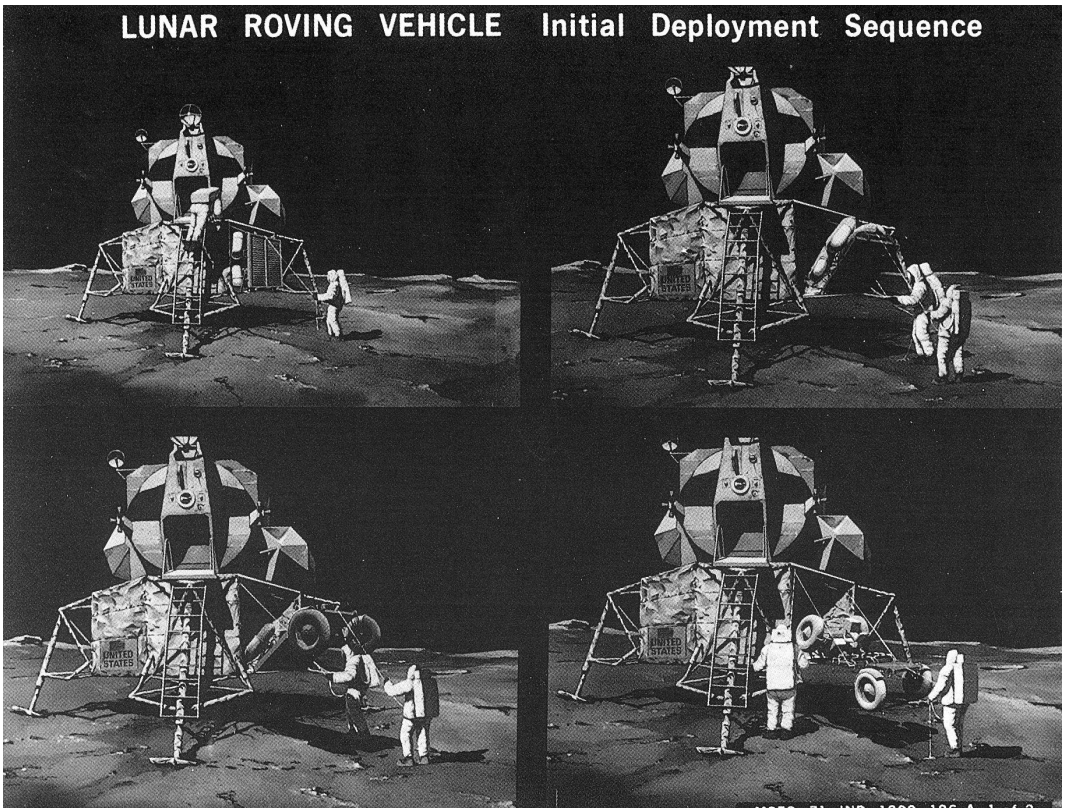

Fig. 20 Initial Steps in LRV Deployment Sequence by Astronauts on the Moon.

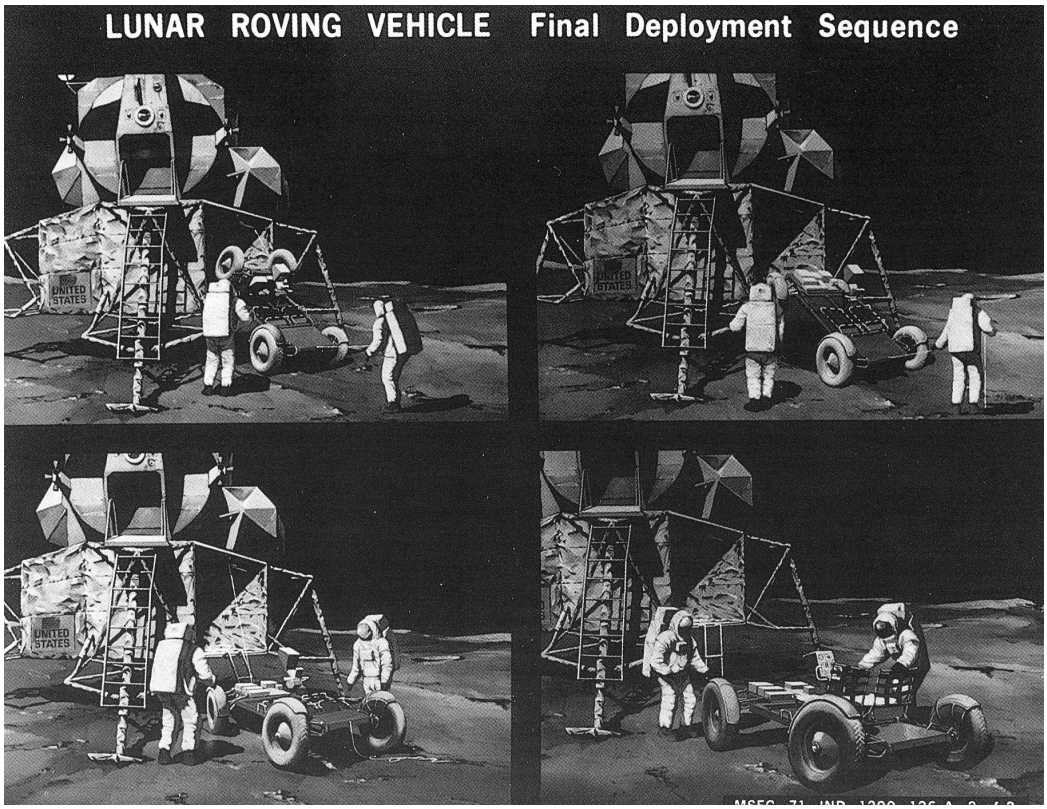

Fig. 21 Final Deployment Steps of LRV.

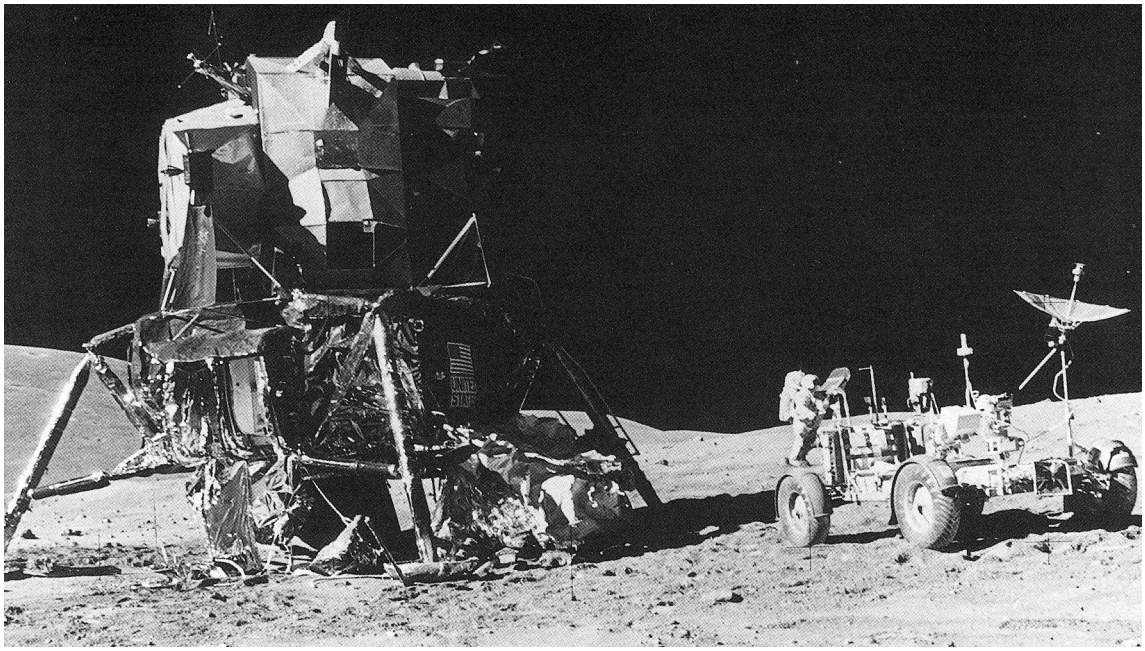

Fig. 22 LRV Deployed on the Moon and Ready for Lunar Traverses.

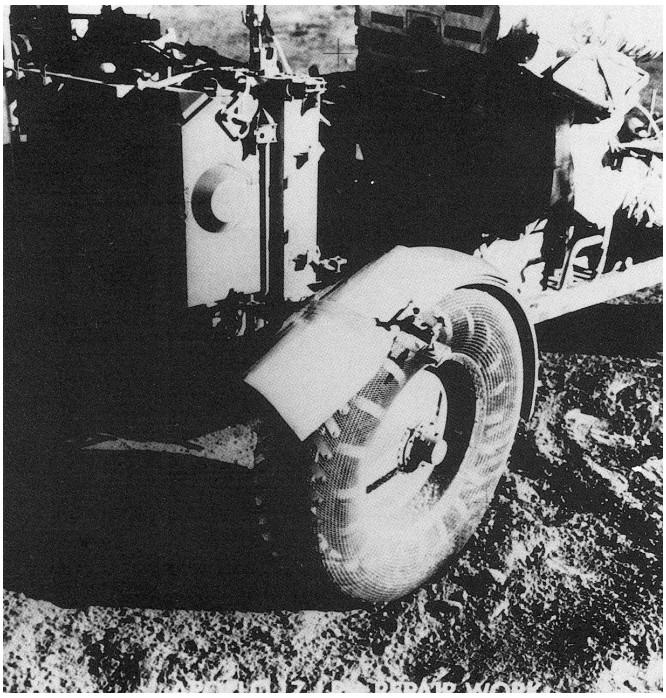

Fig. 23 Replacement Fender Fashioned by Astronauts of Apollo 17

TABLE 1: *LRV Performance Characteristics on the Moon.*

	Apollo 15	Apollo 16	Apollo 17
DRIVING TIME (hrs; min)	3.02	3.26	4.26
SURFACE DISTANCE TRAVERSED (km)	27.80	26.70	35.90
DURATION (hrs; min)	18.30	21.00	21.30
AVERAGE SPEED (km/hr)	9.20	~~12.40~~ 7.78	8.00
MAXIMUM RANGE FROM LUNAR MODULE (km)	5.00	4.50	7.60
LONGEST TRAVERSE (km)	12.50	11.60	20.10
ROCK SAMPLES RETURNED (kg)	77.31	95.71	110.52

and controls for, the navigation subsystem. The lower portion contained the controls and displays for the electric power and steering subsystems. A special feature on top of the console was the caution and warning indicator. It was a hinged panel that released to inform the astronauts that one of the vehicle's batteries had reached a temperature of 51.7°C or that one of the wheel drive motors had reached a temperature of 204.4°C [46].

In retrospect, one can say that the lunar rover was highly successful from the viewpoint of engineering and technology. However, from the viewpoint of management, it was blemished by the stain that often touches space projects: cost overrun. The original contract with NASA to the Boeing Co. was for $19 million. By the end of the project, the cost had risen to $38 million. The contract was underbid by the Boeing Co., which did not fully realize the complexity of the vehicle. Some increases were incurred by NASA because of changes "outside the scope" of the contract. However, these were few, only eight in number. Another factor that helped drive up the costs was the decision to undertake parallel developments in certain areas; for example, a planetary gear and the harmonic gear and brushless electric motors as well as those with brushes. Additionally, there was the requirement to complete all developmental testing before manufacture of the one-sixth gravity qualifications units. However, most of the cost over-run went for salaries as overtime and extra shifts became more frequent to maintain the schedule [47].

Managers at all levels in both government and industry were under a constant pressure to meet the schedule of 17 months throughout the program. Moreover, there tended to be too many people involved in the management of the program: NASA Headquarters, in Washington; MSFC, in Huntsville; Boeing Co., in Kent; General Motors Corp., in Santa Barbara, as well as a host of subcontractors across the country. An additional pressure on management at every level was the constant struggle to keep the weight of the rover to design specifications. During development, every component design and proposed change was examined primarily from two aspects. How much does it affect weight and how does it impact cost? Literally, every gram and penny were considered. Despite the best efforts of engineerss and managers, the first flight model of the rover was overweight by 30 kg [48].

While weight and costs were significant and pacing factors in the development of the lunar rover, they had always to be considered within the overriding framework of safety and reliability. The specified goal for lunar mission success of the vehicle was 0.95. Mission success meant that the rover would perform successfully for its stated period of operation on any particular mission on the surface of the Moon. The goal for survival of the two astronauts while operating the vehicle was an uncompromising 1.0 [49].

4. PERFORMANCE ON THE MOON (Fig. 22)

During the Apollo 15 mission the front wheels did not initially respond to steering commands and the astronauts went to the rear-wheel mode of operation. The remainder of the lunar traverse was made using the dual steering mode. Minor difficulties were experienced with the seat belts of the astronauts but were overcome. Everything considered "the crew was very pleased with the vehicle's performance, particularly, the speed and hill-climbing capability" [50].

The Apollo 16 astronauts also experienced several difficulties, although none threatened the mission. Battery temperatures were higher than expected. There were some failures in instrumentation. A rear fender extension was lost and there was a temporary loss of rear steering [51].

Only two significant anomalies occurred during the Apollo 17 mission. At the beginning of the third traverse, instrumentation indicated Battery 2 temperature was lower than anticipated. A suspected short in a thermistor was the probable cause. A minor problem arose when the chassis locking pins did not fully engage after the rover was deployed. However, the crew used a deployment tool to seat the pins. Before the first traverse, the commander accidentally knocked a fender extension off but the crew effected a field expedient by using a map of the Moon and clamps to repair the damage (Fig. 23) [52]. Other performance characteristics are given in Table 1.

5. CONCLUSION

As in much of the American space program, there was a certain amount of technology transfer resulting from the lunar rover project. Perhaps the "spin-off" with most potential for use on Earth is an observation made by Dr. Leonard S. Wilson, then Chief of the Environmental Sciences Division of the U.S. Army Office of Research, Development, and Engineering, after seeing several of the proposed vehicles for transportation on the Moon: "Are new terrestrial vehicle concepts researched and evaluated as thoroughly as lunar ones? . . . If we have pioneered new vehicle concepts for the Moon, what is in store for Earth - not necessarily for America alone, but all around the world?" [53]. He discussed the problems involved in a systematic approach to the technical, organizational and managerial problems of developing a variety of terrestrial vehicles with Dr. Bekker. With his encouragement and support, Dr. Bekker, having finished his work on lunar rover, turned to Earth rovers and wrote *Introduction to Terrain-Vehicle Systems* (Ann Arbor, Michigan: University of Michigan Press, 1969).

In publishing his comprehensive systems approach to such vehicle development, Dr. Bekker said, "We always had enough trouble with ground mobility on this planet, but it took the most recent Moon exploration to establish a rational approach to the optimization of the wheel invented 5000 years ago. I doubt if automotive and affiliated industries ever expected this kind of spin-off from space research . . ." [54].

One of the more interesting "spin-offs" from the rover was the interest in its navigation subsystem shown by the U.S. Bureau of Mines. The prototype unit that had been developed by the Marshall Center was made available to the bureau for possible use on a remotely controlled vehicle for surveillance and rescue operations in various mines [55]. In 1982, the Johnson Space Center, in Houston, Texas, demonstrated an adaptation of the LRV hand controller that permitted disabled persons to operate an automobile by using it. The modified unit could be switched off to allow normal use of the vehicle and required no extensive modification to the automobile.

Thus, the Lunar Roving Vehicle was the first manned surface transportation to operate on a celestial body other than Earth. By the most strict definition, it was not a spacecraft. However, it had to function in an environment almost as hazardous and forbidding as interplanetary space. That the vehicle was designed, developed, tested and manufactured within a span of only 17 months is a tribute to the skills, both engineering and managerial, of American industry and governmental research organizations. That the vehicle performed as specified upon the Moon is a further tribute to the men and women who produced it.

Following the successful Apollo 15 mission, NASA received several offers to buy the LRV left on the Moon. Made mainly by American used car sales companies, the offers ranged from $100 by Cagon Motors, Inc., of Pomona, California, to $1000 from Mario F. Reyende, of Hawthorn, California. NASA artfully dodged the issue in a typical bureaucratic maneuver. The

offers were shuffled from center to center and NASA Headquarters until the would-be purchasers gave up.

Perhaps the best summary of the LRV history is that of Astronaut Harrison "Jack" Schmitt, of Apollo 17, who said: "After winning the mobility competition against the Lunar Flyer, the Lunar Rover proved to be the reliable, safe and flexible lunar exploration vehicle we expected it to be. Without it, the major scientific discoveries of Apollo 15, 16, and 17 would not have been possible; and our current understanding of lunar evolution would not have been possible" [56].

REFERENCES

1. Mitchell R. Sharpe, "Lunar Roving Vehicles, Models 1901, 1915, and 1818", ***Spaceflight***, **18**, No. 2, February 1976, p.56.
2. *Ibid.*, pp.56-57.
3. *Ibid.*, p.57.
4. Albro T. Gaul, *The Complete Book of Space Travel*, New York, World Pub. Co., 1956, p.154.
5. Hugo Gernsback, *1961 Forecast*, New York, Hugo Gernsback, 1960, pp.8-11.
6. Arthur C. Clarke, *Expedition to Earth*, New York, Ballantine Books, 1953, p.119.
7. Cornelius Ryan, *Conquest of the Moon*, New York, Viking Press, 1953, p.153.
8. Hermann Oberth, *Man into Space*, New York, Harper and Bros., 1957.
9. Hermann Oberth, *Moon Car*, New York: Harper and Bros., 1959, p.32 *et sequa*.
10. "Project Horizon, Phase 1 Report, *A US Army Study for the Establishment of a Lunar Military Outpost*, **2**." Redstone Arsenal, Alabama: US Army Missile Command, June 8, 1959, p.38. See also "Army Lunar Construction and Mapping Program," Report of the Committee on Science and Astronautics, US House of Representatives, Eighty-sixth Congress, Second Session, House Report No. 1931. Washington: US Government Printing Office, 1960, p.7. For further details, see F.I. Ordway *et al*, "Project Horizon, an Early Study of a Lunar Outpost". *Acta Astronautica*, **17**, No. 10, 1988, pp.1105-1121.
11. Georg von Tiesenhausen, "Preliminary Presentation Notes Lunar Trafficability Study." Huntsville, Alabama: Marshall Space Flight Center, November 30, 1962, pp.11-12.
12. "Astronautical and Aeronautical Events of 1962," Report of the National Aeronautics and Space Administration to the Committee on Science and Astronautics US House of Representatives, Eighty-eighth Congress, First Session, June 12, 1963. Washington: U.S. Government Printing Office, 1963, pp.173-174.
13. "*Lunar Logistic System*, **Vol. IX**, Mobility on the Lunar Surface, MTP-M-63-1." Huntsville, Alabama: Marshall Space Flight Center, March 15, 1963. See also **Vol. X**, pp.126-153, 164-171.
14. Leo L. Jones and Ruth Jarrell, *"History of the George C. Marshall Space Flight Center from January 1 through December 31, 1965"*, **Vol. 1**, MHM-11. Huntsville, Alabama: Marshall Space Flight Center, April 1968, p.293.
15. "Lunar Roving Vehicles," ***Spaceflight***, **10**, No. 2, February 1968, pp.42-43.
16. "Snow Cruiser," Mechanical Engineering, Vol. 61, No. 39, September 1939. See also, "The Snow Cruiser, a Mobile Base for Antarctica," *Scientific American*, **162**, No. 1, January 1939, p.25.
17. "Dual-Mode Roving Vehicles for Apollo Lunar Surface Exploration," Project 20-22124, TR68-25. Santa Barbara, California: AC Electronics-Defense Laboratories, June 1968. Also, letter from Dr. Sam Romano, Georgetown University, to Mitchell R. Sharpe, 3 March 1994.
18. Letter from the Rover Co. to Boeing International Corp., Birmingham, England, June 23, 1971.
19. "The Evolution of Locomotion: A Conjecture into the Future of Vehicles," Paper No. 60-WA-303, presented at the Winter Annual Meeting of the American Society of Automotive Engineers, New York, November 27-December 9, 1960. "Mechanics of Off-the-Road Locomotion," James Clayton Lecture, delivered at the Institution of Mechanical Engineers, London, November 13, 1962. "Land Locomotion on the Surface of Planets," *American Rocket Society Journal*, **32**, No. 11, November 1962, pp.1651-1659.
20. "Mechanics of Locomotion and Lunar Surface Vehicle Concepts," Paper No. 632K presented at the Automotive Engineering Congress, January 1963. See also, "Accomplishments and Future Tasks in Off-Road Transportation," public lecture presented at Carleton University, Ottawa, November 16, 1971.
21. Interview with S.F. Morea, MSFC, June 26, 1977.
22. "Lunar Roving Vehicle Statement of Work, July 3, 1969, RFP #IL-LRV-1." Huntsville, Alabama: Marshall Space Flight Center, July 3, 1969, p.2.
23. *Loc cit.*
24. "Statement of Work," pp.15-16.
25. *Op.cit.*, pp.15-27.
26. Interview with S.F. Morea, MSFC, June 26, 1977.
27. Zack Strickland, "Lunar Roving Vehicle Tested with Lunar Module," *Aviation Week and Space Technology*, **94**, No. 11, March 15, 1977, p.20.
28. Astronautics and Aeronautics, 1970. Washington: National Aeronautics and Space Administration, 1972, p.29.
29. E.G. Cowart, "Lunar Roving Vehicle Design Certification Review Report, Vol. 1 - Summary," D209-10074-1. Kent, Washington: The Boeing Co., March 22, 1971, p.1.1.
30. A.L. Stone, "Qualification of the Lunar Roving Vehicle," Paper No. A72-32601 15-05, presented at annual meeting of the Institute of Environmental Sciences, New York, May 1-4, 1972.
31. A.J. Green and K.J. Melzer, "Performance of Boeing LRV Wheels in a Lunar Soil Simulant, Report 1, Effect of Wheel Design and Soil, Tech. Rpt. M-71-10." Vicksburg, Mississippi: U.S. Army Engineer Waterways Experiment Station, December 1971, p.xiii.
32. Interview with S.F. Morea, MSFC, June 26, 1977. Interview with Peter H. Broussard, MSFC, July 6, 1977. See also, Richard G. O'Lone, "Lunar Rover Program Spurred," *Aviation Week and Space Technology*, **94**, No. 7, February 15, 1971, p.49-50.
33. "Lunar Roving Vehicle Operations Handbook," LS006-002-2H. Huntsville: The Boeing Co., July 7, 1971, pp.1.3-1.13.
34. "Moon Cars," *Motor Trend*, Vol. 22, No. 8, August 1970, pp.49, 98-99. Also see, "Apollo 16: Three Days in Descartes," *Machine Design*, **44**, No. 8, April 6, 1972, pp.24-25.
35. "Locomotive Engines and Other Carriages," Patent No. 1849, to Thomas Rickett, of the Castle Foundry, Buckingham, for the invention of improvements in locomotive engines and other carriages to facilitate their transit. Dated the 13th August, 1858, and sealed the 25th January 1859.
36. M.G. Bekker and F. Pavlics, "Lunar Roving Vehicle Concept: A Case Study, Staff Paper SP63-205," General Motors Research Laboratories, May 1963.
37. E.G. Cowart, "Lunar Roving Vehicle: Spacecraft on Wheels," *The Institution of Mechanical Engineers (London), Proceedings 1973*, **Vol. 187**, 45/73, pp.468-469. For further details on the harmonic drive mechanism, see "Harmonic Drive, Principles and Performance," Beverly, Massachusetts: United Shoe Machinery Corp., 1959. "Harmonic Drive, Mechanical Power Transmission Systems," Beverly, Massachusetts: United Shoe Machinery Corp., 1965. John H. Carlson, "Harmonic Drives for Servomechanisms," *Machine Design*, **Vol. 57**, No. 1, January 10, 1985, pp.102-104. This drive unit was earlier used by MSFC in its Pegasus Satellite and later on its Skylab Space Station and Hubble Space Telescope as well as the ground transporter for the S-II stage of the Saturn 5 launch vehicle.
38. "Lunar Roving Vehicle Operations Handbook, Contract NAS8-25145, LS006-002-2H, April 19, 1971" Huntsville, Alabama: The Boeing Co., pp.1-5, 1-15, 1-16, 1-23.
39. Interview with S.F. Morea, MSFC, June 26, 1977. Interview with Peter H. Broussard, MSFC, July 6, 1977. Interview with B.F. Walls, MSFC, July 6, 1977.
40. S.F. Morea, "'The Lunar Roving Vehicle' a Historical Perspective," Paper No. LBS-88-203 presented at the Lunar Bases & Space Activities in the 21st Century, West Galleria Hotel, Houston, Texas, April 5-7, 1988.
41. *"Lunar Roving Vehicle Operations Handbook,"* pp.1-64 - 1-69.
42. *Ibid.*, pp.1-38 - 1-32.
43. *Ibid.*, pp.1-49 - 1-53.
44. R.G. Elliott, C.J. Paoletti, and M.A. Britt, "Lunar Roving Vehicle Thermal Control System," Paper No. 72-ENAv-27, presented at the American Society of Mechanical Engineers, Environmental Control and Life Support Systems Conference, San Francisco, August 14-16, 1972.
45. Zack Strickland, "Lunar Rover Ready for Moon Travel," *Aviation Week and Space Technology*, **94**, No. 21, March 21, 1971, p.45.
46. *"Lunar Roving Vehicle Handbook,"* pp.1-47 - 1-68.
47. "Lunar Rovers Cost $38 Million," *Aviation Week and Space Technology*, **95**, No. 5, August 2, 1971, p.18.
48. Interview with S.F. Morea, MSFC, June 26, 1977.
49. *"Lunar Roving Vehicle Statement of Work,"* pp.54-55.
50. "Apollo 15 Mission Report, NASA TM-X-68394," Manned Spacecraft Center, Houston, Texas, December 1971.
51. "Apollo 16 Mission Report, NASA TM-X-68635," Manned Spacecraft Center, Houston, Texas, August 1972, pp.8-1 - 8-2.
52. "Apollo 16 Mission Report, NASA TM-X-69292," Manned Spacecraft Center, Houston, Texas, March 1973, pp.9-1 - 9-3.
53. M.G. Bekker, *Introduction to Terrain-Vehicle Systems*. Ann Arbor, Michigan: University of Michigan Press, 1969, p.vii.
54. "Mechanisms Conference, Emphasis on Spatial Mechanisms Seen at International Meeting," *Mechanical Engineering*, **Vol. 90**, No. 12, December 1968, p.95.
55. Interview with Peter H. Broussard, MSFC, July 6, 1977.
56. Letter from Harrison Schmitt to Mitchell R. Sharpe, March 5, 1993.