**Testimony before the House of Representatives**
**Committee on Science, Space, and Technology**

# Exploration of the Solar System: From Mercury to Pluto and Beyond

Dr. Alan Stern
Principal Investigator
New Horizons Mission

National Aeronautics and Space Administration

PRESS KIT | July 2015

# New Horizons Pluto Flyby

www.nasa.gov

# Table of Contents

NASA's New Horizons Nears Historic Pluto Flyby ..... 5

Media Services Information ..... 6

Quick Facts ..... 7

Meet Pluto ..... 9

Why Pluto and the Kuiper Belt? ..... 12

The Science of New Horizons ..... 12

New Horizons Science Team ..... 17

Mission Overview ..... 18

Spacecraft Systems and Components ..... 30

Science Instruments ..... 34

# Media Contacts

## Policy/Program Management

**NASA Headquarters**
Dwayne Brown
(202) 358-1726
dwayne.c.brown@nasa.gov

Laurie Cantillo
(202) 358-1077
laura.l.cantillo@nasa.gov

## Mission Management
## Spacecraft Operations

**The Johns Hopkins University Applied Physics Laboratory**
Michael Buckley
(240) 228-7536 or (443) 778-7536
michael.buckley@jhuapl.edu

## Principal Investigator Institution
## Science and Science Operations

**Southwest Research Institute**
Maria Stothoff
(210) 522-3305
maria.stothoff@swri.org

# NASA's New Horizons Nears Historic Pluto Flyby

In July 2015, NASA — and the United States — will complete the reconnaissance of the planets by exploring the Pluto system with New Horizons.

The fastest spacecraft ever launched, New Horizons has traveled more time and distance — more than nine years and three billion miles — than any space mission in history to reach its primary target. Its flyby of Pluto and Pluto's system of at least five moons on July 14 will complete the initial exploration of the classical solar system while opening the door to an entirely new realm of mysterious small planets and planetary building blocks in the Kuiper Belt.

The flyby will also cap a five-decade-long era of solar system reconnaissance that began with Venus and Mars in the early 1960s, and continued through first looks of Mercury, Jupiter and Saturn in the 1970s and Uranus and Neptune in the 1980s. Meaningfully, the July 14 flyby of Pluto will occur 50 years to the day after humans first explored Mars with NASA's Mariner 4 on July 14, 1965.

Reaching this "third" zone of our solar system — beyond the inner, rocky planets and outer gas giants — has been a space science priority for years, because it holds building blocks of our solar system that have been stored in a deep freeze for billions of years. In the early 2000s the National Academy of Sciences ranked the exploration of the Kuiper Belt — and particularly Pluto and its largest moon, Charon — as its top priority planetary mission for the coming decade. New Horizons — a compact, lightweight, powerfully equipped probe packing the most advanced suite of cameras and spectrometers ever sent on a first reconnaissance mission — is NASA's answer to that call.

Pluto, the largest known body in the Kuiper Belt, offers an extensive nitrogen atmosphere, complex seasons, strangely distinct surface markings, an ice-rock interior that may harbor an ocean, and at least five moons for study. Among Pluto's five moons, its largest — Charon — may itself sport an atmosphere or an interior ocean, or both, and possibly even evidence of recent surface activity. The smaller moons (named Nix, Hydra, Styx and Kerberos) are scientifically valuable bonuses, since New Horizons officially began in 2001 as a mission to just Pluto and Charon, years before the four smaller moons were even discovered.

Hazards to flight could exist in the Pluto system due to debris ejected from Pluto's small satellites. New Horizons mission planners conducted an intensive search for hazards in May and June 2015 and were prepared, in the unlikely event that significant hazards were found, to divert the craft's trajectory or use its dish antenna as a shield to protect the spacecraft. On July 1, the team announced that the spacecraft would remain on its optimal path through the Pluto system instead of making a late course correction to detour around any hazards.

New Horizons' six-month encounter with the Pluto system started in January 2015 and culminates in the July flyby. Its suite of seven science instruments — which includes cameras, spectrometers, radio science, and plasma and dust detectors — will map the geology of Pluto and Charon; map their surface compositions and temperatures; examine Pluto's atmosphere and search for an atmosphere around Charon; study Pluto's smaller satellites; and look for rings and new satellites around Pluto.

Teams operating and navigating the spacecraft have been using ever-improving imagery from New Horizons to refine their knowledge of Pluto's location and skillfully guide New Horizons toward a target point about 7,750 miles (12,500 kilometers) from Pluto's surface. That targeting is critical, since the computer commands that will orient the spacecraft and point its science instruments are based on knowing the exact time and place that New Horizons passes Pluto.

And the work doesn't end with this July's flyby. Because it gets one shot at its target, New Horizons is designed to gather as much data as it can, as quickly as it can – taking about 100 times more data on close approach than it can send home before flying away. Although the spacecraft will send select, high-priority datasets home in the days just before and after close approach, the mission will continue returning the data stored in onboard memory for a full 16 months.

The New Horizons mission is one of the great explorations of our time; there's so much we don't know, not just about Pluto, but about similar worlds as well. Scientists won't be rewriting textbooks with this historic mission — they'll be writing them from scratch.

The Johns Hopkins University Applied Physics Laboratory, Laurel, Maryland, manages the New Horizons mission for NASA's Science Mission Directorate in Washington, DC. Alan Stern, of the Southwest Research Institute, is the principal investigator and leads the mission. SwRI leads the mission, the science team, payload operations and encounter science planning. APL designed, built and operates the New Horizons spacecraft. New Horizons is part of the New Frontiers Program, managed by NASA's Marshall Space Flight Center in Huntsville, Alabama.

For more information on New Horizons, visit: http://www.nasa.gov/newhorizons and http://pluto.jhuapl.edu.

# Media Services Information

## News and Status Reports

NASA and the New Horizons team will issue periodic status reports on mission activities and make them available online at www.nasa.gov/newhorizons and http://pluto.jhuapl.edu. NASA will release several "Notes to Editors" before the Pluto flyby with details of press accreditation, media briefings, special press opportunities, on-site logistics at the Johns Hopkins Applied Physics Laboratory, and NASA TV and Web coverage.

## NASA Television

NASA Television is carried on the Web and on an MPEG-2 digital signal accessed via satellite AMC-6, at 72 degrees west longitude, transponder 17C, 4040 MHz, vertical polarization. It is available in Alaska and Hawaii on AMC-7, at 137 degrees west longitude, transponder 18C, at 4060 MHz, horizontal polarization. A Digital Video Broadcast compliant Integrated Receiver Decoder is required for reception. For NASA TV information and schedules on the Web, visit www.nasa.gov/ntv.

## On-Site Media Logistics

News media representatives covering the Pluto flyby in person must be accredited through NASA and the Johns Hopkins Applied Physics Laboratory. Registration ended June 30, 2015. Journalists may call (240) 228-7536 for more information. Resources for journalists, including media guidelines, and a map of APL's main campus may be found at http://www.jhuapl.edu/MediaResources/.

## New Horizons on the Web

New Horizons information — including an electronic copy of this press kit, press releases, fact sheets, mission details and background, status reports and images — is available on the Web at http://pluto.jhuapl.edu and www.nasa.gov/newhorizons. Mission updates are also available on Twitter (@NASANewHorizons) and Facebook (www.facebook.com/new.horizons1).

# Quick Facts

## Mission

**Launch:** January 19, 2006, from Launch Complex 41 at Cape Canaveral Air Force Station, Florida.

**Launch vehicle:** Lockheed Martin Atlas V-551 (core Atlas booster [with five solid rocket boosters attached] with a Centaur upper stage); and a Boeing STAR-48B solid-propellant rocket third stage.

**Launch vehicle height (with payload):** 59.7 meters (196 feet).

**Launch vehicle weight (fully fueled):** Approximately 575,000 kilograms (1.26 million pounds).

**Jupiter Gravity Assist:** February 28, 2007.

**Jupiter closest approach distance and speed at Jupiter:** About 2.3 million kilometers (1.4 million miles) at 21 kilometers per second (47,000 miles per hour).

**Planetary Orbit Crossings:** Moon (9 hours after launch); Mars (April 7, 2006); Asteroid APL (June 13, 2006); Jupiter (Feb. 28, 2007); Saturn (June 8, 2008); Uranus (March 18, 2011); Neptune (Aug. 25, 2014).

**Pluto system flyby:** July 14, 2015

**Pluto closest approach distance and speed:** 12,500 kilometers (about 7,750 miles) at approximately 14 kilometers per second (31,000 miles per hour.)

**Planned Charon closest approach and speed:** About 29,000 kilometers (18,000 miles) at same approximate Pluto flyby speed.

**One-way speed-of-light (radio transmission) time from Pluto to Earth in July 2015:** 4 hours, 25 minutes.

**Pluto distance from Earth in July 2015:** Approximately 4.77 billion kilometers (2.97 billion miles, or just under 32 astronomical units).

## Spacecraft

**Size:** The primary structure is about the size of a baby grand piano; 0.7 meters (27 inches) tall, 2.1 meters (83 inches) long and 2.7 meters (108 inches) at its widest. A 2.1-meter (83-inch) diameter antenna dish is attached to the top deck; the spacecraft measures 2.2 meters (87 inches) tall from the payload attachment fitting on the bottom deck to the top of the dish antenna stack.

**Launch weight:** 478 kilograms (1,054 pounds); included 77 kilograms (170 pounds) of hydrazine propellant and a 30-kilogram (66-pound) science instrument payload.

**Power:** Total power available for the Pluto encounter is 202 watts from a single radioisotope thermoelectric generator.

**Propulsion:** 16 hydrazine-fueled thrusters, used for trajectory adjustments and attitude control.

**Science instruments:** The New Horizons science payload is the most capable

### A Mission of Many Firsts

New Horizons is the first . . .

- mission to Pluto
- mission to a double planet
- mission to an ice dwarf planet
- mission to study Kuiper Belt Objects
- mission since Voyager in the 1970s to an unexplored planet
- principal investigator (PI)-led outer planets mission
- planetary mission to carry a student-built instrument
- outer planets mission led by the Johns Hopkins Applied Physics Laboratory and Southwest Research Institute
- NASA New Frontiers mission

New Horizons is also the fastest spacecraft ever launched, has traveled the farthest distance to reach its primary science target, and completes the first reconnaissance of our solar system's family of planets.

suite of instruments ever launched on a first reconnaissance mission to an unexplored planet. It includes an ultraviolet imaging spectrometer to probe atmospheric composition and surface structure; a visible and infrared camera/spectrometer to obtain high-resolution color maps and surface composition maps; a long-range telescopic camera for high-resolution surface images; particle spectrometers to measure solar wind charged particles in and around Pluto's atmosphere; a detector to measure masses of space-dust particles; and two copies of a radio science experiment to examine atmospheric structure, surface thermal properties and the planet's mass.

## Program

**First mission** in NASA's New Frontiers Program, a class of principal investigator-led projects larger than Discovery missions.

**Cost:** Approximately $720 million (including spacecraft and instrument development, launch vehicle, mission operations, data analysis, and education/public outreach) covering 2001 — 2017.

# Meet Pluto

## General

- First dwarf planet discovered by an American, Lowell Observatory astronomer Clyde Tombaugh in 1930.
- It is the final classical planet in the solar system to be visited by a spacecraft.
- Pluto has five known moons — Charon, discovered in 1978; Nix and Hydra, discovered in 2005; Styx, discovered in 2011; and Kerberos, discovered in 2012.
- Charon is so large (half of Pluto's size, same diameter as Texas) that the Pluto-Charon system makes up a "double planet," the only one in our solar system. Together Pluto and Charon orbit around their common center of gravity in the space between them.
- Pluto is unusually difficult to study from Earth because it is so small and far away. It is 50,000 times fainter than Mars, with less than 1% of the red planet's apparent diameter when viewed from Earth.
- Pluto is the largest and brightest known member of the Kuiper Belt — the solar system's third zone — the vast region of ancient, icy, rocky bodies stretching almost 2 billion miles beyond Neptune's orbit.
- The International Astronomical Union controversially opted in 2006 to classify Pluto and recently discovered large Kuiper Belt Objects as dwarf planets; debate continues on Pluto's planetary classification.

## Orbit

- Orbits the Sun once every 248 Earth years.
- Average distance from the Sun is 5.9 billion kilometers (3.7 billion miles), about 40 times farther out than Earth.
- Elliptical (oval-shaped) orbit; ranging from 4.4 billion kilometers (2.8 billion miles) to 7.4 billion kilometers (4.6 billion miles) from the Sun.
- Latest closest approach to the Sun was in 1989; from 1979-1999 Pluto was closer to the Sun than Neptune.
- Orbit is tilted 17 degrees from the ecliptic plane — the plane where the inner planets orbit the Sun — a higher "inclination" than terrestrial planets or gas giants (Mercury is next at 7 degrees).
- Pluto is tipped on its side — its rotational north pole is tilted 118 degrees from celestial north, or 28 degrees below the ecliptic plane.
- Pluto and Charon both rotate every 6.4 Earth days.
- Charon orbits Pluto once every 6.4 Earth days, from a distance of 19,636 kilometers (12,201 miles); Charon orbits at Pluto's "synchronous" distance, with one side always facing Pluto.
- Pluto and Charon are locked in a gravitational resonance where not only does Charon keep the same face to Pluto (just like Earth's moon faces Earth) but also, Pluto always sees the same face of Charon.

## Physical Characteristics: Pluto

- Exact diameter is uncertain to about +/-25 kilometers, but close to 2,380 kilometers (1,500 miles); the circumference around Pluto's equator is the same as the distance from Manhattan to Maui.
- Surface composition includes nitrogen, carbon monoxide, methane and ethane ices; many other materials may also be present, but undiscovered.
- Has a tenuous but complex atmosphere made mostly of nitrogen, with traces of methane, carbon monoxide, and some heavier hydrocarbons.
- The atmosphere undergoes extreme seasonal changes as Pluto orbits the Sun.
- Atmospheric surface pressure is currently about 50,000 times less than on Earth, about 300 times less than on Mars.
- Low surface gravity, about 6% of Earth's.
- Estimated surface temperature is about minus-233 degrees Celsius (minus-387 degrees Fahrenheit).
- Has a density about twice that of water, indicating it is composed of a mixture of 35% ice and 65% rocky material.
- With ranges of very bright and dark areas, Pluto's surface has more contrast than any planet in the outer solar system.

## Physical Characteristics: Charon

- Diameter is about 1,200 kilometers (745 miles), the largest satellite relative to the planet it orbits.
- Surface known to be mostly water ice, possibly also including ammoniated hydrates.
- No detectable atmosphere (from Earth-based studies).
- Like Pluto, its density (about twice that of water) indicates it is composed of a mixture of 50% ice and 50% rocky material.

## Fast Facts: Hydra, Nix, Styx, Kerberos

Pluto's smaller moons have been hard to study in any detail from afar. New Horizons will change that by flying past them in July 2015, but we do know a few things:

- Hydra is the outermost known moon, orbiting Pluto every 38 days at a distance of approximately 64,700 kilometers (40,200 miles).
- Nix orbits every 25 days at a distance of 48,700 kilometers (30,300 miles).
- Estimated diameters of Nix and Hydra are between 40-150 kilometers (25-95 miles).
- Styx circles Pluto every 20 days between the orbits of Charon and Nix, and is likely just approximately 7 to 21 kilometers (4 to 13 miles) in diameter.
- Kerberos orbits between Nix and Hydra with a 32-day period; estimated diameter is approximately 10 to 30 kilometers (6 to 20 miles).
- Styx and Kerberos are 20 to 30 times fainter than Nix and Hydra.

For more on what we know about the Pluto system — that is, before New Horizons revolutionizes that knowledge — visit: http://pluto.jhuapl.edu/Pluto/index.php

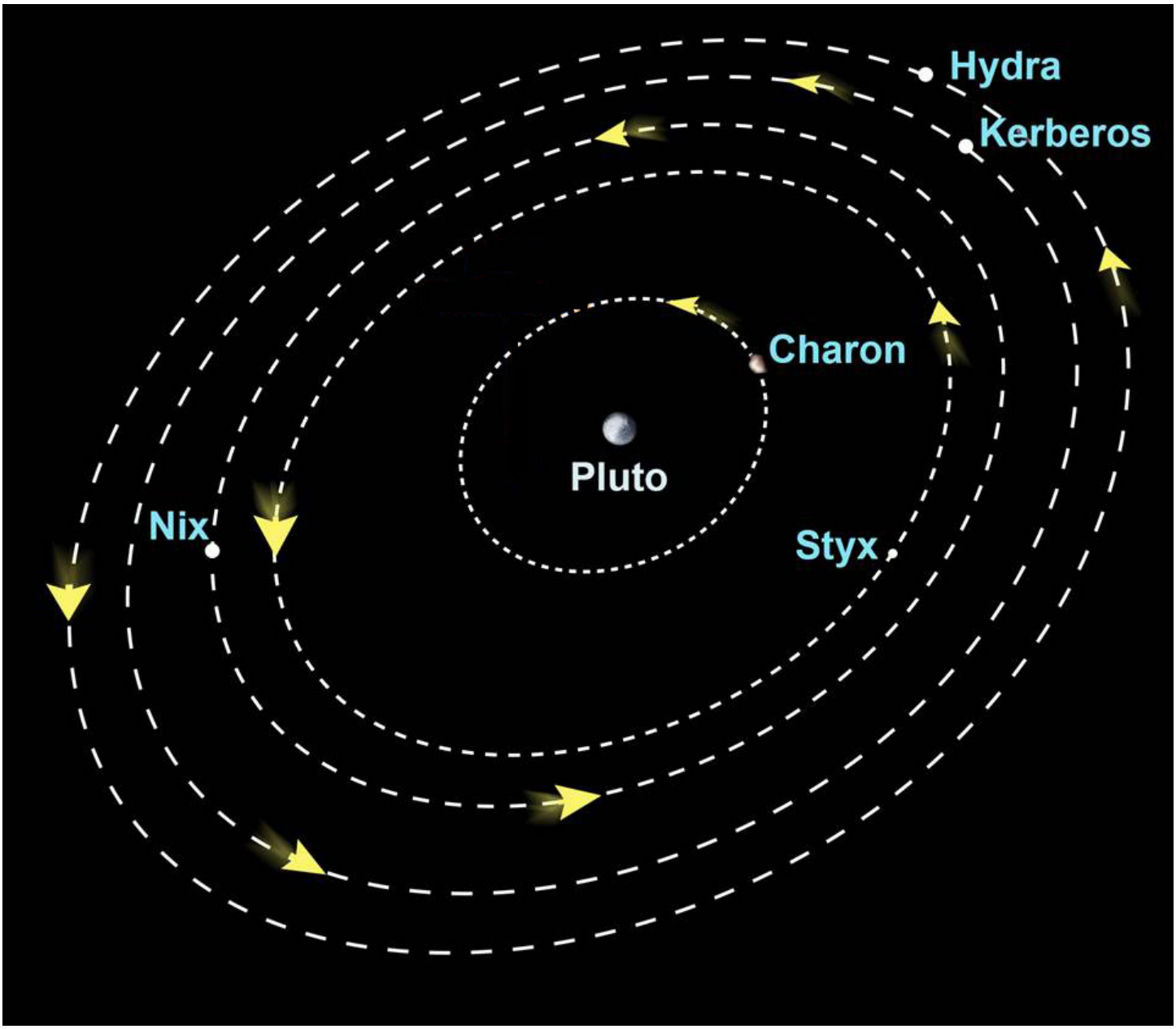


The Pluto system, with (not to scale) orbits of Pluto's five known moons.

# Why Pluto and the Kuiper Belt?

## *The Science of New Horizons*

Since the day it was discovered 85 years ago, Pluto has been a harbinger of the mysteries on the far planetary frontier. With its discovery in 1930, Pluto became a preview of the icy, rocky objects in what would become known as the Kuiper Belt. And as history has already told us, it was just the first glimpse of other incredible scientific finds.

In the early 2000s, owing to the great scientific interest in Pluto as well as in the ancient, icy Kuiper Belt of miniature planets, smaller worlds and comets, the U.S. National Academy of Sciences ranked a Pluto-Kuiper Belt mission its highest priority for a New Frontiers mission start in that decade. New Horizons is that mission.

### The Third Zone

The discovery of the Kuiper Belt in the last quarter-century sparked a fundamental change — a revolution, really — in how we view the solar system. This new "third zone" swirling beyond both the inner zone of rocky planets (Mercury, Venus, Earth and Mars) and the middle zone of the gas giants (Jupiter, Saturn, Uranus and Neptune), turns out to be largest structure in our planetary system — holding an estimated 100,000-plus miniature worlds with diameters larger than 100 kilometers — and it is the source of short-period comets. It is also home to a handful of small planets, of which Pluto is the largest, brightest and first discovered.

### A New Kind of Dwarf Planet

For decades after young American astronomer Clyde Tombaugh discovered Pluto in 1930, this small world was considered an oddball. The other planets fit neatly into the known architecture of the solar system — four small, rocky bodies in the inner orbits and four gas giants in the outer orbits, with an asteroid belt in between. Distant Pluto was an icy stranger in a weird orbit.

By the 1950s, some researchers, most notably Dutch-American astronomer Gerard Kuiper, had suggested that Pluto was not a lone oddity but the brightest of a vast collection of objects orbiting beyond Neptune. This concept, which became known as the Kuiper Belt, appeared in scientific literature for decades, but repeated searches for this population of frosty comets came up short.

In the late 1980s, scientists determined that only something like the Kuiper Belt could explain why short-period comets orbit so close to the plane of the solar system. This circumstantial evidence for a distant belt of bodies in the same region as Pluto drove observers back to their telescopes in search of undiscovered, faint objects. This time, though, they had technology on their side: telescopes with CCD cameras made searches far more sensitive than work done previously with photographic plates.

In 1992, astronomers at the Mauna Kea Observatory in Hawaii discovered the first Kuiper Belt Object (KBO), which was about 20 times smaller and almost 10,000 times fainter than Pluto. Since then, observers have found more than 1,000 KBOs, with diameters ranging from 50 to almost 2,400 kilometers (30 to 1,240 miles) — and researchers estimate that the Kuiper Belt contains more than 100,000 objects larger than 100 kilometers (about 60 miles) across. In essence, the Kuiper Belt has turned out to be the big brother of the asteroid belt, with more mass, more objects, and a greater supply of ancient, icy and organic material left over from the birth of the planets than imagined.

The Kuiper Belt's discovery made it clear that Pluto is not an anomalous body, but one of a new class of bodies orbiting 5 billion kilometers (3 billion miles) — and beyond — from the Sun. Because this far-off region may hold important clues to the early development of the solar system, planetary scientists are very interested in learning more about Pluto and its moons and their Kuiper Belt cousins.

The region is too far to observe from Earth in any detail; even the Hubble Space Telescope shows only blurry patches of light and dark materials on Pluto's surface. And although the Pioneer, Voyager and Galileo spacecraft provided scientists with marvelous up-close images and other data to reveal Jupiter, Saturn, Uranus and Neptune, no space probe has ever visited Pluto or observed objects in the Kuiper Belt — until now.

## Astronomical Archeology

Exploring the Kuiper Belt is an archeological dig into the earliest days of the solar system — a close-up look at the remnants of the ancient planet-building process that hold critical clues to the history of the outer solar system, objects whose pristine chemistry has been held in 'deep freeze' that acts like a time capsule. Scientists are using New Horizons to explore the region, so getting a valuable first glimpse of the long-gone era of planetary formation.

Why are astronomers so interested in studying Pluto and the Kuiper Belt? For one, the size, shape and general nature of the Kuiper Belt appear to be much like belts seen around other nearby stars. Additionally, when researchers used computer-modeling techniques to simulate the formation of KBOs as the solar system was coalescing from a whirling disk of gas and dust, they found that the ancient Kuiper Belt may have been at least 10 times more massive than it is today to give rise to Pluto-Charon and the KBOs we see. In fact, there may once have been enough solid material to have formed another planet the size of Uranus or Neptune in the Kuiper Belt. And the same simulations revealed that large planets would have naturally grown from the KBOs in a very short time had nothing disturbed the region.

But something disrupted the Kuiper Belt at about the time Pluto formed. Was it Neptune's formation near the belt's inner boundary? Perhaps instead it was the gravitational influence of a large number of planetary embryos — rocky bodies thousands of kilometers across — moving rapidly through the Kuiper Belt after they were ejected by Uranus and Neptune from their own formation zones. Or maybe it was something else altogether. Whatever the cause, the Kuiper Belt apparently lost most of its mass, and the growth of bodies in the region suddenly stopped.

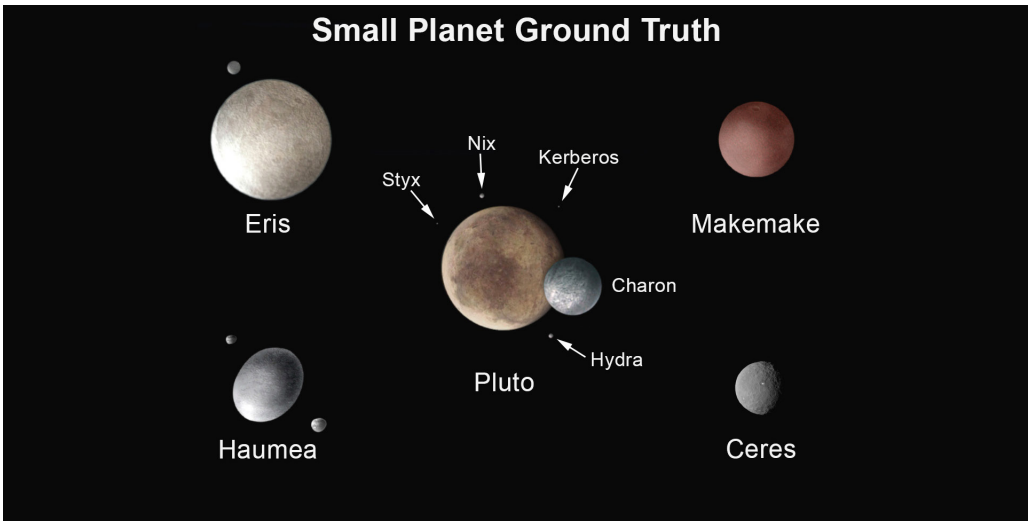


New Horizons is humankind's first opportunity to explore an entirely new class of worlds — the small planets. Pluto is largest and best known, but there are others — including Ceres, the target of NASA's Dawn mission in 2015.

## Why Study the Pluto System?

**Pluto is a new type of planet.** Neither a terrestrial planet nor a gas giant, it is an ice dwarf, common to the deep outer solar system. Studying Pluto will shed light on the other small planets of the Kuiper Belt.

**Pluto-Charon is the solar system's only known binary planet**, with implications for atmospheric transfer and for better understanding of how the Earth-Moon system formed.

**Pluto's atmosphere provides the only chance to observe planetary hydrodynamic escape**, the process believed to have shaped Earth's primordial atmospheric loss.

**Pluto's and Charon's surfaces tell the history of outer solar system bombardment**. Comparing Pluto's cratering record with Charon's should yield a direct comparison of present-day and historical impacts. Because of continual sublimation and condensation of frost, Pluto's surface is considered "young" while Charon's, because of the apparent lack of atmosphere, is "old."

## Pluto System Science Highlights

**1930:** Pluto discovered

**1954:** Pluto's 6.4 day rotation period discovered

**1965:** Pluto's 3:2 orbit resonance with Neptune discovered

**1976:** Discovery of methane ice on Pluto

**1978:** Charon discovered; mass of Pluto-Charon determined

**1980:** Stellar occultation — observing a star as a planet passes in front of it — reveals Charon's diameter to be near 1,200 kilometers (about 750 miles)

**1985:** First direct detection of Charon by transits across Pluto's disk; telescopic evidence of polar caps

**1986:** First reliable radii for Pluto and Charon determined

**1987:** Water-ice discovered on Charon's surface

**1988:** Discovery that Pluto's orbit is chaotic; stellar occultation reveals Pluto's atmosphere

**1992:** Nitrogen and carbon monoxide ices found on Pluto

**2005:** Nix and Hydra discovered

**2006:** NASA's New Horizons spacecraft launched, ammonium hydrates discovered on Charon

**2011:** Kerberos discovered

**2012:** Styx discovered

**2015:** New Horizons arrives at Pluto

## Uncovering the Kuiper Belt

The first Kuiper Belt Object was discovered in 1992: a 100-kilometer (60-mile) sized object in a near-circular orbit well beyond Pluto. Astronomers found four more in 1993 and 10 more the following year. Today there are more than 1,000 detected objects in the Kuiper Belt. Most are very small compared to Pluto.

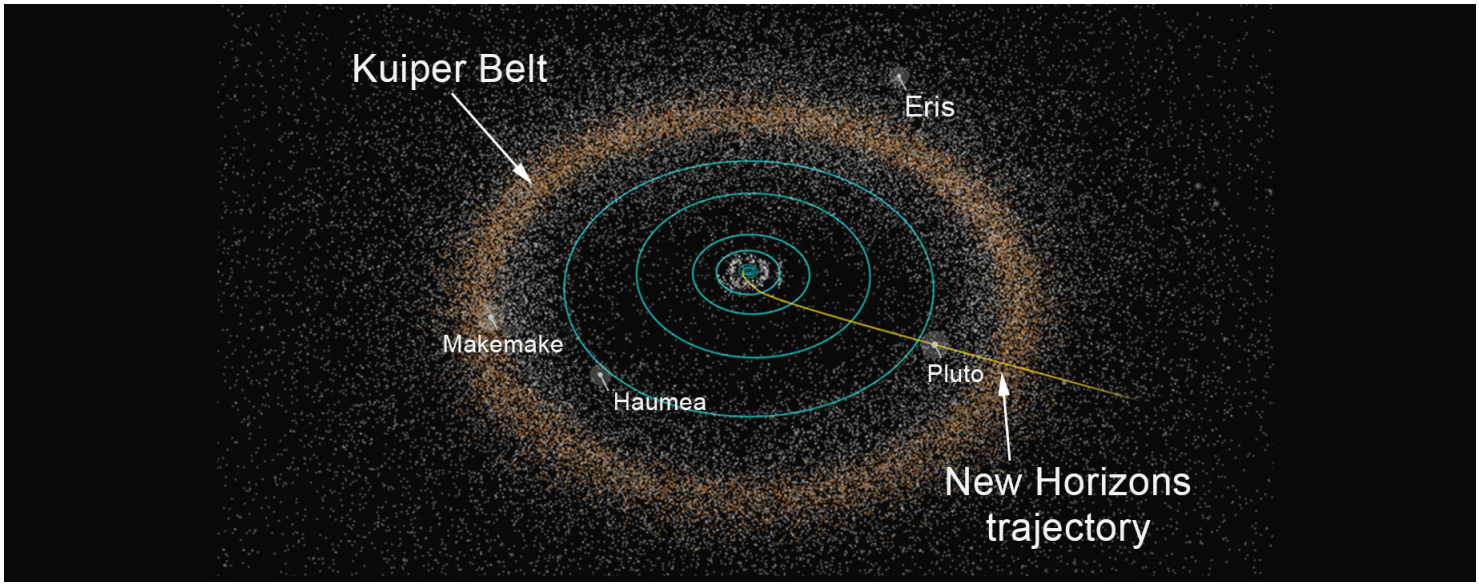


Larger Kuiper Belt Objects shown in relation to Pluto's location and New Horizons' path through the solar system.

## A Scientific Priority

What little we do know about the Pluto system tells us it's a scientific wonderland. Pluto's large, Texas-sized moon Charon has a diameter of about 1,200 kilometers (750 miles), more than half that of Pluto's size, making it the largest moon in the solar system compared to the planet it orbits. (In contrast, most satellites are only a few percent of their parent object's diameter.) Because the two bodies are so close in size, and because they orbit about a center of mass that is outside Pluto's surface (known as a barycenter), Pluto-Charon is considered a double planet. No other planet in our solar system falls into this category — although the Earth-moon system comes close — but astronomers have discovered many double asteroids and double KBOs. There is now little doubt that binary objects like Pluto-Charon are common in our solar system, and most likely in others. New Horizons is the first trip to a binary world.

Astronomers are eager to know how a system like Pluto and its moons could form. The prevailing theory: Pluto collided with another large body in the distant past, and much of the debris from this impact went into orbit around Pluto and eventually coalesced to form Charon. Because scientists believe that a similar collision led to the creation of Earth's moon, the study of Pluto and Charon could help scientists decipher the history of our own planet.

Researchers also want to understand why Pluto and Charon look so different. From Earth, the Hubble Space Telescope and New Horizons, we have seen that Pluto has a reflective surface with distinct markings that indicate polar caps. Charon's surface is far less reflective, with indistinct markings. And where Pluto has an atmosphere, Charon apparently does not. Is the sharp dichotomy between these two neighboring worlds a result of divergent evolution, perhaps owing to their different sizes and compositions. Or is it a consequence of how they originally formed? New Horizons will begin to answer these questions.

Pluto's density, size and surface composition are strikingly similar to those of Neptune's largest satellite, Triton — itself a captured planet from the Kuiper Belt. A great surprise of Voyager 2's exploration of the Neptune system was the discovery of ongoing cryovolcanic activity on Triton. Will Pluto or other KBOs display such activity? New Horizons will provide insight that guides us to a better understanding of these small worlds.

Yet another allure of Pluto is its fascinating and surprisingly complex atmosphere. Although Pluto's atmosphere is about 300-600 times less dense than Mars' — which is, in turn, about 150 times less dense than Earth's — it offers unique insights into the workings of related planetary atmospheres at Triton and Titan. Whereas the Earth's atmosphere contains only one gas (water vapor), and Mars contains two (water vapor and carbon dioxide), that regularly transitions between solid and gas, Pluto's atmosphere contains three: nitrogen, carbon monoxide and methane.

### 2015: The Year of the Dwarf Planet

NASA's Dawn spacecraft arrived at dwarf planet Ceres in April 2015. Data from Dawn and New Horizons gathered this year will teach us much about the least-explored class of planet in our solar system.

Furthermore, Pluto's surface temperature varies greatly because of the planet's eccentric orbit and polar tilt. Pluto reached its closest approach to the Sun in 1989. As the planet moves farther away and cools, most astronomers think the average surface temperature will eventually drop and most of the atmosphere will freeze out on the surface. As a result of this, and because the planet is essentially tipped on its side, with its rotational north pole 28 degrees below the ecliptic plane, Pluto may have the most complex seasonal patterns in the solar system.

What's more, scientists believe Pluto's atmosphere bleeds into space — a lot. The thermal energy of typical molecules in the upper atmosphere is sufficient to escape Pluto's gravity, a process called hydrodynamic escape. Although we do not see hydrodynamic escape on any other planet today, it may have been responsible for the rapid loss of hydrogen from Earth's atmosphere early in our planet's history. In this way, hydrodynamic escape may have helped make Earth suitable for life. Pluto is the only place in the solar system where we can study this process on a planetary scale today.

Another important connection between Pluto and life on Earth is the likely presence of organic compounds (such as frozen methane) on Pluto's surface and water ice inside the dwarf planet. Recent observations of smaller KBOs show that they, too, most likely harbor large amounts of ice and organics. Such objects are thought to have routinely strayed into the inner part of the solar system billions of years ago, collided with Earth, and helped to seed the young Earth with the raw materials of life.

Given all these fascinating scientific motivations, it is easy to understand why the planetary research community wanted to send a spacecraft to Pluto and the Kuiper Belt.

## Core Science

New Horizons' core science goals reflect what the science community has wanted to learn about Pluto for nearly three decades. The craft will map the surfaces of Pluto and Charon with an average pixel scale of one kilometer (Hubble Space Telescope's best Pluto and Charon is about 500 kilometers). It will map the surface composition across the various geological provinces of the two bodies. And it will determine the composition, structure and escape rate of Pluto's atmosphere. NASA has also outlined a list of lower priorities, including the measurement of surface temperatures, topographic mapping, and the search for additional satellites or rings around Pluto.

New Horizons began its study of the Pluto system in January 2015, six months before closest approach. In late April 2015, when the craft was less than 100 million kilometers (65 million miles) from Pluto, its images of the planet began to exceed what we could take with the best telescopes on or around Earth.

In the weeks leading up to closest approach, the mission team will begin to map Pluto and Charon in increasing detail and observe phenomena such as Pluto's weather by comparing images of the planet over time. It will take high-resolution views of Pluto and its moons to decide which geological features receive top-priority focus. The highest-resolution images will be 70 meters per pixel.

During close approach — the closest point coming 12,500 kilometers (about 7,750 miles) from Pluto's surface — New Horizons' imagers will map the entire surface structure of the sunlit faces of Pluto and Charon and also map the surface compositions.

Once the spacecraft passes Pluto, it will turn around and try to map the planet's night side, which will be softly illuminated by the moonlight from Charon. Also at this time, the spacecraft's antenna will receive a powerful radio beam from Earth, aimed so that it passes through Pluto's atmosphere. By measuring the effects of atmospheric refraction on the radio beam as it travels to the spacecraft, and similar effects on ultraviolet sunlight passing through the atmosphere, scientists will be able to map the temperature, density and composition profile of the atmosphere all the way to the surface.

## Science Objectives

Based largely on what the scientific community wanted to learn about Pluto and Charon, NASA prioritized its science goals for Pluto system exploration in three categories:

**Required**

- Characterize the global geology and morphology of Pluto and its moons
- Map surface composition of Pluto and Charon
- Characterize the neutral atmosphere of Pluto and its escape rate

**Important**

- Characterize the time variability of Pluto's surface and atmosphere
- Image Pluto and Charon in stereo
- Map the terminators (day/night boundary) and compositions of selected areas of Pluto and Charon in high resolution
- Characterize Pluto's ionosphere and solar wind interaction
- Search for atmospheric hydrocarbons and nitriles
- Search for an atmosphere around Charon
- Determine albedos and surface temperatures on Pluto and Charon

**Desired**

- Characterize the energetic particle environment of Pluto and Charon
- Refine bulk parameters (radii, masses, densities) and orbits of Pluto and Charon
- Search for additional satellites, rings and magnetic fields

NASA defines mission success as meeting the "required" objectives. With its full science payload — three optical instruments, two plasma instruments, two radio science receivers/radiometers and a dust sensor — New Horizons plans to exceed these requirements, meeting or exceeding all of the objectives in each category.

New Horizons will also sample the density and composition of material escaping from Pluto's atmosphere, map surface temperatures across Pluto and Charon, search for Pluto's ionosphere, refine the diameters and masses of Pluto and its moons, search for dust particles in the Pluto system, and search for rings and additional moons — among other studies.

The first exploration of the Pluto system and, potentially, other objects in the Kuiper Belt is already inspiring and exciting the scientific community and the public. New Horizons will provide valuable insights into the origin of the outer solar system; the origin and evolution of planet—satellite systems likely formed by giant impacts; and the comparative geology, geochemistry, tidal evolution, atmospheres and volatile transport mechanics of icy worlds.

For more information on what we know about the Pluto system, visit the New Horizons websites at www.nasa.gov/newhorizons and http://pluto.jhuapl.edu.

# New Horizons Science Team

**Principal Investigator:** Alan Stern, Southwest Research Institute

**Project Scientist:** Hal Weaver, Johns Hopkins Applied Physics Laboratory

**Deputy Project Scientists:** Kimberly Ennico, NASA Ames Research Center; Cathy Olkin, Southwest Research Institute; Leslie Young, Southwest Research Institute

**Co-Investigators**

Fran Bagenal, University of Colorado
Richard Binzel, Massachusetts Institute of Technology
Marc Buie, Southwest Research Institute
Bonnie Buratti, NASA Jet Propulsion Laboratory
Andy Cheng, Johns Hopkins Applied Physics Laboratory
Dale Cruikshank, NASA Ames Research Center
Heather Elliott, Southwest Research Institute
Kimberly Ennico, NASA Ames Research Center
Randy Gladstone, Southwest Research Institute
Will Grundy, Lowell Observatory
Matt Hill, Johns Hopkins Applied Physics Laboratory
Dave Hinson, SETI Institute
Mihaly Horanyi, University of Colorado
Don Jennings, NASA Goddard Space Flight Center
Ivan Linscott, Stanford University
Jeff Moore, NASA Ames Research Center
Dave McComas, Southwest Research Institute
William McKinnon, Washington University in St. Louis
Ralph McNutt, Johns Hopkins Applied Physics Laboratory
Cathy Olkin, Southwest Research Institute
Joel Parker, Southwest Research Institute
Harold Reitsema, independent consultant
Dennis Reuter, NASA Goddard Space Flight Center
Paul Schenk, Lunar and Planetary Institute
John Spencer, Southwest Research Institute
Darrell Strobel, Johns Hopkins University
Mark Showalter, SETI Institute
Mike Summers, George Mason University
Len Tyler, Stanford University
Hal Weaver, Johns Hopkins Applied Physics Laboratory
Leslie Young, Southwest Research Institute

**Pluto Encounter Planning (PEP):** Leslie Young (deputies: Cathy Olkin, John Spencer)

**Geology and Geophysics Investigation (GGI) Theme Team Lead:** Jeff Moore (deputies: John Spencer, William McKinnon)

**Composition (COMP) Theme Team Lead:** Will Grundy (deputy: Dale Cruikshank)

**Atmospheres (ATM) Theme Team Lead:** Randy Gladstone (deputy: Mike Summers)

**Particles and Plasma (P&P) Theme Team Lead:** Fran Bagenal

**Director of the Office of the Principal Investigator (DOPI):** Cathy Olkin

# Mission Overview

New Horizons will help us understand worlds at the edge of our solar system by making the first reconnaissance of Pluto and its system of moons — the last of the classical planets, and the first objects in the Kuiper Belt to be visited by spacecraft.

Packed with robust electronics and a full suite of the most powerful science instruments ever sent on a first reconnaissance planetary mission, the compact New Horizons probe is fortified for its long voyage of discovery. Launched on a powerful Atlas V rocket, New Horizons was the fastest spacecraft ever dispatched to the outer solar system, passing lunar orbit distance nine hours after launch and reaching Jupiter for a gravity assist and scientific studies just 13 months later. In January 2015, it began a six-month-long flyby study of the Pluto system. Then, should NASA approve, New Horizons will fly deeper into the Kuiper Belt to study a much smaller icy world — a planetesimal — in the vast region that begins a billion miles beyond Neptune's orbit.

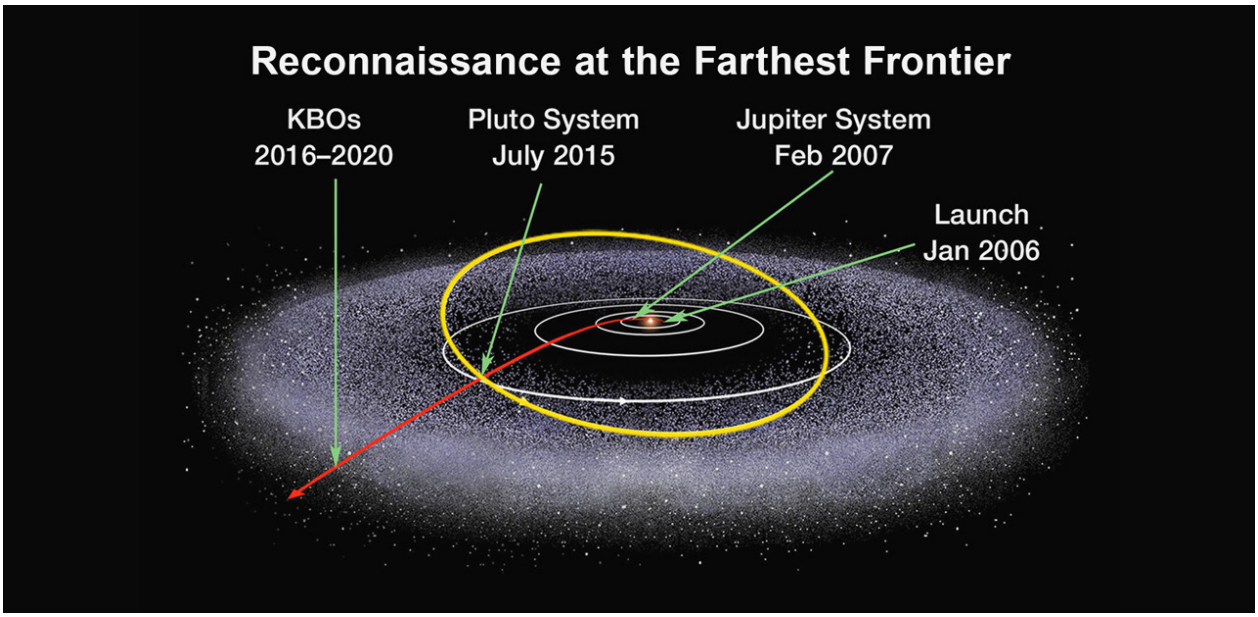


The New Horizons path through the solar system.

## Launch

New Horizons lifted off from Launch Complex 41 at Cape Canaveral Air Force Station, Florida, on a Lockheed Martin Atlas V-551 launch vehicle on January 19, 2006. The Atlas V lifted off with 2,451,810 pounds (10,906,194 newtons) of force. (A newton is the unit of force needed to accelerate one kilogram of mass to one meter per second in one second.)

After it separated from its third stage, a STAR-48 solid-fuel booster, New Horizons sped from Earth at about 16 kilometers per second, or 36,000 miles per hour — the fastest spacecraft ever launched. New Horizons reached lunar orbit distance (about 384,000 kilometers or 238,600 miles from Earth) approximately nine hours after launch — the Apollo missions to the moon took about three days — and reached the Jupiter system in 13 months. During the 13 months en route to Jupiter, New Horizons conducted system and instrument checkouts, instrument calibrations, trajectory correction maneuvers, and rehearsals for the Jupiter science encounter.

## Jupiter Gravity Assist

Launching in January 2006 allowed New Horizons to take advantage of a Jupiter gravity assist that shaved 3.7 years off the travel time to Pluto. Zooming past Jupiter on Feb. 28, 2007, New Horizons gained nearly 14,000 kilometers (9,000 miles) per hour from Jupiter's gravity, accelerating to a speed of over 83,600 km/h (52,000 mph) away from the Sun.

The Jupiter flyby also presented New Horizons with a unique opportunity to flight-test its instruments and pointing capabilities on an exciting set of scientific targets — Jupiter and its moons. New Horizons was the eighth spacecraft to visit Jupiter — but a combination of trajectory, timing and technology allowed it to explore details no probe had seen before, such as lightning near the planet's poles, the life cycle of fresh ammonia clouds, boulder-size clumps speeding through the planet's faint rings, the structure inside volcanic eruptions on its moon Io, and the path of charged particles traversing the previously unexplored length of the planet's long magnetic tail. New Horizons added to the legacy of Jupiter exploration begun with Pioneer and continued with Voyager, Galileo, Cassini and Juno, by publishing more than 100 scientific papers resulting from its flyby.

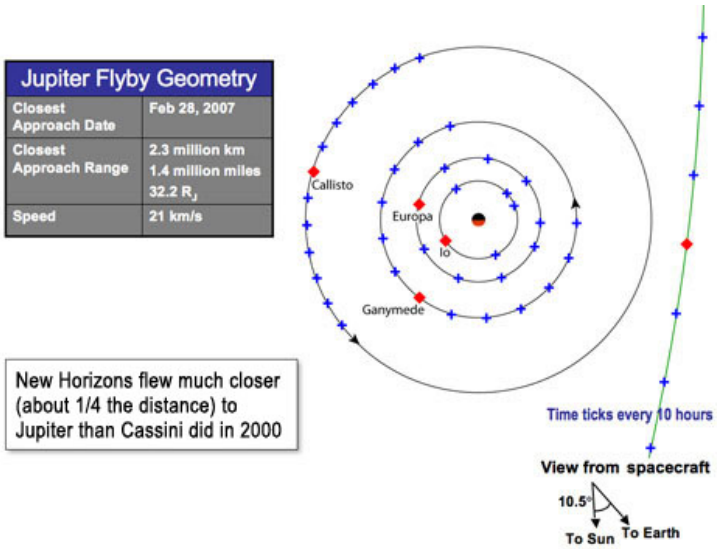

Read more about the Jupiter encounter at:
http://pluto.jhuapl.edu/Mission/The-Path-to-Pluto/Jupiter-Encounter.php

From January through June of that year, New Horizons' seven science instruments made more than 700 separate observations of the Jovian system, with most of them coming in the eight days around closest approach to Jupiter.

## Hibernation

New Horizons "slept" for most of the cruise between Jupiter and Pluto in spin-stabilized hibernation mode. New Horizons spent 1,873 days in hibernation — about two-thirds of its flight time — spread over 18 separate hibernation periods from mid-2007 to late 2014 that ranged from 36 days to 202 days long. The last ended on Dec 6, 2014, when the team "woke" New Horizons to begin Pluto-encounter operations.

During hibernation, much of the New Horizons spacecraft was unpowered. The onboard flight computer monitored system health and broadcast a weekly beacon-status tone back to Earth. Onboard sequences sent in advance by mission controllers woke New Horizons two or three times each year to check out critical systems, calibrate instruments, gather science data, rehearse Pluto-encounter activities, and perform course corrections.

New Horizons pioneered routine cruise-flight hibernation for NASA. Not only did hibernation reduce wear and tear on the spacecraft's electronics, it also lowered operations costs and freed up NASA's Deep Space Network tracking and communication resources for other missions.

## How Do You Get to Pluto? Practice, Practice, Practice

New Horizons team members view the Pluto flyby as the Super Bowl of space science — and you don't walk into the big game without practicing hard. In July 2013, the mission team converged on the Johns Hopkins Applied Physics Laboratory (APL) for a test of both team and spacecraft that replicated the closest nine days of flight toward and past Pluto — almost exactly as it will happen in July 2015.

Operators programmed New Horizons' onboard computers to "think" the spacecraft was approaching and passing Pluto, to the point it executed each command and movement of the actual encounter. Gathered at APL's campus in Laurel, Maryland, mission navigation and operations teams guided spacecraft activity in real time; the science team examined simulated data in the same way they'll download, analyze and distribute the real stuff when Pluto and its moons slowly reveal their secrets to New Horizons' seven science instruments.

The team and spacecraft accomplished everything they set out to do, and then some. Watch them gear up for this historic encounter on the planetary frontier in the two-part video found at: http://pluto.jhuapl.edu/News-Center/News-Article.php?page=20131223

## Wake Up, New Horizons!

New Horizons joined the astronauts on four space shuttle missions who "woke up" to English tenor Russell Watson's inspirational "Where My Heart Will Take Me" — in fact, Watson himself recorded a special greeting and version of the song to honor New Horizons. The song was played in New Horizons mission operations upon confirmation of the spacecraft's final wake-up on Dec. 6 — listen to it at http://pluto.jhuapl.edu/News-Center/News-Article.php?page=20141206.

## Approaching Pluto

After traveling some 5 billion kilometers (3 billion miles) and 9.5 years, New Horizons must thread a celestial needle by flying through a target circle only 300 kilometers (about 200 miles) in diameter — and with less than 100 seconds in timing error — to accomplish its science objectives. Fortunately, the team had a chance to guide New Horizons along the way.

Since January 2015, the team has been taking detailed pictures of the Pluto system to help it refine the spacecraft's targeting and timing to reach the Pluto aim point. (This is called "optical navigation.")

The cameras and plasma and particle instruments on New Horizons actually started making measurements of the Pluto system in January 2015. Pluto and Charon first appeared as small, bright dots to New Horizons' cameras. But they and Pluto's smaller moons have appeared larger as the distance to encounter has decreased.

Pluto and Charon each rotate once every 6.4 Earth days. For the last four Pluto days before encounter (26 Earth days, or beginning around mid-June), the team will compile maps and gather spectra of Pluto and Charon every half-day. The team can then compare these maps to track changes over a Pluto day, at scales as small as about 30 miles (48 kilometers), which might indicate new snows or other weather.

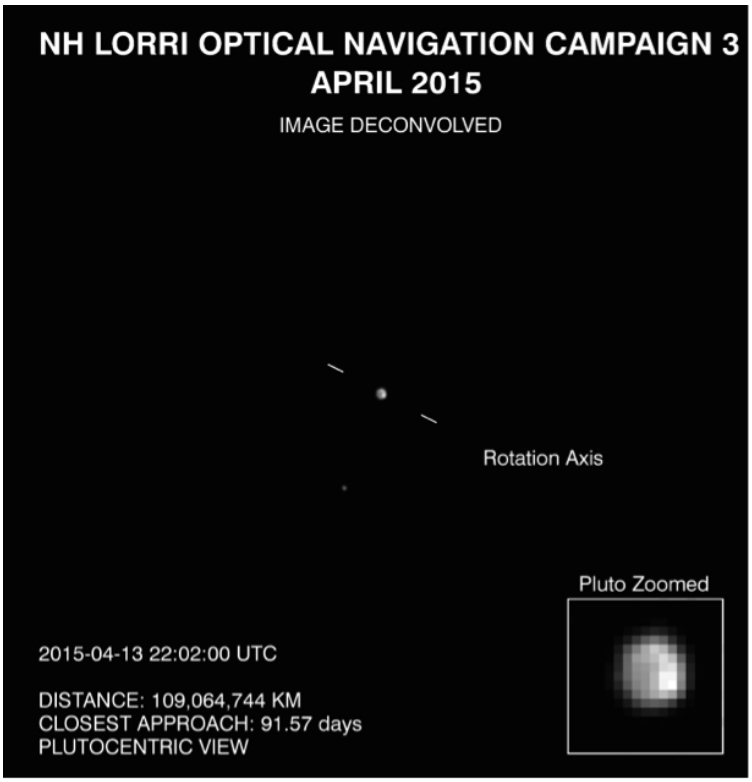


Through the lenses of its telescopic Long Range Reconnaissance Imager, New Horizons "saw" surface features on Pluto — including what scientists think is a polar cap — for the first time in April 2015.

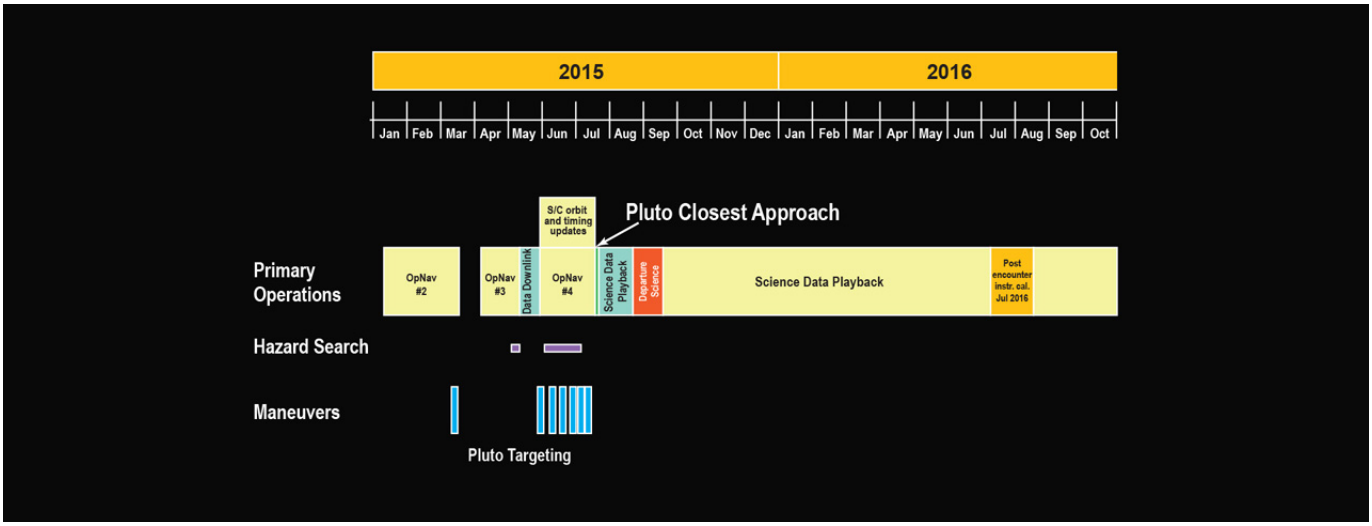


The Pluto encounter timeline. Find the latest encounter and observation plans online at http://pluto.jhuapl.edu.

## Hazard Watch

It seemed that whenever the New Horizons team used the Hubble Space Telescope to look harder at the Pluto system, it found additional moons: Nix and Hydra in 2005, Kerberos in 2011 and Styx in 2012.

The new moons made for attractive science targets, but they also raised serious concerns among the mission team. Objects smacking into Pluto and Charon might cause craters and debris, and on those larger bodies that debris likely falls back to the surface. Strikes on the smaller moons — because they have such low mass and gravity — could send debris into orbit around Pluto. And even tiny particles — no bigger than a grain of rice — can be lethal to a spacecraft blazing along at 30,000 miles per hour.

In 2011, the mission appointed a hazard-analysis team of scientists and engineers to examine this issue. They took spare parts left from the spacecraft build and re-tested them to check their hardness against impacts, and they designed models of expected dust behavior in the Pluto system. As the models gained more fidelity and more components were tested on Earth, those concerns began to ease. Estimates and models put the risk of a catastrophic strike at less than one percent.

Still, the team took precautions, which were especially important if New Horizons spotted new objects in the Pluto system. From mid-May to late June, the team embarked on an intense seven-week search for smaller satellites, larger dust and debris fields, and rings, using the telescopic LORRI (Long Range Reconnaissance Imager) instrument on the spacecraft. Should such hazards have blocked New Horizons' ideal path, the team could have shifted to one of three potential "Safe Haven by Other Trajectory" (SHBOT) plans to take the spacecraft out of harm's way. Operators could have also turned New Horizons so its dish antenna faced forward — in position to "ram" any debris in its path — to protect the instruments and spacecraft body underneath. Each SHBOT scenario cut the science return to varying degrees — some significantly — but those scenarios could have improved the chances of spacecraft survival and the successful downlink of science data. The team referred to the process to identify hazards and assess their danger — including decision-making to change the trajectory of New Horizons or the encounter sequence to protect against discovered hazards — as "seven weeks of suspense."

On July 1, the New Horizons team announced that the spacecraft would remain on its optimal path through the Pluto system instead of making a late course correction to detour around any hazards. Not finding new moons or rings present was a bit of a scientific surprise, but, as a result, no engine burn was needed to steer clear of potential hazards.

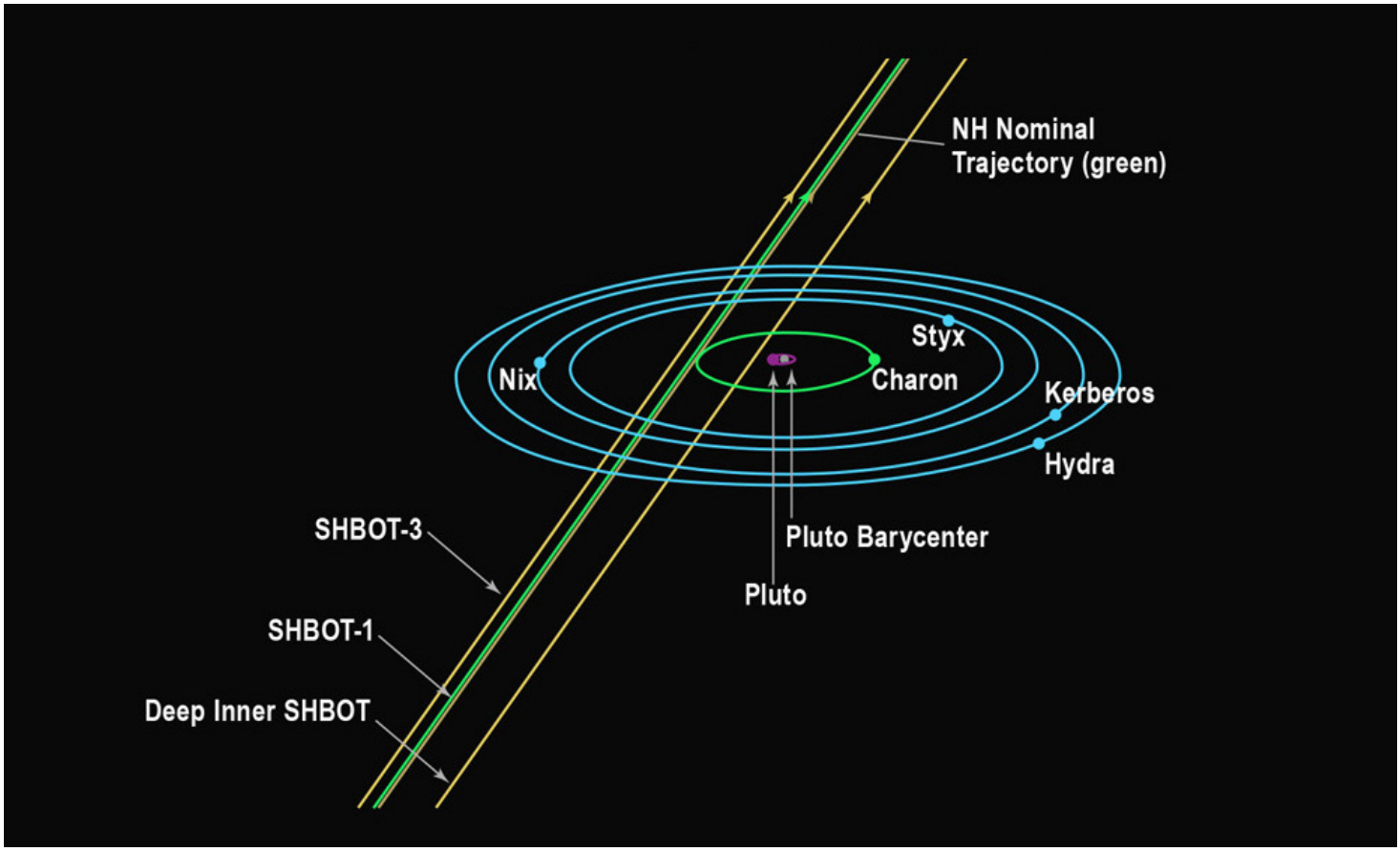


New Horizons Safe Haven by Other Trajectory (SHBOT) options.

**Contingency Samples:** The Apollo 11 astronauts quickly picked up "contingency samples" on their first visit to the moon, just in case something went wrong and Neil Armstrong had to quickly return to the lunar module. New Horizons has a similar plan to send home some of the best data stored on its recorders in the two days before it flies through the heart of the Pluto system, just in case hazards harm the spacecraft during close approach.

## The Encounter

All told, New Horizons has approximately 30 specific scientific objectives planned for Pluto and its moons — from surface mapping and composition mapping to atmospheric studies and searches for new moons and rings. And in just the central nine days around closest approach — what the team has termed the "core encounter" — more than 380 observations are planned of Pluto, its moons, and the space between and around this system.

The busiest part of the Pluto system flyby will last one full Earth day, from about 12 hours before closest approach to about 12 hours after. On approach, the spacecraft will study ultraviolet emissions from Pluto's atmosphere and make its best global maps of Pluto and Charon in blue, red, infrared, and a special wavelength that is sensitive to methane frost on the surface. It will also take spectral maps in the near infrared, telling the science team about Pluto's and Charon's surface compositions at all locations, as well as the variation in temperature across the surface. New Horizons will sample material coming from Pluto's atmosphere, and will image all of Pluto's moons during this period.

At closest approach, the spacecraft comes 12,500 kilometers (about 7,750 miles) from Pluto and approximately 29,000 kilometers (about 18,000 miles) from Charon. During the half-hour when the spacecraft is closest to Pluto and Charon, it will take close-up pictures at both visible and near-infrared wavelengths. The best pictures of Pluto will depict surface features as small about 70 meters (about 230 feet) across — about the size of a football field. The spacecraft will also obtain stereo mapping products the team will use to reconstruct the topography of Pluto.

Even after the spacecraft passes Pluto, Charon and their four smaller companion moons, its work is far from done. Looking back at the mostly dark side of Pluto or Charon is the best way to spot haze in the atmosphere, to look for rings, and to

determine whether their surfaces are smooth or rough. Also, the spacecraft will fly through the shadows cast by Pluto and Charon and observe both the Earth and Sun setting, and then rising, through Pluto's atmosphere. It will watch the light from the Sun and pick up radio waves from transmitters on Earth, making measurements that will reveal the composition, structure, and thermal profile of Pluto's atmosphere in exquisite detail. The spacecraft will also obtain images of Pluto's night side, illuminated by Charon, which casts about as much light onto Pluto as a quarter moon on Earth.

Similar measurements were made by spacecraft like the Voyagers and the Mariners on first flybys of planets. However, New Horizons also brings some revolutionary new capabilities to bear — such as temperature and composition mapping capabilities and a dust detector to detect tiny debris particles near Pluto. These kinds of instruments were not available when the Mariner and Voyager spacecraft were flown.

New Horizons will approach Pluto from the planet's northern hemisphere, which will be sunlit; the southern pole will be dark. The spacecraft flies toward Pluto at a solar phase angle of 15 degrees — excellent lighting conditions for imaging.

In July 2015, Pluto will be just under 3 billion miles (about 5 billion kilometers) from Earth — about 32 times the distance between the Sun and Earth. The one-way light time delay — the time for a radio signal to reach New Horizons from Earth — at that distance is 4 hours and 25 minutes. Timing has to be precise: the team must transmit the signals used for probing the atmosphere with the Radio Science Experiment (REX) 4 hours and 25 minutes before the anticipated Earth occultation time.

The entire encounter sequence has been intricately choreographed and will be precisely programmed in New Horizons' redundant flight computers. In fact, mission operators will not have continuous contact with New Horizons during the flyby since the spacecraft will be continuously reorienting itself to collect data on Pluto and its moons. New Horizons was designed to collect as much data as possible, as quickly as possible, and then store that data on its solid-state digital recorders.

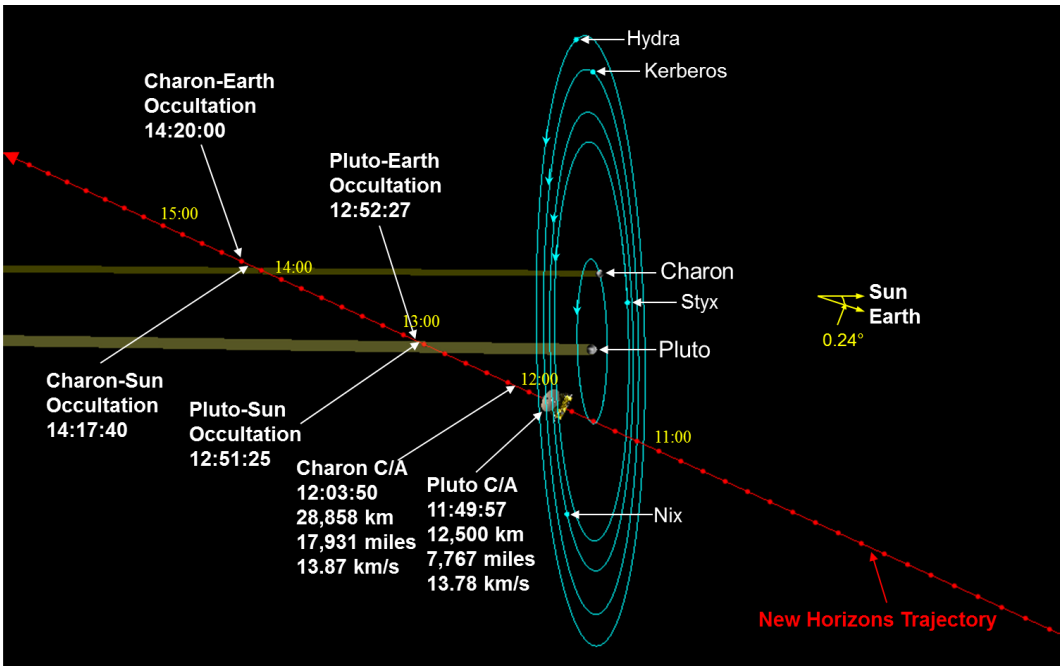


New Horizons trajectory through the Pluto system. Times are UTC; timeline "ticks" are 10 minutes. Distances are from the surfaces of Pluto and Charon; flyby speeds are relative to each body; position and lighting of each body is at the time of Pluto close approach.

## Long Distance Data

A major challenge for the New Horizons mission is the relatively slow "downlink" rate at which data can be transmitted to Earth, especially when you compare it to rates now common for high-speed Internet surfers.

During the Jupiter flyby in February 2007, New Horizons sent data home at about 38 kilobits per second (kbps). The average downlink rate after New Horizons passes Pluto (and sends the bulk of its encounter data back to Earth) is approximately 2 kilobits per second, a rate the spacecraft achieves by downlinking with both of its transmitters through NASA's largest antennas. Even then, it will take until late 2016 to bring down all the encounter data stored on the spacecraft's recorders.

Since New Horizons must share time on NASA's Deep Space Network with other missions, the team plans to produce a compressed, "browse" data set that can be sent to Earth more quickly. The browse data will be downlinked before the end of 2015, followed by the complete dataset by late 2016.

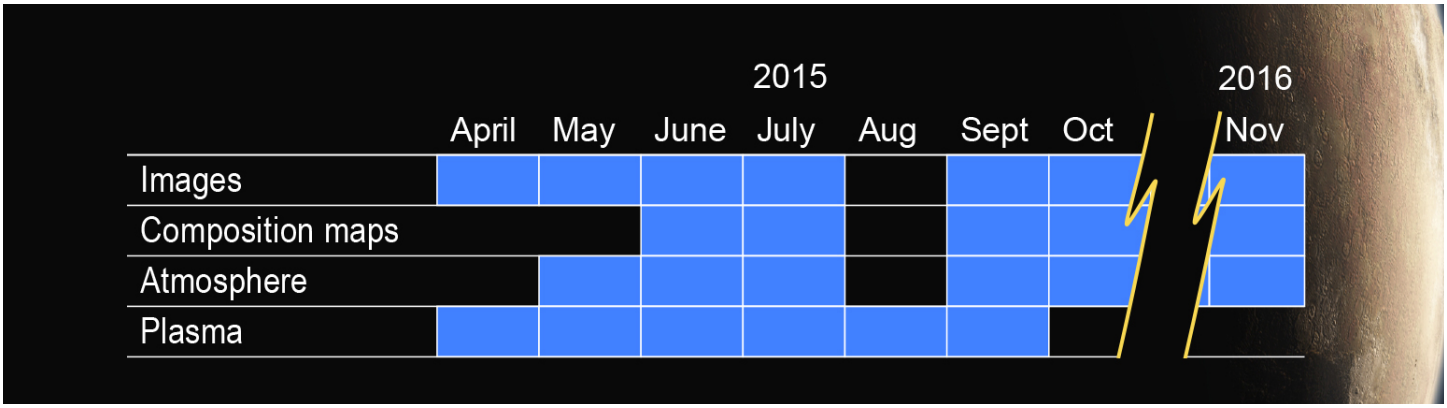


**No weekend at Pluto:** The New Horizons Pluto encounter is not a typical planetary flyby with a flurry of immediate data collection and transmission. Owing in part to the low transmission rates from Pluto, the spacecraft will be sending data back to Earth long (16 months) after it has finished collecting it; as a result, many of the mission's major discoveries will be made from examining data that arrives late in 2015 or during 2016, well after New Horizons flies through the Pluto system. In that respect, the science cadence will more closely resemble an orbiter mission, in the way Cassini had many initial findings on Saturn orbit insertion, followed by years of ongoing results.

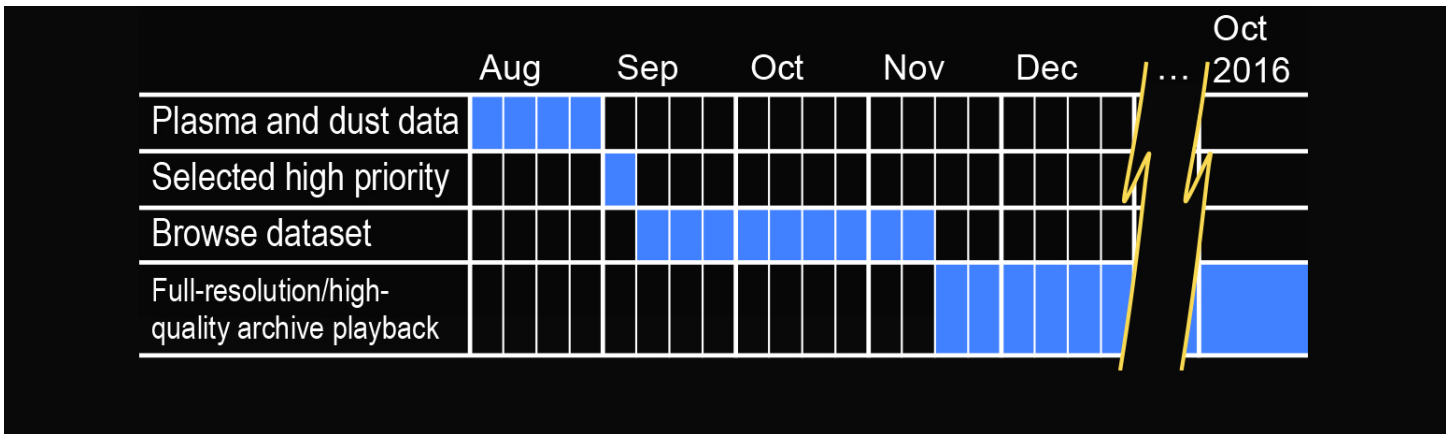


Types of data scheduled for downlink through the entire Pluto encounter.

## Into the Kuiper Belt — and Beyond

The decadal survey that called for the exploration of Pluto also insisted in the exploration of small KBOs that were the building blocks of planets like Pluto. So, after passing through the Pluto system, the spacecraft will be retargeted for an encounter with a small Kuiper Belt Object. New Horizons carries more than enough hydrazine fuel for such a KBO flyby; its communications system is designed to work from far beyond Pluto and its scientific instruments can work in light levels even lower than the dim sunlight at Pluto, where the sun is currently only 1/1000th as bright as it is at Earth.

The New Horizons team conducted a dedicated search for small KBOs the spacecraft could reach. In the early 2000s, no such KBOs had even been discovered. The National Academy of Sciences recommended that New Horizons fly by small KBOs about 20 to 50 kilometers (about 12 to 30 miles) across, which are more likely to be primitive bodies (less well-formed than planets like Pluto).

In 2014, using the Hubble Space Telescope, New Horizons science team members discovered three KBOs — all in the range of 20-55 kilometers across, and all with possible flyby dates in early 2019 — a record-setting billion miles beyond Pluto. In summer 2015, after the Pluto flyby, the New Horizons team will work with NASA to choose the best candidate among the three. This autumn, operators will fire the engines aboard New Horizons — at the optimal time to minimize the fuel required to reach the selected target — to begin the new journey to the selected KBO.

The team will then submit a formal proposal to explore additional KBOs in 2016; if NASA approves, the New Horizons Extended Mission would begin in 2017.

After that, the spacecraft will continue beyond the Kuiper Belt and into interstellar space, possibly on a second extended mission, if NASA approves. Like the Pioneer and Voyager spacecraft, New Horizons will escape the Sun's gravity and fly out into interstellar space — never to return to our solar system.

## Mission Operations

New Horizons mission operations are conducted from the Mission Operations Center at the Johns Hopkins University Applied Physics Laboratory (APL) in Laurel, Maryland, where the spacecraft was designed and built. Flight controllers and mission analysts plan, and monitor and operate the spacecraft, working closely with the multi-institutional science team, the science operating team in Boulder, Colorado, the mission design team at APL, and the navigation team at KinetX, Inc., based in Simi Valley, California.

The instruments aboard New Horizons are operated by command sequences generated by staff at APL and the Southwest Research Institute (SwRI). The mission's Tombaugh Science Operations Center (SOC), located at SwRI in Boulder, processes all instrument data for the science team, and it will produce data archives for the scientific community and public at large.

Like all NASA interplanetary missions, New Horizons relies on the agency's Deep Space Network of antenna stations to track and communicate with the spacecraft. The stations are located in California's Mojave Desert; near Madrid, Spain; and near Canberra, Australia. All three complexes communicate directly with the control center at NASA's Jet Propulsion Laboratory, Pasadena, California.

Data received on Earth through the Deep Space Network is sent to the New Horizons Mission Operations Center at APL, where data are "unpacked" and stored. The mission operations and instrument teams scour the engineering data for performance trend information, while science data is copied to the SOC in Boulder. At the Science Operations Center, data passes through "pipeline" software that converts the data from instrumental units to scientific units, based on calibration data obtained for each instrument. Both the raw and calibrated data files are formatted for New Horizons science team members to analyze. Raw and calibrated data, along with various ancillary files (such as documents describing the pipeline process or the science instruments) will also be archived in NASA's Planetary Data System.

## Planetary Pioneers

New Horizons will join an elite class of spacecraft when it becomes Pluto's first visitor. The United States has led the reconnaissance of the solar system, providing the first close-up look at every planet with a spacecraft.

| Planet | Mission (year) |
|---|---|
| Mercury | Mariner 10 (1973) |
| Venus | Mariner 2 (1962) |
| Mars | Mariner 4 (1965) |
| Jupiter | Pioneer 10 (1973) |
| Saturn | Pioneer 11 (1979) |
| Uranus | Voyager 2 (1985) |
| Neptune | Voyager 2 (1989) |

**History Repeated:** Mariner 4 made the first exploration of Mars on July 14, 1965 — exactly 50 years to the day before New Horizons' closest approach to Pluto!

## Education and Communications

The New Horizons education and communications (E/C) program (formerly designated Education and Public Outreach, or E/PO) taps into the excitement of going to uncharted territories and visiting an unexplored planet in a new region of the solar system. With a range of hands-on, minds-on learning experiences and materials, the program provides unique opportunities for students, educators, museums, science centers, Web surfers and other members of the public to ride along on the first mission to Pluto and the Kuiper Belt.

The E/C program includes a variety of formal lesson plans and learning materials — based on New Horizons science and engineering goals, and aligned with National Research Council's National Science Education Standards — that are helping students in grades K-12 learn more about science, technology, engineering and mathematics. The learning doesn't stop in high school: college students have designed and built an actual flight instrument on New Horizons — the Student Dust Counter — and held internships with the spacecraft integration and test team. Many of the New Horizons higher education initiatives focus on students from historically black colleges and universities and minority serving institutions.

New Horizons E/C programs go beyond the classroom, from a unique chance for people to send their names to Pluto on board the New Horizons spacecraft before launch, to opportunities for the public to access milestone events, mission data, and general information in places such as museums, science centers and libraries, TV and the Web — and, in 2015, through interactive "Plutopalooza" road shows.

For more information on the E/C team and New Horizons educational materials, visit: http://pluto.jhuapl.edu/Participate/.

## Eyes on Pluto

You can't actually fly on New Horizons, of course, but NASA's Eyes on the Solar System program lets anyone with an Internet connection virtually ride along on the spacecraft's journey to Pluto and beyond. The Eyes on Pluto module, available to download from http://eyes.nasa.gov, includes simulated views of what New Horizons "sees," including the ability to run through the entire Pluto encounter!

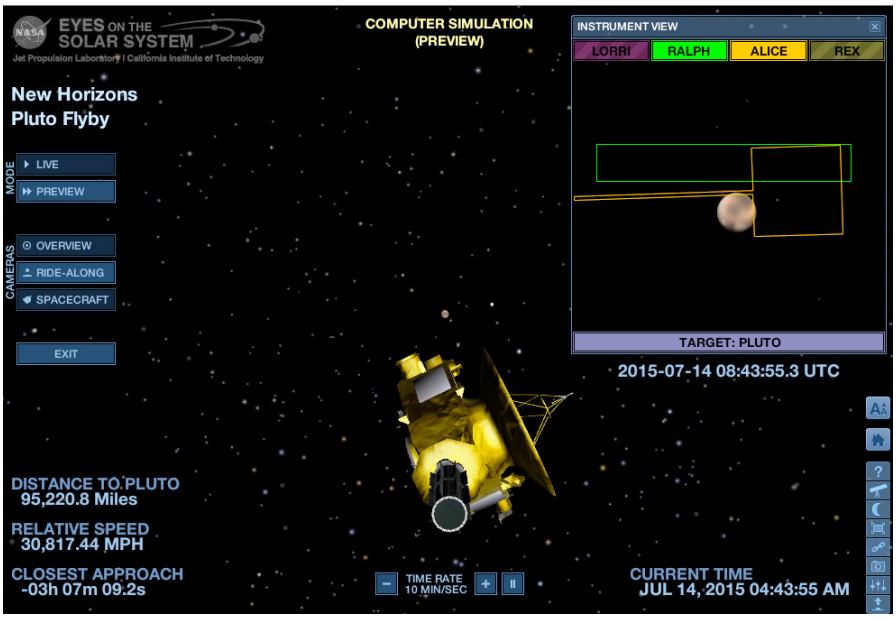


Eyes on Pluto: A simulated ride through the New Horizons Pluto Encounter.

## Real Science, Real Education

The Venetia Burney Student Dust Counter instrument, designed and built by students at the University of Colorado at Boulder, is a key part of the mission's E/C program. The device has been detecting dust grains produced by collisions between asteroids, comets and Kuiper Belt Objects during the long New Horizons' crossing of the solar system — but most notably, it is the first science instrument on a NASA planetary mission to be designed, built and operated by students.

With faculty supervision, the students have been distributing and archiving data from the instrument, and leading a comprehensive education and outreach effort to bring their results and experiences to classrooms of all grades. For a deeper look at the instrument and the team that developed it, visit http://lasp.colorado.edu/home/sdc/.

## Encounter Timeline: Key Dates

**June 2014:** Ground-based and space-based Pluto system observation campaign started from Earth

**July 2014:** First optical navigation campaign began; trajectory correction maneuver on July 14

**August 25, 2014:** New Horizons crossed Neptune's orbit; took distant images of Neptune

**December 6, 2014:** New Horizons exited its last hibernation period before the Pluto encounter

**January 2015:** Ninth launch anniversary; Approach Phase 1 (distant encounter operations) began, optical navigation intensified, environmental monitoring with SWAP, PEPSSI and SDC began

**April 2015:** Approach Phase 2 began, New Horizons obtains best-ever images of Pluto

**May 2015:** Hazard observations began

**June 2015:** Approach Phase 3 begins

**July 4, 2015:** Last day to choose a "Safe Haven By Other Trajectory" path, or to keep the spacecraft on its original trajectory through the Pluto system

**July 7, 2015:** Core command load (for Pluto encounter) engages in spacecraft computer

**July 12-13, 2015:** "P-1" and "P-2" days; "fail safe" datasets (pre-flyby) sent back to Earth

**July 14, 2015:** Pluto system flyby; close approach to Pluto at 7:49 a.m. EDT

**July 15, 2015:** First-post flyby data returned; core command load disengages and Departure Phase 1 begins

**August 2015:** Departure Phase 2 begins

**October 2015:** Departure Phase 3 begins

**October-November 2105:** "Targeting" trajectory correction maneuver for possible Kuiper Belt Object encounter

**November 2015:** All browse data downloaded

**January 2016:** Pluto encounter formally ends

**July 2016:** Post-encounter calibrations completed

**October-December 2016:** Data playback of all encounter data completes

**March 2017:** Final Pluto Planetary Data System delivery

**November 2017:** Pluto Science Conference

# Spacecraft Systems and Components

Designed and integrated at the Johns Hopkins University Applied Physics Laboratory (APL) in Laurel, Maryland — with contributions from companies and institutions in the United States and abroad — New Horizons is a high-tech, robust, lightweight spacecraft designed to withstand a long, difficult journey to the solar system's coldest, darkest frontiers.

The New Horizons science payload was developed under direction of the Southwest Research Institute (SwRI), with instrument contributions from SwRI, APL, NASA's Goddard Space Flight Center, the University of Colorado, Stanford University and Ball Aerospace and Technologies Corporation. Fully fueled, the agile, piano-sized probe weighed 478 kilograms (1,054 pounds) at launch. Designed to operate on a limited power source — a single radioisotope thermoelectric generator — New Horizons needs less power than a pair of 100-watt light bulbs to complete its mission at Pluto. All of its operational subsystems include redundant backup systems.

On average, each of the seven science instruments uses between 2 and 10 watts — about the power of a night light — when turned on. The instruments send data to one of two onboard solid-state memory banks, where data is recorded for later playback to Earth. During normal operations, the spacecraft communicates with Earth through its 2.1-meter (83-inch) wide high-gain antenna. Smaller antennas provided limited, backup communications. And when the spacecraft was in hibernation through long stretches of its voyage, its computer was programmed to monitor its systems and report its status back to Earth with a specially coded, low-energy beacon signal.

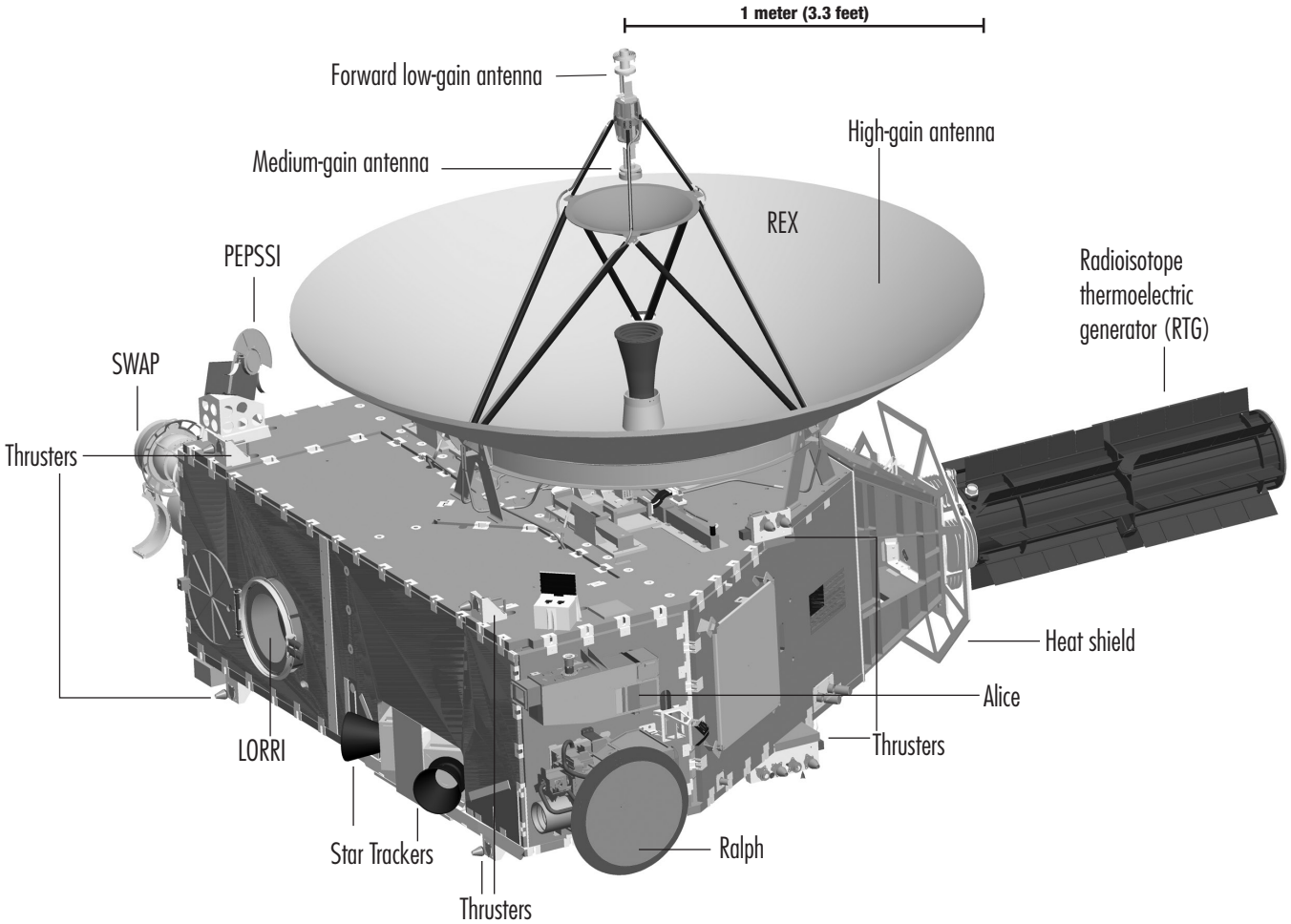


New Horizons' "thermos bottle" design retains heat and keeps the spacecraft operating at room temperature without large heaters. Aside from protective covers on five instruments that were opened shortly after launch, and one small protective cover opened after the Jupiter encounter, New Horizons has no deployable mechanisms or scanning platforms. It does have backup devices for all major electronics, its star-tracking navigation cameras and data recorders.

New Horizons operated mostly in a spin-stabilized mode during the eight-year cruise between Jupiter and Pluto, and also in a three-axis "pointing" mode that allows for pointing or scanning instruments during calibrations and planetary encounters (like the Jupiter flyby and, of course, at Pluto). There are no reaction wheels on the spacecraft; small thrusters

in the propulsion system handle pointing, spinning and course corrections. The spacecraft navigates using onboard gyros, star trackers and Sun sensors. The spacecraft's high-gain antenna dish is linked to advanced electronics and shaped to receive even the faintest radio signals from home — a necessity when the mission's main target is 3 billion miles from Earth and round-trip transmission time is nine hours.

## Structure

New Horizons' primary structure includes an aluminum central cylinder that supports honeycomb panels, supports the interface between the spacecraft and its (radioisotope thermoelectric generator) power source, houses the propellant tank, and serves as the payload adapter fitting that connects the spacecraft to the launch vehicle. Keeping mass down, the panels surrounding the central cylinder feature an aluminum honeycomb core with ultra-thin aluminum face sheets (about as thick as two pieces of paper). To keep it perfectly balanced for spinning operations, the spacecraft was weighed and then balanced with additional weights just before mounting on the launch vehicle.

## Command and Data Handling

The command and data handling system — a radiation-hardened 12 megahertz Mongoose V processor guided by intricate flight software — is the spacecraft's "brain." The processor distributes operating commands to each subsystem, collects and processes instrument data, and sequences information sent back to Earth. It also runs advanced "autonomy" algorithms (essentially a remote pilot) that allow the spacecraft to check the status of each system and, if necessary, correct any problems, switch to backup systems or contact operators on Earth for help.

For data storage, New Horizons carries two low-power solid-state recorders (one backup) that can hold up to 8 gigabytes (64 gigabits) each. The main processor collects, compresses, reformats, sorts and stores science and housekeeping (telemetry) data on the recorder — similar to a flash memory card for a digital camera — for transmission to Earth through the telecommunications subsystem.

The Command and Data Handling processor, data recorder, power converters, Guidance and Control processor, radio science and tracking electronics, and interfaces between the processors and science instruments are housed in the Integrated Electronics Module (IEM), a space- and weight-saving device that combines the spacecraft's core avionics in a single box. New Horizons carries a redundant IEM as a backup.

## Thermal Control

New Horizons is designed to retain heat like a thermos bottle. The spacecraft is covered in lightweight, gold-colored, multilayered thermal insulation blankets, which hold in heat from operating electronics to keep the spacecraft warm. Heat from the electronics has kept the spacecraft operating at between 10-30 degrees Celsius (about 50-85 degrees Fahrenheit) throughout the journey.

New Horizons thermal blanketing: an inside look.

New Horizons' sophisticated, automated heating system monitors power levels inside the craft to make sure the electronics are running at enough wattage to maintain safe temperatures. Any drop below that operating level (about 150 watts) and it will activate small heaters around the craft to make up the difference. When the spacecraft was closer to Earth and the Sun, louvers (essentially heat vents) on the craft opened when internal temperatures were too high.

The thermal blanketing — 18 layers of Dacron mesh cloth sandwiched between aluminized Mylar and Kapton film — also helps to protect the craft from micrometeorites and other hazardous debris.

## Propulsion

The propulsion system on New Horizons is used for course corrections and for pointing the spacecraft. It is not needed to speed the spacecraft to Pluto; that was done entirely by the launch vehicle, with a boost from Jupiter's gravity.

The New Horizons propulsion system includes 16 small hydrazine-propellant thrusters mounted across the spacecraft in eight locations, a fuel tank, and associated distribution plumbing. Four thrusters that each provide 4.4 newtons (1 pound) are used mostly for course corrections. Operators also employ 12 smaller thrusters — providing 0.8 newtons (about 3 ounces) of thrust each — to point, spin up and spin down the spacecraft. Eight of the 16 thrusters aboard New Horizons are considered the primary set; the other eight comprise the backup (redundant) set.

At launch, the spacecraft carried 77 kilograms (170 pounds) of hydrazine, stored in a lightweight titanium tank. More than half of the fuel remains, enough for Pluto encounter, Pluto data downlink, and a robust extended KBO mission. Helium gas pushes fuel through the system to the thrusters. Using a Jupiter gravity assist, along with the fact that New Horizons does not need to slow down enough to enter orbit around Pluto, reduced the amount of propellant needed for the mission.

## Guidance and Control

New Horizons must be oriented in a particular direction to collect data with its scientific instruments, communicate with Earth, or maneuver through space.

Attitude determination — knowing which direction New Horizons is facing — is performed using star-tracking cameras, Inertial Measurement Units (containing sophisticated gyroscopes and accelerometers that measure rotation and horizontal/vertical motion), and digital solar sensors. Attitude control for the spacecraft — whether in a steady, three-axis pointing mode or in a spin-stabilized mode — is accomplished using thrusters.

The IMUs and star trackers provide constant positional information to the spacecraft's Guidance and Control processor, which like the Command and Data Handling processor is a 12-MHz Mongoose V. New Horizons carries two copies of each of these units for redundancy. The star-tracking cameras store a map of about 3,000 stars; 10 times per second one of the cameras snaps a wide-angle picture of space, compares the locations of the stars to its onboard map, and calculates the spacecraft's orientation. The IMU feeds motion information 100 times a second. If data shows New Horizons is outside a predetermined position, small hydrazine thrusters will fire to re-orient the spacecraft. The Sun sensors back up the star trackers; in an emergency they would find and point New Horizons toward the Sun (with Earth nearby) if the other sensors couldn't find home.

Operators use thrusters to maneuver the spacecraft, which has no internal reaction wheels. Its smaller thrusters are used for fine pointing; thrusters that are approximately five times more powerful are used during the trajectory course maneuvers that guide New Horizons toward its targets. New Horizons spins — typically at 5 revolutions per minute — during trajectory-correction maneuvers and long radio contacts with Earth, as well as while it "hibernated" during long cruise periods. Operators steady and point the spacecraft during science observations and instrument-system checkouts.

## Communications

New Horizons' X-band communications system is the spacecraft's link to Earth, returning science data, exchanging commands and status information, and allowing for precise radiometric tracking through NASA's Deep Space Network of antenna stations.

The system includes two broad-beam, low-gain antennas on opposite sides of the spacecraft, used mostly for near-Earth communications; as well as a 30-centimeter (12-inch) diameter medium-gain dish antenna and a large, 2.1-meter (83-inch) diameter high-gain dish antenna. The antenna assembly on the spacecraft's top deck consists of the high, medium, and forward low-gain antennas; this stacked design provided a clear field of view for the low-gain antenna and structural support for the high and medium-gain dishes. Operators aim the antennas by turning the spacecraft toward Earth. The high-gain beam is only 0.3 degrees wide, so it must point directly at Earth. The wider medium-gain beam (14 degrees) is used in conditions when the pointing might not be as accurate. All antennas have Right Hand Circular and Left Hand Circular polarization feeds.

Data rates depend on spacecraft distance, the power used to send the data and the size of the antenna on the ground. For most of the mission, New Horizons has used its high-gain antenna to exchange data with the Deep Space Network's largest antennas, 70 meters across. At Pluto, because New Horizons is about 3 billion miles from Earth and radio signals take more than four hours to reach the spacecraft, it can send information at about 2,000 bits per second. It will take 16 months to send the full set of Pluto encounter science data back to Earth.

New Horizons is flying the most advanced digital receiver ever used for deep space communications. Advances include regenerative ranging and low power — the receiver consumes 66% less power than earlier deep-space receivers. The Radio Science Experiment (REX) that will be used to examine Pluto's atmosphere is also integrated into the communications subsystem. The entire telecom system on New Horizons is redundant, with two of everything except the high gain antenna structure itself.

## Power

New Horizons' electrical power comes from a single radioisotope thermoelectric generator (RTG), shown below, which provides power through the natural radioactive decay of plutonium dioxide fuel. The New Horizons RTG, provided by the U.S. Department of Energy, carries approximately 11 kilograms (24 pounds) of plutonium dioxide. Onboard systems manage the spacecraft's power consumption so it doesn't exceed the steady output from the RTG, which has decreased by about 3.3 watts per year since launch.

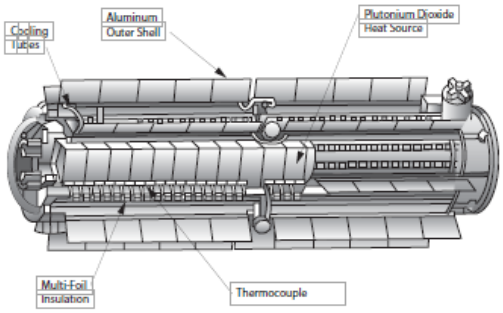


Typical of RTG-based systems, and as on past outer-planet missions, New Horizons does not have a battery for storing power.

At the start of the mission, the RTG supplied approximately 245 watts (at 30 volts of direct current) — the spacecraft's shunt regulator unit maintains a steady input from the RTG and dissipates power the spacecraft cannot use at a given time. Now, more than nine years after launch, that supply has decreased to just under 202 watts, so New Horizons must carefully distribute its power by cycling science instruments on and off during the encounter.

The spacecraft's fully redundant Power Distribution Unit (PDU) — with 96 connectors and more than 3,200 wires — efficiently moves power through the spacecraft's vital systems and science instruments.

Many scientific instruments work better when they are cold; that's one reason why they are located opposite the RTG on the spacecraft. New Horizons also has a heat shield around the base of the RTG to avoid a direct line of sight from the instruments to the RTG. These design features help avoid any interference from the RTG with scientific measurements.

RTGs have powered some of NASA's greatest voyages; read more at: http://rps.nasa.gov.

## Mementos to Pluto — and Beyond

Along with the advanced instruments and systems that enable New Horizons' historic exploration of Pluto and the Kuiper Belt, the spacecraft carries nine mementos:

- A portion of Pluto discoverer Clyde Tombaugh's ashes and an inscription
- A "Send Your Name to Pluto" CD-ROM with more than 434,000 names of people who wanted to participate in this great journey of exploration
- A CD-ROM with project personnel pictures and messages
- A Florida state quarter, representing where New Horizons was launched
- A Maryland state quarter, representing where New Horizons was built
- A cutout piece of the historic SpaceShipOne and an inscription
- Two U.S. flags
- The 1991 U.S. stamp proclaiming, "Pluto: Not Yet Explored"

# Science Instruments

New Horizons packs the most advanced suite of cameras and spectrometers ever sent on a first reconnaissance mission. The New Horizons science payload consists of seven instruments — three optical instruments, two plasma instruments, a dust sensor and a radio science receiver/radiometer. This payload was designed to investigate the global geology, surface composition and temperature, and the atmospheric pressure, temperature, composition, and escape rate from Pluto and its largest moon.

The payload is incredibly power efficient — with the instruments collectively drawing less than 28 watts — and represents a degree of miniaturization that is unprecedented in planetary exploration. The instruments were designed specifically to handle the cold conditions and low light levels at Pluto and in the Kuiper Belt beyond.

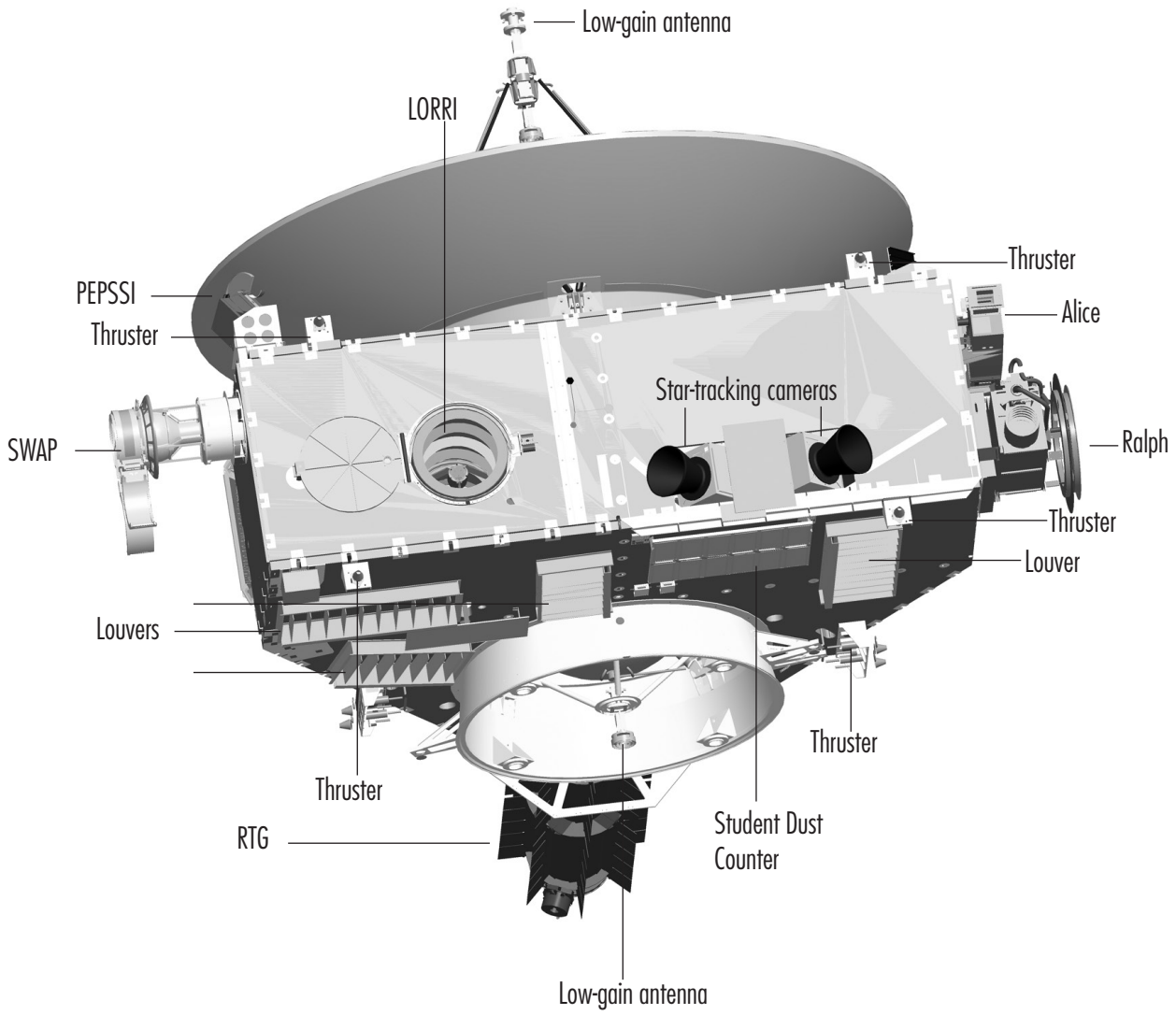

## Alice

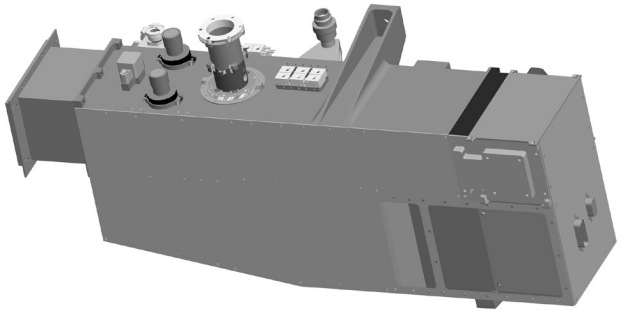

**Mass:** 4.5 kilograms (9.9 pounds)
**Average Power:** 4.4 watts
**Development:** Southwest Research Institute
**Principal Investigator:** Alan Stern, Southwest Research Institute
**Purpose:** Study atmospheric composition and structure

Alice is a sensitive ultraviolet imaging spectrometer designed to probe the composition and structure of Pluto's dynamic atmosphere. Where a spectrometer separates light into its constituent wavelengths (like a prism), an "imaging spectrometer" both separates the different wavelengths of light and produces an image of the target at each wavelength. Alice's spectroscopic range extends across both extreme and far-ultraviolet wavelengths from approximately 500 to 1,800 Angstroms. The instrument will detect a variety of important atomic and molecular species in Pluto's atmosphere, and determine their relative abundances, giving scientists the first complete picture of Pluto's atmospheric composition. Alice will search for an ionosphere around Pluto and an atmosphere around Pluto's largest moon, Charon. It will also probe the density of Pluto's atmosphere, and the atmospheric temperature of Pluto, both as a function of altitude.

Alice consists of a compact telescope, a spectrograph, and a sensitive electronic detector with 1,024 spectral channels at each of 32 separate spatial locations in its long, rectangular field of view. Alice has two modes of operation: an "airglow" mode that measures ultraviolet emissions from atmospheric constituents, and an "occultation" mode, where it views the Sun or a bright star through an atmosphere and detects atmospheric constituents by the amount of sunlight they absorb. Absorption of sunlight by Pluto's atmosphere will show up as characteristic "dips" and "edges" in the ultraviolet part of the spectrum of light that Alice measures. This technique is a powerful method for measuring even traces of atmospheric gas.

A first-generation version of New Horizons' Alice (smaller and a bit less sophisticated) is flying aboard the European Space Agency's Rosetta spacecraft, examining the surface of comet 67P/Churyumov-Gerasimenko and studying its escaping atmosphere and complex surface. Other Alice instruments are in flight aboard NASA's Lunar Reconnaissance Orbiter and Juno Spacecraft.

## Ralph

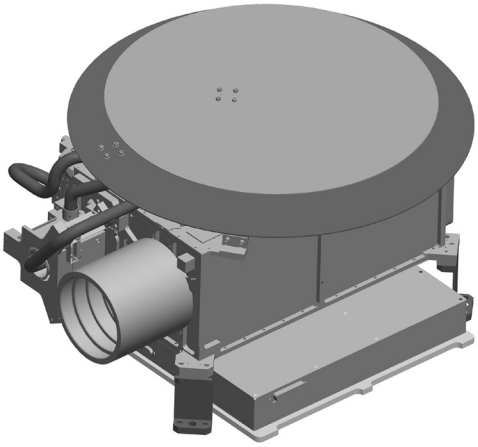

**Mass:** 10.3 kilograms (22.7 pounds)
**Average Power:** 6.3 watts
**Development:** Ball Aerospace and Technologies Corporation, NASA Goddard Space Flight Center, Southwest Research Institute
**Principal Investigator:** Alan Stern, Southwest Research Institute
**Purpose:** Study surface geology and morphology; obtain surface composition and surface temperature maps

Ralph is the main "eyes" of New Horizons and is charged with making the maps that show what Pluto, its moons, and (potentially) other Kuiper Belt Objects look like. (The instrument is so named because it's coupled with an ultraviolet spectrometer called Alice in the New Horizons remote-sensing package — a reference familiar to fans of "The Honeymooners" TV show.)

Ralph consists of three panchromatic (black-and-white) and four color imagers inside its Multispectral Visible Imaging Camera (MVIC), as well as an infrared compositional mapping spectrometer called the Linear Etalon Imaging Spectral Array (LEISA). LEISA is an advanced, miniaturized short-wavelength infrared (1.25-2.50 micron) spectrometer provided by NASA's Goddard Space Flight Center. MVIC operates over the bandpass from 0.4 to 0.95 microns. Ralph's suite of eight detectors — seven charge-coupled devices (CCDs) like those found in a digital camera, and a single infrared array detector — are fed by a single, sensitive magnifying telescope with a resolution more than 10 times better than the human eye can see. The entire package operates on less than half the wattage of a nightlight.

Ralph will take images twice daily as New Horizons approaches, flies past and then looks back at the Pluto system. Ultimately, MVIC will map landforms in black-and-white and color with a best resolution of about 250 meters (820 feet) per pixel, take stereo images to determine surface topography, and help scientists refine the radii and orbits of Pluto and

its moons. It will aid the search for clouds and hazes in Pluto's atmosphere, and for rings and additional satellites around Pluto. It will also obtain images of Pluto's night side, illuminated by "Charon-light." At the same time, LEISA will map the amounts of nitrogen, methane, carbon monoxide, and frozen water and other materials, including organic compounds, across the sunlit surfaces of Pluto and its moons.

LEISA will also let scientists map surface temperatures across Pluto and Charon by sensing the temperature diagnostic spectral features of frozen nitrogen, water and carbon monoxide. And Pluto is so far from the Sun that Ralph must work with light levels 1,000 times fainter than daylight at Earth — or 400 times fainter than conditions Mars probes face — so it is incredibly sensitive.

## Radio Science Experiment (REX)

**Mass:** 100 grams (3.5 ounces)
**Average Power:** 2.1 watts
**Development:** Johns Hopkins University Applied Physics Laboratory, Stanford University
**Principal Investigators:** Len Tyler and Ivan Linscott, Stanford University
**Purpose:** Measure atmospheric temperature and pressure (down to the surface); measure density of the ionosphere; search for atmospheres around Charon and (possibly) other KBOs; determine the mass and density of Pluto and Charon; determine the surface day and night temperatures.

REX consists only of a miniaturized printed circuit board containing sophisticated signal-processing electronics integrated into the New Horizons telecommunications system. Because the telecom system is redundant within New Horizons, the spacecraft carries two copies of REX. Both can be used simultaneously to improve the data return from the radio science experiment.

REX will use an occultation technique to probe Pluto's atmosphere and to search for an atmosphere around Charon. After New Horizons flies by Pluto, its 2.1-meter (83-inch) dish antenna will point back to Earth. On Earth, powerful transmitters in NASA's largest Deep Space Network antennas will beam radio signals to the spacecraft as it passes behind Pluto. The radio waves will bend according to the average molecular weight of gas in the atmosphere and the atmospheric temperature. The same phenomenon could happen at Charon if the large moon has a substantial atmosphere, though Earth-based studies indicate this is unlikely.

Space missions typically conduct this type of experiment by sending a signal from the spacecraft through a planet's atmosphere and back to Earth. (This is called a "downlink" radio experiment.) New Horizons will be the first to use a signal from Earth — the spacecraft will be so far from home and moving so quickly past Pluto and Charon that only a large, ground-based antenna can provide a strong enough signal. This new technique, called an "uplink" radio experiment, is an important advance beyond previous outer planet missions.

REX will also measure the weak radio emissions from Pluto and Charon. Scientists will use that data to derive accurate day-side and night-side temperature measurements. Also, by using REX to track slight changes in the spacecraft's path, scientists will measure the masses and densities of Pluto and Charon and possibly the masses of additional Kuiper Belt Objects in order to develop models of the interior of each body. By timing the length of the radio occultations of Pluto and Charon, REX will also yield improved radii measurements for each body and will attempt to detect radar signals from Earth that reflect off Pluto during the flyby to probe Pluto's surface properties.

## Long Range Reconnaissance Imager (LORRI)

**Mass:** 8.8 kilograms (19.4 pounds)
**Average Power:** 5.8 watts
**Development:** Johns Hopkins University Applied Physics Laboratory
**Principal Investigator:** Andy Cheng, Applied Physics Laboratory
**Purpose:** Study geology; provide high-resolution approach and highest-resolution encounter images

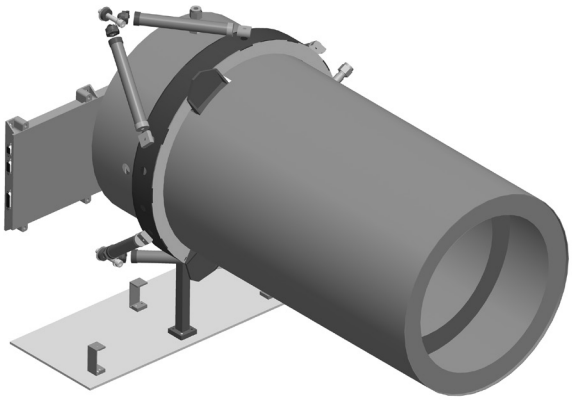

LORRI, the "eagle eyes" of New Horizons, is a panchromatic high-magnification imager, consisting of a telescope with an 8.2-inch (20.8-centimeter) aperture that focuses visible light onto a charge-coupled device (CCD). It's essentially a digital camera with a large telephoto telescope — only fortified to operate in the cold, hostile environs near Pluto.

As the encounter began, LORRI images were New Horizons' first of the Pluto system, starting in January 2015. At the time, Pluto and its moons resembled little more than bright dots, but these system-wide views have been helping navigators keep the spacecraft on course and helping scientists refine their orbit calculations of Pluto and its moons.

At closest approach, LORRI will image select sections of Pluto's sunlit surface at football-field-size resolution, resolving features as small as 70 meters across. Three days before, it will map the "far side" hemisphere of Pluto.

This range of images will give scientists an unprecedented look at the geology on Pluto, Charon, and additional Kuiper Belt Objects — including the number and size of craters on each surface, revealing the history of impacting objects in that distant region. LORRI will also yield important information on the history of Pluto's surface, search for activity such as geysers, and look for hazes in Pluto's atmosphere. LORRI will also provide the highest resolution images of any Kuiper Belt Objects New Horizons would fly by in an extended mission.

LORRI has no color filters or moving parts — operators will take images by pointing the LORRI side of the spacecraft directly at their target. The instrument's innovative silicon carbide construction will keep its mirrors focused through the extreme temperature dips New Horizons will experience on the way to, through and past the Pluto system.

## Solar Wind at Pluto (SWAP)

**Mass:** 3.3 kilograms (7.3 pounds)
**Average Power:** 2.3 watts
**Development:** Southwest Research Institute
**Principal Investigator:** David McComas, Southwest Research Institute
**Purpose:** Study solar wind interactions and atmospheric escape

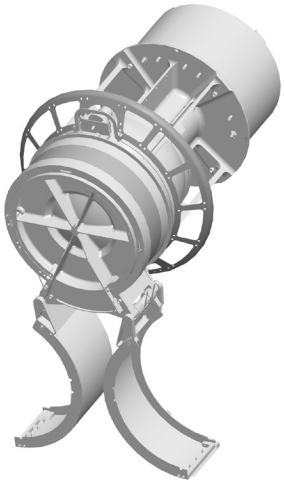

The SWAP instrument will measure interactions of Pluto with the solar wind — the high-speed stream of charged particles flowing from the Sun. The incredible distance of Pluto from the Sun required the SWAP team to build the largest-aperture instrument ever used to measure the solar wind.

Pluto's small gravitational acceleration (approximately 1/16 of Earth's gravity) leads scientists to think that about 75 kilograms (165 pounds) of material escape its atmosphere every second. The atmospheric gases that escape Pluto's weak gravity leave the planet as neutral atoms and molecules. These atoms and molecules are ionized by ultraviolet sunlight (similar to Earth's upper atmosphere and ionosphere). Once they become electrically charged, the ions and electrons become "picked up" and are carried away by the solar wind. In the process, these pickup ions gain substantial energy (thousands of electron-volts). This energy comes from the solar wind, which is correspondingly slowed down and diverted around Pluto. SWAP measures low-energy interactions, such as those caused by the solar wind. By measuring how and where the solar wind is blocked by Pluto's escaping atmosphere, SWAP will determine the escape rate of atmospheric material from Pluto.

At the top of its energy range SWAP can detect some pickup ions (up to 6.5 kiloelectron volts, or keV). SWAP combines a retarding potential analyzer (RPA) with an electrostatic analyzer (ESA) to enable extremely fine, accurate energy measurements of the solar wind, allowing New Horizons to measure minute changes in solar wind speed. The amount of Pluto's atmosphere that escapes into space provides critical insights into the structure and destiny of the atmosphere itself.

## Pluto Energetic Particle Spectrometer Science Investigation (PEPSSI)

**Mass:** 1.5 kilograms (3.3 pounds)
**Average Power:** 2.5 watts
**Development:** Johns Hopkins University Applied Physics Laboratory
**Principal Investigator:** Ralph McNutt Jr., Applied Physics Laboratory
**Purpose:** Study the density and composition of energetic particles and plasmas resulting from the escape of Pluto's atmosphere

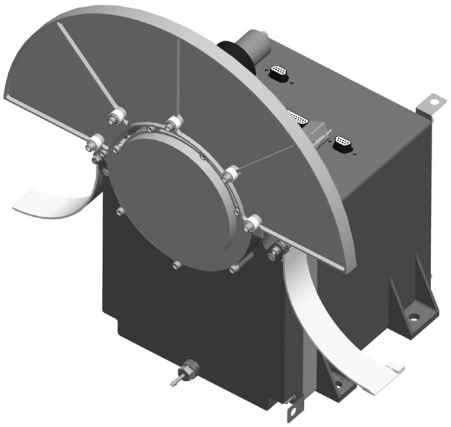

PEPSSI, the most compact, lowest-power directional energetic particle spectrometer flown on a space mission, will search for neutral atoms that escape Pluto's atmosphere and become charged by their interaction with the solar wind. It will detect the material that escapes from Pluto's atmosphere (such as molecular nitrogen, carbon monoxide and methane), which break up into ions and electrons after absorbing the Sun's ultraviolet light, and stream away from Pluto as "pickup" ions carried by the solar wind.

The instrument will likely get its first taste of Pluto's atmosphere when the planet is still millions of miles away. By using PEPSSI to count particles, and knowing how far New Horizons is from Pluto at a given time, scientists will be able to tell how quickly the planet's atmosphere is escaping and gain new information about the composition of the atmosphere.

PEPSSI is a classic "time-of-flight" particle instrument: particles enter the detector and knock other particles (electrons) from a thin foil; they zip toward another foil before hitting a solid-state detector. The instrument clocks the time between the foil collisions to tell the particle's speed (measuring its mass) and figures its total energy when it collides with the solid-state detector. From this, scientists can determine the composition of each particle. PEPSSI can measure energetic particles up to 1,000 kiloelectron volts (keV), many times more energetic than what SWAP can measure. Together the two instruments make a powerful combination for studying the particles and plasma in the Pluto system.

## Venetia Burney Student Dust Counter (SDC)

**Mass:** 1.9 kilograms (4.2 pounds)
**Average Power:** 5 watts
**Development:** Laboratory for Atmospheric and Space Physics, University of Colorado at Boulder
**Principal Investigator:** Mihaly Horanyi, University of Colorado at Boulder
**Purpose:** Measure concentration of dust particles across the outer solar system

Designed and built by students at the University of Colorado at Boulder, the SDC detects microscopic dust grains produced by collisions among asteroids, comets, and even Kuiper Belt Objects during New Horizons' long journey. Officially a New Horizons Education and Public Outreach project, SDC is the first science instrument on a NASA planetary mission to be designed, built and "flown" by students.

The SDC counts and measures the sizes of dust particles, producing information on the collision rates of such bodies in the outer solar system. SDC will also be used to search for dust in the Pluto system; such dust might be generated by collisions of tiny "impactors" on Pluto's small moons.

The instrument includes two major pieces: an 18-by-12-inch detector assembly, which is mounted on the outside of the spacecraft and exposed to the dust particles; and an electronics box inside the spacecraft that, when a hit occurs on the detector, deciphers the data and determines the mass and speed of the particle. Because no dust detector has ever flown beyond 18 astronomical units from the Sun (nearly 1.7 billion miles, about the distance from Uranus to the Sun), SDC data is giving scientists an unprecedented look at the sources and transport of dust in the solar system.

With faculty support, University of Colorado students have been distributing and archiving data from the instrument, and lead a comprehensive education and outreach effort to bring their results and experiences to classrooms of all grades.

In June 2006 the instrument was named for Venetia Burney, who at age 11 offered the name “Pluto” for the newly discovered ninth planet in 1930. Read about that here: http://pluto.jhuapl.edu/news_center/news/062906.php

## Tech Specs

Visit http://pluto.jhuapl.edu/spacecraft/instruments.html for a chart of instrument technical specifications.

### Fact:

The combined weight of all seven New Horizons instruments is less than just the primary camera (Imaging Science Subsystem) on NASA’s Cassini Saturn orbiter.

## New Horizons Management Team

Alan Stern, of the Southwest Research Institute's (SwRI) Boulder, Colorado, operation, leads the New Horizons mission as principal investigator. The Johns Hopkins University Applied Physics Laboratory (APL), Laurel, Maryland, manages the New Horizons mission for the Science Mission Directorate, NASA Headquarters, Washington, D.C.

At NASA Headquarters, John Grunsfeld is the associate administrator for the Science Mission Directorate and Geoffrey Yoder is deputy associate administrator for the Science Mission Directorate. James Green is the director of the Planetary Science Division. Curt Neibur is the New Horizons program scientist and Adriana Ocampo is the New Horizons program executive. At NASA's Marshall Space Flight Center, Hunstville, Alabama, Allen Bacskay is the New Frontiers program manager and James Lee is New Horizons mission manager.

At APL, Glen Fountain is the New Horizons project manager, Peter Bedini is deputy project manager and Harold Weaver is New Horizons project scientist. Mark Holdridge is encounter mission manager, Alice Bowman is mission operations manager, Chris Hersman is mission systems engineer, Yanping Guo is mission design team lead and Kerri Beisser is education and communications manager. Michael Ryschkewitsch is the head of the APL Space Exploration Sector and Ralph Semmel is the director of the Applied Physics Laboratory.

At SwRI in Boulder, Leslie Young and Cathy Olkin are New Horizons deputy project scientists, and Tiffany Finley is the Tombaugh Science Operations Center team lead. At SwRI in San Antonio, John Andrews is New Horizons project manager. James Burch is vice president of the Space Science and Engineering Division and Adam Hamilton is the president of the Southwest Research Institute, San Antonio.

Kimberly Ennico, from NASA Ames Research Center, Mountain View, California, is a deputy project scientist. Bobby Williams leads the project navigation team at KinetX Inc., Simi Valley, California.

The New Horizons science team includes co-investigators from: Southwest Research Institute, Boulder, Colorado; Southwest Research Institute, San Antonio; Johns Hopkins University Applied Physics Laboratory, Laurel, Maryland; NASA Goddard Space Flight Center, Greenbelt, Maryland; University of Colorado, Boulder; Massachusetts Institute of Technology, Cambridge; NASA Jet Propulsion Laboratory, Pasadena, California; NASA Ames Research Center, Moffett Field, California; Lowell Observatory, Flagstaff, Arizona; Lunar and Planetary Institute, Houston; SETI Institute, Mountain View, California; Stanford University, Palo Alto, California; Washington University, St. Louis; Space Science Institute, Boulder, Colorado; Ball Aerospace, Boulder, Colorado; and George Mason University, Fairfax, Virginia.

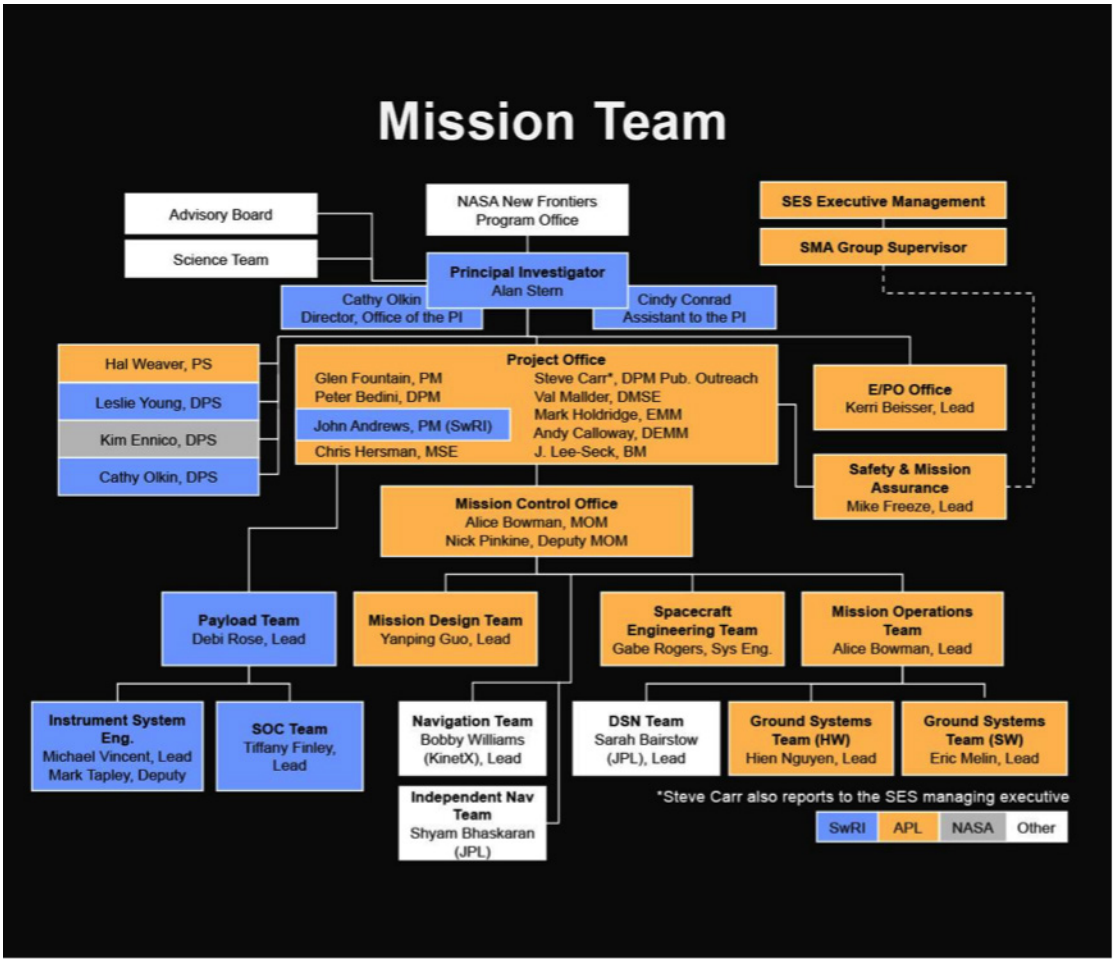
Mission Team
Advisory Board
Science Team
NASA New Frontiers Program Office
SES Executive Management
SMA Group Supervisor
Principal Investigator
Alan Stern
Cathy Olkin
Director, Office of the PI
Cindy Conrad
Assistant to the PI
Hal Weaver, PS
Leslie Young, DPS
Kim Ennico, DPS
Cathy Olkin, DPS
Project Office
Glen Fountain, PM
Peter Bedini, DPM
John Andrews, PM (SwRI)
Chris Hersman, MSE
Steve Carr*, DPM Pub. Outreach
Val Mallder, DMSE
Mark Holdridge, EMM
Andy Calloway, DEMM
J. Lee-Seck, BM
E/PO Office
Kerri Beisser, Lead
Safety & Mission Assurance
Mike Freeze, Lead
Mission Control Office
Alice Bowman, MOM
Nick Pinkine, Deputy MOM
Payload Team
Debi Rose, Lead
Mission Design Team
Yanping Guo, Lead
Spacecraft Engineering Team
Gabe Rogers, Sys Eng.
Mission Operations Team
Alice Bowman, Lead
Instrument System Eng.
Michael Vincent, Lead
Mark Tapley, Deputy
SOC Team
Tiffany Finley, Lead
Navigation Team
Bobby Williams (KinetX), Lead
Independent Nav Team
Shyam Bhaskaran (JPL)
DSN Team
Sarah Bairstow (JPL), Lead
Ground Systems Team (HW)
Hien Nguyen, Lead
Ground Systems Team (SW)
Eric Melin, Lead
*Steve Carr also reports to the SES managing executive
SwRI
APL
NASA
Other