HYBRID

National Aeronautics and
Space Administration

NASA-STD-8719.15
Draft 2 November 2000

This document has been canceled.

Note: Canceled or superseded standards may remain valid on contracts after the date of the standard's cancellation or supersession. Always check the contract to determine the applicability of a specific standard.

SAFETY STANDARD FOR OXYGEN AND OXYGEN SYSTEMS

Guidelines for Oxygen System Design, Materials Selection, Operations, Storage, and Transportation

NASA TECHNICAL STANDARD

PREFACE

This safety standard establishes a uniform Agency process for oxygen system design, materials selection, operation, storage, and transportation. This standard contains minimum guidelines applicable to NASA Headquarters and all NASA Field Installations. Installations are encouraged to assess their individual programs and develop additional requirements as needed. “Shalls” and “wills” denote requirements that are mandated in other existing documents referenced at the end of each chapter and in widespread use in the aerospace industry.

This standard is issued in loose-leaf form and will be revised by change pages.

Comments and questions concerning the contents of this publication should be referred to the National Aeronautics and Administration Headquarters, Director, Safety and Risk Management Division, Office of the Associate for Safety and Mission Assurance, Washington, DC 20546.

Frederick D. Gregory
Associate Administrator for
Safety and Mission Assurance

EFFECTIVE DATE:

CONTENTS

PARAGRAPH PAGE

FOREWORD

TABLE OF CONTENTS

LIST OF FIGURES, TABLES, AND APPENDICES

1. SCOPE
1.1 Scope
1.2 Purpose

2. APPLICABLE DOCUMENTS
2.1 General
2.2 Government documents
2.3 Non-government publications

3. DEFINITIONS AND ACRONYMS
3.1 Definitions used in this standard
3.2 Acronyms used in this standard

4. GENERAL REQUIREMENTS
4.1 Personnel Training
4.2 Basic Principles of Oxygen Safe Use
4.3 Warning Systems and Controls
4.4 Safety Reviews
4.5 Waivers

5. PROPERTIES AND HAZARDS OF OXYGEN
5.1 Handling Hazards
5.2 Ignition Mechanisms
5.3 Hazards Analysis
5.4 Oxygen Purity

6. MATERIALS SELECTION
6.1 General
6.2 Materials Control
6.3 Nonmetallic Materials
6.4 Metallic Materials

7. DESIGN PRINCIPLES
7.1 Design Approach
7.2 Design for High-Pressure and High-Temperature Oxygen Systems
7.3 Design for Cryogenic Oxygen Systems
7.4 Code Design Requirements

8. CLEANING
8.1 General

8.2 Cleaning Safety
8.3 Cleaning Procedures
8.4 Clean Assembly of Components and Systems
8.5 Record Keeping

9. OPERATING PROCEDURES
9.1 General Guidelines
9.2 Personnel
9.3 Cooldown and Loading Procedures
9.4 Examinations

10. FACILITY PLANNING AND IMPLEMENTATION
10.1 General
10.2 Hazards and Reviews
10.3 Storage Systems
10.4 Storage Vessels
10.5 Fire Protection Systems for Oxygen-Enriched Environments
10.6 Barricades
10.7 Quantity-Distance Guidelines for Bulk Liquid Storage
10.8 Quantity Distance Guidelines for Bulk Gaseous Oxygen Storage
10.9 Oxygen Detection
10.10 Venting and Disposal Systems

11. TRANSPORTATION
11.1 General
11.2 Transport on Public Thoroughfares
11.3 Transport on Site Controlled Thoroughfares
11.4 Transportation Emergencies

12 EMERGENCY PROCEDURES
12.1 Types of Emergencies
12.2 Emergency Assistance Plans and Procedures
12.3 Fire-Fighting Techniques

APPENDIX A: CHEMICAL AND PHYSICAL PROPERTIES

APPENDIX B: MATERIALS TESTING METHODS AND TEST DATA

APPENDIX C: DESIGN EXAMPLES

APPENDIX D: PRESSURE VESSELS - TESTING, INSPECTION, AND RECERTIFICATION

APPENDIX E: CODES, REGULATIONS, AND GUIDELINES LISTING

APPENDIX F: SCALING LAWS, EXPLOSIONS, BLASTS, AND FRAGMENTS

LIST OF TABLES

5-1 Some Potential Ignition Sources of Fuel-Oxygen Mixtures
5-1 Typical Maximum Allowable Particles for Different Cleaning Levels
10-1 Safe Quantity-Distance Relationships for Liquid-Oxygen Storage (Hazard Group II)

10-2 Liquid Propellant Explosive Equivalents
10-3 Separation Distances for Liquid Hydrogen - LOX Propellant Combination
10-4 Factors for Blast Effects
10-5 Intraline Distances for Liquid Hydrogen - LOX Propellant Combination
10-6 Recommended Distances Between Bulk Gaseous Oxygen Storage and Flammable Gases Stored Aboveground
B-1 Selected Values for Ignition Temperatures of Solids
B-2 Friction Ignition Test Data for Similar Pairs
B-3 Friction Ignition Test Data for Dissimilar Pairs
B-4 Heat of Combustion of Metals and Alloys
B-5 Minimum Oxygen Pressure Required to Support Self-Sustained Combustion of Approximately 15-cm (6-in.) long, 0.32-cm (0.125-in.)-Diameter Rods Ignited at the Bottom
B-6 Polymer Properties Related to Ignition and Combustion
E-1 Federal Regulations for Shipping Oxidizers Interstate

LIST OF FIGURES

5-1 Material Safety Logic
B-la Ignitability of Metals in Supersonic Particle Impact Test with 2000-μ Aluminum Particles in 3900-psi Oxygen (Increases from Top Right to Bottom Left)
B-lb Ignitability of Metals in Supersonic Particle Impact Test with 2000-μ Aluminum Particles in 3900-psi Oxygen (Increases from Top Right to Bottom Left)
C-1 Design Highly Susceptible to Particle Impact Ignition
C-2 Design Showing Minimization of Soft Good Exposure to Pneumatic Impact Ignition
C-3 Design Susceptible to Mechanical Impact Ignition
C-4 Design Minimizing Electrical Arcing
C-5 Design With Sharp Edges
C-6 Designs Showing Various Fitting and Particulate Generation Configurations
C-7 Designs Illustrating Rotating Stem Valve and Particle Generation Configurations
C-8 Contaminant-Entrapping Configurations
C-9 Seal Configuration Reducing Assembly-Generated Contaminants
C-10 Design Resulting in Thin Walls

SAFETY STANDARD FOR OXYGEN AND OXYGEN SYSTEMS

1. SCOPE

1.1 Scope. This standard is a central Agency document containing guidelines for Safely storing, handling, and using oxygen. The information contained in this guide also updates the material and design information in RP-1113 (Bond et al. 1983). Each designer, user, operator, maintainer, and assurance personnel and their designated project managers are responsible for incorporating the requirements of this standard into their projects or facilities.

1.2 Purpose. The purpose of the Oxygen Safety Standard is to provide a practical set of guidelines for safe oxygen use. For the purposes of this guide, oxygen refers to gaseous and liquid oxygen and not to oxygen-enriched mixtures, although many of the same considerations apply. This standard contains chapters on hazards, materials compatibility, design concepts, and cleaning for oxygen service. It also covers various operational issues such as storage facility design, transportation and transfer, equipment hazards, and emergency procedures. The intent of this standard is to provide enough information so that it can be used alone, but at the same time, to reference data sources that can provide much more detail if required. Any information contained herein on hazards and use of oxygen is based on current knowledge and is subject to change as more testing is done or as more information becomes available.

2. APPLICABLE DOCUMENTS

2.1 General. The applicable documents cited in this standard are listed in this section for reference only. The specified technical requirements listed in the body of this document must be met whether or not the source document is listed in this section.

2.2 Government documents.

2.2.1 Specifications, standards, and handbooks. The following specifications, standards, and handbooks form a part of this document to the extent specified herein. Unless otherwise specified, the issuances in effect on date of invitation for bids or request for proposals shall apply.

DEPARTMENT OF DEFENSE

DOD 6055.9	DoD Ammunition and Explosives Safety Standards
MIL-C-81302	Cleaning, Compound, Solvent, Trichlorotrifluoroethane
MIL-O-27210	Oxygen: Aviators Breathing, Liquid and Gas
MIL-P-25508	Propellant, Oxygen
MIL-STD-1246	Product Cleanliness Levels and Contamination Control Program

DEPARTMENT OF TRANSPORTATION

Hazardous Materials Regulations of the Department of Transportation. Interstate Commerce Commission No. 30, Washington, DC

DOT P5800.5 Emergency Response Guidebook

NATIONAL AERONAUTICS AND SPACE ADMINISTRATION

JHB 5322 Contamination Control Requirements Manual. NASA Johnson Space Center, TX

JSC SE-R-0006 NASA JSC Requirements for Materials and Processes. NASA Johnson Space Center, TX

JSC SE-S-0073 NASA JSC/National Space Transport System Specification, Fluid Procurement and Use Control. NASA Johnson Space Center, TX

JSC 02681 Nonmetallic Materials Design Guidelines and Test Data Handbook. Rev. J, NASA Johnson Space Center, TX

KHB 1710.2A(V2) “Safety Operating Procedures, No. 41 - Pressure System Safety.” KSC Safety Practices Handbook, Vol. 2, NASA Kennedy Space Center, FL

KSC-C-123G Specification for Surface Cleanliness of Fluid Systems. NASA Kennedy Space Center, FL (1994).

KSC-SPEC-Z-0003 Welding of Austenitic Stainless Steel, Carbon Steel, Aluminum Alloy, Nickel Alloy and Expansion Alloy Pipe, Tubing, and Associated Fittings. NASA Kennedy Space Center, FL

KSC-SPEC-Z-0004 Welding of Structural Carbon Steel, Low Alloy Steel, Austenitic Stainless Steel and 10509306, 10509308, 76K02415 and 76K02416. Rev. E, NASA Kennedy Space Center, FL

MSFC-HDBK-527/JSC 09604. Materials and Processes Information System (MAPTIS) Data Update. Published periodically by the NASA Marshall Space Flight Center, AL.

MSFC-PROC-1831 The Analysis of Nonvolatile Residue Content Based on ASTM F 331-72. Procedure, NASA Marshall Space Flight Center, AL

MSFC-PROC-1832 The Sampling and Analysis of Nonvolatile Residue Content on Critical Surfaces. Procedure, NASA Marshall Space Flight Center, AL, May (1990).

NHB 1700.1 Basic Safety Manual, Vol. VI-B

NHB 8060.l Flammability, Odor, and Offgassing Requirements and Test Procedures for Materials in Environments That Support Combustion

NHB 8060.1	Flammability, Odor, Offgassing, and Compatibility Requirements and Test Procedures for Materials in Environments that Support Combustion
NHS/IH 1845.2	NASA Health Standard for Entry into and Work in Confined Spaces
NSS 1740.11	NASA Safety Standard for Fire Protection
NSS 1740.12	NASA Safety Standard for Explosives, Propellants, and Pyrotechnics
SE-0-0104	General Specification: NASA JSC Requirements for Flight and Flight Prototype Liquid and High-Pressure Oxygen Components and Systems. Houston, TX

OCCUPATIONAL SAFETY AND HEALTH ADMINISTRATION

CFR Title 29	Occupational Safety and Health Standards. Code of Federal Regulations, Part 1910, Sections 94(d), 104, 114, 115, 252(a), and 252(f)

(Unless otherwise indicated copies of the cited documents are available from the following: Copies of the Department of Transportation documents are available from xxxxxxxxxx. Copies of the Code of Federal Regulations are available from the National Archives and Records Administration at http://www.access.gpo.gov/nara/cfr/index.html. Copies of DoD documents are available from xxxxxxxxxxxx. Copies of NASA documents are available from any NASA Installation library or documentation repository. Copies of the National Transportation Safety Board documents are available from xxxxxxxxx.)

2.2.2 Other Government documents, drawings, and publications. The following documents form a part of this document to the extent specified herein. Unless otherwise specified, the issuances in effect on date of invitation for bids or request for proposals shall apply.

BUREAU OF MINES

Bureau of Mines Report of Investigations 5707	Research on the Hazards Associated with the Production and Handling of Liquid Hydrogen. M. G. Zabetakis and D. S. Burgess, Eds, Bureau of Mines, Pittsburgh, PA (1961).

CODE OF FEDERAL REGULATIONS

CFR Title 49	Transportation. Code of Federal Regulations, Parts 171-179, Sections 171.8, 172.101, 172.700, 173.31, 173.33, 173.34, 173.115, 173.302, 173.306, 173.315, 173.316, 173.318, 173.320, 173.600, 177.840, 178.36, 178.331, 178.337, 178.338

DEPARTMENT OF DEFENSE

AFAPL-TR-73- 74 Kuchta, J. M. Fire and Explosion Manual for Aircraft Accident Investigators, Air Force Propulsion Laboratory, OH, August (1973).

AFAPL-TR-71-93 Kuchta, J. M., R. J. Cata, G. H. Martindill, and I. Spolan. Ignition and Fire Suppression in Aerospace Vehicles. Technical Report, Air Force Propulsion Laboratory, OH (1971).

NATIONAL AERONAUTICS AND SPACE ADMINISTRATION

CR-3023 Baker, W. E., J. J. Kulesz, R. F. Ricker, P. S. Westine, V. B. Parr, I. M. Vargas, and P. K. Moseley. Workbook for Estimating Effects of Accidental Explosions in Propellant Ground Handling and Transport Systems (1978).

CR-54809 Commander, J. C., and M. H. Schwartz. Cooldown of Large-Diameter Liquid Hydrogen and Liquid Oxygen Lines. AGC-8800-54, NASA Contract NAS3-2555, Aerojet General Corp. (1966).

CR-120221 Hust, J. G., and A. F. Clark. A Survey of Compatibility of Materials with High Pressure Oxygen Service. REPT-275.03-72-11, National Bureau of Standards, Washington, DC (1972).

CR-134538 Baker, W. E., V. Parr, R. Bessey, and D. Cox. Assembly and Analysis of Fragmentation Data for Liquid Propellant Vessels. 74N1562 (1974)

CR-134779 Strehlow, R. A., and W. E. Baker. The Characterization and Evaluation of Accidental Explosions. UILU-ENG-75-0503, NASA Grant NSG-3008, Illinois University, IL (1975).

CR-140632 Laurendeau, N. M. The Ignition Characteristics of Metals in Oxygen Atmospheres. TR-851, NASA Grant NGR-31-001-129, Princeton University, NJ (1968).

NMI 1710.3 Safety Program for Pressure Vessels and Pressurized Systems

NSTS 22206 Instructions for Preparation of Failure Modes and Effects Analysis (FMEA) and Critical Items List (CIL)

OMB 0704-0188 Worker Safety, Safety, Hazard, High-Pressure Oxygen. Materials Branch, NASA Goddard Space Flight Center, MD

RP-1113 Bond, A. C., H. O. Pohl, N. H. Chaffee, W. W. Guy, C. S. Allton, R. L. Johnston, and W. L. Castner. Design Guide for High-Pressure Oxygen Systems. NASA Scientific and Technical Information Branch (1983).

SP-3072 Banakitis, H., and C. F. Schueller. “Cleaning Requirements, Procedures, and Verification Techniques.” ASRDI Oxygen Technology Survey: Volume 2, (1972).

SP-3077 Pelouch, J. J., Jr. “Characteristics of Metals That Influence System Safety.” ASRDI Oxygen Technology Survey, Vol. 7, (1974).

SP-3090 Schmidt, H. W., and D. E. Forney. “Oxygen Systems Engineering Review.” ASRDI Oxygen Technology Survey, Vol. 9, (1975).

Special Test Data Report WSTF # 91-24657 to 62 Dees, J. Fire Extinguishant Test., NASA White Sands Test Facility, NM (1992).

SSC 79-0010 Required Materials Used in LOX/GOX Service. NASA Stennis Space Center, MS, October (1989)

TM X-985 Key, C. F., and W. A. Riehl. Compatibility of Materials with Liquid Oxygen. NASA Marshall Space Flight Center, AL (1964).

TM X-53533 Key, C. F. Compatibility of Materials with Liquid Oxygen, III, NASA Marshall Space Flight Center, AL (1966).

TM X-64711 Key, C. F. Compatibility of Materials with Liquid Oxygen. Vol. 1, NASA Marshall Space Flight Center, AL (1972): pp. I.5.

TM X-67201 Kimzey, J. H. Review of Factors Affecting Ignition of Metals in High Pressure Oxygen Systems. (1970).

TN D-182 Reynolds, W. C. Investigation of Ignition Temperatures of Solid Metals, NASA (1959).

TP-WSTF-695 Bamford, L. Guide for Oxygen Components Verification Tests, NASA White Sands Test Facility, NM, August (1992).

TR-276-001 and supplement Stoltzfus, J. M., and J. S. Stradling. Atmospheric Revitalization Pressure Control Subsystem (ARPCS) Oxygen Verification and Certification Tests, NASA White Sands Test Facility, NM (1980).

TR-287-001 Stoltzfus, J. M., J. Anderson, and J. S. Stradling. Extravehicular Mobility Unit (EMU) and Portable Oxygen System (POS) Oxygen Compatibility Tests. NASA White Sands Test Facility, NM (1981).

TR-650-001 Sircar, S. Evaluation of Fire Extinguishants for Space Station Freedom. WSTF Technical Report, NASA White Sands Test Facility, NM (1992).

WSTF-IR-91-005 Shelley, R. M. Ignition of Inconel 718 by Buna N Contamination. WSTF Investigative Report, NASA White Sands Test Facility Laboratories Office, NM (1991).

WSTF Nos. 93-27434 and 93-27435 Bannister, W. Evaluation of LOX/MMH Mixing Special Test Data Report. NASA White Sands Test Facility, NM, March (1994).

Benz, F. J. Summary of the Metals Ignition Study. Steering Group meeting held at WSTF on April 12-13 (1984).

Benz, F. J., C. V. Bishop, and M. D. Pedley. Ignition and Thermal Hazards of Selected Aerospace Fluids, NASA White Sands Test Facility, NM (1988).

Dees, J., and J. Peterson. “Selection of Materials for Bearing Applications in Oxygen.” Proceedings of Advanced Earth-to-Orbit Propulsion Technology 1992, NASA Marshall Space Flight Center, AL, May 19-21 (1992).

Sprenger, R. H. The Effects of Surface Contaminants on the Ignition Susceptibility of 6061 T6 Aluminum when Subjected to Mechanical Impact in Oxygen. NASA White Sands Test Facility, NM (1975).

Thomas, W. “Oxygen Propellant.” Lewis Safety Manual, Chapter 5, NASA Lewis Research Center, OH (1992).

NATIONAL TRANSPORTATION SAFETY BOARD

NTSB-STS-71-1. Risk Concepts in Dangerous Goods Transportation Regulations. Special Study, National Transportation Safety Board, Washington, DC (1971)

(Unless otherwise indicated, copies of the above documents are available as follows: Copies of the Bureau of Mines documents are available from xxxxxxxxxxx. Copies of the Code of Federal Regulations are available from the National Archives and Records Administration at http://www.access.gpo.gov/nara/cfr/index.html. Copies of DoD documents are available from xxxxxxxxxxxx. Copies of NASA documents are available from any NASA Installation library or documentation repository. Copies of the National Transportation Safety Board documents are available from xxxxxxxxx.)

2.3 Non-Government publications. The following documents form a part of this document to the extent specified herein. Unless otherwise specified, the issuances in effect on date of invitation for bids or request for proposals shall apply.

2.3.1 Specifications, standards, and Handbooks.

AMERICAN NATIONAL STANDARDS INSTITUTE

ANSI/ASME B31.3 Chemical Plant and Petroleum Refinery Piping.” American National Standard Code for Pressure Piping, American National Standards Institute/American Society of Mechanical Engineering, New York, NY

ANSI/ASME B31.10 "Cryogenic Piping Systems." American National Standard Code for Pressure Piping, American National Standards Institute/American Society of Mechanical Engineering, New York, NY (1986)

ANSI/ASQC Z1.4 Sampling Procedures and Tables For Inspection by Attributes. American National Standards Institute/American Society for Quality Control, New York, NY

AMERICAN SOCIETY OF MECHANICAL ENGINEERS

Boiler and Pressure Vessel Code, Sect. VIII, Div. 2 "Alternative Rules"

Boiler and Pressure Vessel Code, Sect. VIII, Div. 1 "Pressure Vessels

Boiler and Pressure Vessel Code, Sect. IX "Qualification Standard for Welding and Brazing Procedures, Welders, Brazers, and Welding and Brazing Operators"

AMERICAN SOCIETY FOR TESTING AND MATERIALS

ASTM G 63 Standard Guide for Evaluating Nonmetallic Materials for Oxygen Service. Annual Book of ASTM Standards

ASTM G 88 Standard Guide for Designing Systems for Oxygen Service. Annual Book of ASTM Standards, Sect. 14, Vol. 14.02

ASTM G 93 Standard Practice for Cleaning Methods for Materials and Equipment Used in Oxygen-Enriched Environments. Annual Book of ASTM Standards, Sect. 14, Vol. 14.02

ASTM G 94 "Standard Guide for Evaluating Metals for Oxygen Service." Fire Hazards in Oxygen Systems: ASTM Standards Technology Training Coursebook, B. L. Werley, Ed., ASTM Committee G-4.05

COMPRESSED GAS ASSOCIATION

CGA 341 Standard for Insulated Cargo Tank Specifications for Cryogenic Liquids. Third Ed.

CGA G-4.0 Oxygen. Eighth Ed.

CGA G-4.1 Cleaning Equipment for Oxygen Service. Eighth Ed.

CGA G-4.4 Industrial Practices for Gaseous Oxygen Transmission and Distribution Piping Systems. Second Ed.

CGA S-1.2 "Cargo and Portable Tanks for Compressed Gases." Pressure Relief Device Standards: Part 2

NATIONAL FIRE PROTECTION ASSOCIATION

	Fire Protection Handbook Sixteenth Ed., A. E. Cote and J. L. Linville, Eds.
NFPA 15	Water Spray Fixed Systems for Fire Protection
NFPA 50	Standard for Bulk Oxygen Systems at Consumer Sites
NFPA 53	Fire Hazards in Oxygen-Enriched Atmospheres
NFPA 68	Guide for Explosion Venting (1978): p. 106.
NFPA 70	National Electric Code
NFPA 99	Standard for Health Care Facilities
NFPA 99B	Standard for Hypobaric Facilities
NFPA 220	Standard on Types of Building Construction

(Unless otherwise indicated copies of the listed documents can be obtained as follows: Copies of American National Standards Institute documents are available as listed. Copies of American Society of Mechanical Engineers documents are available from the American Society for Mechanical Engineering, New York, NY. Copies of the American Society for Testing and Materials documents are available from the American Society for Testing Materials, Philadelphia, PA. Copies of Compressed Gas Association documents are available from the Compressed Gas Association, Inc., Arlington, VA. Copies of National Fire Protection Association documents are available from the National Fire Protection Association, Quincy, MA.)

2.3.2 Other Non-Government documents, drawings, and publications.

AMERICAN SOCIETY FOR TESTING AND MATERIALS

ASTBA No. 244	Lucas, W. R., and W. A. Riehl. ASTM Bulletin. February (1960): pp. 29-34.
STP 812	Flammability and Sensitivity of Materials in Oxygen-Enriched Atmospheres: B. L. Werley, Ed. (1983)

Bryan, C. J. “NASA Mechanical Impact Testing in High-Pressure Oxygen": Second Volume, pp. 9-42

Ikeda, G. K. “Oxygen Index Tests to Evaluate the Suitability of a Given Material for Oxygen Service": First Volume, pp. 56-67.

Jenny, R., and H. Wyssmann. “Friction-Induced Ignition in Oxygen.” pp. 38-58.

Lowrie, R. “Heat of Combustion and Oxygen Compatibility.” First Volume: pp. 84-96.

STP 910 Flammability and Sensitivity of Materials in Oxygen-Enriched Atmospheres: Second Volume, M. A. Benning, Ed. (1986)

Benning, M. A., and B. L. Werley. “The Flammability of Carbon Steel as Determined by Pressurized Oxygen Index Measurements.” pp. 153-170

Benz, F. J., and J. M. Stoltzfus. “Ignition of Metals and Alloys in Gaseous Oxygen by Frictional Heating.” pp. 38-58.

Benz, F. J., R. E. Williams, and D. Armstrong. “Ignition of Metals and Alloys by High-Velocity Particles.” pp. 16-37.

Bryan, C. J., and R. Lowry. “Comparative Results of Autogenous Ignition Temperature Measurements by ASTM G 72 and Pressurized Scanning Calorimetry in Gaseous Oxygen.” pp. 108-117.

Gilbertson, J. A., and R. Lowrie. “Threshold Sensitivities of Tests to Detect Oil Film Contamination in Oxygen Equipment.” pp. 204-211.

STP 986 Flammability and Sensitivity of Materials in Oxygen-Enriched Atmospheres: Third Volume, D. W. Schroll, Ed. (1988)

Barthelemy, H., and G. Vagnard. “Ignition of PTFE-lined Hoses in High Pressure Oxygen Systems: Test Results and Considerations for Safe Design and Use.” pp. 289-304.

McIlroy, K., R. Zawierucha, and R. F. Drnevich. “Promoted Ignition Behavior of Engineering Alloys in High-Pressure Oxygen.” pp. 85-104.

Moffett, G. E., M. D. Pedley, N. Schmidt, R. E. Williams, D. B Hirsch, and F. J. Benz. “Ignition of Nonmetallic Materials by Impact of High-Pressure Gaseous Oxygen.” pp. 218-232.

Stoltzfus, J. M., J. M. Homa, R. E. Williams, and F. J. Benz. “ASTM Committee G-4 Metals Flammability Test Program: Data and Discussion.” pp. 28-53.

Swindells, I., P. F. Nolan, and R. K. Wharton. “Spontaneous Ignition Temperatures of Nonmetals in Gaseous Oxygen.” pp. 206-217.

Werley, B. L.. “An Oxygen Index Update.” pp. 248-261.

Williams, R. E., F. J. Benz, and K. McIlroy. “Ignition of Steel by Impact of Low-Velocity Iron/Inert Particles in Gaseous Oxygen.” pp. 72-84.

STP 1040 Flammability and Sensitivity of Materials in Oxygen-Enriched Atmospheres: Fourth Volume, J. M**.** Stoltzfus, F. J. Benz, and J. S. Stradling, Eds. (1989)

Barthelemy, H., G. Dlode, and G. Vagnard. “Oxygen Compatibility of Pressure Regulators for Gas Cylinders.” pp. 267-287.

Christianson, R. C., and B. A. Plante. “Design of an Ignition-Resistant, High-Pressure, High-Temperature Oxygen Valve.”

Janoff, D., L. J. Bamford, B. E. Newton, and C. J. Bryan. “Ignition of PTFE-Lined Flexible Hoses by Rapid Pressurization with Oxygen.”

Lockhart, B. J., M. D. Hampton, and C. J. Bryan. “The Oxygen Sensitivity/Compatibility of Several Materials by Different Test Methods.” pp. 93-105.

Moffett, G. E., N. E. Schmidt, M. D. Pedley, and L. J. Linley. “An Evaluation of the Liquid Oxygen Mechanical Impact Test.” Volume, pp. 11-22.

STP 1111 Hirsch, D. B., R. L. Bunker, and D. Janoff. “Effects of Oxygen Concentration, Diluents, and Pressure on Ignition and Flame-Spread Rates of Nonmetals.” Flammability and Sensitivity of Materials in Oxygen-Enriched Atmospheres: Fifth Volume, J. M. Stoltzfus and K. McIlroy, Eds, (1991).

STP 1111 Flammability and Sensitivity of Materials in Oxygen-Enriched Atmospheres: Fifth Volume, J. M. Stoltzfus and K. McIlroy, Eds. (1991).

Reed, R. P., N. J. Simon, and J. R. Berger. “Influence of Specimen-Absorbed Energy in LOX Mechanical-Impact Tests.”

Stoltzfus, J. M., R. Lowrie, and M. V. Gunaji. “Burn Propagation Behavior of Wire Mesh Made from Several Alloys.”

STP 1197 Flammability and Sensitivity of Materials in Oxygen-Enriched Atmospheres. Sixth Volume, J. M. Stoltzfus and D. Janoff, Eds. (1993).

Schadler, J. L., and J. M. Stoltzfus. “Pressurized Flammability Limits of Selected Sintered Filter Materials in High-Pressure Gaseous Oxygen.”

Shelley, R. M., R. C. Christianson, and J. M. Stoltzfus. “Evaluation of Buna N Ignition Hazard in Gaseous Oxygen.”

ASSOCIATION OF AMERICAN RAILROADS

Bureau of Explosives. Emergency Handling of Hazardous Materials in Surface Transportation. Hazardous Materials Systems

BATTELLE MEMORIAL INSTITUTE

AMRL-TDR-62-102 Baum, J. V., B. Goobich, and T. M. Trainer. An Evaluation of High-Pressure Oxygen Systems, (1962).

CHEMICAL PROPULSION INFORMATION AGENCY

CPIA-PUBL-394-VOL-1 Hannum, J. A. E., Ed. “Safety, Health and the Environment.” Hazards of Chemical Rockets and Propellants, Vol. 1, (1984a)

CPIA-PUBL-394-VOL-2 Hannum, J. A. E., Ed. “Solid Propellants and Ingredients.” Hazards of Chemical Rockets and Propellants, Vol. 2, (1984b)

CPIA-PUBL-394-VOL-3 Hannum, J. A. E., Ed. “Liquid Propellants.” Hazards of Chemical Rockets and Propellants, Vol. 3, (1985)

COMPRESSED GAS ASSOCIATION

Oxygen Compressors and Pumps Symposium (1971)

McKinley, C. “Experimental Ignition and Combustion of Metals.” Oxygen Compressors and Pumps Symposium (1971): pp. 27-34.

Docket No. HM-115, Notice 74-3 Comments and Views of Compressed Gas Association, Inc. Cryogenic Liquids, (1985)

SOUTHERN RESEARCH INSTITUTE

SORI-EAS-76-320 Bates, C. E. Determine and Assess the State of the Art of High Pressure, Centrifugal Oxygen Compressors, (1976).

OTHER

Bahk, S., D. Chavez, B. Emery, and B. Wilson. “Protecting Aluminum Alloy From Particle-Impact Ignition With an AL2O3 Film.” Presented at the 1992 Impact Symposium, Austin, TX (1992).

Bauer, H., W. Wegener, and K. F. Windgassen. “Fire Tests on Centrifugal Pumps for Liquid Oxygen.” Cryogenics, Vol. 10, No. 3, June (1970): pp. 241-248.

Hilado, C. J. Flammability Handbook for Plastics. Third Ed.: Technomic Publishing (1982).

Kindwall, E. P., M.D. Medical Aspects of Commercial Diving and Compressed-Air Work. Occupational Medicine, Third Ed., C. Zenz, M.D., B.O. Dickerson, M.D., and E. P. Horvath, Eds., (1994): pp. 344, 345.

Kuo, K. K. Principles of Combustion. New York: John Wiley and Sons, Inc. (1986).

Lapin, A. “Oxygen Compatibility of Materials.” Bull. Inst. Int. Froid, Annex, No. 1 (1973): pp. 79-94.

Lawrence, W. E., and E. E. Johnson. “Design for Limiting Explosion Damage.” Chemical Engineering, Vol. 81, No. 1, January (1974): pp. 96-104.

Lewis, B., and G. von Elbe. Combustion, Flames, and Explosions of Gases. Second Ed., New York: Academic Press (1961).

Liebenberg, D. H., J. K. Novak, and F. J. Edeskuty. Cooldown of Cryogenic Transfer Systems. AIAA Paper 67-475, American Institute of Aeronautics and Astronautics, New York, NY, July (1967)

Lipsett, M. J., D. J. Shusterman, and R. R. Beard. “Inorganic Compounds of Carbon, Nitrogen, and Oxygen.” Patty’s Industrial Hygiene and Toxicology, Fourth Ed., Vol. II, Part F, G. D. Clayton and F. E. Clayton, Eds., New York: John Wiley and Sons, Inc. (1994): pp. 4597-4604.

Moore, C. V. “The Design of Barricades for Hazardous Pressure Systems.” Nuclear Engineering Design, Vol. 5 (1967): pp. 81-97.

National Academy of Sciences. Pressure-Relieving Systems for Marine Cargo Bulk Liquid Containers. Committee on Hazardous Materials, National Research Council, Washington, DC (1973).

Phillips, B. R. Resonance Tube Ignition of Metals. Ph.D. Thesis, University of Toledo, OH (1975)

Potts, A. M. “Toxic Responses of the Eye.” Toxicology The Basic Science of Poisons, Fourth Ed., M. O. Amdur, J. Doull, and C. D. Kiassen, Eds., New York: Pergamon Press (1991).

Solomon, K. A., M. Rubin, and D. Krent. On Risks from the Storage of Hazardous Chemicals. UCLA-ENG-76125, December (1976). (Available from NTIS as PB-265115/6.)

Stull, D. R. "Fundamentals of Fire and Explosion." AIChE Monograph Series, Vol. 73, No. 10 (1977).

Tack, W. T., D. K. McNamara, J. M. Stoltzfus, and S. Sircar. "Aluminum-Lithium Alloys: Mechanical Property and Composition Effects on Liquid Oxygen Compatibility."

Weber, U. "Explosions Caused by Liquid Oxygen." United Kingdom Atomic Energy Authority translation, translated by R.A. Slingo, Harwell, Berkshire (1966).

(Unless otherwise indicated copies of the listed documents can be obtained as follows: Copies of the American Society for Testing and Materials documents are available from the American Society for Testing Materials, Philadelphia, PA. Copies of American Association of American Railroads documents are available from , Association of American Railroads, Washington, DC. Copies of Battelle Memorial Institute documents are available from the Battelle Memorial Institute, Columbus, OH. Copies of Chemical Propulsion Information Agency documents are available from Johns Hopkins University, Baltimore, MD. Copies of Compressed Gas Association documents are available from the Compressed Gas Association, Inc., Arlington, VA. Copies of the Southern Research Institute are available from the Southern Research Institute, AL.)

2.4 Order of precedence. Where this document is adopted or imposed by contract on a program or project, the technical guidelines of this document take precedence, in case of conflict, over the technical guidelines cited in other referenced documents.

3. DEFINITIONS AND ACRONYMS

3.1 Definitions used in this standard

3.1.1 Acceptance Test. A standard test that leads to certification of a component or system.

3.1.2 Adiabatic. A process by which the system changes state without thermal energy exchange between the system and the surroundings.

3.1.3 Adiabatic Compression. Mechanical work transferred to a system, where the energy goes into increasing the internal energy of the material for a static system or increasing the enthalpy for a dynamic system. If the process is also reversible (in the thermodynamic definition), this change is also isentropic.

3.1.4 Autoignition. The phenomenon in which a mixture of gases, vapors, mists, dusts, or sprays ignites spontaneously with no external ignition source. It is frequently called "autogenous ignition" or "spontaneous ignition."

3.1.5 Autoignition Temperature (AIT). The lowest temperature at which material will spontaneously ignite (autogenous ignition).

3.1.6 Blast Wave. A shock wave in air, which has degenerated as the shock front becomes less dense.

3.1.7 Blast Yield. Energy released in an explosion, inferred from measurements of the characteristics of the blast waves generated by the explosion.

3.1.8 Buddy System. A system used in hazardous operations where one person performs the necessary task while another person standing nearby is fully prepared (clothing, training, etc.) to remove the primary person from the area in case of incapacitation.

3.1.9 Burn Velocity. The velocity of propagation of a flame through a flammable material. Burn velocities are absolute velocities measured relative to the velocity of the unburned material; flame speeds are measured in laboratory coordinates and are not absolute.

3.1.10 Burst Pressure. The pressure at which a gas storage vessel or burst disk bursts or fails.

3.1.11 Cargo Tank. Any container designed to be permanently attached to any motor vehicle or other highway vehicle and in which any compressed gas is to be transported. The term “cargo tank” does not include any tank used solely to supply fuel for the vehicle or containers fabricated for cylinders.

3.1.12 Catstrophic Failure. One that causes complete and irreparable loss of function of a component or system. Structural failure of a pressure vessel is a catastrophic failure.

3.1.13 Certification. The documentation that qualifies a vessel or system to operate in the intended service.

3.1.14 Cleanliness Level. An established maximum of allowable contaminants based on sized distribution, or quantity on a given area or in a specific volume. Also, an absence of particulate and nonparticulate matter visible under visible light and/or UV illumination.

3.1.15 Cold Injury. An injury caused by freezing of skin tissue caused by exposure to a very cold atmosphere, surface, or cryogenic. Also referred to as a “cryogenic burn.”

3.1.16 Combustible Liquid. A liquid with a flash point at or above 333˚ K (1400˚ F).

3.1.17 Combustible Solid. A solid that can burn in the presence of an oxidizer.

3.1.18 Confined Spaces. A confined space is not normally occupied by personnel. It has limited or restricted openings for entry and exit, may lack adequate ventilation, and may contain or produce “dangerous air contamination;” therefore, it may not be safe for entry.

3.1.19 Contaminant. A foreign substance that can have deleterious effects on system operation, life, or reliability.

3.1.20 Critical Surface. A surface that requires precision cleaning.

3.1.21 Cryogen. Substances which boil at extremely low temperatures, usually at or below -150°C.

3.1.22 Cryogenic Propellants. Propellants that are gases at ambient temperature and pressure, but have been liquified by chilling to or below -150°C and pressurization.

3.1.23 Earth-Storable Propellants. Propellants that are in the liquid or solid state at ambient temperature and pressure.

3.1.24 Electrical Arc/Spark Test. In this test, an electrical arc or spark is used to determine the susceptibility of materials to ignition in oxygen. Arc energy input and oxygen pressure are the major variables.

3.1.25 Explosion. The rapid equilibration of pressure between the system and the surroundings. The pressure of the gas is dissipated as a shock wave. Explosions may occur through mechanica failure of vessels containing high-pressure fluids or through rapid chemical reactions producing large volumes of hot gases.

3.1.26 Explosive. Any chemical compound or mechanical mixture that when ignited, undergoes a very rapid combustion or decomposition releasing large volumes of heated gases that exert pressure on the surrounding medium.

3.1.27 Explosive Yield. Energy released in an explosion. It is often expressed as a percent or fraction of the energy that would be released by the same mass of a standard high explosive such as TNT.

3.1.28 Failure Mode and Effects Analysis (FMEA). A systematic, methodical analysis performed to identify and document all identifiable failure modes at a prescribed level and to specify the resultant effect of the modes of failure.

3.1.29 Fire Resistant. Materials that will resist burning when contacted by fuels or oxidizers, but will eventually burn after continuous contact and exposure to an ignition source.

3.1.30 Flammable Liquid. Any liquid with a flash point below 300 K (80 °F) as determined by standard methods (ASTM D 56 1985; ASTM D 92 1985*).*

3.1.31 Flash Point. The lowest temperature, corrected to 101.3 kPa (1.00 atm), at which an ignition source under specified conditions, causes the material vapor to ignite momentarily.

3.1.32 Failure Rate. The number of failures of an item per unit measure of use (cycles, time, miles, events, etc., as applicable for the item).

3.1.33 Flow Capacity. The flow capacity of a pressure-relief device is determined at the flow rating pressure, expressed in cubic feet per minute of free air discharge.

3.1.34 Fragmentation. The breaking up of the confining material when an explosion takes place. Fragments may be complete items, subassemblies, pieces of material, or pieces of equipment or buildings containing the flame.

3.1.35 Geysering. Geysering occurs in vertical systems with a tank and a long feedline from the tank filled with cryogenic oxygen. Heat transfer into the line causes gas bubbles to form and begin rising in the line. As the bubbles rise, they coalesce to form larger bubbles. In a line long with respect to its diameter, the result is an expanding vapor bubble of sufficient size to expel

the liquid above it into the tank with a force large enough at times to rupture the tank or to damage internal tank components such as baffles, screens, or level sensors. When the liquid subsequently reenters the line, it can cause large water hammer forces with accompanying system damage.

3.1.36 Hazard. A situation (or potential event) that may result in death or injury to personnel, or damage to equipment. It includes the effects of fire, flash, explosion, shock, concussion, fragmentation corrosion or toxicity.

3.1.37 Hazards Analysis A process that analyzes all possible ignition sources and the flammability of all materials present.

3.1.38 Hazardous Chemical. Any chemical hazardous by nature (corrosive, flammable, radioactive, toxic, etc.).

3.1.39 Heat of Combustion/Heat of Reaction. The difference in the enthalpy of the products and the enthalpy of reactants for a given temperature and pressure.

3.1.40 High Pressure. NMI 1710.3C (1991) indirectly defines high-pressure systems as those with pressures greater than or equal to 1 MPa (150 psi).

3.1.41 Hyrostatic Test. A test performed on a pressure vessel or system in which the vessel or system is filled with a liquid (usually water) and pressurized to a designated level as prescribed in the applicable code.

3.1.42 Ignition Energy. The energy required to initiate flame propagation through a flammable mixture. The minimum ignition energy is the minimum energy required to ignite a particular flammable mixture at a specified temperature and pressure.

3.1.43 Ignition Temperature. The temperature required to ignite a substance.

3.1.44 Maximum Allowable Stress Value. The maximum unit stress permissible for a specific material, used in the design formulas.

3.1.45 Maximum Allowable Working Pressure (MAWP). The maximum allowable operating pressure rating of pressure vessels manufactured and operated in accordance with ASME VIII (ASME 1986).

3.1.46 Maximum Use Pressure. The maximum pressure to which a material or system can be subjected, based on reasonably foreseeable malfunctions, operation errors, or process upsets.

3.1.47 Noncombustible Material . A material (as defined in NFPA 220 1985), which, in the form and under the conditions anticipated, will not ignite, burn, support combustion, or release flammable vapors when subjected to fire or heat. Materials reported as noncombustible, when tested in accordance with ASTM E 136-79 (1985), shall be considered noncombustible materials.

3.1.48 Net Positive Suction Pressure (NPSP). That pressure (above atmospheric) that must be supplied to the suction side of a turbopump to prevent cavitation.

3.1.49 Nonmetal . Any material not containing metal, such as polymers. However, for the purposes of this document, “nonmetal” does not include ceramics, although they are classified as nonmetals.

3.1.50 Operating or Working Temperature. The temperature maintained in the part under consideration during normal operation.

3.1.51 Operating Pressure. The pressure of a vessel at which it normally operates. This pressure must not exceed the maximum allowable working pressure.

3.1.52 Overpressure. A blast wave above atmospheric pressure, resulting from an explosion. Overpressures are expressed as absolute pressures (kPa or psia), or as the increase in pressure above ambient (kPa or psig).

3.1.53 Oxygen Deficiency. An atmosphere containing oxygen at a concentration of less than 19.5 volume percent as measured by an oxygen-measuring device.

3.1.54 Oxygen-Enriched. Several definitions of oxygen-enrichment are found in the literature. Oxygen-enriched atmospheres have been specified for oxygen concentrations greater than 21 volume percent (NFPA 53 1994), 23.5 volume percent (29 CFR 1910.146 1986), and 25 volume percent or a partial pressure of oxygen (PO_2) equal to or greater than 190 mm Hg under ambient pressure (ASTM G 63-92 1992). Oxygen-rich atmospheres expand the range of flammability, lower the ignition energy, and cause combustible materials to burn violently when ignited.

3.1.55 Oxygen Index. Minimum concentration of oxygen in an ascending flow of oxygen and nitrogen at one atmosphere pressure that will just sustain combustion of a top-ignited, vertical test specimen (ASTM D 2863 1991).

3.1.56 Oxygen Manifold, High-Pressure. A manifold connecting oxygen containers, having a DOT service pressure exceeding 250 psig (1.7 MPa).

3.1.57 Oxygen Manifold, Low-Pressure. A manifold connecting oxygen containers, having a DOT service pressure not exceeding 250 psig (1.7 MPa).

3.1.58 Particulate. A finely divided solid of organic or inorganic matter, including metals. These solids are usually reported as the amount of contaminant, by the number of a specific micrometer size present.

3.1.59 Pneumatic Test. A test performed on a pressure vessel or system in which air or gas is introduced and pressurized to a designated level as prescribed in the applicable code.

3.1.60 Portable Tanks/Containers. Any tank or container as defined by the DOT, designed primarily to be temporarily attached to a motor vehicle, other vehicle, railroad car other than tank car, or marine vessel, and equipped with skids, mountings, or accessories to facilitate mechanical handling of the container, in which any compressed gas is to be transported in.

3.1.61 Precision Cleaning. Final or fine cleaning accomplished in a controlled environment to achieve some cleanliness level.

3.1.62 Precision Cleanliness. A degree of cleanliness that requires special equipment and techniques for determination. Precision cleanliness levels normally include limits for particulate size and quantities.

3.1.63 Precleaning. All cleaning activities and procedures required to prepare items for precision cleaning.

3.1.64 Pressure Vessel. Any certified vessel used for the storage or handling of gas or liquid under positive pressure.

3.1.65 Promoters. Devices such as igniters, which by burning are intended to cause ignition of an adjacent surface.

3.1.66 Proof Test. A pressure test performed to establish the maximum allowable working pressure of a vessel, system, or component thereof: (1) when the strength cannot be computed with satisfactory accuracy; (2) when the thickness cannot be determined by means of the design rule of the applicable code or standard; or (3) when the critical flaw size to cause failure at the certified pressure cannot be identified by other nondestructive test methods.

3.1.67 Propellant. Fuels and oxidizers used in jet and rocket engines. When ignited in a combustion chamber, the propellants change into gases with a large increase in pressure, thus providing the energy for thrust.

3.1.68 PV Product. The product required for ignition (where P is the normal load divided by the rubbing area and v is the relative linear velocity between the samples). Determined by a frictional heating test.

3.1.69 Pyrolysis. The chemical decomposition of a material by thermal energy.

3.1.70 Radiant Heat. Heat that requires no medium to travel through, unlike conduction (direct and contact) or convection (transport of heat by fluid movement).

3.1.71 Recertification. The procedure by which a previously certified vessel or system, by appropriate tests, inspections, examinations, and documentation, is qualified to continue or be returned to operations at the designed pressure.

3.1.72 Risk. The likelihood of occurrence of a specific consequence or loss, caused by faults or failures, or external events. For example, the number of fatalities deriving from possible failures in a given hazardous activity is the risk. When qualified, risk is often also used to mean the product of the likelihood, expressed as a probability, and the magnitude of a given loss, or the sum of such products over all possible losses, in other words, the expected loss. Individual risk is the probability of a given consequence (such as a fatality) occurring to any member of the exposed population. Group or social risk is the probability that a given number of individuals will suffer a given consequence.

3.1.73 Risk Assessment. Estimation of the potential severity of a hazard, and a determination of probability of that hazard contributing to a mishap (similar to the OSHA classification system).

3.1.74 Risk Management. The management of risks by identifying their sources, evaluating the magnitudes and likelihoods of their potential consequences and possible losses,

and making decisions on their acceptability or need for mitigation. If mitigation needs to be made, the process includes defining and evaluating alternative mitigating measures, selecting the measures for implementation, and assuring that the selected measures provide the results intended.

3.1.75 Safety Factor. The ratio, allowed for in design, between the ultimate breaking strength of a member, material, structure, or equipment and the actual working stress or safe permissible load placed on it during ordinary use.

3.1.76 Set Pressure. The pressure marked on a safety relief valve at which system relief pressure begins.

3.1.77 Shock Sensitivity. The ease with which a material may be ignited by a mechanical impact, producing a deflagration and/or detonation.

3.1.78 Single-Point Failure. A single item or component that will cause an undesiredevent by failing.

3.1.79 Situationally Flammable. A material that is flammable in oxygen in the use configuration and conditions (for example, temperature and pressure).

3.1.80 Storage Container. Any container designed to be permanently mounted on a stationary foundation and used to store any compressed gas.

3.1.81 System Safety Program Plan (SSPP). A description of the methods to be used by the contractor to implement the tailored requirements of a standard, including organizational responsibilities, resources, methods of accomplishment, milestones, depth of effort, and integration with other program engineering and management activities and related systems.

3.1.82 Tank. Any vessel used for the storage or handling of liquids where the internal pressure depends only on liquid head or a combination of liquid head and vapor pressure.

3.1.83 Vapor Explosion. The sudden vaporization of a superheated liquid, which can produce a shock wave.

3.2 Acronyms used in this standard

3.2.1	AAR	American Association of Railroads
3.2.2	AGA	American Gas Association
3.2.3	AIChE	American Institute of Chemical Engineers
3.2.4	AIHA	American Industrial Hygiene Association
3.2.5	AIT	Autoignition Temperature
3.2.6	Al	Aluminum
3.2.7	$A1_2O_3$	Aluminum oxide

3.2.8	ANSI	American National Standards Institute
3.2.9	API	American Petroleum Institute
3.2.10	ASHRAE	American Society of Heating, Refrigeration, and Air Conditioning
3.2.11	ASME	American Society of Mechanical Engineers
3.2.12	ASRDI	Aerospace Safety Research and Data Institute
3.2.13	ASTM	American Society for Testing and Materials
3.2.14	BCL	Battelle Columbus Laboratories
3.2.15	BM	Bureau of Mines
3.2.16	CDR	Critical Design Review
3.2.17	CFC	Chlorofluorocarbons
3.2.18	CFR	Code of Federal Regulations
3.2.19	CGA	Compressed Gas Association
3.2.20	CHEMTREC	Chemical Transportation Emergency Center
3.2.21	CPIA	Chemical Propulsion Information Agency
3.2.22	CTFE	chlorotrifluoroethylene
3.2.23	Cr	Chromium
3.2.24	Cr_2O_3	Chromium Oxide
3.2.25	DI	Deionized
3.2.26	DOD	Department of Defense
3.2.27	DODESB	Department of Defense Explosives Safety Board
3.2.28	DOE	Department of Energy
3.2.29	DOT	Department of Transportation
3.2.30	EMU	Extravehicular Mobility Unit
3.2.31	EPR	Emergency Procedures Review
3.2.32	FAA	Federal Aviation Administration

3.2.33 FeO	Iron Oxide
3.2.34 FEP	Fluorinated Ethylene Propylene
3.2.35 FMEA	Failure Modes and Effects Analysis
3.2.36 FMEA/CIL	Failure Modes and Effects Analysis/Critical Item List
3.2.37 GOX	Gaseous Oxygen
3.2.38 GN_2	Gaseous Nitrogen
3.2.39 HCFC	Hydrochlorofluorocarbon
3.2.40 HMRB	Hazardous Materials Regulation Board
3.2.41 IEEE	Institute of Electrical and Electronic Engineering
3.2.42 IPA	Isopropyl alcohol
3.2.43 JSC	Johnson Space Center
3.2.44 KSC	Kennedy Space Center
3.2.45 LANL	Los Alamos National Laboratory
3.2.46 LeRC	Lewis Research Center
3.2.47 LOI	Limiting Oxygen Index
3.2.48 LOX	Liquid Oxygen
3.2.49 MAPTIS	Materials and Processes Test Information System
3.2.50 MAWP	Maximum Allowable Working Pressure
3.2.51 MCA	Manufacturers' Chemists Association
3.2.52 M&P	Materials and Processes
3.2.53 MSDS	Material Safety Data Sheet
3.2.54 MSFC	Marshall Space Flight Center
3.2.55 MSS	Manufacturers' Standardization Society
3.2.56 NBS	National Bureau of Standards (this organization is now the National Institute of Standards and Technology (NIST))
3.2.57 NEMA	National Electrical Manufacturer's Association

3.2.58	NFPA	National Fire Protection Association
3.2.59	NHB	NASA Handbook
3.2.60	NHS	NASA Health Standard
3.2.61	NiO	Nickel Oxide
3.2.62	NMI	NASA Management Instruction
3.2.63	NSS	NASA Safety Standard
3.2.64	NSTS	National Space Transportation System
3.2.65	NTP	Normal Temperature and Pressure
3.2.66	NTSB	National Transportation Safety Board
3.2.67	OHM	Office of Hazardous Materials
3.2.68	ORI	Operational Readiness Inspection
3.2.69	OSHA	Occupational Safety and Health Administration
3.2.70	PDR	Preliminary Design Review
3.2.70	PTFE	Polytetrafluoroethylene (Teflon ®)
3.2.72	QA	Quality Assurance
3.2.73	RP-1	Kerosene
3.2.74	S&A	Safe and Arm
3.2.75	SiO_2	Silicone Oxide
3.2.76	SOP	Standard Operating Procedure
3.2.77	SR	Safety Review
3.2.78	SRM	Solid Rocket Motor
3.2.79	SRM&QA	Safety, Reliability, Maintainability & Quality Assurance
3.2.80	SSA	System Safety Analysis
3.2.81	SSA/SR	System Safety Analysis/Safety Review
3.2.82	TNT	Trinitrotoluene
3.2.83	TRR	Test Readiness Review

3.2.84 USCG US Coast Guard

3.2.85 WSTF White Sands Test Facility.

4. GENERAL REQUIREMENTS

4.1 Personnel Training

4.1.1 General. Personnel shall be properly trained for oxygen use and shall be familiar with several specific areas.

a. Personnel who handle and use oxygen or design equipment for oxygen systems must be familiar with its pertinent physical, chemical, and hazardous properties. The operators shall be certified in accordance with Chapter VI-A of NHB 1700.1. Personnel shall know what materials are compatible with oxygen and the cleanliness requirements of oxygen systems. They shall also be qualified to recognize system limitations and how to respond properly to all foreseeable failure modes.

b. Personnel must be thoroughly familiar with the use and care of protective and safety equipment and with first-aid techniques.

c. Operators must be trained in the selection of proper equipment for handling liquid oxygen (LOX) and gaseous oxygen (GOX) and in the procedures for handling spills and leaks and disposing of oxygen. Personnel involved in design and operations must adhere to accepted standards and guidelines and comply with established regulatory codes.

4.2 Basic Principles of Oxygen Safe Use.

a. Although oxygen itself is chemically stable, is not shock-sensitive, will not decompose, and is not flammable; its use involves a degree of risk that shall never be overlooked. This risk is that oxygen is a strong oxidizer that vigorously supports combustion. Oxygen is reactive at ambient conditions, and its reactivity increases with increasing pressure, temperature, and concentration. Most materials, both metals and nonmetals, are flammable in high-pressure oxygen; therefore, systems must be designed to reduce or eliminate ignition hazards. The successful design, development, and operation of high-pressure oxygen systems requires special knowledge and understanding of material properties, design practices, ignition mechanisms, test data, and manufacturing and operational techniques. The use of a particular material must be approved in accordance with center safety policy which should include obtaining cognizant Materials and Processes (M&P) approval.

b. Specific hazards will be addressed in paragraph 5 and ignition mechanisms in Appendix A, but the following principles apply to all oxygen systems:

(1) Materials that are highly reactive in oxygen must be avoided.

(2) Materials that are less reactive, but are still flammable (see situationally flammable, paragraph 3.1.79) can be used if protected from ignition sources, such as:

(a) Friction
(b) Heat of compression

(c) Heat from mass impact
(d) Heat from particle impact
(e) Static electric discharge
(f) Electric arc and spark
(g) Resonance
(h) Internal flexing
(i) Exposure of fresh metal surfaces
(j) External heat sources

(3) Oxygen systems shall be kept clean because organic compound contamination, such as hydrocarbon oil, can ignite easily and provide a kindling chain to ignite surrounding materials. Contamination can also consist of particles that could ignite or cause ignition when impacting other parts of the system.

(4) With LOX an additional hazard exists; operators and sensitive equipment must be protected from extremely low temperatures.

(5) Some of the most important features for safe oxygen systems include leak prevention, adequate ventilation, elimination of or minimizing the severity of ignition sources, proper material selection, good housekeeping, suitable design of system components, system cleanliness, and proper system operation. The necessity of maintaining system cleanliness and using ignition- and combustion-resistant materials cannot be overemphasized.

(6) Safety systems including at least two barriers or safeguards shall be provided under normal and emergency conditions so that at least two simultaneous undesired events must occur before any possibility arises of personnel injury or loss of life, or major equipment or property damage. Flight items that do not protect against two failures need to be noted and listed in the Failure Modes and Effects Analysis/Critical Items List (FMEA/CIL). Possible effects of tank failures, leaks and spills, transportation accidents, system failures, pump failures, power failures, fires and explosions, and personnel exposure shall be considered when designing and installing safety systems.

(7) The equipment, power, and other system services shall be verified for safe performance in both the normal and maximum operating regimes. Any failures shall cause the systems to revert to conditions that will be the safest for personnel and cause the least damage to the surrounding environment.

4.3 Warning Systems and Controls. Warning systems shall be incorporated in oxygen systems to monitor storage, handling, and use parameters such as pressure, temperature, and oxygen-enriched atmospheres. The oxygen system's control shall include warning systems with sensors to detect malfunctions and incipient failures that may endanger personnel and cause environmental damage. They shall be designed with sufficient redundancy to prevent any single-point failure from compromising the system's integrity in any way.

4.4 Safety Reviews. As part of ensuring safe oxygen use, various safety reviews shall be conducted regularly.

a. A hazards analysis shall be performed both at a component and system level (paragraph 5) and at a facility level (paragraph 10) to identify conditions that may cause injury, death, or major property damage.

b. Operating procedures, instrumentation, and controls shall be reviewed.

c. Emergency procedures shall be reviewed.

Note: Planning for personnel safety at or near the oxygen facility must begin in the earliest stages of the design process, to reduce risk to life.

4.5 Waivers. This standard contains required safety provisions noted by “shall” or “must” that must be followed to prevent loss of life, injury, or property damage. Waivers to these safety provisions will be handled and reviewed in accordance with local procedures that are consistent with NHB 1700.1.

5. PROPERTIES AND HAZARDS OF OXYGEN

5.1 Handling Hazards

5.1.1 Liquid Oxygen (LOX). The principal hazards associated with handling LOX are as follows:

a. Many accidents have occurred where LOX or liquid air, condensed from LOX systems, has dripped onto incompatible surfaces, such as asphalt or asphaltic-based tiles, and ignited. Some materials when exposed to LOX can be ignited by shock impact (carbonaceous materials, cellulose, fuels, and oils). Materials saturated with LOX, such as clothing, may become extremely flammable and ignited easily by static discharges or other small ignition energy sources. A few materials, typically strong reducing agents such as monomethylhydrazine, may spontaneously ignite on contact with LOX (Bannister 1994).

b. Oxygen cannot be kept as a liquid if its temperature rises above the critical temperature (-118.57 °C (-181.43°F)). At 1 atm. of pressure LOX boils at -182.9 °C (-297.3 °F). Any LOX trapped within a closed system and allowed to warm can build up to extreme pressures, causing the system to rupture and possibly produce dangerous flying debris.

c. The health hazards of LOX are associated with its very low temperatures, which may cause frostbite when the liquid or uninsulated piping containing LOX contacts the skin.

5.1.2 Gaseous Oxygen (GOX). Most oxygen-related accidents are promoted by the presence of contaminants or incompatible materials. The principal hazards associated with handling GOX are as follows:

a. Most fires in oxygen systems occur when oxygen in the presence of a system material or a contaminant ignites and burns, the resulting fire involves other system components in a kindling change process. In general, materials ignite at a lower temperature in GOX than in air, burn at a higher flame temperature, and burn more rapidly. Reaction speed can vary from a slow combustion to an explosion. Oxygen will saturate normal clothing and skin, rendering it extremely flammable.

b. Oxygen toxicity must be considered for exposure concentrations greater than 50 percent at 1 atm. Pure oxygen can be breathed for limited periods of time: up to 3 hours at 1 atm and 1 hour at 3 atm of pressure. Adverse effects from breathing pure oxygen at sea-level pressure can be felt in 4 to 24 hours (Lipsett, Shusterman, and Beard 1994; Potts 1991; Kindwall 1994).

c. Gaseous oxygen is usually stored under high pressure. Any pressure vessel rupture can produce dangerous flying debris. The pressure vessel material may also be flammable and augment the severity of the effects of a pressure vessel rupture.

5.2 Ignition Mechanisms

5.2.1 General Conditions. In oxygen or oxygen-enriched atmospheres, ignition of fuel-oxygen mixtures will occur with lower energy inputs and at lower temperatures than in air. For example, the minimum spark energy required for the ignition of hydrogen in air is 0.019 mJ (4.54 x 10^{-6} cal) at 1 atm (Lewis and von Elbe 1961), but the minimum spark energy for the ignition of hydrogen in 1 atm of oxygen is only 0.0012 mJ (2.8662 x $l0^{-7}$ cal) (Kuchta et al. 1971). Some potential sources of thermal and electrical ignition of fuel-oxygen mixtures are listed in Table 5-1.

5.2.2 Ignition Conditions. The usual conditions for ignition follow a “3T” rule of thumb (Kuo 1986). The three T’s stand for:

a. Temperature. Must be high enough to cause melting, vaporization, significant chemical reactions, and/or pyrolysis

b. Time. Must be long enough to allow the heat input to be absorbed by the reactants so that a runaway thermochemical process can occur

c. Turbulence. Must be high enough to allow good mixing between the fuel and the oxidizer and heat can be transferred from the reacted media to the unreacted media

5.2.3 Materials Tests. To date, no single test has been developed that can produce either absolute ignition limits or consistent relative ratings for all materials. Materials have been evaluated both by testing for their ignition and burning characteristics and by studying oxygen-related failures. An assessment of the causes of accidents and fires suggests that materials and components used in oxygen systems could be vulnerable to ignition that may lead to catastrophic fires (CGA 1971).

5.2.4 Ignition Factors.

a. Factors affecting the ignition of solid materials include material composition and purity; size, shape, and condition of the sample; characteristics of oxide layers; phase; testing apparatus; ignition source; gas pressure; and gas composition. Ignition temperatures are provided in Hilado (1982) for several solid materials in air and oxygen. The ignition process depends on the geometry and operating conditions; therefore, caution must be taken in interpreting the results of any ignition experiment and in generalizing ignition data. Generally, increasing the pressure reduces the ignition temperature for most materials (Schmidt and Forney 1975; Bryan and Lowry 1986; Swindells, Nolan, and Wharton 1988; Reynolds 1959).

b. Care must be exercised in applying ignition temperature data, especially for metals, to actual components. Ignition temperatures are not inherent materials properties but are dependant upon the items listed previously. When applying ignition temperature data, it must be ensured that the ignition temperature data were obtained in a manner similar to the end-use application. Failure to do this can result in erroneous materials selection decisions. For example, the ignition temperatures of aluminum in oxygen vary from 680°C (1255°F), which is the melting point of aluminum, to 1747°C (3176°F), which is the melting point of Al_20_3. The ignition

temperature obtained depends on whether or not the oxide is protective during the ignition process.

5.2.5 Ignition Mechanisms and Sources. Potential ignition mechanisms and ignition sources that should be considered include:

5.2.5.1 Particle Impact.

a. Heat is generated from the transfer of kinetic, thermal, or chemical energy when small particles moving at high velocity, strike a component. This heat, which is adequate to ignite the particle, may be caused by the exposure of unoxidized metal surfaces or the release of mechanical strain energy. The heat from the burning particle ignites the component (Benz, Williams, and Armstrong 1986). *Example:* High velocity particles from assembly-generated contaminants striking a valve body just downstream of the control element of the valve can cause particle impact ignition.

b. Aluminum and iron metal alloys have been ignited by impact of 1600 and 2000-μ-diameter aluminum particles traveling at velocities greater than 244 m/s (800 ft/s), while alloys with very high nickel and copper content have not been ignited (Benz, Williams, and Armstrong 1986, and Figure B-la).

c. Tests conducted with small quantities of iron powder and inert materials impacting against carbon and stainless steels indicated that when the particle mixture did not ignite, no ignition of the target materials was observed. Ignition of the particle mixture occurred at velocities greater than 45 m/s (150 ft/s) and at pressures ranging from 20 to 24 MPa (2900 to 3500 psia). The data suggest that specimen ignition is independent of pressure between 2 and 30 MPa (300 and 4300 psia) (Williams, Benz, and McIlroy 1988).

5.2.5.2 Mechanical Impact.

a. Heat is generated from the transfer of kinetic energy when an object having a relatively large mass or momentum strikes a component. The heat and mechanical interaction between the objects is sufficient to cause ignition of the impacted component. *Example:* The poppet of a solenoid-operated valve striking the seat can cause mechanical impact ignition.

b. Aluminum, tin, lead, and titanium alloys have been ignited experimentally in this way but iron, nickel, cobalt, and copper alloys have not. It has been determined for several aluminum alloys that the minimum energy to induce sample fracture was less than or equal to the minimum energy required to induce ignitions by mechanical impact. Therefore, mechanical failure will precede or attend mechanical impact ignitions of these alloys (Reed, Simon, and Berger 1991).

c. Mechanical impact testing of contaminated surfaces in oxygen indicates an increase in mechanical impact sensitivity (Sprenger 1975).

5.2.5.3 Pneumatic Impact.

a. Heat is generated from the conversion of mechanical work when a gas is compressed from a low to a high pressure. Pneumatic impact is an effective ignition mechanism with polymers but not with metals. *Example:* High-pressure oxygen released into a dead-end tube or pipe compresses the residual oxygen in the tube ahead and causes pneumatic impact.

b. Results of testing Teflon®-lined flex hoses are presented in Janoff et al. (1989) and Barthelemy and Vagnard (1988).

5.2.5.4 Promoted Ignition.

a. A source of heat input occurs (perhaps caused by a kindling chain) that acts to start the nearby materials burning. *Example:* The ignition of contaminants (oil or debris) combusts, releasing heat that ignites adjacent components, thus causing promoted ignition. Or, a polymer valve seat can ignite and combust, igniting the valve stem.

b. Several studies regarding promoted ignition and promoted combustion have been completed within the past ten years (Stoltzfus et al. 1988; McIlroy, Zawierucha, and Drnevich 1988). The pressure at which sustained upward combustion of the 0.32-cm (0.125-in.)-diameter rods occurs is defined as the threshold pressure. Summary of the threshold pressures for several metals and alloys is shown in Appendix B, Table B-5.

5.2.5.5 Galling and Friction.

a. Heat is generated by the rubbing of two parts together. The heat and interaction of the two parts, along with the resulting destruction of protective oxide surfaces or coatings, cause the parts to ignite. *Example:* The rub of a centrifugal compressor rotor against its casing causes galling and friction.

b. Several studies regarding frictional ignition have been completed (Jenny and Wyssmann 1983; Benz and Stoltzfus 1986). The resistance to ignition by friction is measured in terms of the *Pv* product, which is defined as the product of the contact pressure and the surface velocity. The relative rankings of the materials are shown in Appendix B, Tables B-2 and B-3.

5.2.5.6 Resonance.

a. Acoustic oscillations within resonant cavities cause a rapid temperature rise. This rise is more rapid and reaches higher values if particles are present or gas velocities are high. *Example:* A gas flow into a tee and out of a branch port can form a resonant chamber at the remaining closed port.

b. During the review of the shuttle main engine's oxygen flow system to evaluate possible causes of ignition and burning of metals, it became evident that cavities were present that could be subjected to resonance heating. Previously performed tests indicated that resonance heating could cause ignition and burning (Phillips 1975).

c. Results of studies with several types of tee configurations indicated that temperature increases caused by resonance heating would be sufficient to ignite both aluminum and stainless steel tubes. Tests with aluminum and stainless steel particles added to the resonance cavity indicated that ignition and combustion would occur at lower temperatures. Some of the tests with 400-series stainless steel resulted in ignition, but ignition appeared to depend more on system pressures and system design.

5.2.5.7 Electrical Arcing. Electrical arcing can occur from motor brushes, electrical power supplies, lighting, etc. Electrical arcs can be very effective ignition sources for any

flammable material. *Example:* An insulated electrical heater element can experience a short circuit and arc through its sheath to the oxygen gas, causing an ignition.

5.3 Hazards Analysis. Although oxygen is not intrinsically dangerous, its use involves a degree of risk that must never be overlooked. A hazards analysis should be performed on any equipment intended for oxygen service. The hazards analysis should include reviews of operating procedures (emphasizing those that increase the probability of personnel exposure), protective measures, and in-service inspection requirements. The hazards analysis should identify static and operational hazards and provide information for developing safer and more reliable components and systems.

a. The hazards analysis should be conducted according to the following outline:

(1) Determine the most severe operating conditions.

(2) Evaluate flammability of materials at the use conditions (situational flammability).

(3) Evaluate ignition sources.

(4) Perform configurational and component tests as required to determine and demonstrate safety margins to ignition thresholds.

b. The hazards analysis shall consider the most severe operating conditions, and their effects upon the system. It shall include the effect of operational anomalies and single-point failure modes, such as ignition, combustion, explosion, or the effect of oxygen enrichment of a normally ambient environment.

(1) The following parameters define some of the operating conditions relevant to the hazards of an oxygen system:

(a) Temperature
(b) Pressure
(c) Oxygen concentration
(d) Flow velocity
(e) Rubbing parameters (load, speed)
(f) Multiple duty cycles

(2) Components must be evaluated at the worst conditions they would experience given a single-point failure in the system.

(3) If it cannot be determined which condition is most severe or if the trends in material ignition and flammability (as a function of the parameters listed previously) are not understood, then the range of operating conditions must be considered.

c. Figure 5-1 shows the logic for determining whether or not a material can be used safely. The flammability of the materials used in the oxygen system shall be evaluated (see Materials Selection, paragraph 6). If a material is not flammable, then it may be used safely even if ignition sources exist. If the material is flammable, and if no ignition source exists, the material may still be used safely. However, if an ignition source exists, configurational and component tests should be performed to determine the safety margins to the ignition thresholds of the material. Appendices

A and B give more information on ignition sources and test methods. Potential ignition sources shall be evaluated to ensure no special hazards exist. Potential ignition sources should be eliminated through engineering design wherever feasible.

5.4 Oxygen Purity

a. Oxygen is easily contaminated because many gases and liquids are soluble and/or completely miscible in it. If an odorless and colorless gas is dissolved in oxygen, problems can occur. Contamination of systems can occur when inert gases such as argon and nitrogen displace oxygen, and asphyxiation can result when oxygen levels in breathing air or oxygen are depleted significantly below normal ambient levels. Explosions have resulted from inadvertent mixing of flammable gases with oxygen.

b. To prevent problems, oxygen used in NASA systems should conform to current revisions of MIL-O-27210 for breathing and MIL-P-25508 for propellant.

c. The very low temperature of LOX aids in condensing foreign matter and freezing out many impurities, resulting in the concentration of contaminants in the system.

Table 5-1
Some Potential Sources of Fuel-Oxygen Mixtures

Adiabatic compression
Thermal ignition
Personnel smoking
Open flames
Shock waves from tank rupture
Fragments from bursting vessels
Heating of high-velocity jets
Welding
Explosive charges
Friction and galling
Resonance ignition (repeated waves in flow system)
Mechanical impact
Tensile rupture
Exhaust from thermal combustion
Particle Impact
Electrical ignition
Electrical short circuits, sparks, and arcs
Metal fracture
Static electricity (two-phase flow)
Static electricity (solid particles)
Lightning
Generation of electrical charge by equipment operations

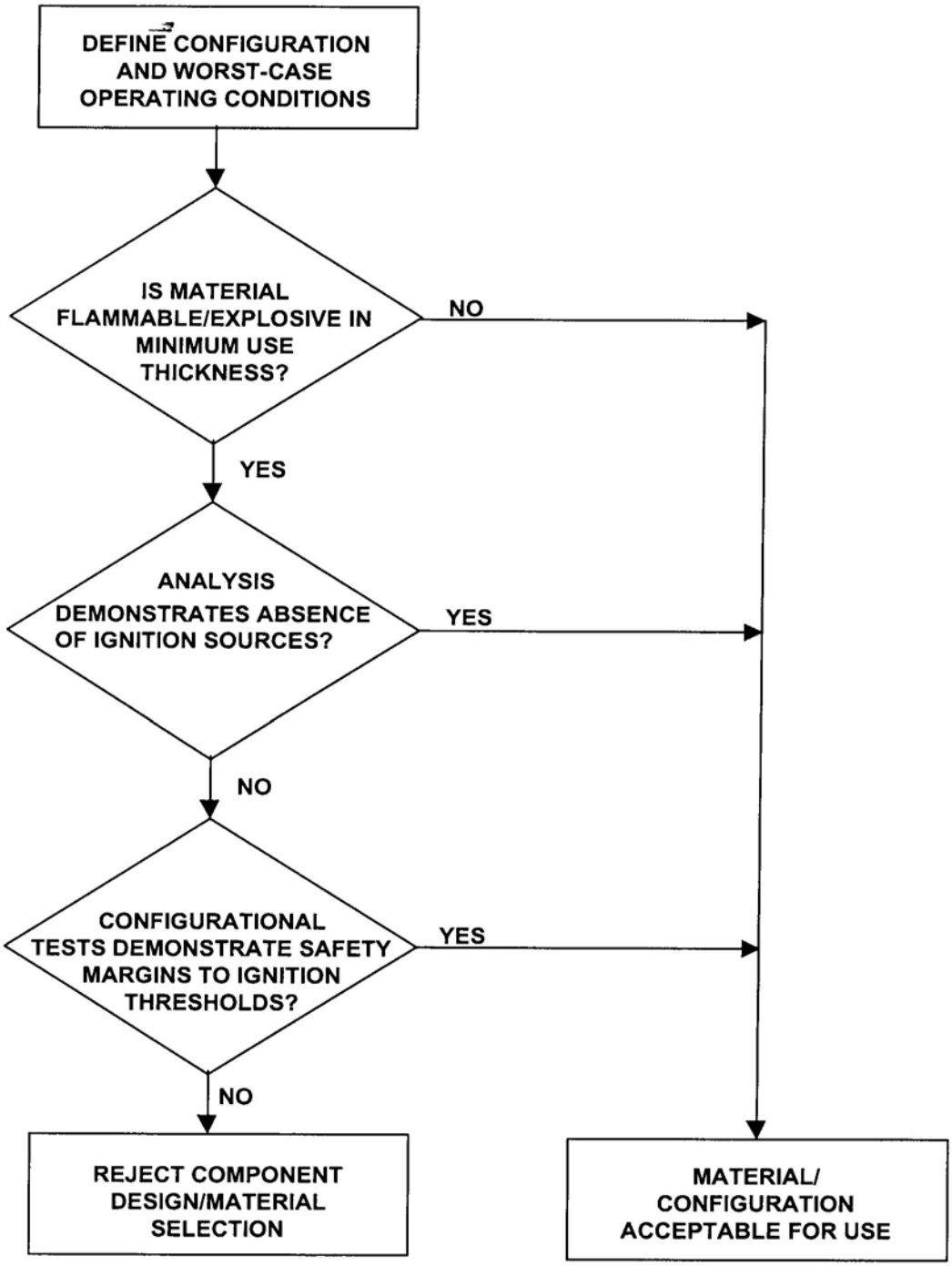

Figure 5-1
Material Safety Logic

6. MATERIALS SELECTION

6.1 General

a. While material selection cannot preclude system failures, proper material selection coupled with good design practice (see paragraph 7) can reduce the probability of system failures. Materials evaluation and selection have been based on both materials testing for ignition and combustion characteristics and studies of LOX- and GOX-related failures. No single test has been developed that can be applied to all materials to determine either absolute ignition limits or consistent relative ratings (Moffett et al. 1988 and 1989; Lockhart, Hampton, and Bryan 1989; Ikeda 1983). Ignition and combustion tests are described in paragraph 5.

b. The use of nonmetals in oxygen systems should be limited and their quantity and exposure to oxygen should be minimized because nonmetals are more susceptible to ignition than metals (all nonmetals are flammable in ambient or greater oxygen pressure). In many instances, failures of metallic components are caused by a polymer ignition, which provides sufficient energy for the metal to ignite. Soft goods are necessary in oxygen systems because of their functional properties; however, the limitations involved in their use must always be considered.

c. A large experience base and material test database for material selection exists for oxygen systems between 1 and 20.7 MPa (150 and 3000 psi); limited experience exists above 20.7 MPa (3000 psi). When selecting materials where little use experience exists, application-specific materials tests and configuration tests should be considered.

d. Information required to select materials and evaluate system safety includes material compositions and configurations, environmental and operational conditions (temperature, pressure, flow rate, or ignition mechanisms), and ignition and combustion behavior of the materials in the given environmental conditions. Ignition mechanisms to be considered in selecting materials are reviewed in paragraph 5.

e. Materials in an oxygen environment below their autoignition temperature (AIT) do not ignite without an ignition source. The rate of energy input has to exceed the rate of heat dissipation before ignition can occur. Ignition temperature is dependent on the property of the material, the configuration, the environment (temperature, pressure, oxygen concentration, and fuel characteristics), and the dynamic conditions for flow systems.

(1) Nonmetals, such as polymers, generally ignite at lower temperatures and pressures than metals; nonmetals may burn at oxygen pressures lower than 7 kPa (1 psia). The primary concern with nonmetals in oxygen systems is that, if ignited, they may cause damage to the oxygen system or user. Some damage that might result includes propagation of the fire to metallic components, loss of function arising from system leaks, and toxic combustion products entering the oxygen system.

(2) In general, metals are not easily ignited; however, metal particles may ignite easily. When ignited, however, burning metals can cause more damage than burning nonmetals because of their higher flame temperatures and because they usually produce liquid combustion products that spread fires readily.

f. Materials procured for use in oxygen systems require a material certification from the manufacturer. In addition, it is good practice to confirm the manufacturer-supplied information.

g. Materials to be used in LOX systems should also have satisfactory physical properties, such as strength and ductility, at operating temperatures.

h. For summaries of material test data, see ANSI/ASME B31.10 (1986); ASTM G 63 (1985*);* Benz (1984); Benz and Stoltzfus (1986); Benz, Williams, and Armstrong (1986); CGA (1971); Hust and Clark (1972); Key (1966 and 1972); Kimzey (1970); Lapin (1973); NASA SE-0-0104 (1990); NFPA 53 (1994); Schmidt and Forney (1975); Stoltzfus et al. (1988); and Werley (1988). Other data obtained from standard NASA materials tests are stored in the NASA Marshall Space Flight Center (MSFC) Materials and Processes Test Information System (MAPTIS), which may be accessed remotely using a modem; the data in this system are published periodically as the latest revision of MSFC-HDBK-527/JSC 09604 (see Appendix B).

i. When selecting a material for oxygen systems, its ability to undergo specific cleaning procedures to remove contaminants, particulates, and combustible materials (Chapter 6*),* without damage, should be considered (ASTM G 93 1985; CGA G-4.1 1987; Gilbertson and Lowrie 1986; Lucas and Riehl 1960).

6.2 Materials Control.

a. Agency-wide testing policy is given in NHB 8060.1. This handbook is updated periodically. Materials that pass the required tests can be considered for design.

b. According to ANSI/ASQC Zl .4 (latest revision), a batch is the same as a lot, and is a collection of the material that has all been made under the same conditions and at the same time, using the same starting materials. Experience has shown that some materials have such variability in manufacturing that different batches of the same material are not always satisfactory for use. A batch or lot may have a sample drawn from it and inspected to determine conformance with acceptability criteria. Batch lot testing was an agency-wide requirement (per NHB 8060.lB 1981) but was changed in NHB 8060.1C (1991). The need for batch lot testing is now determined by the responsible NASA center materials organization. For example, White Sands Test Facility (WSTF) has a list of materials that do not require batch lot testing if used below 20.7 MPa (3000 psia); this list is based on history of successful use in specific applications. Also, the Kennedy Space Center (KSC) has LOX and GOX materials selection lists that differentiate between materials requiring batch lot testing and those which do not. Table B-26 lists materials that do not require batch lot testing under stated conditions.

c. Section 2.2 of NHB 8060.1 describes how materials in LOX or GOX environments must be evaluated.

(1) Flammability. Materials must meet the criteria of Test 1, *Upward Flame Propagation,* (for nonmetals, environments less than or equal to 345 kPa (50 psia)) or Test 17 (NHB 8060.1).

(2) Impact Sensitivity. Materials must meet the criteria of Test 13A, *Mechanical Impact for Materials in Ambient Pressure LOX,* or Test 13B, *Mechanical Impact for Materials in Variable Pressure GOX and LOX* (NHB 8060.1), as applicable.

d. Section 2.3 of NHB 8060.1 lists the two additional criteria that materials used in breathing gas oxygen systems must satisfy.

(1) Odor. Nonmetals exposed to breathing oxygen or breathing air supplies in flight systems must meet the criteria of Test 6, *Odor Assessment.*

(2) Offgassing. Materials exposed to breathing oxygen or breathing air supplies must meet the criteria of Test 7, *Determination of Offgassed Products.*

e. Materials that do not meet the criteria of the required tests and are to remain candidates for use must be verified acceptable in the use configuration by analysis or testing and specifically approved by the responsible NASA center materials organization. Performing a hazard analysis (paragraph 5), can provide helpful information when determining if such materials can be safely used.

6.3 Nonmetallic Materials. The following section contains guidelines that should be considered when selecting nonmetals for oxygen systems. Appendix B contains a discussion of the test methods and test data.

6.3.1 Material Types. The nonmetals used in oxygen service are usually the polymers (including elastomers), plastics, thermosets, composites, and lubricants. Ceramics and glasses are not often used in oxygen systems and are considered inert when used; they are not discussed in this handbook. Selection of nonmetals is based on the results of tests and use experience. Additional information relating to the selection of nonmetals for oxygen service can be found in ASTM G 63 (1985).

a. Common elastomers used in oxygen systems are fluorinated elastomers, including Viton® and Fluorel® compounds. Elastomers are typically used for O-rings and diaphragms because of their flexibility; they have glass transition temperatures (T_g) below room temperature and are generally useful to 243 °C (406 °F) or more above the T_g. Silicone rubbers are often used in oxygen systems because of their extremely low T_g; however, they have poor ignition resistance and have been successfully replaced with Kalrez® in some applications and are generally not recommended.

b. The most frequently used plastics are the semicrystalline types like polytetrafluoroethylene (PTFE Teflon®), fluorinated ethylene propylene (FEP Teflon®), polychlorotrifluoroethylene (PCTFE), Kel-F®81, and amorphous polymers like polyimides (Vespel®SP21). Polytetrafluoro-ethylene is commonly used in oxygen systems because of its resistance to ignition by mechanical impact, high AIT, high oxygen index, and low heat of combustion. Unfortunately, PTFE has poor creep resistance; therefore, it is often replaced by polymers that are less compatible with oxygen.

c. Thermosets are less frequently used in oxygen and include epoxies and crosslinked polyimides, such as Polybon®.

d. Composites include the above polymer groups with nonpolymer reinforcement. Note, however, that in general incorporating a reinforcement material into a polymer, such as glass-filled Teflon®, will lower the ignition resistance of the material.

e. Lubricants and greases used in oxygen systems are mainly fluorinated (greases are typically derived from perfluoroalkyl ether fluids thickened with PTFE or FEP telomers) or halogenated chlorotrifluoroethylene (CTFE) fluids thickened with SiO_2 or higher molecular weight CTFE's).

6.3.2 Flammability. Polymers, although used extensively, are flammable in oxygen. The ignitability of polymers varies considerably (Bryan 1983), but the risks associated with the flammability of polymers can be minimized through proper selection combined with proper design. When selecting polymers for high-pressure oxygen systems, the susceptibility to ignition of the polymer and the possible ignition sources in the system at the use pressures must be given equal consideration with the structural requirements.

6.3.3 Ignition. The most common cause of ignition of polymeric materials in high-pressure oxygen systems is probably adiabatic compression heating of oxygen in the system by rapid pressurization. For this reason, it is important that oxygen systems containing polymers always be pressurized slowly. Mechanical impact is rarely a credible ignition source in high-pressure oxygen systems, because the level of mechanical impact to which polymeric materials are now exposed is normally well below the energies required for reaction. However, mechanical valve actuation, which has been largely eliminated from current designs, can cause impact loading of valve seats or other detail parts resulting in failure of the parts or mechanically induced ignition of polymeric materials. Other mechanisms for ignition of nonmetallic materials should be considered although test data may not exist. Ignition of polymeric materials by impact of metallic and nonmetallic particulate is probably feasible, although no conclusive studies have been conducted. Ignition of polymeric materials by burning contaminants has not been studied experimentally, but the use of incompatible oils and greases (especially hydrocarbon greases) is one of the most common causes of oxygen-system fires. Improper component design or installation can result in extrusion of polymeric materials with insufficient mechanical strength for the pressure application. The fresh, fine, extruded surfaces are far more ignition-susceptible than the undamaged polymer. Polymer extrusion has been blamed for some fires, but no formal ignition studies have been performed.

6.3.4 Selection Criteria. Criteria for selection of a preferred nonmetal for oxygen service are as follows:

a. few reactions when tested by mechanical impact,
b. a high AIT,
c. a low heat of combustion,
d. a high oxygen index,
e. a low flame temperature,
f. a high threshold pressure, and
g. a low burn rate.

6.3.5 Physical Properties Role. Although not fully understood, the thermal and physical properties of nonmetals play an important role in ignition and combustion. For example, a material's specific heat determines the amount of heat necessary to bring a polymer to its AIT. For polymers of comparable AIT's, the more heat required to reach the AIT, the less likely it is to ignite and combust. Physical properties play an important role in kindling chain ignition of metals from burning polymers (Shelley 1991).

6.3.6 Post-Ignition Consideration. Should ignition occur, several properties affect the ability of the material to damage adjacent construction materials (Benning and Werley 1986): The material's heat of combustion, mass, and flame propagation characteristics. Filler, char formation, and shape stability of a polymer have been shown to affect the burning polymer's propensity to ignite surrounding materials (Shelley 1991).

6.3.7 Operations. Operating conditions that affect a material's suitability for oxygen service are LOX or GOX temperature, oxygen pressure, concentration, flow and velocity. These operating conditions are important because increased oxygen availability leads to higher flame temperatures. A higher flame temperature can lead to a greater propensity to ignite surrounding metals.

6.3.8 Batch Lot Test Limitations. When tested by standard mechanical or pneumatic impact tests, many nonmetals show a range of reaction pressures when different batches or lots of material from the same source are tested using identical methods. The variability sometimes results from material composition or processing variations and sometimes from the poor statistical base of the tests. If variability results from changes in material composition or other material performance shortfalls, it is necessary to establish a minimum performance criterion and batch testing procedure. However, when statistical variation limits the sensitivity of an ignition or combustion test to batch variation, other tests can be substituted such as heat of combustion, melting points, density, or measurements for evaluating the batch-to-batch consistency of a material. Unfortunately, the current understanding of nonmetal ignition and flammability science rarely allows a direct correlation between these physical, thermal, and chemical property measurements and the important ignition and combustion characteristics.

6.3.9 Effects of Diluents. The effects of diluents and oxygen concentrations on the flammability of some polymers have been investigated (Hirsch, Bunker, and Janoff 1991). The data indicate that the selection of polymers for both air and oxygen systems above 20.7 MPa (3000 psia) should be similar.

6.4 Metallic Materials

6.4.1 Metals are the most frequently used construction materials of oxygen systems. Metals are generally less susceptible to ignition than polymers. They are often ignited by a kindling chain reaction from a polymer or hydrocarbon contaminant. Selection of the proper metals in an oxygen system, coupled with good design practice can minimize the hazards of ignition and combustion of the metal. While selecting metals for oxygen service situational or configurational flammability must be evaluated.

6.4.2 In some cases, the resistance to ignition for metals is caused by a protective oxide coating on the metal surface, and the oxide coating should be considered when selecting the metal. For example, in nickel alloys whether nickel, chromium, silicon, iron, or Al_2O_3 or a combination of these metal oxides forms depends very much on the composition of the alloy being oxidized and also the environment to which the metal is subjected (Lowrie 1983). Nickel oxide (NiO) and iron oxide (FeO) are not protective coatings in metals mainly because they are not stoichiometric line compounds and, hence, diffusion through vacancies and interstitials is high. However, chromium oxide (Cr_2O_3), silicon oxide (SiO_2), and Al_2O_3 do not have this problem because they are stoichiometric line compounds. The Pilling and Bedworth ratio indicates that Ni, Cr, Al, and Fe should form a protective oxide layer (ASTM G 94 1990); however, this ratio does not provide insight into the tenacity of the film or whether the oxide film does grow conformably. Although Cr_2O_3 can form a passivating oxide film, it cannot be used for temperatures above 800°C (1470°F) because it volatilizes. SiO_2 is not a good oxide film to have in situations where thermal cycling of the material is needed, because of its limited thermal shock resistance. Al_2O_3 is a good oxide of choice, but it can only form easily at high temperatures above 1000°C (1830°F). However, like most oxides, it has very little ductility, it cannot withstand thermal cycling and thermal shock, and it tends to spall off. Adding reactive elements in very small amounts to alumina-forming alloys has successfully avoided spalling up to high temperatures.

6.4.3 The following paragraphs discuss the advantages and disadvantages of common candidate metals for oxygen systems.

6.4.3.1 Nickel and Nickel Alloys. Nickel and nickel alloys are very resistant to ignition and combustion. Nickel alloys usually have high strengths with significant low-temperature toughness.

6.4.3.1.1 Nickel-Iron Alloys (such as Inconel® alloys). The ignition resistance of Inconel® alloys varies with the specific alloy. Inconel® 718 has been used extensively in high-pressure oxygen systems in recent years, because it is a good structural material and has been considered significantly less ignitable than stainless steels. Some Inconel® alloys have been used successfully at pressures as high as 69 MPa (10000 psia). However, recent studies[1] indicate that Inconel® 718 is only marginally less ignitable than stainless steels. Inconel® alloys appear to resist ignition by particle impact better than most stainless steels, but are similar to stainless steel 440C. Some Inconel® alloys have exceptional resistance to ignition by frictional heating, but others (including Inconel® 718) ignite at *Pv* products[2] similar to those of stainless steels. Inconel® MA754, a mechanically alloyed material, has exceptional resistance to ignition by frictional heating and does not support self-sustained combustion (0.32-cm (0.125-in)-diameter rod burning upward) at pressures as high as 69 Mpa (10000 psia).

6.4.3.1.2 Nickel-Copper Alloys (such as Monel® alloys).

a. Monel® alloys, nickel-copper alloys, are the least ignitable alloys commonly used as structural materials. Monel® 400 and K-500 have not ignited in particle impact tests (although some surface melting and burning may be observed) and do not burn upwards in upward flammability tests even at oxygen pressures as high as 69 MPa (10000 psia). Monel® alloys ignite in frictional heating tests at higher loads than stainless steels, but the fire does not propagate. (Monel® alloys have unusually high values for the friction coefficient μ). Ignitions have occurred even in test systems fabricated of Monel® and precautions should also be taken to minimize ignition sources when designing Monel® systems. However, fewer precautions are required when ignition-resistant materials are present than when more ignitable materials are present and configurational testing is rarely essential. Monel® alloys have been used at pressures above 69 MPa (10000 psia) without problems.

Note: Monel® and Monel® alloys are flammable in finely divided configurations, such as wire mesh and sintered powder.

b. Monel® alloys are rarely materials of choice for flight systems because of the perception that components constructed of them weigh more than those of other alloys. However, these alloys can often be obtained in the necessary range of hardnesses and specific strengths. Monel® K-500 can be used for valve stems and Monel® 400-series for valve bodies. Springs can be wound from Monel® wire. Monel® alloys are recommended for ground-based, manually operated systems when the cost of demonstrating safe operation with other materials is high. In aerospace systems, when weight is a constraint, the use of Monel® sections or Monel® linings in key areas can provide extra protection from ignition and fire propagation without increasing weight. In fact, because of the greater strength-to-weight ratio of Monel® compared to Al, Monel® components can sometimes be made smaller and lighter.

---

[1] Unpublished results of tests conducted at White Sands Test Facility. See Table B-2, Appendix B.
[2] The *Pv* product is a measure of resistance to ignition by friction. *P* is the contact pressure and *v* is the surface velocity. Additional detail is provided in Appendix B.

6.4.3.1.3 Other Nickel-base Alloys (such as Hastelloy®). Some Hastelloy® such as C-22 and C-276 are much more ignition resistant than stainless steels and Inconel® 718.

6.4.3.2 Stainless Steels. Stainless steels are far more ignition- and burn-resistant than titanium and aluminum alloys and are used extensively in high-pressure oxygen systems. The ignition and burn resistance is about the same for most stainless steels; occasional exceptions exist, such as stainless steel 440C, which ignites and propagates flame less easily than other steels. Few problems are experienced with the use of stainless steel storage tanks or lines, but ignitions have occurred in stainless steel components such as valves in high pressure and high flow rates. Although stainless steel particulate can ignite materials, it is far less hazardous than aluminum particulate. Stainless steels have high heats of combustion and are ignited quite easily by frictional heating, particle impact, and promoters.

6.4.3.3 Copper and Copper Alloys.

a. Copper is suitable for use in oxygen systems at all pressures. It is particularly useful for resisting ignition by particle impact and therefore can be used as impingement plates (see paragraph 7).

Note: Copper and some copper alloys are flammable in finely divided configurations, such as wire mesh).

b. Copper is resistant to ignition and combustion, but it also has a low ductility oxide, which is not tenacious and sloughs off. This can cause contamination in oxygen systems (Baum, Goobich, and Trainer 1962).

c. Aluminum-bronze, although containing a high amount of copper, is not recommended for use in oxygen systems because of its flammability and ignitability (Stoltzfus et al. 1988).

d. Recent testing has shown that sintered bronze is less flammable than sintered Monel® 400 and stainless steel for filter element material (Schadler and Stoltzfus 1993).

6.4.3.4 Aluminum and Aluminum Alloys.

a. Aluminum alloys are attractive candidate materials for pressure vessels because of their high strength-to-weight ratios. Aluminum is not ignited as easily as titanium and has been used extensively in aerospace oxygen systems where weight is of paramount importance (Benz and Stoltzfus 1986; Barthelemy, Dlode, and Vagnard 1989). It is especially useful for oxygen storage tanks and similar areas where no credible ignition hazard exists. The use of aluminum alloys in lines, valves, and other components should be avoided whenever possible because they easily ignite in high-pressure oxygen, burn rapidly, and have very high heats of combustion. Aluminum is ignited exceptionally easily by friction because the wear destroys its protective oxide layer; it should not be used in systems where frictional heating is possible.

b. Aluminum is very easily ignited by particle impact, and aluminum particulate is a far more effective ignition source than many other metal particulate tested to date (titanium particulate has not been tested). High-pressure oxygen systems fabricated from aluminum must be designed with extreme care to eliminate particulate; filters should be fabricated of materials less ignitable than aluminum; nickel, silver, bronze, or Monel® alloys are recommended, although

Monel® wire meshes are known to be flammable in high-pressure oxygen (Stoltzfus, Lowrie, and Gunaji 1991). Aluminum alloys are more suitable for static components with low oxygen flow rates, such as oxygen storage tanks, than for components with internal movement and variable flow such as valves and regulators. Systems that use large areas of aluminum alloys in oxygen storage tanks should be designed to ensure that aluminum particulate cannot cause ignition of other metallic materials downstream from the aluminum.

c. A thin, protective, oxide surface film provides resistance to aluminum reactions in oxygen. Aluminum's tough, tenacious oxide, which has a melting point of 2342°C (3708°F), protects the base metal from ignition to a degree under static conditions even above the melting point of aluminum (1406.5°C (1219.4°F)). High temperatures (>477°C (1070°F)), abrasions, or stress may cause a loss of film integrity, increasing the tendency of the metal to burn.

d. In mechanical impact tests conducted at NASA WSTF, aluminum 6061-T6 did not ignite. Tests were conducted with specimens of several diameters and thickness in LOX and GOX at pressure of 69 MPa (10000 psia). Sample contamination demonstrated the sensitivity of metals to ignite because of mechanical impact. Aluminum 6061-T6's susceptibility to ignition by mechanical impact increased when it was contaminated with cutting oil, motor lubricating oil, or toolmaker's dye (Sprenger 1975).

e. Promoted combustion tests on aluminum-lithium alloys have indicated that they are less flammable than aluminum. The threshold pressure for aluminum-lithium alloys is approximately 1.7 MPa (250 psia) while the threshold pressure for pure aluminum is approximately 0.17 MPa (25 psia) (Tack et al. 1991).

f. Particle impact tests on anodized aluminum targets have indicated that anodizing the surface increases the resistance to ignition by particle impact (Bahk et al. 1992).

6.4.3.5 Iron Alloys

a. Iron alloys are not good candidates for oxygen systems because they easily ignite and offer little weight savings; however, iron alloys are used extensively in cylinders. Iron alloys, like many other alloys, can be used only if the credible sources of ignition are identified and removed.

b. Alloy steels (Fe-Ni) suitable for use in oxygen systems include 5-percent nickel, 9-percent nickel, and 36-percent nickel (Invar). The threshold pressure for Invar 36 is similar to most stainless steels. In frictional heating tests a similar behavior is noted, where the *Pv* product for ignition is comparable to that of stainless steels. (Refer to Appendix B.)

6.4.3.6 Restricted Alloys. The use of certain metals in oxygen systems must be restricted (NASA JSC SE-R-0006). These include the following:

6.4.3.6.1 Titanium. Of the various titanium alloys tested (α, α-β, β alloys) and reported all showed very high sensitivity to mechanical impact in oxygen (Key and Riehl 1964). Titanium must not be used with LOX at any pressure or with GOX at oxygen pressures above 207 kPa (30 psia). Tests have indicated that titanium, α -titanium, and α_2 -titanium alloys can be ignited and sustain combustion at oxygen pressures as low as 7 kPa (1 psia). Frictional heating test conducted on titanium and titanium alloys indicated that the *Pv* product for ignition is extremely low (see Table B-2, Appendix B). Recent tests at WSTF indicate that titanium and its alloys can also be ignited in air in frictional heating tests. Titanium alloys must be avoided in

storage or test facility systems since titanium is impact-sensitive in oxygen. A reaction of titanium and LOX or GOX may propagate and completely consume the metal (Kimzey 1970; Laurendeau 1968; Pelouch 1974; McKinley 1971).

6.4.3.6.2 Cadmium. Cadmium's toxicity and vapor pressure restrict its use. Systems containing breathing oxygen must not include cadmium if temperatures will exceed 49°C (120°F) at any time.

6.4.3.6.3 Beryllium. Beryllium must not be used in oxygen systems or near oxygen systems where it could be consumed in a fire, because beryllium metal, its oxides, and its salts are highly toxic. Design of beryllium parts must include consideration of its low impact resistance and its low notch sensitivity, particularly at low temperatures.

6.4.3.6.4 Magnesium. Magnesium alloys must not be used except in areas where minimal exposure to corrosive environments can be expected. Reactivity with halogenated compounds constrains its use with lubricants containing chlorine and fluorine. In promoted combustion tests in 100 percent oxygen, magnesium and its alloy AZ-91 have shown the ability to sustain combustion even at pressures as low as 7 kPa (1 psia).

6.4.3.6.5 Mercury. Mercury must not be used in oxygen systems in any form, including amalgamations. Mercury and its compounds can cause accelerated stress cracking of aluminum and titanium alloys. Toxicity further limits its use.

6.4.3.7 Other Metals and Alloys. Many other metals and alloys exist that have mechanical properties suited to applications in high-pressure oxygen systems. New alloys are continually being developed, and some are being designed that resist ignition and do not support self-sustained combustion in high-pressure oxygen systems. The ignitability of other metals and alloys in high-pressure oxygen and their ability to propagate fire after ignition must be compared to the flammability properties of the common structural materials described above before determining how suitable they are for use in high-pressure oxygen systems. Before a new alloy is used in an oxygen system, its use and application must be reviewed and approved by the cognizant center's organization responsible for control of Materials & Processes (M&P).

7. DESIGN PRINCIPLES

7.1 Design Approach. The generally accepted steps in the design process, including design and quality and acceptance testing are given below. Specific design details are given in paragraphs 7.2 through 7.4 with examples given in Appendix C.

7.1.1 Risk Training. Before embarking on a new design task, it is important that designers, customers, and operators understand the risks associated with oxygen systems. Experience with inert fluids such as nitrogen does not qualify one to safely design and operate oxygen systems. This chapter addresses concerns specific to oxygen systems.

7.1.2 Design Specifications. Each new design project must begin with specifications for the requested item. It is important to ensure that these specifications do not create an unnecessary risk for personnel or equipment. Also, many materials are combustible in oxygen-enriched environments, and reactivity is generally increased with increasing temperature and pressure; therefore, materials selection criteria are critical to achieving a successful final product. However, do not over-specify. Requesting higher temperature and pressure ratings than are

necessary requires more expensive materials and heavier and bulkier parts and increases risks associated with testing and final use.

7.1.3 Design Reviews. In addition to the standard practice of reviewing functional operation, component ignition and combustion in oxygen-enriched environments must also be assessed. The overall design process must reduce the hazards associated with component ignition and combustion. Before constructing oxygen facilities, equipment, and systems; the design safety shall be approved by the designated installation safety authority or other approval points. The design review process shall be conducted in accordance with NHB 1700.1. Reviews of the final drawings, designs, structures, and flow and containment systems shall include a safety assessment to identify potential system hazards and compliance with local, state, and federal agency regulations. The safety assessment should also include the safety history of the system hardware. Such histories can identify equipment failures that may create hazardous conditions when the equipment is integrated. The safety assessment process should be integrated into the overall facility design review process. Each design review phase should evaluate the safety aspects of the project according to its level of completion. All the procedures described in the following section refer to the design of both components and systems for oxygen use. The design reviews ultimately need to address all design aspects down to the individual part level, because all parts pose potential hazards in oxygen service. The following reviews should be conducted:

7.1.3.1 Preliminary Design Review (PDR), including materials and specifications reviews.

7.1.3.2 Integrated Failure Modes and Effects Analysis and Hazard Analysis.

7.1.3.2.1 Failure Modes and Effects Analysis (FMEA). An FMEA reviews each hardware item and analyzes it for each possible single-point failure mode and single-barrier failure and their worst-case effects on the entire system. An FMEA will also include the results of the oxygen hazards analysis. The interdependencies of all components must be addressed, and any single-point failures and the result of single-barrier failures must be noted in a summary list of action items to be corrected. Single-barrier failures are often overlooked, but the potential for component-part failures, such as diaphragm failures, can cause hazardous oxygen-enriched environments, and can cause a substantially increased risk of ignition near electrical components, for example. Attempting to correct single-point failures simply through procedural actions is not a reliable method. Also, the FMEA shall consider the effects of failures in both static and dynamic operating conditions. When performed early in the design phase, this analysis greatly assists the designer in ensuring reliable systems. The FMEA should be performed before fabrication of the component or system (National Space Transportation System (NSTS) (NSTS 22206)).

7.1.3.2.2 Systems and Subsystems Hazards Analysis. The hazards analysis shall identify any conditions that could possibly cause death, injury, or damage to the facility and surrounding property (ASTM G 88). It should also

a. Include the effects of component and assembly single-point failures

b. Review all ignition modes for all components and assemblies (see paragraph 5.4)

c. Include hazards associated with comtamination

d. Review secondary hazards, such as seal leakage to electrical equipment

e. Consider the effects of maintenance procedures on safety and performance

f. Review toxicity concerns, especially for breathing oxygen

7.1.3.3 Critical Design Review (CDR). The final design review shall be held after all preliminary analyses have been completed and the action items from these analyses have been resolved. In this review, the final fabrication drawings and the supporting calculations shall be reviewed and all final action items resolved before authorizing fabrication and use.

7.1.3.4 System Safety Analysis/Safety Review (SSA/SR). All safety aspects, including oxygen hazards, shall be reviewed to ensure the integrated design solution does not present unacceptable risks to personnel and property NASA Management Instruction (NMI) 1710.3; NHB 1700.1).

7.1.3.5 Other reviews. In addition to the PDR, FMEA, CDR, and SSA, other reviews may be conducted such as:

7.1.3.5.1 Test Readiness Review (TRR). Operational procedures, along with instrumentation and control systems, shall be evaluated for their capacity to provide the required safety. Equipment performance should be verified by analysis or certification testing (NMI 1710.3). It may be necessary to develop special procedures to counter hazardous conditions.

7.1.3.5.2 Emergency Procedures Review (EPR). The safety of personnel at or near oxygen systems should be carefully reviewed and emergency procedures developed in the earliest planning and design stages. Advance planning for a variety of emergencies such as fires and explosions should be undertaken so that the first priority is to reduce any risk to life.

7.1.3.5.3 Operational Readiness Inspection (ORI). An ORI may be required for any major facility change. Oxygen hazards should be specifically reviewed for compliance with, for example, NHB 1700.1.

7.1.4 Component and System Testing. The intent of component and system testing is to ensure the integrity of equipment for its intended use. A wide variety of tests may be required, depending upon the critical nature of the equipment and whether or not it is flight-rated hardware. Compliance with NMI 1710.3 is required.

7.1.4.1 Prototype Development Testing. Initial testing is often best performed with inert fluids; however, acceptance tests of the final hardware configuration should be conducted with clean oxygen and parts cleaned for oxygen service. Testing with oxygen must begin only after an oxygen hazards analysis has been performed on the specific test hardware.

7.1.4.1.1 Engineering Development Testing. This testing is intended to verify safe and reliable operation over a realistic range of operating conditions. It includes pressure integrity tests, assembly leak tests, and configurational tests.

7.1.4.1.2 Worst-Case Operating Condition Testing. Testing at worst-case conditions shall be considered to evaluate limited design margins, single-point failures, and any uncertainties in the design criteria. Life-cycle and flow tests are important in this phase of testing. Life-cycle tests should be performed to determine the safety and longevity of system components. The components should be tested in each operational mode with the number of cycles based on the anticipated end-use (Stoltzfus and Stradling 1980; Stoltzfus, nderson, and Stradling 1981). Experience indicates that 60 cycles for each of two configurations or 30 cycles for each of four

configurations will verify the functionality of components designed for oxygen service (Bamford 1992). These do not constitute qualification, life-cycle, or pressure qualification (proof) tests.

7.1.4.2 Qualification Testing (as required). Test requirements will vary for each component or assembly to be tested. The equipment supplier, test facility personnel, and end-user need to develop a joint test program to verify function and oxygen compatibility.

7.1.4.3 Acceptance Tests (as required). Test requirements will vary for each component or assembly to be tested. The equipment supplier, test facility, and the end-user need to develop a joint test program to verify function and oxygen compatibility.

7.2 Design for High-Pressure and High-Temperature Oxygen Systems. Design features, such as the physical design of components and the component location within a system, must be effectively coupled with proper materials selection to achieve safe operations. Evaluation of such design features should begin with the preliminary design reviews. Appendix C gives specific examples of design problems and ways to avoid them.

7.2.1 Materials Guidelines. Designers of equipment for oxygen use shall thoroughly understand the reactivity of selected materials in oxygen-enriched environments. Usually, the designer should avoid flammable materials, but many materials that are flammable at operating conditions can safely be used by carefully avoiding ignition sources. Criteria for evaluating and selecting materials for use in oxygen are given in paragraph 6 and Appendix B.

7.2.1.1 Materials.

a. Ensure, through testing if necessary, that the materials selected have the proper materials properties; such as strength, ductility, and hardness; to operate safely under all conditions. Combinations of these properties should be considered. For example, strength tends to decrease with increasing temperature, while ductility tends to decrease with decreasing temperature.

b. Additionally, materials should be evaluated for ignitability and flammability over their intended operating range. Use materials below ignition thresholds for the applicable ignition mechanisms. Most materials in contact with oxygen are combustible under certain conditions. For example, flammability tends to increase with increasing temperature and pressure.

7.2.1.2 Ignition Mechanisms (refer to Appendix C). When selecting materials, consider ignition mechanisms that could be present in the system. Test data relating to material behavior with respect to these ignition mechanisms should be obtained or generated as a standard practice at the onset of the design process (Appendix D). Consideration of ignition mechanisms should include (but not be limited to) mechanical impact, pneumatic impact, particle impact, promoted combustion, frictional heating, electrical arcing, and single-barrier failures.

7.2.1.3 Additional Materials Guidelines.

a. Consider the effects of specific material processing, coatings, and other surface preparations. Designers should understand the effects of specific material processing, coatings, and other surface preparations. The designer should first attempt to meet all functional requirements without coatings, platings, or hard-facings. In most applications, surface preparations can be avoided. Special cases may arise, however, in which a surface preparation cannot be avoided. One example is a valve that must be fabricated entirely of a single metal alloy

because of metal-to-fluid compatibility considerations; to avoid galling in this case, an oxygen-compatible solid lubricant may be necessary. When a surface preparation cannot be avoided, the effect of cleaning procedures on the coating and substrate must be considered. The designer should consider the mechanical and physical properties at all usage conditions. Generally, materials will become stronger and more brittle at reduced temperatures.

b. Take advantage of specific strength, which often allows the use of the most oxygen-compatible materials to improve performance and of the material strength to density, and this is the critical parameter for determining the weight of flight-weight hardware. Using this ratio, it may be that metals with high strength, such as Monel® K-500, can be used as a replacement for lightweight metals, such as aluminum.

c. Use fluorinated lubricants approved for oxygen usage.

d. Design for thermal expansion and contraction. Leaks are commonly caused by the disparity of thermal expansion coefficients between polymers and metals. Upon cooling, the shrinkage of polymers will exceed that of metals, and seals will lose the compression required for sealing.

7.2.2 General Design Guidelines. Alone, the use of ignition- and burn-resistant materials for components in oxygen systems will not eliminate oxygen fires. Designs shall consider system dynamics, component interactions, and operational constraints, in addition to component design requirements, to prevent conditions leading to oxygen fires. Refer to ASTM G 88 for additional system design guidelines and to paragraph 6 of this document, ASTM G 63, and ASTM G 94 for materials use guidelines. Although it is not always possible to use materials that do not ignite under any operating condition, it is normally understood that the most ignition-resistant materials should be used in any design. The designer should also avoid ignition modes wherever possible, but what may not be clear is that the designer must also consider the relative importance of the various ignition modes when designing new or modified hardware. This means that certain ignition modes are more likely than others to result in failures, either because of the amount of soft goods present or the likelihood of a particular event leading to component heating and subsequent ignition. To reduce the risk of ignitions, any ignition failure mode that involves soft goods, contamination, or rapid pressurization must be carefully scrutinized. The following design guides are presented roughly in the order of priority described above.

a. Design, fabricate, and install per applicable codes (refer to 7.4).

b. Use filters to isolate system particulate; however, they should be placed in locations where they can be removed and inspected and where no possibility of back flow exists. A helpful practice is to check the pressure differential across the filter to aid in tracking the filter status. Use filters at the following locations:

(1) Module inlets and outlets
(2) Disconnect points
(3) Points required to isolate difficult-to-clean passageways
(4) Upstream of valve seats

c. Design component and system combination to avoid chatter.

d. Ensure proper materials certifications.

e. Design for fire containment using methods such as fire break, fire blow out, or remote operation. Use fire-resistant materials.

f. Design to allow a blowdown of the system with filtered, dry, inert gas at maximum attainable flow rates and pressures after system fabrication. This serves to purge or isolate assembly-generated particulate.

g. Design to minimize choked flow. Consider shut-off valves, metering valves, relief valves, and regulators to reduce particle impact ignition risks.

h. Avoid captured vent systems. A relief valve or burst disc that is not open directly to the atmosphere, but rather has a tube or pipe connected to the outlet, is said to have a captured vent. If a captured vent is necessary, use highly ignition-resistant materials such as Monel® and copper (see paragraph 7.4.4.2).

i. Bulk oxygen installations are not hazardous (classified) locations as defined and covered in Article 500 of NFPA 70. Therefore, general purpose or weatherproof types of electrical wiring and equipment are acceptable depending upon whether the installation is indoors or outdoors. Such equipment shall be installed in accordance with the applicable provisions of NFPA 70.

j. Electrical wiring in high concentrations of GOX should be encased in hermetically sealed conduits or conduit inerted with helium or nitrogen gas. The instruments, switches, flow sensors, and electrical devices should be designed in modular structure and hermetically sealed, and inerting with nitrogen or helium is recommended.

k. Materials for electrical and electronic equipment should be selected to meet the intent of specifications found in NFPA 70. Electrical terminals should not turn or loosen when subjected to service conditions; terminal points should be protected from shorting out by eliminating foreign objects and contaminants.

7.2.3 Specific System Design Guidelines. Oxygen system designers should:

a. Minimize the amount of soft goods and their exposure to flow. Soft goods exposed to flow can be readily heated through rapid compression (Shelley, Christianson, and Stoltzfus 1993), or readily ignited through kindling chain reactions. Minimizing soft goods exposure by shielding with surrounding metals can significantly reduce ignition hazards.

b. Limit GOX pressurization rates. Soft goods (such as seals, coatings, and lubricants) are susceptible to ignition from heating caused by rapid pressurization. For example, Teflon ® -lined flexible hoses are sensitive to this ignition mode, and their use with rapid pressurization applications is discouraged (Janoff et al. 1989). Pressurization rates of valve and regulator actuators shall be minimized. And in some applications, flow-metering devices are prudent for manually actuated valves, especially for quarter-turn ball valves.

c.Limit GOX flow velocities. Limiting flow velocities minimizes erosion problems and reduces the risk of particle impact ignitions. Although each material and configuration combination must be reviewed individually, fluid velocities above 30.5 m/s (100 ft/s) should receive special attention, especially at flow restrictions (Williams, Benz, and McIlroy 1988; Benz, Williams, and Armstrong 1986; CGA G-4.4 1984).

d. Minimize mechanical impact. Mechanical impact ignitions can ignite large parts, and the impacts can also ignite contamination and soft goods entrapped by the impact. Relief valves, shutoff valves, regulators, and subminiature parts should be reviewed for this hazard especially.

e. Minimize frictional heating in oxygen. Frictional heating, such as heating that occurs with bearings and pistons, can cause ignitions (Dees and Peterson 1992). Any contamination near the heated region can also be ignited. Frictional heating hazards can be reduced by carefully controlling surface finishes, coefficients of friction, alignment, and flow-induced cooling. Frictional heating has also been found to ignite materials in cryogenic applications.

f. Minimize blunt flow impingement surfaces. The risk of particle impact ignitions can be reduced if potential impact surfaces are designed with shallow impact angles to reduce the kinetic energy absorbed by the impact surface upon impact (Christianson and Plante 1989).

g. Eliminate burrs and avoid sharp edges. Burrs and sharp edges on equipment provide ignition sources for particle impact, and they also provide the ingredients for kindling chain combustion propagation (Christianson and Plante 1989). Removal of this material is standard shop practice and is essential to avoid oxygen-enriched ignitions.

h. Design to minimize use-generated particulate during manufacture, assembly, and operation, as this particulate could be a source of particle impact ignition. Designs should have provisions to minimize particulate generation through the normal operation of valve stems, pistons, and other moving parts. This can be accomplished by using bearings, bushings, and configurations to keep particulate away from oxygen-wetted regions. Additionally, the assembly, cleaning, and maintenance practices should minimize contamination.

i. Avoid rotating valve stems and sealing configurations that require rotation on assembly. Rotating valve stems and seals can gall and generate particulate.

j. Minimize electrical arcing. Electrical arcs in oxygen-enriched environments can lead to heating and subsequent ignition.

k. Eliminate blind passages. Long, narrow passages or blind passages are difficult to clean and to inspect for cleanliness. Additionally, they can provide a location for particulate to accumulate during operation of the equipment. This contamination can make the equipment susceptible to particle impact, rapid compression, and resonant cavity ignitions.

l. Avoid crevices for particulate entrapment and resonant cavities (Phillips 1975). Cavities, especially those formed at the intersection of mating parts in assemblies, create a location where contamination can accumulate and increase ignition risks, as in blind passages.

m. Design dynamic seals to minimize particulate generation. Minimize coefficients of friction and surface finishes, and choose seal configurations to minimize particle generation that can cause particle impact ignitions.

n. Limit fluid-induced vibrations (over all operating ranges). Vibrations can cause fretting, galling, impacting, and particle generation in components and systems. Check valve chatter and valve poppet oscillations are examples of this phenomenon. Particulate accumulations will increase the risk of particle impact ignitions.

o. Consider the effects of single-point seal failures. Seals will degrade with time and use. Eventually, they may be expected to fail to seal the contained fluid. When this happens, the effects of an oxygen-enriched external environment, high velocity leakage, and loss of mechanical integrity must be addressed.

p. Eliminate rotation of seals and rotation against seats. Sealed parts that require rotation at assembly (such as O-rings on threaded shafts) can generate particles which may migrate into the flow stream. Particulate generation also occurs in ball valves where operation of the valve rotates a ball on a nonmetallic seat. A related phenomenon that may be described as "feathering" occurs when valve stems are rotated against some nonmetallic seats such as Kel-F®. Because of the mechanical properties of some nonmetallic materials, a thin, feather-like projection of material is extruded from the seat. The feathered material is more ignitable than the seat itself. Kel-F® and other nonmetallic materials subject to feathering should only be used with caution for seals and seats in rotating configurations. Ball valves are not recommended for oxygen systems because of their tendency to generate particulate and their fast opening times, which create rapid pressurization of systems.

q. Avoid thin walls. The walls between inner cavities or passageways and the outer surface of component housings may become so thin that stress concentrations result when pressure is introduced. Because geometries both inside and outside can be complex, it may not be obvious from drawings or even from direct inspection that such thin, highly stressed areas exist. If such walls become too thin, they may rupture under pressure loading. The energy released by the rupture can raise the temperature in the rupture zone. The failed section can expose bare, jagged metal that can oxidize rapidly and may heat enough to ignite and burn.

r. Be cautious of single-barrier failures. A single-barrier failure is defined as a leak in which only the primary containment structure is breached. Such a leak introduces oxygen into a region not normally exposed to oxygen. The materials or configuration of parts in this region may not be compatible with high-pressure oxygen. Any situation in which a single barrier may fail should be analyzed during the design phase. The single-barrier failure analysis may consist of an engineering evaluation of the configuration, including an analysis of the compatibility of materials exposed by the failure with the high-pressure oxygen. The purpose of the analysis should be to determine if a barrier failure is credible and if exposure of incompatible materials can create a hazard. If the hazard cannot be assessed adequately by analysis, a configurational test may be performed.

s. Be aware of seat shape and seals. Designs in which an O-ring seals on an unusual seat shape may cause increased wear or accelerated extrusion of the O-ring material and the generation of particulate contamination. Although the design of sealing interfaces is a necessary compromise, the design should use standard seat shapes as much as possible. Past experience has shown that elastomeric O-rings are successful in static environments but are usually poor choices in dynamic environments, and should only be considered in designs where the exposure to oxygen is minimized, such as line exposure. In some instances, PTFE with Viton as a backup (which exposes the most compatible materials preferentially to oxygen) has been used for seals where elastomers must be used and cannot be limited to line exposure. Rigid plastics such as Vespel® have en used as seats in valves and regulators; however, the noncompliance of the material requires a small contact area with a hard (metal or sapphire) mating surface to achieve a seal. An alternative to rigid plastics is to use a coined metal seat if the precautions to eliminate galling, discussed above, have been taken.

t. Allow sufficient seal squeeze to avoid O-ring extrusion. Standard manufacturers' dimensions and tolerances should be incorporated into designs unless an unusual overriding design constraint demands the change. Additionally, the dimensions of all parts in the valve assembly should be carefully inspected. Ideally, adequate gland size should be provided in the initial design.

u. Use metal-to-metal seals in some cases. Polymeric materials cannot be used as seals in valves that control the flow of hot oxygen at high temperatures and pressures, because they lose sealing properties, are easily ignited, and wear too rapidly. High pressures and high flow rates can produce side loads and oscillations on the poppet seal; these can cause metal deterioration by fretting or galling. (Galling is the more severe condition, because it involves smearing and material transfer from one surface to another.) Fretting and galling can cause several problems in oxygen systems. The valve poppet may seize, resulting in loss of function. The frictional heat of the fretting or galling may lead to ignition of the valve. The particles generated by the fretting or galling may cause malfunction or ignition of another component downstream. Where possible, the valve poppet should be designed for symmetrical flow so no oscillatory side loads are created. The symmetrical flow centers the poppet in the bore and maintains design clearances between the poppet and bore surfaces. For gaseous systems, it may be possible to reduce the volumetric flow rate (and thus the magnitude of oscillations and side loads) by installing an orifice. The orifice should be downstream of the poppet to minimize the pressure differential across the poppet. It is also possible to flexure-mount the poppet in the bore and to incorporate labyrinth seal grooves in the poppet surface. To minimize the possibility of ignition, poppet and bore materials should be relatively resistant to ignition by frictional heating. Both may be hardened by nitriding or a similar process to minimize material loss by fretting or galling.

v. Consider the effects of long-term operation, including the following:

(1) Cold flow of seals. Cold flow is a concern, especially for soft goods with little resiliency. With applied loads, these materials permanently deform, usually resulting in sealing loss.

(2) Seal extrusion (avoid extrusion-generated particulate). Generally, seals with low hardnesses tend to provide better sealing. However, the softer seals will not withstand high temperatures and pressures. When such seals fail, they often extrude, generating particulate. Pressure and thermal reversal cycles can also result in seal extrusion. Although silicone seals are not recommended, they may be found in existing oxygen systems. If found, careful examination during maintenance procedures is recommended, because excessive cross-linking of silicone elastomers in oxygen environments may occur, leading to embrittlement and degradation.

(3) High-temperature excessive oxidation of copper. Copper is often used for oxygen seals. It can provide a very reliable seal; however, at extremely high temperatures, the copper oxide that forms on exposed surfaces can dislodge from the substrate. The oxide is then likely to become a source of particulate.

w. Design equipment so that power losses, control pressure leakage, or other loss of actuation sources return the equipment to a fail-safe position to protect personnel and property in an accident.

x. Consider the effects of thermal expansion. Buckling can create component failures.

7.3 Design for Cryogenic Oxygen Systems. In addition to the design requirements for high-pressure and high-temperature oxygen systems in paragraph 7.2, specific considerations for cryogenic applications are described as follows. Liquid cryogens can easily vaporize and produce high-pressure regions in systems assumed to be at low pressure (liquid lockup); if these potential high-pressure conditions are not considered when designing the system, serious hazards can exist. (Refer to paragraph 10 for tankage considerations.)

7.3.1 Materials Guidelines. Materials requirements are similar to requirements for GOX. One additional consideration is that vaporization of LOX occurs around heat sources such as ball bearings; this increases ignition risks and requires compensation for possible elevated pressure.

7.3.2 General System Installation Guidelines. Design considerations relating to system installations are noted below.

a. Thermal conditioning of cryogenic systems is mandatory. A bypass flow path with pressure relief valve shall be provided. Thermal conditioning can be performed with liquid nitrogen or LOX. Carefully analyze system startup for LOX pumps, as cavitation from improper chill down can increase fluid pressures and damage parts (leading to premature failure of components) and can create startup instabilities (leading to ignition from frictional heating).

b. Avoid condensation on external surfaces because the cryogen can liquify air or freeze water and other vapors and create falling ice or other hazards.

c. Avoid condensation on internal surfaces because the cryogen can freeze water and other vapors.

(1) Long-term storage of LOX and extended cyclic fill operations may concentrate low volatile impurities in the storage container as a result of the loss of oxygen by boiloff. Therefore, the oxygen used on the basis of the original specifications may not be satisfactory. Pressure relief valves or other means should be designed to prevent the back aspiration of volatile impurities into storage systems.

(2) The contents of vessels should be analyzed periodically for conformance to the specifications to limit the accumulation of contaminants from cyclic fill-and-drain operations. An inspection and system warmup refurbishment shutdown cycle should be established, based on the maximum calculated impurity content of the materials going through the tank or system. This should allow frozen water and gas contaminants to vaporize and leave the vessels. Where practical, a mass balance of measurable contaminants should be made for all fluids entering or leaving the system or the component.

7.3.3 Design Specifications. The concerns are similar to those for high-pressure, high-temperature oxygen, with the addition of material embrittlement because of the low temperatures. Cracking and fractures of soft goods and metals can cause premature failures.

7.3.4 Hazard Considerations. Cryogenic hazards, such as cold injuries from exposure when handling equipment with LOX, shall be considered. Additionally, oxygen-containing equipment should not be operated over asphalt pavement because of spill hazards and the potential for ignitions from oxygen-enriched asphalt, which can be readily ignited because of its shock sensitivity. When use of LOX systems over asphalt cannot be avoided, all asphalt areas under uninsulated piping should be protected to prevent contact with oxygen.

7.3.5 Component Hardware and Systems Design Considerations.

a. Liquid lockup can occur, requiring special pressure relief protection.

b. Avoid fluid expansion regions in which the fluid can vaporize. If expansion is allowed to occur, the resulting fluid downstream will have two phases, gas and liquid, and the following situations could occur:

(1) Increased pressure caused by vaporization

(2) High surge pressures caused by liquid hammer effects (Mechanical damage as well as rapid compression heating and ignition of soft goods can occur if fluid hammer is not eliminated in oxygen systems.)

(3) Decreased performance of metering valves and other components sensitive to fluid properties

c. Avoid cavitation of rotating equipment, because the high pressures generated by the rapid vaporization during cavitation can exceed the rated capability of hardware. Additionally, dynamic instabilities can be created that allow rotating shafts and impellers to wear against housings, leading to failures from frictional heating.

d. Avoid geysering of LOX and GOX, caused by gas bubble formation in flowing liquid systems, because this can create rapid pressurization of soft goods, and it can create a fluid hammer condition with rapid overpressurization of components, leading to bursting of pressure-containing components.

e. Prevent hydrostatic over-pressurization of tanks and dewars during filling operations by using a full tricock valve system or similar overfill protection to maintain an adequate ullage area.

7.3.6 Electrical Design Guidelines. In addition to the guidance in Sections 5.1 b(9), (10), and (11) of this chapter, electrical wiring inside LOX tanks should be encased in hermetically sealed conduits or conduit inerted with helium or nitrogen gas. The instruments, switches, flow sensors, and electrical devices should be designed in modular structure and hermetically sealed, and inerting with nitrogen or helium is recommended.

7.4 Code Design Requirements. Several codes are applicable when designing, fabricating, and testing ground support equipment for oxygen use. This section provides a review of codes the designer must consider.

Note: This section does not attempt to duplicate all code requirements. It is the responsibility of the designer to refer to the appropriate codes. Additional requirements noted below were specified from extensive experience and can be found in other documents such as CGA G-4.0 (1987).

7.4.1 Liquid Oxygen Vessels - (for example: ASME 1995a). The safe containment of LOX requires particular attention to design principles, material selection, and fabrication, inspection, and cleaning procedures. The operation and maintenance of LOX vessels must be sufficiently detailed to ensure safe and reliable performance.

a. Liquid oxygen storage vessels include an inner tank to contain the liquid and an outer jacket containing either powder or vacuum insulation or a combined powder-inert gas insulation to reduce heat transfer to the LOX.

b. The construction, installation, and testing of LOX storage vessels should conform to requirements established by the Center Engineering Directorate and to the applicable codes and standards. Typical oxygen storage vessel specifications are given in Appendix D.

c. The tank outlet should be clearly marked and should indicate whether the contents are gaseous or liquid. The hazard potential of opening the system will differ significantly between pressurized gases and liquid. Emergency isolation valves that function to restrict liquid flow from the tank in case of a line failure downstream should be provided as close to the tank annulus as possible. The emergency valve should be quick-acting and must be operable under conditions of heavy liquid spillage. A label shall be provided, listing the contents, capacity, operating pressures, direction of flow, dates of proof tests, and dates of in-service inspection and recertification (NASA JSC SE-S-0073 1988; NHB 1700.1).

d. Tank truck specifications for LOX are included in NASA JSC SE-S-0073; NASA JHB 5322B; Compressed Gas Association (CGA) 1985; CGA 341 1987; 49 Code of Federal Regulations (CFR) 171-179; and paragraph 11. The vibration and sloshing of LOX should be minimized by careful selection of running gear and placement of inner tank baffles and supporting systems. Vibration can be reduced by controlling unwanted expansion and contraction.

e. The tank pressure or liquid should not open the isolation valves. The valves should fail safely in a closed position on failure of the operating fluid supply. The emergency isolating valve should be in addition to any normal isolating valve required for operation. Top-entry connections that extend into the liquid should also be protected by emergency valves.

7.4.2 Piping Systems.

7.4.2.1 General.

a. All piping systems should be designed in accordance with NASA specifications and the latest issue of the applicable ANSI code (primarily Sections 31.10 and 31.3). The design should be based on the pressure and temperature of the system and the pressure and temperature limitations of the materials selected. All local, state, and federal codes shall be considered (refer to federal specifications and codes in Appendix E).

b. High-pressure oxygen shall not be transmitted in buried piping. Underground piping cannot be inspected as readily as visible piping for leaks, corrosion, or other defects. Oxygen piping and equipment shall be installed at a distance from electric power lines or electrical equipment, far enough so that any failure of the power lines or electrical equipment will not permit contact with the oxygen piping and equipment. All oxygen piping must be adequately supported to avoid excessive vibration and to prevent deterioration by friction.

c. Material used in pressure-containing piping systems and piping elements should conform to listed or published specifications covering chemical, physical, and mechanical properties; method and process of manufacture; heat treatment; and quality control and should otherwise meet the requirements of the Center Design Engineering Directorate.

d. Piping and pressure-containing components should be consistent with the accepted design philosophy, substantiated by the following:

(1) Stress analysis to predict safe and reliable operation per codes

(2) Pressure testing per codes to verify predicted performance

(3) Extensive, successful service experience under comparable design conditions with components that are similarly shaped and proportioned

e. All factors must be considered when establishing safe velocity limits. A safe piping system, in addition to being designed and installed in accordance with all applicable codes and regulations, should further meet the special requirements for oxygen services. These special requirements include certain velocity restrictions and material specifications; special criteria for design and location; correct location and specification of joints, fittings, safety devices, and filters; and thorough and adequate cleaning of the components and the system for oxygen services. Factors that primarily effect velocity in oxygen piping systems are pipe material, gas-operating temperature and pressure, and restrictive configurations such as valves or orifices.

f. Piping, tubing, and fittings should be suitable for oxygen service and for the pressures and temperatures involved (Department of Transportation (DOT) (DOT 1976)). Materials are described in paragraph 6 and Appendix B. Even when the system is built entirely of suitable materials, problems can develop if the pressurized gas flow is either started or stopped abruptly. Two main events cause problems:

(1) Flowing gas undergoes compression heating at elbows, dead ends, and valves—any place it is suddenly stopped. The resulting temperature rise can be sufficient to ignite all polymeric materials commonly used in GOX systems, including Teflon®.

(2) Mechanical shock to the system may dislodge solid particles. If these are caught up in the flow and impinge on a surface, hot spots will result that may cause ignition.

7.4.2.2 Liquid-oxygen piping systems.

a. Many liquid-oxygen lines are vacuum-jacketed or insulated to reduce the heat input. The jacket design should allow the jacket to follow natural thermal displacement of the inner line. Piping systems should be sufficiently flexible to prevent thermal expansion or contraction from causing piping failures or leaks. Piping systems that are used infrequently or that are short may be uninsulated. Long pipe runs should be vacuum-insulated. Bellows sections in vacuum jackets should be used to compensate for contraction and expansion.

b. Horizontal pipelines may experience cryogenic bowing because of stratified flow or because a single liquid layer exists on only the bottom of the pipe. The large forces normally generated by bowing should be considered when designing pipe-guide supports for bellows expansion joints. The design of pipe-supporting systems should be based on all concurrently acting loads transmitted into such supports. These loads should include weight, service pressure and temperature, vibration, wind, earthquake, shock, and thermal expansion and contraction. All supports and restraints should be fabricated from materials suitable for oxygen service.

c. Each section of liquid-oxygen piping capable of being isolated should be considered a pressure vessel with a source of heat into the line. A heat leak can cause the

pressure to increase significantly as trapped fluid warms to atmospheric temperature. Therefore, each such section must be equipped with protective devices for overpressure control, particularly from overpressures caused by insulation failures. The overpressure protection devices must be located in such a manner that all parts of the system are protected from overpressure.

d. Low points (traps) on liquid discharge piping are to be avoided to prevent accumulating contaminants and trapping liquid. If traps are unavoidable, low-point drains should be provided and designed so that all fluids drain on oxygen-compatible surfaces. All tubing ends, fittings, and other components used in oxygen systems should be protected against damage and contamination.

e. Where practical, avoid cavitation in LOX; where impractical, use the preferred materials listed in Schmidt and Forney (1975).

7.4.2.3 Gaseous oxygen piping systems.

a. The primary concern with high-velocity flow conditions is the entrainment of particulates and their subsequent impingement on a surface, such as at bends in piping. The effects of extremes in flow velocity and pressure are also concerns. Material erosion or ignition can be caused by entrained particulate impact and abrasion, erosive effects of the fluid flow, or to both.

b. Until a more quantitative limit can be established, the following practices are recommended:

(1) Where practical, avoid sonic velocity in gases; where impractical, use the preferred materials listed in Schmidt and Forney (1975).

(2) If possible, avoid the use of nonmetals at locations within the system where sonic velocity can occur.

(3) Maintain fluid system cleanliness to limit entrained particulates, and perform blowdown with filtered, dry gaseous nitrogen (GN_2) at maximum anticipated pressure and flow before wetting the system with oxygen.

c. Piping systems should be designed to ensure the GOX in the system does not exceed specified velocities. Places where fluid velocities approach 30 m/s (100 ft/s) should be reviewed for particle impact ignition sensitivity (refer to Appendix B and CGA G-4.4 1984).

d. For use at pressures above 4.83 MPa (700 psig), oxygen piping and fittings should be stainless steel, nickel alloys, or copper alloys (Laurendeau 1968), because of ignition susceptibility. Monel® is approved for tubing, fittings, and component bodies (Schmidt and Forney 1975). The choice of piping and fitting materials should take into consideration the external environment.

7.4.3 Systems Connections and Joints.

a. Welded, brazed, or silver-soldered joints are satisfactory for oxygen systems. Such joints, however, if left in the as-formed condition, may have slag or surfaces that can trap contaminants. Welds shall be specified as full penetration so that the contracting surfaces are joined to limit particulate entrapment.

b. Exposed weld surfaces should be ground to a smooth finish for ease of cleaning. With brazed and soldered joints, special care must be taken to ensure surface cleanliness, close and uniform clearance, and full penetration of the joint.

c. Materials used should be documented for compatibility with the total environment of pressure, temperature, flow rates, and exposure time profiles. Material for joints and fittings should be similar to the piping metal to avoid developing electrical couples. When the use of different metals cannot be avoided, considerable care must be taken when removing the fitting or connection so any grit or contaminant resulting from the electrical couple is not left in the piping.

d. Vessel connections to rigidly mounted test facility piping should use supported and anchored flexible metal hose insulated for low-temperature service at the desired pressure. Recommendations for flexible hoses include a maximum allowable slack of about *5* percent of the total length. For greater safety, the hose restraints should be at least 50 percent stronger than the calculated impact force on an open line moving through the flexure distance of the restraint.

e. Piping should be assembled by welding, except at connections to valves, etc., where flanged joints are required. Welding procedures, welder qualification tests, welding operations, and weld testing should be in accordance with the ASME (1995c) and ANSI codes. (KSC-SPEC-Z-0003 1992; KSC-SPEC-Z-0004 1993). Backup rings should not be used because of the difficulty of recleaning the system.

f. Transition joints such as aluminum to stainless steel should not be used in the piping of LOX transportation systems. The large temperature cycles and severe mechanical jolts have frequently caused failures of such joints.

g. Fill connections for loading and transfer from transportation systems shall terminate in the fixed ends of hose unions that use a unique design configuration (for example, keyed) to prevent filling oxygen tanks with other fluids. Check valves should be placed in the fill lines to prevent the tank from draining onto the ground should the fill lines fail.

h. The oxygen gas trailers and transfer connections must use a unique design configuration to prevent or minimize connecting with incompatible gaseous fluids or similar fluids at different pressure levels. The connectors and fittings to be disconnected during operations should be provided with tethered end plates, caps, plugs, or covers to protect the system from contamination or damage when not in use.

7.4.4 Components.

7.4.4.1 Valves.

a. All valves should be accessible for operation and maintenance and should be protected from accidental damage by nearby activities, such as vehicle movement.

b. Valves in GOX distribution systems should be kept to a minimum and should be of good quality because they have mechanical joints that are susceptible to leaks. All valve materials must be suitable for oxygen service, and material selection must meet velocity criteria. Stems, packing glands, and other parts vital to proper valve operation should be of materials that will not readily corrode. The stem packing should be oxygen-compatible (for example, NASA JSC 02681 1982).

c. Valves that, from a safety viewpoint, are suitable for high-pressure GOX service may also be suitable for high-pressure LOX service. Adaptation for liquid service should consider possible mechanical problems such as contraction strains, icing, and glass transition temperatures of polymers. Extended-stem gate, globe, or ball valves are satisfactory. Valves must be provided with venting features to prevent trapping cryogenic liquid.

d. Vessels used as test facility components should have remotely operated fail-safe shutoff valves located close to the loading vessel. All large-capacity storage vessels should have remotely operated fail-safe shutoff valves. A manual override should be considered in case of a power failure.

e. Check valves should not be used when bubble-free tightness is required. Check valves may only be used if a safety pressure margin is maintained well above the maximum allowable working pressure. If the maximum allowable working pressure must be higher than the supply pressure, two shutoff valves with a bleed valve between them must be used.

f. The safety of laboratory operations requires that bottled gases not be contaminated. Suppliers of bottled gases specifically prohibit contaminating gases in their bottles. Bottled gases have been contaminated because check valves in interconnected systems leaked, so the valves should be regularly checked and the contents of the pressure vessels analyzed for contamination.

g. Check valves might be completely tight at the start of service but develop leaks later. In fact, a single check valve is often more leakproof than multiple check valves because the larger pressure drop closes it more tightly.

h. Isolation valves should operate either fully open or fully closed and never in a throttling or regulating mode.

i. Where required, a bypass should be provided around isolation valves; the bypass must be of suitable materials because of the high velocity involved. If remotely operated bypass valves are used, the valves should be fail-safe in case of power loss and should close on a system emergency shutdown signal.

7.4.4.2 Pressure-Relief Devices.

a. Relief valves or rupture disks shall be installed on tanks, lines, and component systems to prevent overpressurization. The capacity of a pressure-relief device should be equal to that of all the vessel and piping systems it is to protect. These devices must be reliable, and the settings must be secured against accidental alteration. Relief valves and similar devices should not be considered to be secondary and passive components in the test hardware design; it should be assumed that they will function at some time. Personnel safety and hardware damage should be primary design considerations. Relief valves shall be functionally tested to verify design requirements are satisfied, including testing in both the static and dynamic states. Relief valves shall be functionally tested to verify design requirements are satisfied, including testing in both the static and dynamic states. Relief valve riser pipes on high pressure oxygen systems shall be analyzed for resonant tuning.

b. All sections of the pipeline system shall be adequately protected by pressure-relief devices and should have an adequate manual vent valve to allow for blowdown and purging. All

equipment in any oxygen system that may be removed for inspection, maintenance, replacement, etc., should be provided with a vent valve for blowdown and purging.

(1) Safety valves, vent valves, and associated piping should be constructed entirely of approved materials.

(2) Inherent ignition hazards are associated with self-activating relief devices in oxygen systems. Therefore, relief devices and any vent lines connected just downstream should be built from the most ignition-resistant materials available and positioned in remote locations or isolated from personnel by barriers or shields.

c. For protection against rupture hazards, all enclosures that contain liquid or that can trap liquids or cold vapors should have rupture disks or relief valves installed.

d. Gaseous oxygen tube trailers should be equipped with normally closed safety shutoff valves that require power to remain open and will automatically return to full closed when the power is removed. These safety shutoff valves should never be used for flow control. Manually operated main shut-off valves should also be used to isolate the trailers and to control flow, if required.

e. Manual bypasses to act as pressure-equalizing valves should be provided around all manual pipeline valves.

f. Vent and safety valves should be located outdoors to discharge in a safe area. If they cannot be located outdoors, the discharge should be piped outdoors. Lines leading to and from relief devices should be of sufficient size to ensure the system will not be overpressurized. Piping and component orientation is critical and consideration must be given to water aspiration and/or rain from entering a system and thereafter freezing out against relief devices. Also bug screens, thrust balancing, and the potential to backstream contaminated water into systems should be addressed. Discharge lines should be fabricated from ignition-resistant materials. Outlet ports should be checked to ensure they cannot inadvertently become plugged. Resonant frequency or coupling in captured vent systems, which can aggravate a failure, should also be considered.

g. The calculations that form the basis for pressure relief system design shall be provided. Such data should include:

(1) The maximum operating pressure under both normal and abnormal operating conditions

(2) The location and condition of relief devices

(3) The suggested methods of installation

(4) The testing frequency

(5) The possible hazards caused by system operation

(6) The materials of construction

h. Safety devices shall be checked before use to prevent possible installation of incorrect pressure-rated devices.

i. The minimum relieving capacities of the safety devices should be as determined by the flow formulas in applicable codes and specifications (for example: ASME 1995b; ANSI/ASME B31.10 1986; Schmidt and Forney 1975; National Academy of Sciences 1973; KHB 1710.2A(V2)). Safety relief valves and frangible disks shall be designed and installed in accordance with applicable codes and specifications (for example: DOT regulations, especially 49 CFR and CGA S-1.2 1980).

7.4.4.3 Cylinders. Acceptable flexible links for connecting cylinders are as follows:

a. Stainless steel tubing, which may be formed into loops to provide enough flexibility for easy hookup, is also acceptable. This is the preferred method.

b. Flexible metal tube or pipe such as bellows sections are also recommended. Teflon ® -lined flexible hoses may be used if particular care is exercised to ensure that pneumatic impact ignitions cannot occur. The risks may be minimized if procedures avoid operator error and the design incorporates a long, nonignitable metallic housing at the downstream end of the flexible hose. Proper restraining cables and anchoring cables are required for flexible hoses. All-metal bellows are difficult to clean, and the cleaning fluids cannot be completely rinsed off, leading to corrosion.

7.4.5 Electrical Wiring and Equipment (for example: NFPA 53 (l994). Electrical equipment and fittings used in oxygen-enriched atmospheres should be designed for use at the maximum proposed pressure and oxygen concentration. Further guidelines for the installation of electrical wiring and equipment for use in oxygen-enriched atmospheres are found in NFPA 53 (1994) and may be applied with the appropriate engineering discretion and with the approval of the cognizant authorities.

8. CLEANING

8.1 General. System cleanliness is critical in oxygen components and systems because contaminants may cause functional anomalies or ignition. Components used in oxygen systems should always be reasonably clean before initial assembly to ensure contaminants do not damage the hardware. After initial mockup assembly, oxygen systems must be disassembled and thoroughly cleaned, reassembled, leak tested, and purged with clean, oil-free, filtered, dry, GN_2 or helium before they are wetted with oxygen.

a. Cleaning should ensure the removal of contaminants that could cause mechanical malfunctions, system failures, fires, or explosions. This specialized service must be performed by properly trained and qualified individuals at approved facilities. Effective cleaning will:

(1) Remove particles, films, greases, oils, and other unwanted matter

(2) Prevent loose scale, rust, dirt, mill scale, weld spatter, and weld flux deposited on moving and stationary parts from interfering with the component function and clogging flow passages

(3) Reduce the concentration of finely divided contaminants, which are more easily ignited than bulk material

b. Cleaning aids and materials; such as gloves, brushes, wipers, protective garments, packaging materials, and chemicals; must be tested and approved before use in any cleaning operation.

c. Oxygen systems and components should be thoroughly cleaned in accordance with established NASA and industry procedures (ASTM G 93 1985; Banakitis and Schueller 1972; CGA G-4.1 1987; MIL-STD-1246; NASA JHB 5322; SSC 79-0010; KSC-C-123G; MSFC-PROC-1831; MSFC-PROC-1832).

Note: Under The Clean Air Act Amendments of 1990 and the U.N. Montreal Protocol, the use of chlorofluorocarbons (CFC), 1,1,1-trichloroethane, and other ozone-depleting substances are being phased out. Applicable specifications and procedures should reflect these changes. Alternative cleaners for oxygen components and systems will be required.

d. Whenever possible, oxygen-system cleaning should begin by disassembling all components to their individual parts. In-situ cleaning of systems and flow cleaning of components is generally ineffective. If cleaning is attempted by flowing solutions through a component, vulnerable internal parts may be damaged by cleaning solutions. For example, the cleaning process may cause unintended stem rotation in a bearing in a nonrotating stem valve, destroying it and producing an ignition hazard. Contaminants trapped in component recesses are not effectively removed, and the cleaning solutions can become entrapped in the same areas, thus increasing the contamination in the system. Cleaning solutions should not leave any cleaning agent residues.

e. The choice of organic cleaning solvents and associated procedures is currently being reviewed and modified. In the past, the organic solvent of choice has been CFC 113 (trichlorotrifluoroethane, MIL-C-81302B (1987), amendment 1, type II), because it is an ideal solvent for performing particle count and nonvolatile residue analysis. It is also nonflammable and relatively nontoxic. However, production of CFC is being phased out, because the release of these compounds into the atmosphere damages the environment. Alternative cleaning solvents are being developed and investigated and will probably come into use in the near future. These include the new hydrochlorofluorocarbons (HCFC), deionized (DI) water, and isopropyl alcohol (IPA). The effects of these changes on the cleaning of oxygen systems are being assessed. Cleaning procedures, desired cleanliness levels, and cleaning intervals must be established for each system or component based on construction materials, design configurations, and operating parameters. The most practical cleaning method is determined by the types, locations, and quantities of contaminants, and the desired cleanliness level. In addition, the item or component configuration (such as dead-end ports) must be investigated so cleaning operations can be adequately performed.

(1) The threshold level of contamination that markedly increases ignition hazard has not been established. Therefore, good practice is to be conservative by specifying a cleanliness level equal to or better than that which experience has shown to be acceptable for the application.

(2) When a component is removed from an oxygen system, it should be inspected to determine its cleanliness. This provides an opportunity to determine the cleanliness of the system and to establish cleaning intervals and levels. For example, when a filter is removed it

should be back-flushed, and the trapped debris should be analyzed. Based on the results of the analysis, appropriate action can be taken.

(3) The cleaned oxygen systems and components should be inspected in accordance with the guidelines established by NASA (for example, NASA JHB 5322, or another applicable center document).

Note: The use of IPA in cleaning oxygen systems was reported to have caused a fire in an oxygen system because the IPA was not thoroughly removed in the cleaning process (OMB 0704-0188 1993). Additionally, flammable cleaning solvents will be absorbed by soft goods; the effects of this absorption must be assessed for oxygen systems.

8.2 Cleaning Safety

8.2.1 Cleaning Operations.

a. A responsible individual shall direct cleaning operations. Operators shall be instructed in the safe use of the cleaning agents and all applicable hazard communication standard requirements such as Material Safety Data Sheets (MSDS's). Operators shall also be given written standard operating procedures (SOP's) that identify safety considerations wherever special safety considerations are involved.

b. The use of hazardous cleaning chemicals shall be kept to a minimum.

c. Appropriate spill response training and spill control equipment must be provided for the chemical types used.

d. Used cleaning solutions shall be disposed of in accordance with appropriate hazardous waste regulations.

8.2.2 Ventilation.

a. All areas where cleaning compounds and solvents are used shall be adequately ventilated to protect operators from hazardous airborne contaminants. Local exhaust ventilation, together with enclosures, should be used whenever feasible. General dilution and general ventilation provide much less protection for personnel and result in contamination of clean room atmospheres.

b. Outdoor cleaning operations should be located so operators can work upwind of solvent vapor accumulations.

c. Chemical containers shall be clearly identified, labeled, and sealed when not in use.

d. Some cleaning chemicals can break down into toxic compounds when heated to decomposition temperatures.

e. Some cleaning chemicals when heated, such as by arc heat, heat at the weld joint, or ultraviolet rays from welding can decompose halogenated solvents to produce highly toxic gases. Parts to be welded must be free of cleaning chemicals. Appropriate respiratory protection must be used when performing operations involving personnel exposure to heated chemicals.

Respiratory protective equipment should be used as a supplement to engineering controls as necessary to prevent or control exposures of personnel to airborne contaminants. Engineering controls such as enclosures, local exhaust ventilation, or vapor degreasers should be used as the primary means of exposure control.

f. Atmospheric monitoring (area and/or personal, as applicable) may be required to evaluate exposures to hazardous airborne contaminants and/or to detect otherwise dangerous levels of hazardous materials in the atmosphere.

8.2.3 Personal Protective Equipment.

a. Personal protective equipment; such as face shields, gloves, respiratory protection, and lab aprons; shall be worn in accordance with applicable NASA safety guidelines, Occupational Safety and Health Administration (OSHA) regulations, and MSDS's.

b. Operable emergency eye wash units and deluge showers must be provided in the immediate areas where chemicals are used.

c. Appropriate fire extinguishers must be provided where flammable materials are used.

8.3 Cleaning Procedures

a. No single cleaning procedure will meet all cleanliness requirements. Visual cleanliness is not a sufficient criterion when dealing with oxygen systems, because of the hazards associated with contaminants invisible to the naked eye. General oxygen-system cleaning procedures are discussed in ASTM G 93 (1985).

b. Items to be cleaned should be completely disassembled before cleaning when possible. Piping systems should be cleaned and inspected before assembly. Components or parts that could be damaged during cleaning should be cleaned separately. Calibration-sensitive items should be processed by qualified personnel.

c. Preparing components for oxygen service includes degreasing, disassembling and examining, hydrostatic testing (if necessary), precleaning, inspection, precision cleaning, reassembly, functional testing, and packaging. Special cleaning procedures may be required to remove heavy oil or grease, rust, or welding discoloration and slag. Depending on the design of the component or system, special procedures may also be required.

(1) Degreasing. Degrease metal parts with a degreasing agent by immersing, spraying, or vapor-rinsing the part until all surfaces have been thoroughly flushed or wetted. Assist the degreasing action with suitable brushes if necessary.

Note: This step is required only for heavily oil- or grease-contaminated items. Alkaline cleaners used to preclean metallic parts and detergents used to preclean nonmetallic parts will effectively remove small amounts of grease and oil.

(2) Disassembling and Examining. Components should be disassembled and their parts grouped according to the method of cleaning. During disassembly, individual parts should be examined to assess their serviceability. If sealing surfaces are damaged or cracked, the component must be repaired or replaced. Special attention should be directed to nonmetals. On

used and long-stored components, remove and discard all nonmetallic parts if possible, and replace them with new, like parts. Replacement materials must have oxygen compatibility at least as good as that of the original materials.

(3) Hydrostatic Testing. Any required hydrostatic testing on hard lines, flexible hoses, and pressure vessels should be completed before precleaning.

(4) Precleaning. Various commercially available, cleaning solutions can be used in conjunction with ultrasonics to remove firmly attached contaminants. Commonly used cleaning solutions include alkaline solutions, acid solutions, mild alkaline liquid detergents, and rust and scale removers. The cleaning solutions used depend on the material to be cleaned. Stainless steels (300 series), Monel® alloys, Inconel® alloys, and Teflon® are usually cleaned in an alkaline solution and then in an acid solution. Carbon steel is cleaned by a rust and scale remover, if required, and then in an alkaline solution. In severe cases of rust or corrosion, carbon steel may be sand or glass-bead blasted. Copper and brass are cleaned in alkaline solution, then acid pickled. Aluminum and nonmetals are cleaned in liquid detergent. Other specialized materials may require different cleaning techniques; materials should not be cleaned in solutions with which they react significantly. Assist chemical cleaning with mechanical cleaning when necessary. Visually inspect all items and repeat precleaning if necessary. These typical steps in the precleaning operation give insight into the quality and thoroughness necessary for cleaning oxygen systems.

(a) Chemical cleaning. Chemical cleaning may be a single-step or multi-step process, depending upon the material involved.

Note: Parts should be handled only with approved, clean gloves from this point on.

(i) Detergent cleaning. Mild detergent is usually used to clean nonmetallic and aluminum parts. Spray and/or immerse the items in a detergent solution for a specified period of time. Assist cleaning action by brushing parts with suitable brushes and by using ultrasonic cleaners to aid in contaminant removal.

(ii) Alkaline cleaning. Corrosion-resistant metals and Teflon® are usually cleaned with an alkaline cleaning agent. Spray, soak, and/or immerse items in a solution of alkaline cleaner for a specified period of time. Assist cleaning action by brushing the parts with suitable brushes and by using ultrasonic cleaners.

(iii) Acid cleaning. Place nonwelded stainless steel parts or other acid-resistant metal parts in an acidic cleaning solution and allow them to soak for a specified period of time. Spray parts with acidic cleaning solution if necessary. Assist cleaning action by brushing parts with suitable brushes or by using ultrasonic cleaners.

(iv) Rinsing. After the detergent, alkaline, or acid cleaning; thoroughly spray, rinse, or immerse parts in DI, distilled, filtered water to remove all the cleaning agent.

(v) Acid pickling. Acid pickling is used to remove welding discoloration and slag. Place newly welded stainless steel parts in a

pickling bath, typically 3- to 5-percent hydrofluoric and 15- to 20-percent nitric acid solution, for about 3 to *5* minutes. Brush welded areas with stainless steel brushes if necessary to remove welding slag. An acid paste shall be used to remove weld discoloration. After pickling, remove parts and rinse them thoroughly with water.

Note: Caution, nitric acid pickling of copper or brass can result in nitrogen dioxide emissions. Local exhaust ventilation must be used as necessary to prevent exposure of personnel to this highly toxic gas.

(b) Drying. Drying can be accomplished by several means.

(i) Blowdry components with filtered, dry air or nitrogen.

(ii) Use drying ovens, or heated nitrogen or compressed air purge.

Note: Care shall be taken when drying after HCFC-based solvent cleaning, because acid formation has been shown to promote stress corrosion cracking in pressure vessels.

(iii) Flush successively with a clean hydrophilic organic solvent, such as IPA, and a clean hydrophobic organic solvent.

Note: Care shall be taken to thoroughly dry system or components after IPA is used because IPA is flammable and will ignite and burn in oxygen systems (OMB 0704-0188 1993).

(5) Inspecting. The parts shall be visually inspected under a strong white light for contaminants, including lint fibers. Visual inspection will detect particulate matter larger than 50 μ as well as moisture, oils, and greases. If the parts are visibly clean, they may be sent for precision cleaning.

(6) Precision Cleaning.

(a) Degreasing. At ambient temperature, the parts are cooler than the vapors in the vapor degreaser. As they are lowered into the vapor, the vapor condenses on the parts. The condensate collecting on the parts helps remove greases, oils, and particulate. When the temperature of the parts is equal to that of the vapors, condensation ceases. The parts are then lowered into the ultrasonic tank for ultrasonic cleaning. After ultrasonic cleaning, slowly lift the parts into the vapor region. They are again cooler than the surrounding vapor, and condensation occurs. When condensation ceases, slowly remove the parts from the degreaser.

(b) Final rinsing. Thoroughly rinse the parts with distilled solvent from the distillate side of the vapor degreaser.

(c) Cleanliness verification. This step is performed in conjunction with the final rinsing. Rinse the parts with enough distilled solvent to obtain a reasonably sized sample.

(i) Typically, 0.1 m^2 (1 ft^2) of surface area is rinsed with 100 ml of solvent. Collect this solvent in a clean sample beaker.

(ii) Filter the sample in the beaker through a 0.45- μ filter. Size and count the particulate.

(iii) Evaporate the filtrate in a clean, preweighed tare dish to determine the amount of nonvolatile residue left in the tare dish.

(iv) Typical NASA cleanliness specifications are given in Table 8-1 (NASA JHB 5322B 1994). The maximum allowable nonvolatile residue on parts used for oxygen service is normally 1 mg/0.1 m^2 (1 mg/ft^2). Particulate requirements for specific components and systems depend on the application; levels 50, 100, and 300 are most common.

(v) If parts fail to meet the required specifications, the precision cleaning must be repeated. Precleaning does not normally have to be repeated.

(d) Drying. After the parts have been verified clean, dry them with filtered, dry, compressed air or nitrogen.

(e) This section primarily addresses the use of CFC-113 as a solvent. The use of CFC's is being eliminated; therefore, new precision cleaning procedures are being evaluated and will eventually replace those listed in this section.

(7) Component reassembly. When reassembling the system or components, only clean tools shall be used. The operator shall wear clean, lint-free gloves and outer garments consistent with the class of the reassembly area. Small components shall be assembled in a clean, dust-free environment. Keep all openings and clean surfaces covered with plastic film until the system has been assembled.

(8) Functional testing.

(a) Leak-test the assembled component with oxygen-compatible leak-check solution while component is being pressurized with clean, dry air or nitrogen.

(b) Apply final operational tests as required at rated pressure and flow rate. (Nitrogen must be used for greater safety in the operational tests.)

(9) Packaging. Items cleaned for oxygen service are double-bagged as soon as possible after cleanliness verification is obtained. The inner bag protects the cleanliness of the part. The outer bag is used primarily as a vapor barrier and to protect the inner bag.

(a) Inner bag. After a part has been cleaned, it shall be bagged in an oxygen-compatible film. The film used for bagging oxygen system parts must be as clean as the item being packaged. FEP Teflon® or CFC (Aclar®) film is normally used for the inner packaging.

(b) Outer bag. The outer bag is commonly polyethylene. It protects the inner bag and the part from abrasion, particles, and moisture.

(c) Label. A label should be affixed to each bagged part to document the cleanliness level (see paragraph 8.6).

8.4 Clean Assembly of Components and Systems. Even the best-designed oxygen systems can contain hazardous ignition sources if they are fabricated or assembled incorrectly. Recommended techniques for clean assembly and inspection to verify correct fabrication are described in this section. Careful assembly is extremely important for high-pressure oxygen systems because contaminants generated during assembly are a potential source of readily ignitable material. Elimination of all contaminants is highly desirable; however, complete elimination is rarely feasible in complex assemblies such as nonmetallic seals, threads, screw lock plugs, press fits, welds, soldered and brazed joints, and lubricants. Careful assembly procedures can minimize the quantity of contaminants remaining in a system and, thus, the potential for contaminant ignition.

8.4.1 Maintaining Cleanliness During Assembly. Procedures for system and component assembly or reassembly after cleaning must be stringently controlled to ensure that the required cleanliness levels are not compromised. All components requiring reassembly (such as valves, regulators, and filters) shall be reassembled in a clean room or flow bench. Personnel shall be properly attired in clean room garments and gloves. All tools used in the filtered environment must be cleaned to the required levels. Assembly or reassembly of systems should be accomplished in a manner that minimizes system contamination. Components should be kept in clean bags until immediately before assembly. One technique commonly used is to build up the system as subassemblies, using the same techniques as for components (such as in a filtered-air environment). When the size or location of a system precludes this practice, a low-pressure purge of the system by a clean, inert gas during reassembly or a portable clean tent can be used to reduce contamination.

8.4.2 Assembling Seals. Designs that allow or cause cuts or abrasions to in-place seals during assembly can cause feathering of O-rings. This feathering will create contaminants and can set up future contaminant generation, as the seal will continue to shed particles during its functional life. Seals should not be forced into bores or over shafts without adequate chamfers. These parts shall be inspected for burrs and sharp edges before they are assembled. A chamfer will always have a sharp edge unless it is specifically removed. Hardened steel may have a very pronounced sharp edge at the intersection of the chamfer cut and the outer diameter of the shaft. Installation of an O-ring over threads with an outer diameter exceeding the inside diameter of the O-ring should be avoided if possible. If no alternative exists at the assembly stage, the assembly specifications should require additional cleaning after the O-ring and threaded part have been assembled and before the components are installed in the next level of assembly. A light coating of compatible seal lubricant should be used to ease assembly.

8.4.3 Threaded Assembly. Care should be taken when assembling threaded connections, because contaminants can be generated in oxygen systems as the threads are engaged and tightened (see Appendix C, Figure C-6).

8.4.4 Deformable Parts. Parts such as screw-locking devices, which are deformed by other parts during assembly, may generate particulate. These parts are usually nonmetallic inserts. Their use should be limited as much as possible, and their installation should be sequenced so that they are driven in once only. Further assembly and disassembly increases the amount of particulate created.

8.4.5 Press Fits. Press fits generate particulate during their assembly from the relative motion of the two highly loaded surfaces. The particulate can be partially removed by cleaning the joined parts immediately after pressing them together; this step should be called out on the

subassembly drawing. Assembly procedure documents should ensure that the installation of press-fit, push-fit, and threaded valve parts into housing bores is performed with the housing inverted (bore opening pointing down), so contaminants generated during assembly fall away from the component rather than into flow paths. Cleaning components with press-fit parts is extremely difficult. These parts should never be submerged into a cleaning solution or bath, as the cleaning solution enters between the two press-fit parts, leaches out later, and becomes a contaminant.

8.4.6 Welded, Soldered, and Brazed Joints. If left in the as-formed condition, welded, soldered, and brazed joints may leave slag, roughness, porosity, or cracks that can generate or trap contaminants. Such joints should be minimized in high-pressure oxygen components. When welds cannot be avoided, they should be specified as full-penetration so that all contacting surface areas are joined. The use of full-penetration welds prevents entrapment of particulate and eliminates uncleanable, blind surfaces. Exposed weld surfaces should be ground to a smooth finish to facilitate cleaning.

8.4.7 Burrs. Removal of burrs and sharp edges is of critical importance in high-pressure oxygen systems. Burr removal in small-diameter internal passageways at the intersection of cross drills is a common problem. The best results have been obtained with small, motorized grinding tools and with electrical discharge machining. A borescope or other inspection tool should be used to verify burr removal.

8.4.8 Lubricants. Lubricants shall be used whenever they are required to reduce abrasion and damage to seals during assembly and to enhance the operational sealing or sliding of parts. Lubricants should be applied lightly, and excess lubricant should be removed to prevent future migration. If a lubricant migrates into an area that should not be lubricated, it can cause functional anomalies, as when regulator control mechanisms fail to respond properly because of contamination by excess lubricant. Hydrocarbon-based lubricants must not be used in high-pressure or LOX systems because they can easily ignite; the incorrect use of hydrocarbon-based lubricants is a common cause of oxygen system fires. The best lubricants for compatibility with high-pressure oxygen are highly fluorinated materials. However, some highly fluorinated lubricants are shock-sensitive in high-pressure and LOX, so compatibility testing is always required if test data are not available. Even the best lubricants can react with oxygen when system design limits on temperature, pressure, or pressure rise rates are exceeded.

8.5 Record Keeping. Record keeping is especially critical for equipment in oxygen service. At a minimum, labels must specify clean level and what cleaning specification was used.

Cleaning Level	Particle Size Range (μm)	Number of Particles[b]
300	<100 100 - 250 >250 - 300 >300	Unlimited 93 3 0
100	<25 25 - 50 >50 - 100 >100	Unlimited 68 11 0
50	<10 15 - 25 >25 - 50 >50	Unlimited 17 8 0
NVR (Nonvolatile Residue) Level		
Level	Maximum Quantity NVR[b]	
A	1 mg	

[a] NASA JHB 5322B (1994)
[b] Per 0.1 square meters

Table 8-1 Typical Maximum Allowable Particles for Different Cleaning Levels[a]

9. OPERATING PROCEDURES

9.1 General Guidelines. Standard operating procedures (SOP's), with checklists as required, shall be developed. The SOP's should be prepared by persons familiar with the work being done and should be reviewed by personnel experienced in oxygen use. SOP's for all hazardous operations should be reviewed by the designated safety authority. Occupational health personnel should be involved in the review cycle when operational procedures involve potential health hazards. The SOP's should be implemented by line management. SOP's should provide for the control of hazards to an acceptable risk and should be reviewed periodically for observance and improvement. The procedures should include:

a. Notification of the designated safety authority during hazardous operations

b. Protection of personnel

c. Prevention and detection of oxygen leaks

d. Elimination of ignition sources

The design of safe facilities and equipment should consider human capabilities and the limitations of personnel responsible for operations.

9.2 Personnel

9.2.1 General.

a. Consideration for the safety of personnel at and near oxygen storage and use facilities must start in the earliest planning and design stages. Safety documentation should describe the safety organization and comment specifically on inspections, training, safety communications and meetings, operations safety and instruction manuals, accident investigations, and safety instruction records. Training should familiarize personnel with the physical, chemical, and hazardous properties of LOX and GOX, with personal protective equipment, with the correct operation of oxygen systems, and hazard recognition and control prevention.

b. The responsible user organization of the NASA center should be notified of oxygen transport, loading, and use operations. The user organization should assure that the safety equipment required at the operational site is present and that all necessary support organizations, such as security, have been notified. Transportation of oxygen-loaded systems should not be scheduled during peak traffic periods if possible.

c. Equipment failures caused by operator errors can result in fires, explosions, injury, and extensive damage. Operators shall be trained for proper operations and kept informed of any changes in operating or safety procedures. The operators must be qualified and certified for working with LOX and GOX (NHB 1700.1). The operators shall also be trained in the corrective actions required in an accident. Personnel engaged in operations should be advised of the hazards that may be encountered.

9.2.2 Confined Space.

a. Instruments used for determining oxygen enrichment or oxygen depletion must be calibrated in accordance with specific requirements for the instrument.

b. Personnel shall not be permitted to enter a confined space that may be subject to oxygen enrichment or oxygen depletion, or a confined space that contains a toxic material until an assessment of that space is made and specific authorization is obtained. Entry must be done in accordance with NASA and OSHA requirements, and only trained personnel should be allowed to use monitoring equipment, evaluate entry, and do actual entry. Free entrance is permissible only if the oxygen concentration is between 19.5 and 23.5 volume percent (NHS/IH 1845.2).

9.2.3 Operator Certification. Before being certified to work with LOX or GOX, the operator shall demonstrate the following:

a. Knowledge of the properties of LOX and GOX

b. General knowledge of approved materials that are compatible with LOX and GOX under operating conditions

c. Familiarity with manufacturers' manuals detailing equipment operations

d. Proficiency in the use and care of protective equipment and clothing and safety equipment

e. Proficiency in maintaining a clean system and clean equipment in oxygen service.

f. Recognition of normal operations and symptoms that indicate deviations from such operations

g. Conscientious following of instructions and checklist requirements

9.2.4 Personal Protective Measures.

9.2.4.1 General. Protective clothing and equipment, including respiratory protection, should be included in personal protective measures. All operations involving handling LOX should be performed under the “buddy system” at the level required for the hazard and complexity of the task.

9.2.4.2 Safety Clothing.

a. Gloves for use around LOX systems must have good insulating quality. They must be designed for quick removal in case LOX gets inside. Because footwear may also get LOX inside, shoes must have high tops and pant legs must be worn outside and over the shoe tops. The pants must have no external pocket openings and no cuffs. The shoes should be of leather.

b. Personnel handling LOX must wear head and face protection. A face shield or a hood with a face shield must be worn. If LOX is being handled in an open system, an apron of impermeable material should be worn.

c. Oxygen will saturate normal clothing, rendering it extremely flammable. Clothing described as flame resistant or flame retardant under normal atmospheric conditions may be flammable in an oxygen-enriched atmosphere. Impermeable clothing components with good insulative properties may help protect the wearer from thermal injuries.

d. Any clothing that has been splashed or soaked with oxygen vapors should not be removed until completely free of the gas. Personnel exposed to high oxygen atmospheres should leave the area and avoid all sources of ignition until the oxygen in their clothing dissipates. Oxygen can saturate the skin also; therefore, personnel should avoid ignition sources for 30 minutes after exposure.

Note: Possible sources of ignition include sparks from tools and static electricity.

9.2.4.3 Respiratory Protection. In the event respiratory protection is required, as in cleaning, venting, or purging operations, the breathing air used should be periodically tested to ensure it meets CGA Grade D air specifications.

9.2.4.4 Auxiliary Equipment.

a. Portable oxygen detectors of approved design are useful where oxygen leakage may increase fire and explosion hazards.

b. Safety showers and eye-wash fountains are provided only to deal with fire and corrosive chemicals or to flush cryogenic liquids from clothing and skin.

c. Water hoses should be available to thaw valves and fittings on cryogenic storage containers. Atmospheric moisture may freeze on valve stems and similar components, making them impossible to open or close. Running water onto the frozen part may thaw the ice and enable component operation. Running water is also useful to thaw ice if someone's gloved hand freezes to a valve handle.

d. Warning systems should be used to monitor oxygen systems that have the potential of endangering operating personnel. The warning systems should be shielded and designed so the operation of a single detection device serves to alarm but not necessarily to initiate basic fire and emergency protection. System and equipment safety components should be installed for control of automatic equipment to reduce the hazards indicated by the warning systems. Manual controls within the system should include automatic limiting devices to prevent over-ranging.

9.3 Cooldown and Loading Procedures. The cooldown and loading procedures must be followed to limit liquid geysering and large circumferential and radial temperature gradients in the piping. Liquid flow cools a pipe faster than comparable gas flow, and nonuniform cooling may occur with two-phase flow. Flow rates that predict nonstratified LOX flows in pipes of various sizes are presented in Schmidt and Forney (1975); Liebenberg, Novak, and Edeskuty (1967); and Commander and Schwartz (1966). System failures have occurred from operational pressure surges. The procedures and checklists should ensure operation sequencing to prevent pressure spikes.

9.3.1 Cryogenic Cold-shock. Cold-shocking a newly assembled LOX system by loading it with clean liquid nitrogen following final assembly is highly recommended. After the cryogenic cold-shock, the system should be emptied of liquid nitrogen and warmed to ambient temperature. Bolts and threaded connection must then be retorqued to prescribed values, and gas leak-checking procedures should follow. Following cold-shock, the entire system should be inspected for evidence of cracking, distortion, or any other anomaly, with special attention directed to welds. Then system cleanliness must be checked and verified.

9.3.2 Hydrostatic Testing. Where cleaning requirements preclude post-hydrostatic testing of a cold-shocked system, a thorough review of system integrity should be conducted. This includes cases where a previously tested system is to be modified (Thomas 1992).

9.4 Examinations. A visual safety examination of the oxygen systems should include verification of dimensions, joint preparations, alignment, welding or joining, supports, assembly, and erection. Examples of conditions to be observed are:

- Corrosion (especially under insulation)
- Mechanical damage
- Cracking (especially at welds and areas of known stress concentration)
- Bulges or blisters
- Leakage
- Loose nuts, bolts, or other parts
- Excessive vibration
- Abnormal noise
- Overtemperature

- Discrepancies in gauge readings
- Pipe hanger condition
- Flexible hose antiwhip devices
- Frost on vacuum-jacketed lines and on containers
- Obstruction in relief-valve vents
- Evidence of contamination in system.

10. FACILITY PLANNING AND IMPLEMENTATION

10.1 General

a. Because of the hazards associated with oxygen and oxygen-enriched air, planning for the protection and safety of personnel and equipment must start at the initial facility design stages.

b. An environmental review of LOX and GOX facilities should include an understanding of potential environmental effects and how they can be effectively controlled. Situations during transportation, storage, transfer, testing, and vaporization where life, health, environment, and property may be exposed to substantial hazards should be considered. The probability of events occurring and causing spills, the nature of the spill, and the risks of fires and explosions should be included in the evaluation.

c. Vapor cloud dispersion studies should be performed, taking into account evaporation rates, cold vapor stability, spill sizes, and ground conditions. The studies should include the effects of ignition under various stages of developing oxygen-enriched air-fuel mixtures.

d. Various techniques and methods have been developed that provide protection against fires and explosions:

(1) Containers sufficiently strong to withstand explosions (ASME 1995a; ASME 1995b; NFPA 68 1978)

(2) Venting methods to prevent vessel failures (NFPA 68 1978; Stull 1977)

(3) Sufficient clearances and separations between oxygen containers and incompatible materials, storage tanks, plant equipment, buildings, and property lines that any accident or malfunction has a minimum effect on facility personnel and public safety. These may include protective enclosures such as barricades or cell enclosures (Baker et al. 1978).

(4) Ignition and flame prevention techniques (NFPA 1986)

e. Quantity-distance relationships are intended as a basic guide in choosing sites and separation distances. Quantity-distance criteria for bulk oxygen storage facilities are intended to provide protection from external fire exposure. Quantity-distance criteria for oxygen-fuel systems, however, are intended to reduce the effects of fire, explosion, fragmentation, and detonation by keeping the hazard source at a safe distance from people and facilities. Blast effects and fragmentation are discussed further in Appendix F.

f. Some general facility design guidelines for oxygen facilities are as follows:

(1) Design to manage fires. Provide an automatic remote shutoff to isolate critical components from all bulk oxygen supplies. Water spray systems must be provided (NSS 1740.11).

(2) Locate oxygen systems a safe distance from heat or radiation sources.

(3) Limit ignition sources and provide lightning protection in the form of lightning rods, aerial cable, and suitably connected ground rods in all preparation, storage, and use areas. All equipment in buildings should be interconnected and grounded to prevent inducing sparks between equipment during lightning strikes (NFPA 70 1993).

(4) Provide an isolation valve outside of a building that has oxygen lines to close off the oxygen supply.

(5) Anticipate indirect oxygen exposure that may result from system failures.

(6) Avoid venting into confined spaces.

(7) Use the fewest number of joints possible for piping.

(8) Locate instrumentation and controls so the system can be inspected, serviced, and operated without presenting a hazard to personnel. Lighting should be provided for equipment inspection and safe personnel movement.

(9) Provide sufficient clearance for vehicles in structures over roads, driveways, and accesses. Roads, curves, and driveways should have sufficient width and radius to accommodate required vehicles. Access should be provided for the operation and maintenance of safety and control equipment. Also, two exit routes should be provided from all buildings and test cells.

(10) Consideration should be given to the effect of an oxygen system's particular location, use, size and criticality on the cost of cleaning and inspection procedures. Commercial cleaning standards may be adequate for laboratory facilities and smaller test facilities, and until lower cost methods of cleaning and inspection are developed, the risk of equipment loss or damage may in certain cases be economically acceptable.

10.2 Hazards and Reviews

10.2.1 Hazards. Hazards resulting from leaks and spills, over pressurization, and transportation can be found in paragraph 12. Other hazards are listed below.

10.2.1.1 Compressor and Pump Malfunctions. Many compressor and pump malfunctions have resulted in ignition and fire.

a. The best available materials of construction are often not completely compatible with oxygen and under certain conditions will burn. Problems with centrifugal pumps have included sufficient friction between the rotating parts and the casing to cause ignition, bearing failures, and fires. Lubrication also presents problems. Bearing friction tends to vaporize LOX with subsequent failures. Pumps with LOX-lubricated bearings must maintain liquid at the bearing to prevent friction. Sufficient net positive suction pressure (NPSP) must be maintained to prevent

cavitation. Consideration should be given to the installation of a cavitation sensor or downstream thermocouple with anti-shutdown capability to enhance safety.

b. Shaft seals exposed to the atmosphere may condense water and cause pump failures because of ice formation. Installing a purged envelope around this area may prevent this damage from occurring. Pumping systems must have suction screens or filters to keep out particles and to maintain the required cleanliness. The clearance between rotating and stationary parts should be sufficient to eliminate catching of materials. Suitable devices (strainers) for arresting contaminants should be fitted in the intake and discharge lines. The mesh gauge of the strainer should be smaller than the smallest clearances between impeller and casing. The filter and screen sizes in oxygen systems should be specified by the engineering or safety directorate. The pumps, bearings, seals, and screens should be designed, engineered, and cleaned specifically for LOX service.

10.2.1.2 Liquid Oxygen and Gaseous Oxygen System Failure.

a. Regulator, valve, and mechanical device malfunctions can cause fires and explosions. Piping and valving in vaporization systems may fail, causing injury and low-temperature exposures. Combustion of the materials in oxygen may occur, resulting in extensive damage from fires and explosions.

b. Valves and high-pressure regulators may fail, usually from improper operation or the presence of foreign material. Adiabatic compression may cause sufficiently high temperatures to ignite soft goods or foreign materials.

c. Regulators should be placed in operation correctly, and all fittings and connections should be cleaned for oxygen service.

d. Components of oxygen systems should be tested for safety and performance. The use of proper materials and suitable filters and screens, cleanliness, avoidance of galling in valves, and quality control will limit system failures. Piping manifolds should be sized to prevent excessive back pressure.

10.2.1.3 Insulation Failure. This causes overpressurization, which is further explained in paragraph 12.

10.2.1.4 Test Cell Entrances.

a. Every entrance into an operating test cell must be considered dangerous. Authorized personnel should enter after conditions within the cell have been determined to be safe.

b. Test cells and buildings in which combustible or explosive mixtures are present should not be entered under any condition.

c. Personnel should be warned of the presence of oxygen-enriched areas that create combustible or explosive mixtures and high or low oxygen concentrations by using detectors, sensors, and continuous sampling devices that operate both an audible and visible alarm. These warning systems should be designed and installed to allow for proper operation of the test equipment, while at the same time providing adequate warning time to reduce the potential for exposure to possible hazards or hazardous conditions.

10.2.1.5 Liquid Air. Impact-sensitive gels can form if liquid air forms on exposed surfaces of LOX lines and components and is allowed to drip onto a dirty floor.

10.2.2 Hazards Analysis.

a. In addition to the component- and system-level hazards analysis discussed in paragraph 5, a facility-level hazards analysis should be performed for each facility system or subsystem to identify areas indicating high probability of failures that would result in leakage, fires, and explosions. The hazards analysis allows a better understanding of the basis for the safety requirements and emphasizes the need for compliance with established regulations.

b. Methods of performing hazards analyses include techniques such as fault hazard analysis and fault-tree analysis, in which undesirable events are evaluated and displayed, or a failure mode and effects analysis and single-barrier failure analysis (described in paragraph 7), in which potential failures and the resulting effects (to include ignition and combustion in oxygen-enriched atmospheres) on the safety of the systems are evaluated (National Transportation Safety Board (NTSB) NTSB-STS-71-1 1971; Solomon, Rubin, and Krent 1976)

10.2.3 Safety Reviews (SR). In addition to the design and hazards reviews mentioned above and in paragraph 8, an ORI may be required before implementing the facility. Guidelines for this requirement can be found in NHB 1700.1.

10.3 Storage Systems

a. As defined by the National Fire Protection Association (NFPA 50), a bulk oxygen system is an assembly of equipment, such as oxygen storage containers, pressure regulators, safety devices, vaporizers, manifolds, and interconnecting piping that has a storage capacity of more than 566 m^3 (20 000 ft^3) of oxygen at normal temperature and pressure (NTP) including unconnected reserves at the site. The bulk oxygen system terminates at the point where oxygen at service pressure first enters the supply line. The oxygen containers may be stationary or movable.

b. As defined by the Occupational Safety and Health Administration (OSHA) (29 CFR 1986), a bulk oxygen system has more than 368 m^3 (13 000 ft^3) of oxygen at NTP, connected in service or ready for service, or more than 708 m^3 (25 000 ft^3) of oxygen (NTP), including unconnected reserves at the site.

c. The installation and location of bulk GOX systems should conform to the requirements in 29 CFR (1986) and NFPA 50.

d. Bulk GOX storage systems should be located aboveground and outdoors or should be installed in a building of fire-resistive, noncombustible, or limited-combustible construction (NFPA 220) that is adequately vented and used for that purpose exclusively. Containers and associated equipment should not be located beneath, or exposed by the failure of, electric power lines, piping containing any class flammable or combustible liquids, or piping containing flammable gases (NFPA 50).

e. Where it is necessary to locate a bulk GOX system on ground lower than all classes of adjacent flammable or combustible liquid storage, suitable means should be taken

(such as diking, diversion curbs, or grading) to prevent accumulation of liquids under the bulk oxygen system (NFPA 50).

f. Noncombustible barriers should be provided to deflect any accidental flow of LOX away from the site boundaries and control areas. Oxygen spills into public drainage systems should be prevented. Manholes and cable ducts should not be located in oxygen storage and test areas.

g. The system and component designs and installations should restrict the presence of combustible materials. Items to be considered include mechanical devices, instruments, and operating procedures. Mechanical devices include suitable fittings and connections, valves and valve outlet designs, transfer hoses, filters, and check valves. Instruments include analyzers to monitor oxygen purity and to detect leaks and spills. Operating procedures include purging with GN_2 before wetting with oxygen, attention to cleanliness requirements, and quality control programs.

h. Liquid-oxygen installations shall be located at recommended distances from buildings, fuel storage facilities, and piping to provide minimum risks to personnel and equipment. An impermeable, noncombustible barrier must be provided to deflect any accidental flow of oxygen liquid or vapor from hazardous equipment, such as pumps, hot electrical equipment, or fuel lines, that are immediately adjacent to the LOX or GOX lines and that could be splashed with a gaseous or liquid leak.

i. LOX tanks shall be located away from oil lines and areas where hydrocarbons and fuels can accumulate. The tanks must not be located on asphalt, and oily or contaminated soil must be removed and replaced with concrete or crushed stone. The location and amount of nearby flammable liquid and fuel storage must be reviewed frequently.

j. Storage tanks and impounding areas must be located far enough from property lines to prevent damage by radiant heat exposure and fragmentation to buildings and personnel located outside the plant property limits. Radiant heat densities must be limited at the property lines to avoid damage to off-property structures.

k. Ground slope modification, appropriately sized gullies and dikes, and barricades must be used for protection of facilities adjacent to oxygen storage and use facilities.

l. Oxygen storage and use facilities must be protected from failures of adjacent equipment (for example, pumps), which could produce shrapnel.

10.4 Storage Vessels

a. At present, the minimum conventional vessel design criteria including engineering design calculations and procedures, fabrication, testing, and inspection for oxygen vessels are those presented in the ASME code (1995b). This code also includes recommended formulas for calculating shell and head thicknesses to withstand the designed internal pressures and for determining thickness requirements for vessel openings and reinforcements. It must be recognized that the code suggests minimum safe standards that can be exceeded if they are found to be insufficient on the basis of specialized experiences. For example, ASME (1995a) allows the use of higher design stresses than are permitted under ASME (1995b), but also requires greater attention to design analysis, loadings, fatigue evaluation, fabrication, and inspection. ASME (1995a) requires more precise design procedures and prohibits a number of

common design details. This reference specifically delineates fabrication procedures and requires more complete examination and testing. The guidelines presented in Division 2 (ASME 1995a) should be reviewed, and many of the requirements should be accepted as the minimum for LOX vessels.

b. In many instances, LOX storage vessels for ground support equipment are designed to serve as both storage and run tanks; as run tanks they provide the oxygen directly into the test or flight equipment without an intermediate vessel or liquid transfer operation. The design and construction requirements for such a combined storage-run tank are more demanding since the pressure and flow requirements are usually considerably greater than those for a storage vessel alone.

c. NASA and most large industrial oxygen users usually purchase liquid-oxygen storage vessels from vendors who are familiar with low-temperature equipment design, fabrication, and operation. The specifications prepared by NASA should be sufficiently detailed for a liquid-oxygen storage system that is safe for long-term use. The design calculations must take into consideration the intended use of the vessel and its storage and heat leak requirements.

d. See paragraph 11, Transportation, for information about tank truck specifications.

10.5 Fire Protection Systems for Oxygen-Enriched Environments. NFPA 53 contains additional relevant data pertaining to fire extinguishing in oxygen-enriched (see paragraph 3) atmospheres. Much of the information in this section summarizes portions of Chapter 7 of NFPA 53.

10.5.1 General.

a. Because the combustion rate of materials in oxygen-enriched atmospheres is so greatly increased, response by professional fire fighters may not be quick enough to preclude major damage to a facility. For this reason, operational personnel in those oxygen-enriched environments must be fully trained and instructed in the operation of the fire-fighting equipment provided. However, operational personnel should not attempt to fight any major fires. Their mission should be to secure the system as best possible, notify the fire department, and to advise and direct as needed qualified fire-fighting personnel. The heightened level of oxygen fire volatility further should emphasize the utilization of highly trained fire-fighting professionals.

b. Extinguishing systems designed for the normal atmosphere may not be effective in an oxygen-enriched atmosphere.

c. Rigid specifications for the design of fire-extinguishing systems for any planned or potential oxygen-enriched atmosphere have not been established. Each location will have its own particular set of requirements. General guidelines have been delineated that will help set up a fire-extinguishing system for a particular use.

d. An evacuation plan for personnel in oxygen-enriched atmospheres should be planned and the personnel instructed. Quick evacuation is necessary to protect personnel from fire exposure, toxic gas exposure, and extinguishing agent exposure.

e. Fire protection provisions for hyperbaric and hypobaric facilities are in NFPA 99 and NFPA 99B.

10.5.2 Fire-Extinguishing Systems.

10.5.2.1 Automatic. It is recommended that fixed fire-extinguishing systems capable of automatic actuation by fire detection systems be established for locations containing oxygen-enriched environments. In such systems the design emphasis should be given to early detection, quick suppression system activation, and evacuation of personnel. Where possible, detection systems should concentrate on sensing fires as soon as possible, especially in the earliest stages of smoldering, before visible smoke or flames. Air-sampling particle detection systems have been used in this application to continuously monitor equipment and enclosed spaces. The extinguishing system should also provide rapid discharge such as that used in deluge type water sprays. Where protection of personnel is an issue, pre-primed deluge systems should be considered. It is up to the responsible authority to decide if the automatic system should be kept in operation continuously during unoccupied periods. Spaces left unattended for short time periods should still have the automatic system in operation.

10.5.2.2 Manual. Manual fire-extinguishing systems can be used as a supplement to an automatic system. In some cases, small fires may be extinguished manually before actuation of an automatic system.

10.5.3 Fire-Extinguishing Agents.

10.5.3.1 General. Depending on the location and application, personnel may work in oxygen-enriched atmospheres. Therefore, the use of specific fire-extinguishing agents must be evaluated with respect to their inherent toxicity and the toxicity of breakdown products when used. Because of the increased combustibility and rapidity of burning materials in oxygen-enriched atmospheres, significant increases in water densities and gaseous concentrations of extinguishing mediums are necessary to extinguish fires. Although there are no standards for a minimum system design, the most effective general rule is to provide complete coverage with as much water or another acceptable extinguishing medium as practically possible. In enclosed oxygen-enriched systems occupied by personnel, the toxicity of the extinguishing medium and the ability of personnel to evacuate with the suppression system operating must be considered in the design.

10.5.3.2 Water. Water is the most effective extinguishing agent when sufficiently applied. A design using fixed water spray nozzles can be effective. NFPA 15 (1985) covers installations of systems for areas with ordinary atmospheric air, but many of the design criteria are pertinent to areas with oxygen-enriched atmospheres.

10.5.3.3 Carbon Dioxide. Only limited data exist regarding the effectiveness of carbon dioxide in extinguishing fires in oxygen-enriched atmospheres (Dees 1992; Sircar 1992). Total flooding of an entire space is impractical because of the hazards to personnel from asphyxiation and toxicity.

10.6 Barricades.

a. Barricades[1] needed in oxygen test areas to shield personnel, dewars, and adjoining areas from blast waves or fragments resulting from a pressure vessel failure may also

[1] The requirements for barricaded open storage modules are explained in DoD 6055.9, Chapter 5 "Facilities Construction and Siting".

be needed to isolate liquid-oxygen storage areas from public or private property that may otherwise be too close.

b. To control liquid and vapor travel caused by spills, the facility should include barricades, shields for diverting spills, or impoundment areas. Any loading areas and terrain below transfer piping should be graded toward a sump or impoundment area. The surfaces within these areas should be cleaned of oils, greases, hydrocarbons, and other materials, such as vegetation that can be easily ignited. Inspections should be made to ensure good housekeeping.

c. Barricades surrounding storage vessels should be designed to contain 110 percent of the LOX in the fully loaded vessel.

d. The most common types of barricades are mounds and revetments.

(1) A mound is an elevation of earth with a crest at least 0.914 m (3 f*t)* wide, with the earth at the natural slope on each side and with such an elevation that projections from the structure containing the oxygen hazard to the structure(s) to be protected will pass through the mound.

(2) A revetment is a mound modified by a retaining wail.

e. Results of analytical studies and tests show that

(1) Barricades reduce peak pressures and shock waves immediately behind the barricades. However, the blast wave can reform at some distance past the barricade.

(2) Revetments are more efficient than mounds in reducing peak pressures and impulses near the barricades

(3) Peak pressure and impulse are greatly influenced by the height above the ground, the location of the barricade, and the barricade dimensions and configuration

f. Pumps are usually required at oxygen storage and use facilities, and protection against overpressures from liquid flash off and from pump failures yielding shrapnel should be provided (Bates 1976; CGA 1971; National Academy of Sciences 1973; Bauer, Wegener, and Windgassen 1970; Baker et al. 1974; Moore 1967). Housings for high-rotational-speed test rigs may be designed as the shrapnel shield between the rig and the vessel. Personnel guards should be specified for exposed moving parts and for hot and cold surfaces.

g. See also a report on the design of barricades for hazardous pressure systems (Moore 1967) and a paper by Lawrence and Johnson (1974) on options to consider when designing to limit explosion damage.

h. When locating pressure vessels, consider the possibility of tank rupture caused by impact with adjacent hardware. Shrapnel-proof barriers may be used to prevent the propagation of an explosion from one tank to another and to protect personnel and critical equipment.

10.7 <u>Quantity-Distance Guidelines for Bulk Liquid Oxygen Storage</u>

10.7.1 Criteria. The quantity-distance criteria for LOX should be as established in NSS 1740.12; NFPA 50; DOD 6055.9; Hannum (1984a, 1984b, and 1985); and Strehlow and Baker (1975).

10.7.2 Compatibility Groups. DoD 6055.9 establishes various compatibility groups and identifies the types of liquid propellants and the degree of hazard. Liquid oxygen, for bulk storage conditions, is considered a Group II (strong oxidizers that exhibit properties such as vigorous oxidation or rapid combustion in contact with materials such as organic matter) propellant hazard with a Group A storage compatibility designation.

10.7.3 Quantity-Distance Tables. The recommended separations of bulk oxygen storage systems from inhabited buildings and public traffic routes are shown in Table 10-1 (DOD 6055.9 1992). The intragroup incompatible and compatible Group II storage distances are also included in this table.

10.7.4 Incompatible Storage. When liquid-oxygen storage and flow systems are part of the range launch pad, static test stand, or test area, a greater possibility of reaction with the fuel (propellant) exists. Potential reactions from leaks or pressure ruptures of propellant systems include normal combustion with the fuel or a detonation of the oxygen-fuel mixture. Therefore, with LOX in conjunction with a liquid fuel, as in engine static tests or launch operations, the quantity-distance criteria are based on blast hazards.

10.7.5 Explosive Equivalent.

a. A given total quantity of LOX plus fuel accidentally released and ignited can be expected to produce a blast-wave with far-field characteristics similar to some smaller amounts of high explosives. The total amount of propellants (fuel plus oxidizer) that are involved in an accidental release can be related to an equivalent amount of TNT or similar high explosive that would produce the same blast-wave, far-field overpressure. Liquid-propellant explosive equivalents for a few propellant combinations are given in Table 10-2 (DOD 6055.9). The equivalent amount of explosive is determined by multiplying the explosive equivalent factor times the total weight in pounds of oxygen and fuel present (Appendix F; Benz, Bishop, and Pedley 1988; Baker et al. 1978; Kuchta 1973).

b. The explosive equivalent factors are considered extremely conservative. Results of theoretical studies and limited test results show that the equivalent weight numbers presently used for fuel-oxygen such as hydrogen-oxygen[1] and RP fuel-oxygen mixtures indicate that maximum pressures as high as those that occur with TNT are not developed. The recommended separation distances should be considered conservative. The total quantity of propellant in a tank, drum, cylinder, or other container shall be the net weight of the propellant contained therein. Where the storage containers are not separated by the appropriate distance or are not so subdivided as to prevent possible accumulative involvement, the quantity shall be considered as the total of all such storage containers. The distances can be reduced with the installation of effective intervening barriers to limit or prevent mixing. The distance will be calculated on the basis of the explosive equivalent of the amounts, subject to the mixing.

[1]As of 1993, tests on large-scale hydrogen-oxygen explosions are being conducted at WSTF to characterize the explosions.

10.7.6 Inhabited Buildings and Public Traffic Routes. Distances to inhabited buildings and to public traffic routes for various quantities of equivalent propellant mixtures are given in Table 10-3 (DOD 6055.9). The following factors were considered in computing the distances:

a. Studies have shown that for small quantities of explosive mixtures and near-field distances the fragment hazard is greater than blast hazard, but that for large quantities and far-field distances, fragments will not travel far because of air resistance, and blast becomes the principle hazard. This changeover phenomenon has been shown to happen at 13 608 kg (30 000lb). The DoD Explosives Safety Board recommends that if an explosive mixture is mixed within a confined space such as a rocket motor or building that would produce fragments, a minimum distance of 183 m (600 ft) for equivalent quantities of 45 kg (100 lb) or less or 381 m (1250 ft) for quantities from 46 to 13 608 kg (101 to 30 000 lb) of equivalent mix weight should be used instead of the distances in Table 10-3 (DOD 6055.9).

b. Distances are computed from the factors in Table 10-4 based on the blast effect of the propellant combination (DOD 6055.9).

c. Designated Safety Committees and/or the Installation Safety Director have initial approval authority for recommended separation distances. Because these are mandatory requirements, a final waiver will be granted only by the Associate Administrator for Safety and Mission Assurance through the Safety Division, NASA Headquarters.

d. Intraline distance is the minimum distance necessary to limit direct propagation of an explosion by the blast wave from one run or storage complex containing both oxidizers and fuels to another similar complex. Indirect or delayed propagation may result from thrown fragments, debris, or firebrands. Serious personal injuries caused by fragments, debris, or firebrands are likely. Intraline distances are provided in Table 10-5 (DOD 6055.9).

10.8 Quantity Distance Guidelines for Bulk Gaseous Oxygen Storage

10.8.1 General Guidelines. The minimum distances from any bulk GOX storage container to exposures, measured in the most direct line, should be as follows (29 CFR 1986; NFPA 50):

a. At least 15 m (50 ft) from buildings of wood-frame construction.

b. Not less than 0.3 m (1 ft) (or other distance to permit system maintenance) from buildings of other than wood-frame construction

c. At least 3 m (10 ft) from any opening in walls of adjacent structures. This provision should apply to all elements of a bulk oxygen system where the oxygen storage is high-pressure gas. Where the storage is liquid, this provision should apply only to pressure regulators, safety devices, vaporizers, manifolds, and interconnecting piping.

d. For flammable gases aboveground, see Table 10-6 (NFPA 50; 29 CFR 1986)

e. At least 15.2 m (50 ft) from solid materials that burn rapidly, such as excelsior or paper

f. At least 7.6 m (25 ft) from solid materials that burn slowly, such as coal and heavy timber

g. At least 22.9 m (75 ft) in one direction and 10.7 m (35 ft) at approximately 90 degrees from confining walls (not including protective structures having a minimum fire resistance rating of 2 hours and less than 3.7 m (12 ft) high) to provide adequate ventilation in courtyards and similar confining areas

h. At least 15.2 m (50 ft) from places of public assembly

i. At least 15.2 m (50 ft) from areas occupied by nonambulatory patients that are in a direct line from an inner container, a pressure relief device, discharge piping outlets, and/or filling and vent connections

j. At least 3 m (10 ft) from any public sidewalk or parked vehicles

k. At least 1.5 m (5 ft) from any line of adjoining property that may be built upon

10.8.2 Protective Structures. The distances in (a) 1, 4-6, 10, and 11 above do not apply where protective structures having a minimum fire resistance of 2 hours interrupts the line of sight between uninsulated portions of the bulk oxygen storage installation and the exposure. A protective structure protects uninsulated oxygen storage containers or supports, control equipment enclosures, and system piping (or parts thereof) from external fires. In such cases, the bulk oxygen installation should be at least 0.3 m (1 ft) from the protective structure.

10.9 Oxygen Detection

a. Whether or not oxygen detectors are installed is a decision that should be made at a NASA center level. Considerations involved in making this decision should include: system construction and complexity and the effects of system leaks on the facility or adjacent equipment. The installation of a detector system does not eliminate or reduce the requirement that systems be constructed leak-free and that the system be inspected and validated at regular intervals.

b. A reliable oxygen detection and monitoring system should

(1) Identify possible oxygen-enriched areas. While detection systems will not pinpoint a leak, they may or may not indicate the existence of one depending on wind, or detection method. Leak-detection by observation alone is not adequate. Although the cloud and moisture that accompanies LOX leaks is visible, leak-detection by observing such clouds is not reliable.

(2) Warn whenever the worst allowable condition is exceeded. Visual alarms should be considered for the system to indicate that a problem exists.

c. Only detection units validated and approved by NASA instrumentation personnel with an SRM&QA review for oxygen and oxygen-enriched atmospheres shall be used. The detection units and their response times shall be evaluated for suitable performance. Typical oxygen detection equipment used at NASA test facilities includes the following (range from 0 to 25 and 0 to 100 percent by volume):

(1) Galvanic

(2) Paramagnetic

(3) Electrochemical (ZrO_2 sensor, fuel cell, open-cathode oxygen cell, polarographic)

(4) Gas chromatograph

(5) Mass spectrometer

d. When planning an oxygen detection system, several steps should be taken:

(1) Evaluate and list all possible sources to be monitored. Valid justification should be presented for any sources that are not considered for monitoring.

(2) Evaluate the expected response time of the oxygen detection system to ensure the compatibility of the fire detection or safety system considered for use.

(3) Include carefully maintained and periodically recalibrated detectors as well as means to ensure that any leaking oxygen passing the detectors will be sensed.

(4) The oxygen detection system must be considered with the fire detection and other safety systems used, to initiate corrective action(s) in as short a time as possible.

e. Locations requiring consideration for detectors include

(1) Leak sources where the possibility of fire must be eliminated, such as valve complexes, buildings, containers, and test equipment

(2) At LOX valves, outside LOX containers, and at exposed LOX lines, although leaks from these sources may be allowed to diffuse into the atmosphere

(3) LOX leaks through vacuum-jacketed equipment. These leaks can best be detected by temperature-monitoring systems. When it has been established that a leak exists in a vacuum-insulated vessel, the first step is to analyze the discharge of the vacuum pump with an oxygen analyzer to determine whether the leak is in the outer casing or in the liquid container. If the analysis shows a normal purity of approximately 21 volume percent oxygen, the leak into the vacuum space is from the atmosphere.

10.10 Venting and Disposal Systems

10.10.1 Liquid Oxygen Disposal.

a. Uncontaminated LOX should be disposed of by contained vaporization systems. It should not be dumped on the ground because organic materials such as macadam or asphalt may be present (see paragraph 12). Recommended vaporization systems include:

(1) Direct-contact steam vaporizers in which LOX is mixed with steam in open-ended vessels. The vaporized liquid is ejected from the top of the vessel along with entrained air and condensed steam.

(2) Heat sink vaporizers, which are large containers filled with clean gravel and covered to exclude atmospheric contamination. The capacity of this type of vaporizer is limited to the sensible heat of the gravel.

b. A problem with liquid-oxygen disposal is the concentration of relatively small quantities of dissolved hydrocarbons caused by preferential vaporization of oxygen. When LOX has been contaminated by fuel, isolate the area from ignition sources and evacuate personnel. Allow the oxygen to evaporate and the residual fuel gel to achieve ambient temperature. The hazard associated with this impact-sensitive gel is long-lived and difficult to assess (see also paragraph 12). Inert the oxygen system thoroughly with GN_2 before any other cleanup step.

10.10.2 Gaseous Oxygen (Vapor) Venting.

a. All dewar, storage, and flow systems should be equipped with unobstructed venting systems. Oxygen venting and dumping should be restricted to concentrations that are safe for personnel at all directions and distances. A complete operations and failure mode analysis should provide the basis for determining such conditions.

b. Interconnecting vent discharges to the same vent stack may over pressurize parts of the vent system. The vent system must be designed to handle the flows from all discharges or it may produce backpressure in other parts of the system. Inadequate designs may effectively change the release pressure on all pressure-relief valves and rupture disks connected to the vent system, because these devices detect a differential pressure.

c. High-pressure, high-capacity vent discharges and low-pressure vent discharges should not be connected to the same vent stack unless the vent capacity is sufficient to avoid overpressurization of the weakest part of the system.

d. Venting should be far enough from personnel areas to permit natural dilution to safe limits. Consideration should be given for both oxygen enrichment and oxygen depletion, when venting inert gases from an oxygen system or when cleaning or purging the system. Before venting or relieving pressure, operating personnel should be cleared from the area.

e. Vent-stack outlets should be downwind from the prevailing wind direction, well removed from air intakes of test cells and control buildings, and away from walkways, platforms, and traffic lanes. Large, scheduled discharges should be when the wind is favorable.

f. Discharges from all storage and transportation systems (from rupture disks and pressure relief valves) should be to the outdoors through a vent line sized to carry the boiloff that would result from a total loss of insulation. The oxygen vents should be located at the highest possible point and should exhaust the gas vertically. Venting into valve and pump operating enclosures will saturate the area, and in an emergency the operators could be exposed to excessive hazards while attempting to control the equipment.

g. The vent design should provide protection from rain, snow, and ice buildup. To restrict the entry and freezing of atmospheric water, outlets of small vent pipes should be turned downward, and outlets of large vent stacks should have caps. The use of tees is recommended for vent-stack outlets. Screens should be mounted over vent openings to prevent insects or birds from building nests that will block the opening. A low-point drip leg should be incorporated into vent-stack designs with vent-line plumbing and valving oriented to drop towards a collection area. All probable sources of water entry should be controlled in this manner to prevent freezing components, which will make this safety system inoperable.

h. Materials used in disposal and vent systems should be corrosion-resistant and maintained at the required cleanliness level.

Table 10-1
Safe Quantity-Distance Relationships for
Liquid-Oxygen Storage (Hazard Group II)[a]

Quantity of Propellant, (lb)	Distance to Inhabited Buildings, Railroads, Highways, and Incompatible Group II Storage[b,c] (ft)	Distance to Intragroup (Intraline) and Compatible Group II Storage[d] (ft)
100[e]	60	30
200[e]	75	35
300[e]	85	40
400[e]	90	45
500[e]	100	50
600[e]	100	50
700	105	55
800	110	55
900	115	60
1 000	120	60
2 000	130	65
3 000	145	70
4 000	150	75
5 000	160	80
6 000	165	80
7 000	170	85
8 000	175	85
9 000	175	90
10 000	180	90
15 000	195	95
20 000	205	100
25 000	215	105
30 000	220	110
35 000	225	110
40 000	230	115
45 000	235	120
50 000	240	120
60 000	250	125

[a] From DoD 6055.9 (1992), Table 9-19.
[b] Distances were selected as three-fourths of Group III inhabited building distances. They were considered reasonable because of lesser hazard.
[c] When incompatible propellants are not separated by required distance or provisions are not made to prevent their mixing, the combined quantity of the two shall be used. Consult Table 10-2 to determine if explosive equivalents apply.
[d] These distances average 37.5 percent of inhabited building distances listed in Bureau of Mines Report 5707 (1961).
[e] This applies to storage of liquid propellants in all types of containers, including rocket and missile tankage, in quantities greater than single minimum-size shipping container, such as one 0.21-m^3 (55 gal) drum or one 226.8-kg (500-lb) net weight cylinder. Smaller quantities shall be stored and handled as prescribed by the controlling NASA center.

Table 10-1
Safe Quantity-Distance Relationships for
Liquid-Oxygen Storage (Hazard Group II) (continued)[a]

Quantity of propellant (lb)	Distance to Inhabited Buildings, Railroads, Highways, and Incompatible Group II Storage[b,c] (ft)	Distance to Intragroup (Intraline) and Compatible Group II Storage[d] (ft)
70 000	255	130
80 000	260	130
90 000	265	135
100 000	270	135
125 000	285	140
150 000	295	145
175 000	305	150
200 000	310	155
250 000	320	160
300 000	330	165
350 000	340	170
400 000	350	175
450 000	355	180
500 000	360	180
600 000	375	185
700 000	385	190
800 000	395	195
900 000	405	200
1 000 000	410	205
2 000 000[e]	470	235
3 000 000	505	255
4 000 000	535	265
5 000 000	555	275
6 000 000	570	285
7 000 000	585	295
8 000 000	600	300
9 000 000	610	305
10 000 000	620	310

[a] From DoD 6055.9 (1992), Table 9-19.
[b] Distances were selected as three-fourths of Group III inhabited building distances. They were considered reasonable because of lesser hazard.
[c] When incompatible propellants are not separated by required distance or provisions are not made to prevent their mixing, the combined quantity of the two shall be used. Consult Table 10-2 to determine if explosive equivalents apply.
[d] These distances average 37.5 percent of inhabited building distances listed in Bureau of Mines Report 5707 (1961).
[e] This applies to storage of liquid propellants in all types of containers, including rocket and missile tankage, in quantities greater than single minimum-size shipping container, such as one 0.21-m^3 (55 gal) drum or one 226.8-kg (500-lb) net weight cylinder. Smaller quantities shall be stored and handled as prescribed by the controlling NASA center.

Table 10-2
Liquid Propellant Explosive Equivalents[a-]

Propellant Combinations	Static Test Stands	Range Launch
LOX/Liquid Hydrogen (LH_2) or B_5H_9 + an oxidizer	60%	60%
LOX/LH_2 + LOX/RP-1	Sum of 60% for LOX/LH_2 and 10% for LOX/RP-1	Sum of 60%[h] for LOX/LH_2 and 20% for LOX/RP-1
LOX/RP-1, LOX/NH_3 or B_5H_9 + a fuel	10%	20% up to 500 000 lb + 10% over 500 000 lb

g

[a] From DoD 6055.9 (1992), Table 9-17.
[b] The percentage factors given in the table are to be used to determine the equivalencies of propellant mixtures at static test stands and range launch pads when such propellants are located aboveground and are unconfined except for their tankage. Other configurations shall be considered on an individual basis to determine the equivalents.
[c] The explosive equivalent weight calculated by the use of this table shall be added to any non-nuclear explosives weight aboard before distances can be determined from Tables 10-3 and 10-5.
[d] These equivalencies apply also when the following substitutions are made: Alcohols or other hydrocarbons may be substituted for RP-1 and C_2H_4O may be substituted for any propellant.
[e] Use LOX/RP-1 distances for pentaborane plus a fuel and LOX/LH2 distances for pentaborane plus an oxidizer.
[f] For quantities of propellant up to but not over the equivalent of 45-kg (100-lb) explosives, the distance shall be determined on an individual basis by the controlling DoD Component. All personnel and facilities, whether involved in the operation or not, shall be protected adequately by proper operating procedures, equipment design, shielding, barricading, or other suitable means.
[g] Distances less than intraline are not specified. When a number of prepackaged liquid propellant units are stored together, separation distance to other storage facilities shall be determined on an individual basis, taking into consideration normal hazard classification procedures.
[h] For large quantities, there is much debate about this value. Tests are under way to better define these values; for example, operations with the shuttle external tank are based on a yield of 20% (Klein, P.F. Letter to the Director of the Space Shuttle Program, dated July 1, 1974).

Table 10-3
Separation Distances for Liquid Hydrogen - LOX Propellant Combination[a]

Weight[b] of Explosive Equivalent, W, (lb)	Distance from Potential Explosion Site (ft)	
	To Inhabited Buildings[c]	To Public Traffic Routes[d]
1	670	400
2	670	400
5	670	400
10	670	400
20	670	400
30	670	400
40	670	400
50	670	400
100[e]	670	400
200	1250	750
300	1250	750
400	1250	750
500	1250	750
600	1250	750
700	1250	750
800	1250	750
900	1250	750
1 000	1250	750
1 500	1250	750
2 000	1250	750
3 000	1250	750
4 000	1250	750
5 000	1250	750
6 000	1250	750
7 000	1250	750
8 000	1250	750
9 000	1250	750
10 000	1250	750

[a] From DoD 6055.9 (1992), Table 9-1, Footnotes 3 and 7.
[b] Liquid hydrogen-LOX weights must be converted (see Table 10-2) to TNT-equivalent weights before using this table.
[c] The distances corresponding to quantities up to 13608 kg (30,000 lb) assume a fragment and debris hazard from the explosion. Lesser distances are permitted for these quantities according to the expression distance = $(\text{quantity})^{1/3}$ when the explosive materials are not contained or are contained by thin casings (DoD 6055.9 1992, Table 9-1, note 3).
[d] The distances in this column are 60% of the distances specified for inhabited buildings (DoD 6055.9 1992, Table 9-1, note 7).
[e] For quantities of propellant up to but not over the equivalent of 45-kg (100-lb) explosives, distance shall be determined on individual basis by the controlling NASA center. All personnel and facilities, whether involved in operation or not, shall be protected adequately by proper operating procedures, equipment design, shielding, barricading, or other suitable means.

Table 10-3
Separation Distances for Liquid Hydrogen - LOX Propellant Combination (Continued)[a]

Weight[b] of Explosive Equivalent, W, lb	Distance from Potential Explosion Site, ft	
	To Inhabited Buildings[c]	To Public Traffic Routes[d]
15 000	1250	750
20 000	1250	750
25 000	1250	750
30 000	1250	750
35 000	1310	785
40 000	1370	820
45 000	1425	855
50 000	1475	885
55 000	1520	910
60 000	1565	940
65 000	1610	965
70 000	1650	990
75 000	1685	1010
80 000	1725	1035
85 000	1760	1055
90 000	1795	1075
95 000	1825	1095
100 000	1855	1115
110 000	1960	1175
120 000	2065	1240
125 000	2115	1270
130 000	2165	1300
140 000	2255	1355
150 000	2350	1410
160 000	2435	1460
170 000	2520	1515
175 000	2565	1540
180 000	2605	1565
190 000	2690	1615
200 000	2770	1660
225 000	2965	1780
250 000	3150	1890

[a] From DoD 6055.9 (1992), Table 9-1, Footnotes 3 and 7.
[b] Liquid hydrogen-LOX weights must be converted (see Table 10-2) to TNT-equivalent weights before using this table.
[c] The distances corresponding to quantities up to 13608 kg (30,000 lb) assume a fragment and debris hazard from the explosion. Lesser distances are permitted for these quantities according to the expression distance = $(\text{quantity})^{1/3}$ when the explosive materials are not contained or are contained by thin casings (DoD 6055.9 1992, Table 9-1, note 3).
[d] The distances in this column are 60% of the distances specified for inhabited buildings (DoD 6055.9 1992, Table 9-1, note 7).

Table 10-3
Separation Distances for Liquid Hydrogen - LOX Propellant Combination (Continued)[a]

Weight[b] of Explosive Equivalent, W, lb	Distance from Potential Explosion Site, ft	
	To Inhabited Buildings[c]	To Public Traffic Routes[d]
275 000	3250	1950
300 000	3345	2005
325 000	3440	2065
350 000	3525	2115
375 000	3605	2165
400 000	3685	2210
425 000	3760	2250
450 000	3830	2300
475 000	3900	2340
500 000	3970	2380

[a] From DoD 6055.9 (1992), Table 9-1, Footnotes 3 and 7.
[b] Liquid hydrogen-LOX weights must be converted (see Table 10-2) to TNT-equivalent weights before using this table.
[c] The distances corresponding to quantities up to 13608 kg (30,000 lb) assume a fragment and debris hazard from the explosion. Lesser distances are permitted for these quantities according to the expression distance = $(\text{quantity})^{1/3}$ when the explosive materials are not contained or are contained by thin casings (DoD 6055.9 1992, Table 9-1, note 3).
[d] The distances in this column are 60% of the distances specified for inhabited buildings (DoD 6055.9 1992, Table 9-1, note 7).

Table 10-4
Factors for Blast Effects[a]

Equivalent Mix Weight, W (lb)	Formulas for Computing Distance to Inhabited Buildings (ft)	Distance to Public Traffic Routes (ft)
0 - 100 000	$40W^{1/3}$	$24W^{1/3}$
100 000 - 250 000	$2.42W^{0.577}$	$1.452W^{0.577}$
250 000 - 1 000 000	$50W^{1/3}$	$30W^{1/3}$

[a] DOD 6055.9 (1992), Table 9-1.

Table 10-5
Intraline Distances for Liquid Hydrogen - LOX Propellant Combination[a]

Net Explosive Weight[b] (lb)	Distance (ft)	
	Barricaded[c] $D=9W^{1/3}$	Unbarricaded $D=18W^{1/3}$
50[d]	30	60
100	40	80
200	50	100
300	60	120
400	65	130
500	70	140
600	75	150
700	80	160
800	85	170
900	85	175
1 000	90	180
1 500	105	210
2 000	115	230
3 000	130	260
4 000	145	290
5 000	155	310
6 000	165	330
7 000	170	340
8 000	180	360
9 000	185	370
10 000	195	390
15 000	225	450
20 000	245	490
25 000	265	530
30 000	280	560
35 000	295	590
40 000	310	620
45 000	320	640
50 000	330	660
55 000	340	680
60 000	350	700
65 000	360	720

[a] From DoD 6055.9 (1992), Table 9-3. In Table 9-3, the distances are given to the nearest foot.
[b] Liquid hydrogen-LOX weights must be converted (see Table 10-2) to TNT-equivalent weights before using this table.
[c] Requirements and specifications for barricaded facilities are given in DoD 6055.9 (1992), Chapter 5.
[d] For less than 23 kg (50 lb), shorter distances (determined by formulas for Columns 2 and 3) may be used when structures, blast mats, and line can completely contain fragments and debris. This table is not applicable when blast fragments and debris are completely confined as in certain test firing barricades.

Table 10-5
Intraline Distances for Liquid Hydrogen -
LOX Propellant Combination (continued)[a]

Net Explosive Weight[b] (lb)	Distance (ft)	
	Barricaded[c] $D=9W^{1/3}$	Unbarricaded $D=18W^{1/3}$
70 000	370	740
75 000	380	760
80 000	390	780
85 000	395	790
90 000	405	810
95 000	410	820
100 000	420	840
125 000	450	900
150 000	480	960
175 000	505	1010
200 000	525	1055
225 000	545	1090
250 000	565	1135
275 000	585	1170
300 000	600	1200
325 000	620	1240
350 000	635	1270
375 000	650	1300
400 000	665	1330
[d]500 000	715	1430
600 000	760	1520
700 000	800	1600
800 000	835	1670
900 000	870	1740
1 000 000	900	1800
1 500 000	1030	2060
2 000 000	1135	2270
2 500 000	1220	2440
3 000 000	1300	2600
3 500 000	1365	2730
4 000 000	1430	2860
5 000 000	1540	3080

[a] From DoD 6055.9 (1992), Table 9-3. In Table 9-3, the distances are given to the nearest foot.
[b] Liquid hydrogen-LOX weights must be converted (see Table 10-2) to TNT-equivalent weights before using this table.
[c] Requirements and specifications for barricaded facilities are given in DoD 6055.9 (1992), Chapter 5.
[d] Distances are based on blast effect of propellant combinations.

Table 10-6
Recommended Distances Between Bulk Gaseous Oxygen Storage and Flammable Gases Stored Aboveground

	Flammable Gas	Quantity	Distance	
			ft	m
NFPA specifications[a]	Liquefied hydrogen	Any	75	22.5
	Other liquefied gases	≤3785 L (1000 gal)	25	7.5
		≥3785 L (1000 gal)		
	Nonliquefied or dissolved gases	≤708 m^3 (25 000 ft^3) (NTP)	25	7.5
		>708 m^3 (25 000 ft^3) (NTP)	50	15
OSHA requirements[b]	Compressed, liquefied, and others in low-pressure gas holders	<142 m^3 (5000 ft^3)	50	15
		≥142 m^3 (5000 ft^3)	90	27

[a] NFPA 50 (1990)
[b] 29 CFR (1986)

11. TRANSPORTATION

11.1 General. Standards and guidelines for the transportation of oxygen are for the protection of people and infrastructure.

11.1.1 Standards and Guidelines.

a. Transportation of GOX or LOX on public thoroughfares is covered by federal and state transportation standards and guidelines (Table E-1, Appendix E). NASA operations for the transport of GOX or LOX shall adhere to these standards.

b. Transportation of GOX or LOX on thoroughfares controlled by NASA is the responsibility of cognizant site authorities and is covered by federal and state labor standards and guidelines (Tables E-1, Appendix E). Where conditions and requirements of use on site are similar to those of public thoroughfares, federal and state transportation standards and guidelines will be used. NASA operations for the transport of GOX or LOX shall adhere to these standards.

11.1.2 Definitions. Gaseous and liquid oxygen can be transported by means that vary from tanks on barges, railroad cars, and trucks to small cylinders. Transport containers are

described according to definitions developed by the DOT (49 CFR 171.8 1986). Basic definitions include the following:

a. Gaseous oxygen is specified as a compressed gas (UN 1072) with a hazard class of 2.2 (nonflammable gas, oxidizer) by DOT (see 49 CFR 172.101 1986 and 49 CFR 173.115 1986).

b. Liquid oxygen is specified as a cryogenic liquid (UN 1073) with a hazard class of 2.2 (nonflammable gas, oxidizer) by DOT (see 49 CFR 172.101 1986 and 49 CFR 173.115 1986).

c. A cargo tank specifies transport dewars designed for highway service, such as over-the-road trailers, tank motor vehicles, compressed gas (CGA) trailers.

d. A cylinder is a pressure vessel with a circular cross section designed for pressures greater than 275.7 kPa (40 psia).

11.2 Transport on Public Thoroughfares

11.2.1 General. While most NASA commerce on public thoroughfares involves commercial carriers, the responsibility for complying with federal and state transportation laws rests not only with them but also with the organizations that handle and receive oxygen.

11.2.2 Training. Personnel involved in handling, receiving, shipping, and transport of a hazardous material must receive Hazardous Materials (HAZMAT) training (49 CFR 172.700 1986). NASA specific training can be obtained from the Hazardous Materials Coordinator, Transportation Branch, Lyndon B. Johnson Space Center (JSC), Houston TX 77058. Contact 713-483-6509 for further details.

11.2.3 Emergency Response. During all phases of transport emergency response, information is required at facilities where hazardous materials are either loaded, stored, or handled (49 CFR 173.600 1986). Advanced planning for a variety of potentially hazardous and disastrous fires and explosions shall be undertaken with full realization that the first priority is reduction of any risk to the lives of emergency personnel and bystanders. NASA shipments of oxygen are monitored by CHEMTREC (the toll-free emergency telephone number is 800-424-9300). Other emergency information sources include the Dow Chemical USA's Distribution Emergency Response System (telephone number, 517-634-4400), and the Union Carbide Corporation's Hazardous Emergency Leak Procedure (HELP), which provides information 24 hours a day (telephone number is 304-744-3487).

11.2.4 Transport Requirements for Gaseous Oxygen. General requirements for the transport of GOX are given in 49 CFR 172.101 (1986), *Hazardous Materials Tabl*e, and 49 CFR 173 (1986), *Shippers-General Requirements for Shipments and Packagin*g. The proper shipping name for GOX is oxygen, compressed.

a. Packaging must be labeled NON-FLAMMABLE GAS, OXIDIZER.

b. Special packaging requirements are given in 49 CFR 173.302 (1986), *Charging of Cylinders with Nonliquified Compressed Gase*s, 49 CFR 173.306 (1986), *Limited Quantities of Compressed Gase*s, and 49 CFR 173.3 15 (1986), *Compressed Gases in Cargo Tanks and Portable Tank*s. Specifications for the qualification, maintenance, and use of cylinders are covered in 49 CFR 173.34 (1986), for the design of cylinders in 49 CFR 178.36

(1986), for the design of cargo tank motor vehicles in 49 CFR 178.337 (1986), and for the loading and unloading of cylinders in 49 CFR 177.840 (1986).

c. Gaseous oxygen in quantities up to 75 kg (165 lb) may be transported on board passenger aircraft or railcars. Up to 150 kg (330 lb) are permitted aboard cargo aircraft. It may be stowed above or below deck on board ship (49 CFR 1992).

11.2.5 Transport Requirements for Liquid Oxygen. General requirements for the transport of LOX are given in 49 CFR 172.101 (1986), *Hazardous Materials Tabl*e, and 49 CFR 173 (1986), *Shippers-General Requirements for Shipments and Packagin*g. The proper shipping name for LOX is Oxygen, refrigerated liquid (cryogenic liquid).

a. Packaging must be labeled NON-FLAMMABLE GAS, OXIDIZER.

b. Packaging requirements are given in 49 CFR 173.316 (1986), *Cryogenic Liquids in Cylinder*s, 49 CFR 173.318 (1986), *Cryogenic Liquids in Cargo Tank*s, and 49 CFR 173.320 (1986), *Cryogenic Liquids, Exception*s. Specifications for the qualification, maintenance, and use of cargo tank motor vehicles are covered in 49 CFR 173.33 (1986), for the design of insulated cargo tanks in 49 CFR 178.338 (1986), and for the loading and unloading of cylinders in 49 CFR 177.840 (1986), *Class 2 (gases) Material*s.

c. Liquid oxygen is not permitted aboard passenger aircraft, passenger railcars, or cargo aircraft. It may be stowed only above deck on cargo ships.

11.3 Transport on Site Controlled Thoroughfares

11.3.1 Standard Commercial Operation on Site. Federal and state transportation guidelines can be applied in lieu of special requirements on NASA-controlled sites where conditions and requirements of use are similar to public thoroughfares.

11.3.2 Noncommercial Equipment and/or Special Operations. Special equipment or operations used for the transport of oxygen must meet federal and state labor requirements (29 CFR 1986) as well as additional requirements of the cognizant NASA authorities.

11.3.3 Guidelines for the Design of Noncommercial Transport Equipment.

11.3.3.1 General guidelines. Where applicable, standard oxygen design practice should be used (paragraph 6 and 7).

a. The tankage design will be in accordance with accepted design practice (ASME 1995a, b).

b. Redundant relief protection must be provided to the tank and piping systems.

c. The design of the undercarriage shall isolate the tank and piping systems from potential collision damage.

d. Controls should prevent oxygen venting while the vehicle is in motion.

e. The trailer should use a fail-safe emergency brake system.

11.3.3.2 Requirements for highway service. The design of noncommercial vehicles must comply with federal and state transportation guidelines (see 11.2 above) for operation on public thoroughfares. In addition to the general guidelines above, the design must meet highway standards for cargo tank design (49 CFR 178.338 1986 for cryogenic transport and 49 CFR 178.337 1986 for gas carriers).

11.3.4 General Operating Procedures. The following guidelines apply to all oxygen transport operations.

11.3.4.1 General.

a. Operational areas should remain clear of nonessential personnel. Appropriate personnel protective equipment should be used. Facilities should maintain necessary deluge systems.

b. Transport systems should be adequately grounded.

c. The operational area should be kept free of combustible materials. Spark-producing and electrical equipment that is within the operational area and is not hazard-proof should be turned off and locked out. All tools used shall comply with established safety requirements

d. All tank inlets and outlets, except safety relief devices, should be marked to designate whether they are covered by vapor or liquid when the tank is filled.

e. The temperature of LOX is so low that liquid air will form on uninsulated transfer equipment and vaporizers. Drip pans should be installed under all such equipment. The concern is that LOX will come off separately from LN_2 as the liquid air returns to a gas. Oxygen will vigorously support combustion of any materials such as paint, oils, or lubricants that make up the cargo tank or may be found on the ground.

f. Trailers shall be equipped with a dry-chemical fire extinguisher. The rating shall not be less than 10 BC.

g. In the event of a oxygen leak the transfer must be stopped and the leak repaired. In the event of a fire the oxygen sources should be isolated as quickly as possible.

h. Operational procedural checklists should be used.

Note: LOX forms shock-sensitive explosive compounds with carbonaceous materials. Transfer operations should not be conducted over asphalt surfaces or porous surfaces such as sand that may hide the presence of oils and greases.

11.3.4.2 Repair operations.

a. Before any type of maintenance is attempted, the system shall be repressurized; all oxygen lines disconnected, drained, or vented, and purged; the operations area inspected; and the security of all systems verified.

b. Repairs, alterations, cleaning, or other operations performed in confined spaces in which oxygen vapors or gases are likely to exist are not recommended until a detailed safety

procedure is established. As a minimum, this procedure shall include the evacuation and purging requirements necessary to ensure safe entry in the confined space. The personnel engaged in the operations shall be advised of the hazards that may be encountered, and at least one person shall be immediately available while the work is being performed to administer emergency rescue, should it be necessary.

11.3.4.3 Venting operations.

a. Where possible, facility venting should be used.

b. In the field, a safe location, remote if possible, should be selected for venting. Consideration should be given to the wind direction so that vented gas will be carried away safely.

11.3.4.4 Inspection. Certification. And Recertification of Mobile Vessels.

a. Mobile vessels require periodic recertification.

b. Mobile Vessels recertified for public thoroughfares.

(1) Department of Transportation specifications require periodic pressure retests of LOX vessels and of pressure-relief valves (49 CFR 173.31 and 173.33 1986).

(2) Testing. See 49 CFR 178.331 (1986) for GOX and 49 CFR 178.338 (1986) for LOX tankage.

11.4 Transportation Emergencies

11.4.1 Initial Actions. The first concern shall be to prevent death or injury. In an accident or emergency try to get the dewar off the road if possible, preferably to an open location. Shut off the tractor-trailer electrical system. Post warning lights and signs and keep people at least 152 m (500 ft) away for GOX or 800 m (½ mile) away for LOX. Contact authorities and obtain help:

CHEMTREC (800-424-9300)

11.4.2 Emergency Actions. Emergency actions to combat leaks and fires involving oxygen tractor-trailers include pulling the vehicle into the least hazardous area and turning the ignition off. For fires originating near the engine, use a fire extinguisher; for tire fires, use water or chemical fire extinguishers or both. Tires may reignite 20 to 30 minutes after the initial fire has been extinguished, so the driver should not leave the scene until the tire temperature is lowered sufficiently. The driver also should not leave the scene until the fire has been completely extinguished and the burning materials cooled. Aid should be requested from the nearest fire or police department or both. On the highway, the environment in which a fire and subsequent damage may occur is difficult to control. An accident may occur at any time and at any place along the route. A controlled release of oxygen from the trailer through venting should take into account all possible ignition sources, vapor dispersion, population exposure, and general safe operations. Flares normally used for highway vehicular accident identification should not be used in close proximity to upset or damage LOX tanks.

12. EMERGENCY PROCEDURES

12.1 Types of Emergencies

12.1.1 Leaks and Spills.

12.1.1.1 Primary Danger. The primary danger from oxygen leaks and spills is a fire or explosion caused by combustible materials in the presence of a high concentration of oxygen. Oxygen-enriched environments greatly increase the rate of combustion of flammable materials.

12.1.1.2 Gaseous Oxygen. GOX leaks can result in oxygen-enriched environments, especially in confined spaces. Impingement of GOX onto an organic material such as grease can cause a fire. When leaks are detected, the source of the oxygen should be halted or disconnected. Any equipment inherently heat- or spark-producing should be turned off or disconnected. Disassembly and repair of leaking lines should begin only after the area has been properly ventilated.

12.1.1.3 Liquid oxygen.

a. Liquid oxygen spills and leaks cause oxygen enrichment of the immediate vicinity as the liquid vaporizes. When a spill or leak is detected, the source of the supply should be immediately halted or disconnected. Any equipment inherently heat- or spark-producing should be turned off or disconnected. Affected areas should be completely roped off or otherwise controlled to limit personnel movement. The equipment or piping should be thoroughly vented and warmed before repair of the leak is attempted.

b. Liquid oxygen spills on pavements such as asphalt have resulted in impact-sensitive conditions that caused explosions from traffic or dropped items (Weber 1966). The same condition can occur from LOX leakage onto concrete that is contaminated with oil, grease, or other organic materials. The affected areas should be completely roped off or otherwise controlled to limit vehicle and personnel movement. Electrical sources should be turned off or disconnected. No attempt should be made to hose off the affected area, and the area should not be cleared for access until the oxygen-rich cold materials are adequately warmed and absorbed oxygen has evaporated.

12.1.2 Overpressurization. Oxygen cannot be kept liquid if its temperature rises above the critical temperature of -118.6 °C (-181.4 °F). Consequently, if LOX is trapped in a closed system and allowed to warm, extreme pressures can overpressurize the system. For example, LOX trapped between valves can rupture the connecting pipe. Pressure relief of some kind must be provided where trapping might occur. Moreover, relief and vent systems must be sized to accommodate the flow so that excessive backpressures will not occur. Cryogenic liquid storage vessels are protected from overpressurization by a series of pressure relief devices. These relief devices are designed to protect the inner vessel and the vacuum-insulated portion of the tank from failures caused by inner and outer shell damage, overfilling, and heat load from insulation damage or from a fire.

a. In specific instances, such as when these vessels are involved in a fire which impinges upon the ullage area of the tank, container failure could result. In these instances, water should be directed onto the flame-impinged portion of the tank to allow the tank to cool. Enough water should be directed onto this area to keep the tank wet. Water should not be directed toward the relief devices, as the venting gas may cause the water to freeze and seal off the relief device.

b. Frost appearing on the outer wall of an insulated cryogenic vessel is indicative of vessel insulation loss. Frost appearance is only a clue to the type of insulation loss. This

insulation loss could be caused by a movement of the insulation in the annular area of the tank, by loss of vacuum in the annular area, or by inner vessel failure. Assistance from knowledgeable and responsible pressure-systems personnel should be obtained.

(1) Personnel should listen and watch for indication of pressure-relief device actuation. Constant relief actuation is an indication that a major problem has occurred. Special care should be taken if the sound of the relief device changes and becomes higher pitched while operating.

(2) Continued pressure rise while the relief device is actuated indicates a major system malfunction. If constant relief device actuation is occurring, immediately evacuate the area and physically rope off and control the area if this can be performed safely. Venting the vessel is recommended, if possible. Do not apply water, as this would only act as a heat source to the much colder oxygen and aggravate the boiloff.

12.1.3 Transportation Emergencies. Vehicular accidents involving oxygen transports can result in leaks, spills, and container rupture. Spills and leaks may result in fires and explosions. The first priority in an emergency situation is to protect personnel from hazards resulting from a spill or release of oxygen. The next priorities are protection of property and the environment, which should occur only after personal safety hazards have been mitigated.

a. Consult the DOT Emergency Response Guidebook (DOT P5800.5 1993) and other references shown below for information regarding the emergency action to take in the event of an accident involving LOX or GOX.

b. Additional information can be obtained 24 hours a day by calling the Chemical Transportation Emergency Center (CHEMTREC) at **800-424-9300**.

c. Other emergency procedure information can be obtained from the Association of American Railroads (AAR), Bureau of Explosives, *Emergency Handling of Hazardous Materials in Surface Transportatio*n, and the National Response Center, US Coast Guard Headquarters, Room 2611, 2100 Second Street, SW, Washington, DC 20593-0001, telephone **800-424-8802** or **202-267-2675**.

12.1.4 Personal Exposure to Cryogenic Liquid or Cold Vapor (Cold Injury).

Note: This information represents the most current NASA Headquarters stand on cold injuries. It may change, and anyone dealing with oxygen systems should keep informed on the latest recommended procedures. This entire section is referenced by a letter from the director of the NASA Occupational Health Office.[1]

Direct physical contact with LOX, cold vapor, or cold equipment can cause serious tissue damage. Medical assistance should be obtained as soon as possible for any cold injury. First aid procedures to be administered by medical professionals are beyond the scope of this handbook. However, proper immediate bystander response should be as follows:

a. If it is safe to do so, remove the patient from the source of the cold.

[1] Letter from Marshall S. Levine, Director, Occupational Health Office, NASA Headquarters, 1991.

b. In the event of limb-size or smaller cryogenic exposure, appropriate response may include an attempt to rapidly warm the affected area with moist heat from a shower, eyewash or warm water bath, not to exceed 38.9 °C (102 °F).

Note: Do not allow a heavy stream of water to impinge directly on frozen skin. In some cases, it is safest to do nothing other than cover the involved area until professional medical help is available.

c. Massive full-body cryogenic exposures present significant additional concerns, but removal of the victim from the exposure atmosphere and keeping the victim's airway open are important. Loosely wrapping the victim in a blanket until the arrival of the ambulance team is also advised.

d. Some important **don't**s:

(1) **Don't** remove frozen gloves, shoes, or clothing. Salvageable skin may be pulled off inadvertently.

(2) **Don't** massage the affected part.

(3) **Don't** expose the affected part to temperatures higher than 44°C (112 °F), such as a heater or a fire. This superimposes a burn and further damages already injured tissues.

(4) **Don't** apply snow or ice.

(5) **Don't** apply ointments.

(6) **Don't** allow any smoking, open flames, or other hazardous conditions near the victim.

12.2 Emergency Assistance Plans and Procedures

12.2.1 Policy.

a. Each NASA center is responsible for the preparation of emergency plans and implementing emergency procedures. Evacuation routes and requirements and responsibilities of site personnel are included in these plans. Dry runs of safety procedures should be conducted using both equipment and personnel and periodic safety inspections, and surveys should be performed to ensure that emergency procedures are being performed safely.

b. Fire drills, general safety meetings, and facility inspections should be held to develop and evaluate emergency plans and procedures.

c. Training should familiarize personnel with the physical, chemical, and hazardous properties of LOX and GOX and with the nature of the facility's major process systems. Operator training should include oxygen handling practice and emergency training in handling spills and fires. Supervisors should keep operators informed of any operational or safety procedure changes.

d. Supervisors shall periodically monitor oxygen-handling operations to ensure that all safety precautions are taken during transfer, loading, testing, and disposal. Local fire or other

emergency personnel should be informed of any unusual or unplanned operations. Also, the accessibility and useability of fire protection and spill response equipment shall be verified before oxygen-handling operations commence.

e. Written emergency procedures should be included in all operating procedures involving oxygen.

12.3 Fire-Fighting Techniques. When fighting a fire involving oxygen-enriched atmospheres, the first step should be to shut off the oxygen supply and, if possible, to shut off and remove fuel sources. Combustible materials must be cooled below their ignition temperatures to stop the fire. Water has been shown to be an effective extinguishing agent for fires involving oxygen-enriched atmospheres. In some cases, when the oxygen supply cannot be shut off, the fire may burn so vigorously that containment and control is more prudent than trying to put out the fire.

a. If fuel and LOX are mixed but not burning, quickly isolate the area from ignition sources, evacuate personnel, and allow the oxygen to evaporate. Mixtures of fuel and LOX are an extreme explosion hazard.

b. If a fire is supported by LOX flowing into large quantities of fuel, shut off the oxygen flow. After the excess oxygen is depleted, put out the fire with the extinguishing agent recommended for the particular fuel.

c. If a fire is supported by fuel flowing into large quantities of LOX, shut off the fuel flow and allow the fire to burn out. If other combustible material in the area is burning, water streams or fogs may be used to control the fires.

d. If large pools of oxygen and water-soluble fuels, such as hydrazine or alcohol, are burning, use water to dilute the fuel and reduce the fire's intensity.

APPENDIX A

CHEMICAL AND PHYSICAL PROPERTIES

A.1 LIQUID OXYGEN (LOX)

A.1.1 Physical and Chemical Properties.

a. High-purity LOX is a light blue, odorless, transparent liquid. LOX is chemically stable, is not shock-sensitive, and will not decompose. It is a cryogenic liquid which boils vigorously at ambient temperature.

b. The physical and chemical properties of LOX are listed in Roder and Weber (1972). These include atomic weight 16, molecular weight 31.9988, density (at the boiling point and 1 atmosphere) 1.141 kg/l (71.2311 lb/ft^3), boiling point -182.97°C (-297.35°F), heat of fusion and vaporization 444.8 J/mol (5.976 BTU/lb) and 6812.3 J/mol (91.568 BTU/lb), and specific heat at constant pressure (C_p) 54.28 J/mol-K (0.405 BTU/lb-°R).

c. Liquid Oxygen is a strong oxidizer that vigorously supports combustion.

d. Most common solvents are solid at LOX temperatures (-218.8°C to -183.0°C (-361.8°F to -297.4°F)). LOX is completely miscible with liquid nitrogen and liquid fluorine. Methane is highly soluble in LOX, light hydrocarbons are usually soluble, and acetylene is soluble only to about 4 ppm.

A.2 GASEOUS OXYGEN (GOX)

A.2.1 Physical and Chemical Properties.

a. Gaseous oxygen is an odorless, colorless, transparent gas.

b. The physical and chemical properties of GOX are included in Roder and Weber (1972). They include density 1.43x10^{-3} kg/1 (0.0892 lb/ft^3) at STP, specific heat at constant pressure C_p = 30.77 J/mol-K (0.230 BTU/lb-°R), and specific heat at constant volume C_v = 21.28 J/mol-K (0.150 BTU/lb-° R).

c. Gaseous oxygen is a strong oxidizer that vigorously supports combustion.

A.3 REFERENCES

Roder, H. M. and L. A. Weber. “Thermophysical Properties.” *ASRDI Oxygen Technology Survey: Volume* 1, NASA SP-3071 (1972).

APPENDIX B

MATERIALS TESTING METHODS AND TEST DATA

B.1 Many tests have been developed for evaluating materials for oxygen systems, including studies of ignition and burning characteristics and the causes of oxygen-related failures (Bryan and Lowry 1986; Steinthal 1982; Ordin 1973; NHB 8060.1C (1991); Stoltzfus and Benz 1984). These tests provide a means to rank materials.

B.2 Experimental methods used for determining and evaluating the ignition and combustion of materials include:

B.2.1 Ignition Tests.

a. Mechanical impact

b. Pneumatic impact

c. Autoignition

d. Friction

e. Particle impact

f. Resonance cavity

B.2.2 Combustion Tests.

a. Calorimeter

b. Limiting oxygen index (LOI)

c. Upward flammability of materials in gaseous oxygen (GOX)

B.3 Ignition Tests

B.3.1 Mechanical Impact Test Method (ASTM G 86 1991: ASTM D 2512 1991: NHB 8060.1). This test method is to determine the sensitivity of materials to ignition by mechanical impact in liquid oxygen (LOX) or GOX at pressures from 0.1 to 68.9 MPa (14.7 to 10 000 psia). The mechanical impact tester consists of a test chamber with a striker pin and striker pin counterloader. It also includes the necessary test chamber purge, pressurization and vent systems; a plummet, plummet guide tracks, plummet hold-release mechanism and a plummet rebound limiter; and controls and instrumentation necessary for performing the test and monitoring the test chamber for evidence of reaction. For LOX compatibility, the test system and samples should be configured as described in ASTM D 2512 (1991). For GOX compatibility, the test system and samples should be configured as described in ASTM G 86 (1991).

B.3.2 Autoignition Temperature (AIT) Test Method (ASTM G 72 1991). This test measures the minimum sample temperature at which a material will spontaneously ignite when heated in an oxygen or oxygen-enriched atmosphere. AIT's of nonmetals are commonly measured by methods such as in ASTM G 72 (1991). Metals autoignite at much higher temperatures than nonmetals. These temperatures are much higher than those that normally would occur in actual oxygen systems. The temperature at which a material will ignite spontaneously varies with the system geometry and heating rate. The test system consists of a reaction vessel (bomb), a sample holding assembly, and a system whereby this reaction vessel can be charged with oxygen and heated. Thermocouples and/or pressure transducers may be used to determine the temperature at the time ignition occurs.

B.3.3 Pneumatic Impact Test Method (NHB 8060.1: ASTM G 74 1991). This test method provides reaction sensitivity of materials to dynamic pressure impacts by gases such as oxygen, air, or gas blends containing oxygen. The test system (ASTM G 74 1991) consists of a high-pressure accumulator capable of being pressurized with oxygen or nitrogen to 69 MPa (10000 psia), a quick-opening valve, and a test chamber with a test sample.

B.3.4 Frictional Heating Test Method. This test method provides the susceptibility of materials to ignition by friction in GOX and LOX, air, or blends of gases containing oxygen. The ends of two hollow cylinders are rubbed against one another in an oxygen-enriched atmosphere. Test variables include oxygen pressure, normal loads, and rubbing velocity. At standard test conditions, a material is ranked based on the Pv product at ignition (where P is load divided by the initial cross-sectional area of the sample and v is the relative surface velocity).

a. The GOX frictional heating apparatus described here is also described in Benz and Stoltzfus (1986). It consists of a high-pressure test chamber, an electrical motor and transmission assembly, and a pneumatic actuation cylinder. The high-pressure test chamber, fabricated of Monel®, consists of a cylindrical chamber with a replaceable nickel sleeve inside. The chamber contains a rotating shaft that extends through the chamber by a series of bearings and seals. The shaft is connected at one end to a drive motor/transmission assembly that is capable of rotating the shaft up to 30 000 rpm. The other end of the shaft is connected to a pneumatically actuated cylinder that allows axial movement of the shaft to apply up to 4450 N (1000 lbf) normal load on the test specimens. The rotating test specimen is mounted on the shaft, and the stationary test specimen is affixed to the test chamber.

b. The LOX frictional heating test system is similar to the GOX frictional heating test system, except the LOX frictional heating test system is configured in a vertical position and has a fluid piping system for LOX.

B.3.5 Particle Impact Test Method. This test method provides the susceptibility of a material to ignition by particle impact. A stream of oxygen with one or more entrained particles is impinged on a metal target. The particles may be capable of igniting themselves upon impact. Test variables include oxygen pressure, oxygen temperature, oxygen velocity; and number, size, quantity, and material of the particles.

B.3.5.1 Supersonic Particle Impact Test System. The supersonic particle impact test system is essentially the same as that described in Benz, Williams, and Armstrong (1986). It consists of

a. A gas inlet and flow straightener

b. A particle injector and converging nozzle

c. A diverging nozzle and test sample holder GOX and the particle, injected just upstream of the converging nozzle, enter through the inlet section of the chamber and are accelerated to supersonic velocity as they pass through the converging and diverging nozzle. After the diverging nozzle, the fluid enters a short section with a constant cross-sectional area to establish the fluid velocity before impact. The particle impacts a target made of the test material.

B.3.5.2 Subsonic Particle Impact Test System. The subsonic particle impact test system is essentially the same as the one described in Williams, Benz, and McIlroy (1988). It consists of a particle impact chamber, in which particles up to 5 g (0.01 lb) can be injected in flowing oxygen upstream of a target specimen. The particles entrained in the oxygen are carried through the test chamber where they impact the target made of the test material. The oxygen and particles flow through holes on the periphery of the target and finally are vented to the atmosphere through the flow control orifice.

B.3.6 Resonance Cavity Ignition Test Method. This test method was used to determine if resonance ignition could occur (Phillips 1975). It was developed in 1975, but was not maintained after the early tests were completed. The test flow system consists of high-pressure gaseous nitrogen and oxygen sources, stainless steel flow lines, pressure controllers, fire valves, and an exit flow control valve. The controllers establish and maintain the constant pressure delivered to the resonance apparatus. The resonance test apparatus used is described in detail in Phillips (1975); it consists of an inlet tube, an exit tube, and a resonance tube forming a tee. The temperatures generated at the base of the resonance tube are in excess of 538°C (1000°F) for both GOX and nitrogen.

B.4 Combustion Tests.

B.4.1 Calorimeter Test (ASTM D 2382 1991: ASTM D 2015 1991). This test measures the heat evolved per unit mass (the heat of combustion) when a material is completely burned in 2.5 to 3.5 MPa (368 to 515 psia) of oxygen at constant volume. Several procedures such as those listed in ASTM D 2382 (1991) and ASTM D 2015 (1991) are used. For many fire-resistant materials useful in oxygen systems, measured amounts of combustion promoter must be added to ensure complete combustion.

B.4.2 Limiting Oxygen Index Test (ASTM D 2863 1991). This is a determination of the minimum concentration of oxygen in a flowing mixture of oxygen and a diluent that will just support propagation of combustion. ASTM D 2863 (1991) applies to nonmetals at atmospheric pressure. The test method for metals has not been standardized; it is being reviewed by the ASTM G 4 Committee.

B.4.3 Upward Flammability of Materials in GOX (NHB 8060.1). This test determines the flammability of materials in GOX. In it, a material specimen is exposed to a standardized promoter (easily ignited material) or other ignition source. With a standardized promoter, the results give the relative ranking of the materials. The promoted combustion test system described here is similar to the one described by Stoltzfus et al. (1988). The test system consists of a cylindrical stainless steel chamber with an internal volume of approximately 740 cm^3 (45 in^3). The chamber can be pressurized to 68.9 MPa (10 000 psia). The chamber has a copper liner and a copper base plate to protect it from the burning material. The test specimen, with an aluminum promoter at the

bottom, is held at the top by the specimen mount. The ignition of the aluminum promoter is accomplished by electrically heating an aluminum-palladium wire wrapped around the promoter.

B.5 Metal Test Data. Several tests for metallic materials' ignition and flammability have been developed in recent years. These tests provide a good indication of the relative ranking of metallic materials for ignitability, but rarely provide absolute information on ignitability in a specific application. Configurational tests have to be conducted if such information is required. Additional tests that are more suitable for the specific application of a metallic material may become available in the future. The relative ranking of materials is partially dependent on the test method used. Three tests commonly used by NASA are the promoted combustion test (upward flammability test), the frictional heating test, and the particle impact test. At present, the upward flammability test (NHB 8060.1C 1991) is used to obtain a basic ranking of metallic materials' flammability. Particle impact and frictional heating tests are valuable for assessing ignitability when particle impact or friction between moving parts can occur.

B.5.1 Ignition Test Data.

B.5.1.1 Mechanical Impact Test. Mechanical impact test methods (NHB 8060.1 Tests 13A and 13B, "Mechanical Impact for Materials in Ambient Pressure LOX" and "Mechanical Impact for Materials in Variable Pressure GOX and LOX" (1991)) have been used for evaluating the ignition characteristics of metallic materials in oxygen systems. While mechanical impact tests are not presently used to evaluate metals for oxygen service, a large body of data for mechanical impact of metals exists; some can be found in Key and Riehl (1964).

B.5.1.2 Autoignition Temperature Test. AIT's as described in ASTM G 72 (1991) are not available; however, some AIT's of solid metals are given in Table B-1. Ignition temperature of metals are dependent on the test procedure, material configuration, and presence or lack of oxide layers.

B.5.1.3 Pneumatic Impact Test. Metals have been shown not to ignite because of gaseous pneumatic impact.

B.5.1.4 Friction.

a. Ignition by frictional heating is very sensitive to the characteristics of the metallic surfaces. This test is appropriate for materials selection only if frictional heating is a possible concern.

b. Data on the ignitability of metallic materials by frictional heating are shown in Tables B-2 and B-3. The *Pv* product is a measure of the energy absorbed per unit area of rubbing surface per unit time; metals and alloys with low *Pv* products at ignition are more easily ignited than those with high *Pv* products at ignition. Relative rankings of metallic materials for ignitability by frictional heating show some differences from the relative rankings by promoted combustion tests. These differences are significantly reduced if the friction coefficient μ of the metallic surface is considered and relative rankings are based on the product μPv (Stoltzfus, Benz, and Homa 1989).

c. Ignition of metallic, materials by frictional heating can occur in LOX systems as well as in GOX. The ignitability of metallic materials is lower in LOX than in GOX because of the low initial temperatures. However, once ignition takes place, propagation is inevitably more extensive because of the large quantity of oxygen present in the condensed phase. Combustion occurs in

oxygen gas caused by frictional heating vaporizing the liquid. Therefore, the relative ranking of metallic materials in LOX is essentially the same as that in ambient temperature GOX.

B.5.1.5 Particle Impact.

a. Data on the ignitability of metallic target materials by impact of single, large, supersonic, aluminum particles in the supersonic particle impact test system are provided in Figures B-1a and B-1b. The figure presents ignition (recorded as ignition, partial burn, or no ignition) as a function of target temperature for a supersonic particle impact tester inlet pressure of 27.5 MPa (4000 psig); 1600-μ particles were used for the testing. Under these conditions, both particle velocity and the pressure at the target increased slowly with target temperature; the pressure at the target varied from approximately 3.6 to 4.0 MPa (520 to 580 psia), and the particle velocity at the target varied from approximately 370 to 430 m/s (1200 to 1400 ft/s). The data provide a rough relative ranking of the resistance of metallic materials to ignition by particle impact; however, the test parameters are too arbitrary for the data to provide absolute pass/fail criteria in use conditions.

b. Other metallic materials have been used as the particles, but ignitions have not been observed except with aluminum 6061 targets and 304 stainless steel particles (Benz, Williams, and Armstrong 1986). The 304 stainless steel particles imbedded in the aluminum 6061 targets but did not ignite (Benz, Williams, and Armstrong 1986). Data from subsonic particle impact tests, conducted at WSTF and elsewhere, indicate that fine iron particles may be ignited by impact on static targets at flow velocities as low as 35 m/s (115 ft/s), although such burning iron particles were not found to ignite iron or steel targets at flow velocities below about 40 m/s (150 ft/s) (Williams, Benz, and McIlroy 1988). Results from this test program indicate that ignition may occur at higher iron particle concentrations. Data on subsonic particle impact by particulate from other metallic materials and polymeric materials are lacking at this time. The data obtained to date suggest that metallic powders are more likely to cause particle impact ignition than large, single particles.

c. The relative ranking of metal target materials is assumed to be similar for ignition by large, single particles and by powders, but no definitive study has been conducted. Similarly, the worst-case pressure is believed to be the highest system pressure, but this assumption has not been verified experimentally. Temperature effects are believed to depend on the size and ease of oxidation of the particulate. Usually, ignitability increases with increasing temperature; however, particulate oxidation without ignition at high temperatures can reduce the ignitability.

B.5.1.6 Resonance Cavity. Data from resonance testing are described by Phillips (1975).

B.5.2 Combustion Test Data.

B.5.2.1 Calorimeter. The heats of combustion for selected metals and alloys are shown in Table B-4.

B.5.2.2 Limiting Oxygen Index. The ASTM D 2863 (1991) standard limiting oxygen index test is not commonly used for metals. However, some data for some aluminum alloys and bronzes are reported by Benning, Zabrenski, and Ngoc (1988).

B.5.2.3 Upward Flammability of Materials in GOX.

a. The promoted combustion test has been adopted as a standard metals flammability test for NHB 8060.1. This test determines the ability of a metallic rod to propagate flame upward when ignited at the bottom by an ignition source. Threshold pressure is the minimum pressure required for self-sustained combustion. For any metallic material, the flammability increases with increasing pressure and decreases with increasing thickness (the standard sample for the test is 0.32 cm (0.125 inch) thick); the quantity of promoter does not affect the flammability. Table B-5 shows threshold pressures of some common metallic materials. It should be noted that upward flame propagation is used for this test because it provides more repeatable data and better distinguishes the performance of different materials than does downward propagation. However, metallic materials burn downward more readily than upward and materials that are self-extinguishing in upward propagation may burn completely in the downward configuration. Nevertheless, the test severely evaluates metallic materials because the aluminum promoter is a far more intense ignition source than typical ignition sources in real systems (such as burning polymeric materials). Details of this test are given in NHB 8060.1, Stoltzfus, Benz, and Homa (1989), and Stoltzfus, Lowrie, and Gunaji (1991).

b. Relative rankings from promoted combustion and particle impact tests appear to be similar, although the scarcity of particle impact data makes this conclusion somewhat tentative. A rough correlation exists between heat of combustion and ignitability and flammability in these two tests. Thus, the materials that ignite least easily and propagate fire least readily are usually those with the lowest heats of combustion or those containing elements with low heats of combustion. Specific exceptions to this general rule do exist. For example, aluminum bronzes containing 93-percent copper (low heat of combustion and relatively nonflammable) and only 7-percent aluminum (high heat of combustion and highly flammable) are highly flammable in high-pressure oxygen.

B.6 Nonmetals Test Data

a. Test data on reactions of nonmetals with high-pressure oxygen have been obtained principally from NHB 8060.1 Tests 13b and 14, “Mechanical Impact for Materials in Variable Pressure GOX and LOX” and “Pressurized Gaseous Oxygen Pneumatic Impact for Nonmetals,” (NHB 8060.1). In an operating high-pressure oxygen system, the potential for pneumatic impact ignition is greater than that for mechanical impact ignition (Moffett et al. 1988). The standard pneumatic impact test is not mandatory for nonmetals. The statistical base on which materials decisions are made for both tests is weak; specifically the ability of these tests to distinguish batch differences in materials has been disputed (Bryan 1983). Test data on reactions of nonmetals with LOX have been obtained with NHB 8060.1 Test 13A (Bryan 1983). GOX mechanical impact usually provides a more sensitive materials test than LOX mechanical impact; the sensitivity is known to increase with increasing pressure (Bryan 1983). The LOX mechanical impact test, however, has provided a large database for nonmetals and provides valuable information on their suitability for oxygen service.

b. The mechanical impact test and the pneumatic impact test generally give similar results for a given material. Polymeric materials are rarely ignited by pneumatic impact at pressures below 1.7 MPa (250 psia), because the temperatures reached by adiabatic compression are below the AIT of most polymeric materials. However, they may react as a result of mechanical impact at pressures below 1.7 MPa (250 psia).

c. Mechanical impact and pneumatic impact test conditions are usually more severe than those in actual use. Data obtained are conservative and allow a reasonable margin of safety. However, ignition by adiabatic compression heating is very configuration-dependent, and

configurational testing or additional analysis should be conducted for systems. For example, flexible hose materials may not react in the standard NHB 8060.1 Test 14 at 41 MPa (6000 psia), but a flexible hose constructed of these materials has been shown to ignite when pressurized to only 6.9 MPa (1000 psia) through a quick-opening valve similar to that used in the pneumatic impact test (Janoff et al. 1989). The flexible hose can still be used at 41 MPa (6000 psia) if the system is designed so that pressurization is slow and the downstream end of the hose is not closed (see paragraph 7).

d. The potential for ignition by adiabatic compression can be assessed as follows (ASTM G 63 1991).

(1) Calculate the maximum temperature the oxygen can reach with the following equation:

$$\frac{T_f}{T_i} = \left[\frac{P_f}{P_i}\right]^{\left(\frac{n-1}{n}\right)}$$

where:

Tf = final temperature (abs)
Ti = initial temperature (abs)
Pf = final pressure (abs)
Pi = initial pressure (abs)
n = ratio of specific heats (1.40 for oxygen)

Thus, for a final pressure of 34.5 kPa (5000 psia) from ambient conditions (10°C (67.7°F), 101.4 kPa (14.7 psia)), the maximum theoretical temperature is 1277°C (2330°F).

(2) Table B-6 shows polymer properties relating to ignition and combustion. If the calculated temperature exceeds the AIT of the polymer, then the potential for ignition exists.

(3) If ignition can occur, the potential for igniting adjacent materials must be considered. Calculation of adiabatic flame temperature will give an indication of this potential. Representative values of polymeric adiabatic flame temperature are given in Table B-6 for three different pressures. Polymers are also ranked according to heat of combustion and the AIT (Lockhart, Hampton, and Bryan 1989). Polymers with high heats of combustion and high carbon black-filler content are more likely to ignite adjacent materials (Shelley 1991).

Note: The polymers in the tables are representative of available polymeric materials.

(4) The ignition of adjacent materials is dependent on the heat transfer from the burning polymer to those materials. This can only be assessed for a specific configuration.

e. Other tests exist that may provide useful information on the relative ignitability of nonmetals in high-pressure oxygen. Autoignition tests have been conducted in high-pressure oxygen using ASTM G 72 (1991) and Steinthal (1982). Frictional heating (Benz and Stoltzfus 1986) has been used as an ignition test. Additional test methods for assessing the ignition potential of nonmetals are under development (Tapphorn, Shelley, and Benz 1991).

f. Combustion tests for polymers are the calorimeter (ASTM D 2015 1991), limiting oxygen index (ASTM D 2863 1991) and the upward flammability of polymers (NHB 8060.1). The oxygen index data in Table B-6 indicate that the majority of polymeric materials are flammable at ambient pressures (0.1 Mpa (14.7 psia)) in 100-percent oxygen. These data emphasize the need for careful system design, because polymers are often used in systems that are at higher than ambient pressures.

Table B-1
Selected Values for Ignition Temperatures of Solids[a]

Metal	Ignition Temperature	
	(K)	(°F)
Mild Steel	4248 to 4410	2240 to 2330
W	4302 to 4446	2270 to 2350
Ta	4284 to 4428	2260 to 2340
Ti Alloys		
RC-70	5400 to 5544	2880 to 2960
RS-70	5418 to 5508	2890 to 2940
RS-110-A	5364 to 5454	2860 to 2910
RS-110-BX	5346 to 5472	2850 to 2920
Stainless Steels		
430	4644 to 4698	2460 to 2490
Berylco® 10	3366 to 3384	1750 to 1760
Mg	2323	1171
Mg Alloys		
20% Al	1900	936
70% Zn	2023	1004
25% N	1897	934
20% S	2194	1099
63% Al	1767	862
Fe	3286	1706
Sr	2606	1328
Ca	2055	1022
Th	1893	932
Ba	840	347
Mo	2736	1400
U	1310	608
Ce	1310	60

[a] Reynolds (1959)

Table B-2
Friction Ignition Test Data for Similar Pairs[a,b]

Test Materials		*Pv* Product at Ignition	
Stator	Rotor	$W/m^2 \times 10^{-8}$	$(lbf/in^2 \times ft/min \times 10^{-6})$
Inconel® MA754	Inconel® MA754	3.96 - 4.12[c]	11.30 - 11.75
Haynes® 214	Haynes® 214	3.05 - 3.15	8.73 - 8.98
Inconel® MA758	Inconel® MA758	2.64 - 3.42	7.53 - 9.76
Nickel 200	Nickel 200	2.29 - 3.39	6.54 - 9.66[d]
Tin Bronze	Tin Bronze	2.15 - 2.29	6.15 - 6.55[e]
Hastelloy® C-22	Hastelloy® C-22	2.00 - 2.99[f]	5.72 - 8.52
Inconel® 600	Inconel® 600	2.00 - 2.91	5.70 - 8.30[d]
Inconel® MA6000	Inconel® MA6000	1.99 - 2.66	5.68 - 7.59
Glidcop Al-25	Glidcop Al-25	1.95 - 3.59	5.56 - 10.2
Hastelloy® 230	Hastelloy® 230	1.79 - 2.19	5.10 - 6.24
NASA-Z	NASA-Z	1.77 - 2.63	5.05 - 7.52
Cu Zr	Cu Zr	1.68 - 3.19	4.81 - 9.11
Inconel® 625	Inconel® 625	1.62 - 1.73[f]	4.65 - 4.94
Hastelloy® B-2	Hastelloy® B-2	1.61 - 2.16[f]	4.60 - 6.12
Waspaloy	Waspaloy	1.55 - 2.56	4.45 - 7.31
Monel® 400	Monel® 400	1.44 - 1.56	4.12 - 4.46[d]
Monel® 400	Monel® 400	1.42 - 1.55[g]	4.05 - 4.43
Haynes® 230	Haynes® 230	1.40 - 1.82	4.00 - 5.20
Monel® K-500	Monel® K-500	1.37 - 1.64	3.91 - 4.68[d]
13-4 PH	13-4 PH	1.31 - 2.06	3.74 - 5.88[e]
Hastelloy® C-276	Hastelloy® C-276	1.21 - 2.82[f]	3.45 - 8.06[f]
Incoloy 903	Incoloy 903	1.20 - 1.44	3.41 - 4.11
Inconel® 718	Inconel® 718	1.10 - 1.19	3.13 - 3.37
17-4 PH (H 900)	17-4 PH (H 900)	1.00 - 1.21	2.87 - 3.45
Yellow Brass	Yellow Brass	0.97 - 1.22	2.77 - 3.49
Hastelloy® X	Hastelloy® X	0.93 - 1.05	2.66 - 3.02[d]

[a] -2.5 cm (1 in.) diameter x 0.25 cm (0.1 in.) wall x 2 cm (0.8 in.) specimens rotated axially, horizontally in stagnant 6.9 MPa (1000 psia), aviator's breathing grade oxygen. Tests were conducted by keeping v constant at 22.4 m/s (73.5 ft/s) and increasing P at a rate of 35 N/s until ignition.

[b] All unreferenced data are from previously unpublished frictional heating tests performed at NASA White Sands Test Facility.

[c] This material did not ignite at these *Pv* products.

[d] Benz and Stoltzfus (1986)

[e] Stoltzfus et al. (1988)

[f] Bryan, Stoltzfus, and Gunaji (1993)

[g] Bryan, Stoltzfus, and Gunaji (1991)

Table B-2
Friction Ignition Test Data for Similar Pairs (continued)[a,b]

Test Materials		*Pv* Product at Ignition	
Stator	Rotor	$W/m^2 \times 10^{-8}$	$(lbf/in^2 \times ft/min \times 10^{-6})$
Hastelloy® G-30	Hastelloy® G-30	0.90 - 1.28[c]	2.58 - 3.68
14-5 PH	14-5 PH	0.88 - 1.04	2.51 - 2.96
304 SS	304 SS	0.85 - 1.20	2.43 - 3.41
17-4 PH	17-4 PH	0.85 - 1.07	2.42 - 3.05
Inconel® 706	Inconel® 706	0.81 - 1.21	2.33 - 3.45
303 SS	303 SS	0.78 - 0.91	2.25 - 2.60
Stellite® 6	Stellite® 6	0.79 - 0.82	2.25 - 2.35
316 SS	316 SS	0.75 - 0.86[d]	2.14 - 2.46
Brass CDA 360	Brass CDA 360	0.70 - 1.19	1.98 - 3.41[f]
17-4 PH (Condition A[e])	17-4 PH (Condition A)	0.61 - 1.05	1.75 - 2.99
Invar® 36	Invar® 36	0.60 - 0.94	1.71 - 2.68[f]
Incoloy MA 956	Incoloy MA 956	0.53 - 0.75	1.51 - 2.14
316 SS	316 SS	0.53 - 0.86	1.50 - 2.46[f]
440C SS	440C SS	0.42 - 0.80	1.19 - 2.28
Nitronic 60	Nitronic 60	0.29 - 0.78	0.82 - 2.22
Incoloy 909	Incoloy 909	0.29 - 1.15	0.85 - 3.30
Aluminum 6061-T6	Aluminum 6061-T6	0.061	0.18[f]
Ti-6Al-4V	Ti-6Al-4V	0.0035	0.01[f]

[a] -2.5 cm (1 in.) diameter x 0.25 cm (0.1 in. wall x 2 cm (0.8 in.) specimens rotated axially, horizontally in stagnant 6.9 MPa (1000 psia), aviator's breathing grade oxygen. Tests were conducted by keeping v constant at 22.4 m/s (73.5 ft/s) and increasing P at a rate of 35 N/s until ignition.

[b] All unreferenced data are from previously unpublished frictional heating tests performed at NASA White Sands Test Facility.

[c] Bryan, Stoltzfus, and Gunaji (1993)

[d] Bryan, Stoltzfus, and Gunaji (1991)

[e] Solution Annealed

[f] Stoltzfus et al. (1988)

Table B-3
Friction Ignition Test Data for Dissimilar Pairs[a,b]

Test Materials		*Pv* Product at Ignition	
Stator	Rotor	$W/m^2 \times 10^{-8}$	$(lbf/in^2 \times ft/min \times 10^{-6})$
Monel® K-500	Hastelloy® C-22	1.57 - 3.72	4.51 - 10.61
Monel® K-500	Hastelloy® C-276	1.41 - 2.70	4.00 - 7.70[c]
Monel® K-500	Hastelloy® G-30	1.34 - 1.62	3.81 - 4.63
Ductile cast iron	Monel® 400	1.28 - 1.45	3.65 - 4.13[c]
Gray cast iron	410 SS	1.19 - 1.48	3.39 - 4.24[c]
Gray cast iron	17-4 PH (H 1150 M)	1.17 - 1.66	3.35 - 4.75[c]
Cu Be	Monel® 400	1.10 - 1.20	3.14 - 3.42
Ductile cast iron	410 SS	1.10 - 1.23	3.12 - 3.43[c]
AISI 4140	Monel® K-500	1.09 - 1.35	3.10 - 3.85[c]
Ductile cast iron	17-4 PH (H 1150 M)	1.09 - 1.17	3.00 - 3.35[c]
Monel® 400	Nitronic 60	1.03 - 1.69	2.93 - 4.78
Inconel® 718	17-4 PH SS	1.02 - 1.06[d]	2.91 - 3.03
Bronze	Monel® K-500	0.99 - 1.84	2.82 - 5.26[c]
Tin bronze	304 SS	0.97 - 1.25	2.78 - 3.56[c]
Monel® K-500	Inconel® 625	0.93 - 2.00	2.67 - 5.70
17-4 PH SS	Hastelloy® C-22	0.93 - 1.00	2.65 - 2.86
Monel® K-500	304 SS	0.92 - 1.13[d]	2.63 - 3.24
Inconel® 718	304 SS	0.90 - 1.18[d]	2.58 - 3.37
17-4 PH SS	Hastelloy® C-276	0.89 - 1.10	2.55 - 3.14
Bronze	17-4 PH (H 1150 M)	0.89 - 1.02	2.55 - 2.90[c]
316 SS	303 SS	0.89 - 0.90[d]	2.53 - 2.57
Inconel® 718	316 SS	0.86 - 0.96[d]	2.44 - 2.73
Monel® 400	304 SS	0.85 - 0.94[d]	2.43 - 2.69
17-4 PH SS	Hastelloy® G-30	0.84 - 1.02	2.41 - 2.90
Monel® K-500	303 SS	0.84 - 1.00[d]	2.41 - 2.88
Ductile cast iron	Stellite® 6	0.84 - 1.16	2.39 - 3.32[c]
Cu Zr	316 SS	0.83 - 0.90	2.39 - 2.58
Ductile cast iron	Tin bronze	0.81 - 1.69	2.32 - 4.82[c]

[a] -2.5 cm (1 in.) diameter x 0.25 cm (0.1 in.) wall x 2 cm (0.8 in.) specimens rotated axially, horizontally in stagnant 6.9 MPa (1000 psia), aviator's breathing grade oxygen. Tests were conducted by keeping v constant at 22.4 m/s (73.5 ft/s) and increasing P at a rate of 35 N/s until ignition.

[b] All unreferenced data are from previously unpublished frictional heating tests performed at NASA White Sands Test Facility.

[c] Benz, Bishop, and Pedley (1989)

[d] Bryan, Stoltzfus, and Gunaji (1991)

Table B-3
Friction Ignition Test Data for Dissimilar Pairs (continued)[a,b]

Test Materials		*Pv* Product at Ignition	
Stator	Rotor	$W/m^2 \times 10^{-8}$	$(lbf/in^2 \times ft/min \times 10^{-6})$
Monel® K-500	17-4 PH SS	0.80 - 1.00[d]	2.27 - 2.39
Bronze	410 SS	0.79 - 1.20	2.25 - 3.60[c]
304 SS	303 SS	0.77 - 0.79[d]	2.21 - 2.26
Tin bronze	Aluminum bronze	0.77 - 0.84	2.20 - 2.38[b]
316 SS	17-4 PH SS	0.77 - 0.85[d]	2.18 - 2.41
Monel® 400	303 SS	0.76 - 0.93	2.17 - 2.67
Inconel® 718	303 SS	0.75 - 0.87[d]	2.14 - 2.48
Monel® K-500	316 SS	0.75 - 0.91[d]	2.10 - 2.61
304 SS	17-4 PH SS	0.69 - 1.09[d]	1.97 - 3.11
316 SS	304 SS	0.68 - 0.91[d]	1.93 - 2.60
Stellite® 6	Nitronic 60	0.66 - 0.77	1.90 - 2.18[b]
Monel® 400	17-4 PH SS	0.66 - 1.53[d]	1.89 - 4.38
303 SS	17-4 PH SS	0.65 - 0.88	1.86 - 2.51
17-4 PH SS	Inconel® 625	0.64 - 1.09	1.83 - 3.11
304 SS	Cu Be	0.63 - 1.24	1.81 - 3.54
Monel® 400	316 SS	0.62 - 0.91[d]	1.75 - 2.59
Ductile Cast iron	Nitronic 60	0.44 - 0.75	1.25 - 2.15[b]
Aluminum bronze	C355 Aluminum	0.30 - 0.32	0.85 - 0.91[b]
Nitronic 60	17-4 PH (H 1150 M)	0.28 - 0.61	0.80 - 1.75[b]
Babbitt on bronze	17-4 PH (H 1150 M)	0.09 - 0.21	0.25 - 0.60[b]
Babbitt on bronze	Monel® K-500	0.09 - 0.19	0.25 - 0.55[b]
Babbitt on bronze	410 SS	0.08 - 0.09	0.24 - 0.27[b]

[a] -2.5 cm (1 in.) diameter x 0.25 cm (0.1 in.) wall x 2 cm (0.8 in.) specimens rotated axially, horizontally in stagnant 6.9 MPa (1000 psia), aviator's breathing grade oxygen. Tests were conducted by keeping v constant at 22.4 m/s (73.5 ft/s) and increasing P at a rate of 35 N/s until ignition.

[b] All unreferenced data are from previously unpublished frictional heating tests performed at NASA White Sands Test Facility.

[c] Benz, Bishop, and Pedley (1989)

[d] Bryan, Stoltzfus, and Gunaji (1991)

Table B-4
Heat of Combustion of Metals and Alloys

Material	ΔH_c cal/g[a]	Source
Beryllium (BeO)	15865	JANNAF (1971)
Aluminum (Al_2O_3)	7425	JANNAF (1971)
Magnesium (MgO_2)	5900	JANNAF (1971)
Titanium (TiO_2)	4710	JANNAF (1971)
Chromium (Cr_2O_3)	2600	Smithells (1976)
Ferritic and Martensitic Steels	1900-2000	Calculated
Austenitic Stainless Steels	1850-1900	Calculated
Precipitation Hardening Stainless Steels	1850-1950	Calculated
Carbon steels	1765-1800	Calculated
Iron (Fe_2O_3)	1765	JANNAF (1971)
Inconel® 600	1300	Calculated
Aluminum bronzes	1100-1400	Calculated
Zinc (ZnO)	1270	Smithells (1976)
Tin (SnO_2)	1170	Smithells (1976)
Nickel (NiO)	980	Smithells (1976)
Monel® 400	870	Calculated
Yellow brass, 60 Cu/40 Zn	825	Calculated
Cartridge brass, 70 Cu/30 Zn	790	Calculated
Red brass, 85 Cu/15 Zn	690	Calculated
Bronze, 10 Sn/2 Zn	655	Calculated
Copper (CuO)	585	JANNAF (1971)
Lead (PbO)	250	Smithells (1976)
Silver (Ag_2O)	35	Smithells (1976)

Table B-5
Minimum Oxygen Pressure Required to Support Self-Sustained Combustion of Approximately 15-cm (6-in.) long, 0.32-cm (0.125-in.)-Diameter Rods Ignited at the Bottom

Material	Threshold Pressure		Next Lower Pressure Tested (psia)
	(MPa)	(psia)	
Commercially pure Ag	>[a]68.9	>[a]10 000	
Monel® K-500	>[a]68.9	>[a]10 000	
Inconel® MA754	>[a]68.9	>[a]10 000	
Monel® 400	>[a]68.9	>[a]10 000	
Brass 360 CDA	>[a]68.9	>[a]10 000	
Cu-2 Be	>[a]68.9	>[a]10 000	
Nickel 200	>[a]55.2	>[a]8 000	
Copper 102	>[a]55.2	>[a]8 000	
Red Brass	>[a]48.3	>[a]7 000	
Tin Bronze	>[a]48.3	>[a]7 000	
Yellow Brass	>[a]48.3	>[a]7 000	
Haynes® 188	34.5	5 000	3 000
Haynes® 242	34.5	5 000	3 000
Hastelloy® C22	34.5	5 000	1 000
Hastelloy® C276	20.7	3 000	1 000
Inconel® 600	20.7	2 500	1 000
Stellite® 6	20.7	2 500	1 000
Inconel® 625	20.7	2 500	1 000
440C SS	17.2	2 500	1 000
MP 35N	13.8	2 000	1 500
Elgiloy®	13.8	2 000	1 500
Udimet 700	6.9	1 000	500
Haynes® G3	6.9	1 000	500
Inconel® 718	6.9	1 000	750
Waspaloy	6.9	1 000	500
Invar® 36	≤[b]6.9	≤[b]1 000	None
304 SS	6.9	1 000	500
Colmonoy®	6.9	1 000	500
17-4 PH	6.9	1 000	500
303 SS	≤[b]6.9	≤[b]1 000	None

[a] > indicates that this was the highest pressure tested and the material did not support self-sustained combustion. The threshold pressure, if it exists, is greater than the stated value.

[b] ≤ indicates that no tests were conducted at lower pressures and therefore the threshold pressure is less than or equal to the stated value.

Table B-5
Minimum Oxygen Pressure Required to Support Self-Sustained Combustion of Approximately 15-cm (6-in.) long, 0.32-cm (0.125-in.)-Diameter Rods Ignited at the Bottom (continued)

Material	Threshold Pressure		Next Lower Pressure Tested (psia)
	(MPa)	(psia)	
321 SS	6.9	1 000	500
Commercially pure Pb	≤[b]5.2	≤[b]750	None
Commercially pure Be	4.1	600	500
316 SS	3.5	500	100
Carbon Steel A302B	≤[b]3.5	≤[b]500	None
Ductile Cast Iron	≤[b]3.5	≤[b]500	None
Nitronic 60	≤[b]3.5	≤[b]500	None
9% Nickel Steel	≤[b]3.5	≤[b]500	None
Welda-lite 049-T851	2.1	300	250
Commercially pure Sn	1.4	300	200
Al-Bronze	1.4	250	100
AMS 6278	1.4	200	100
Commercially pure Fe	≤[b]0.7	≤[b]100	None
Aluminum 1100	≤[b]0.7	≤[b]100	None
AISI 9310	0.7	100	50
Aluminum 2219	0.2	25	20
Aluminum 5058	≤[b]0.2	≤[b]35	None
Commercially pure Al	≤[b]0.17	≤[b]50	None
Commercially pure Hf	≤[b]0.17	≤[b]25	None
Zr	≤[b]0.07	≤[b]10	None
Commercially pure Ti	≤[b]0.007	≤[b]1	None
Ti-6Al-4V	≤[b]0.007	≤[b]1	None

[a] > indicates that this was the highest pressure tested and the material did not support self-sustained combustion. The threshold pressure, if it exists, is greater than the stated value.

[b] ≤ indicates that no tests were conducted at lower pressures and therefore the threshold pressure is less than or equal to the stated value.

Table B-6
Polymer Properties Related to Ignition and Combustion

Material	Autoignition Temp (°C)	Oxygen Index (OI)	Heat of Combustion (j/g)	LOX Mechanical Impact	Solubility S, cm^3/cm^3 O_2	Permeability Q, 10^{-8} cm^2 s^{-1} atm^{-1} O^2	Flame Temperature, °C[a] Pressure (psia) A-amb, B-3000, C-10000
FEP		77[b]	10467[c]	0/20 (98J)[g]		4.47	2464(A) 3439(B) 3761(C)
Polyether sulphone							3153(A) 3978(B) 4192(C)
PEEK		35[d]					3155(A) 3988(B) 4206(C)
Polyethylene Terepthatlate		22.7[e]	23825[f]	6/51 (98J)[f]		0.02	3145(A) 3970(B) 4185(C)
Polystyrene		17.8[f]	41380[f]	20/20 (98J)[g]		18.94	3130(A) 3942(B) 4152(C)
Polyacetal		14.2-16.1[f]		12/20 (98J)[g]		0.39	3013(A) 3687(B) 3841(C)
Polycarbonate		22.5 39.7[f]	30783[f]	20/20 (98J) 0/20 (19.5J)[f]		1.29	3134(A) 3948(B) 4159(C)
ABS		18.8-33.5[f]	35575[f]				
Polymethyl Methacrylate		16.7-17.7[f]	25080[f]	2/2 (98J)[f]			3008(A) 3677(B) 3830(C)
Polyphenylene Sulphide	533[e]	43[e]	28692[e]				3164(A) 3993(B) 4209(C)
PolyPhenylene Oxide		28-29[b]		20/20 (98J)[f]			3105(A) 3891(B) 4090(C)
Polysulphone		32[e]					3194(A) 4053(B) 4279(C)
Nylon 11/12						0.03	3077(A) 3827(B) 4011(C)
Nylon 6		24[e]				0.03	3072(A) 3815(B) 3997(C)
Nylon 66	339[h]	22[e]	31400[e]	3/100 (98J)[g]		0.03	3118(A) 3845(B) 3997(C)
Polypropylene	231-262[e]	17.5[f]	46050[e]	17/20 (98J)[g]			

[a]Gordon and McBride (1971) [b]Werley (1988) [c]Lowrie (1983) [d]Information supplied by manufacturer. [e]Ikeda (1983) [f]ASTM G 63 (1991)
[g]Bryan (1983) [h]Testing performed at WSTF

Table B-6
Polymer Properties Related to Ignition and Combustion (continued)

Material	Autoignition Temp (°C)	Oxygen Index OI	Heat of Combustion (j/g)	LOX Mechanical Impact	Solubility S, cm^3/cm^3 O_2	Permeability Q, 10^{-8} cm^2 s^{-1} atm^{-1} O^2	Flame Temperature, °C[a] Pressure (psia) A-amb, B-3000, C-10000
HDPE	225[b] 485[c]	17.5[b]	46500[b]	30/80 (98J)[d] 30/80 (83J) 3/20 (9.8J)[d]		4.18	3070(A) 3814(B) 3996(C)
Pine wood			19678[e]				
Natural Rubber			39778[e]		0.112[f]	17.7[f]	3099(A) 3876(B) 4072(C)
Styrene Butadiene Rubber	160[d]				0.094[f]	13.0[f]	3132(A) 2948(B) 4156(C)
Silicone Rubber	460-473[b]	21-32[b]	12895-15440[b]			400[f]	2995(A) 3909(B) 4189(C)
Polytetrafluoro ethylene	512-527[b]	100[b]	5334[b]	0/20 (98J)[d]			2543(A) 3507(B) 2831(C)
PCTFE (Kel-F81)	384[b]	100[b]	7858-9785[b]	0/20 (98J)[d]		0.07	2487(A) 3406(B) 3705(C)
Butyl	380[g]				0.122[f]	1.0[f]	3091(A) 3860(B) 4052(C)
Ethylene Propylene		25.5[d]	38460	7/20 (98J)[h]	0.13[f]	19.0[f]	3083(A) 3842(B) 4029(C)
Chloroprene (Neoprene)	306-317[b]	32-35[b]	26737-27310[b]	16/20 (98J)[i]	0.075[f]	3.0[f]	3086(A) 3865(B) 4062(C)
Nitrile or Buna N	489[b]	22[b]	34900[b]	2/3 (98J)[d]	0.068[f]	2.9[f]	3097(A) 3867(B) 4060(C)

[a]Gordon and McBride (1971) [b]Ikeda (1983) [c]Tapphorn, Shelley, and Benz (1991) [d]ASTM G 63 (1991) [e]Lowrie (1983)
[f]Blow and Hepburn (1985) [g]Testing performed at WSTF. [h]Key (1972) [i]Bryan (1983)

Table B-6
Polymer Properties Related to Ignition and Combustion (continued)

Material	Autoignition Temp (°C)	Oxygen Index OI	Heat of Combustion (j/g)	LOX Mechanical Impact	Solubility S, cm^3/cm^3 O_2	Permeability Q, 10^{-8} cm^2 s^{-1} atm^{-1} O^2	Flame Temperature, °C[a] Pressure (psia) A-amb, B-3000, C-10000
Chlorosul-ponate		27[b]	28470[b]	4/5 (98J) 1/15 (19.5J)[c]		2.1[c]	3048(A) 3778(B) 3956(C)
Polyethylene (Hypalon)							
Polyurethane (foam)		25-28[b]	31771-27214[d]			2.4	
Fluorinated Elastomer (Viton®)	461-484[b]	56-100[b]	12912-18614[b]	3/20 (98J)[e]		1.2	2997(A) 3774(B) 4005(C)
Polyimide Vespel®	562[b]	49	26109[b]	0/20 (98J)[f]			3147(A) 3965(B) 4179(C)
SP21		65[e]	25522[e]	0/20 (98J)[g]			
Vespel® SP21			6071[d]	0/20 (98J)[g]			
Rulon A reinforced PTFE	427[e]		5338[d]				
Rulon LD reinforced PTFE			7118[d]	0/120 (98J)[g]			
Fluorogold reinforced PTFE			10048[d]	0/20 (98J)[f]			
Fluorogreen® E600							

[a]Gordon and McBride (1971) [b]Ikeda (1983) [c]Blow and Hepburn (1985) [d]Lowrie (1983) [e]ASTM G 63 (1991) [f]Key (1966)
[g]Bryan (1983)

Table B-6
Polymer Properties Related to Ignition and Combustion (continued)

Material	Autoignition Temp (°C)	Oxygen Index (OI)	Heat of Combustion (j/g)	LOX Mechanical Impact	Solubility S, cm^3/cm^3 O_2	Permeability Q, 10^{-8} cm^2 s^{-1} atm^{-1} O^2	Flame Temperature, °C[a] Pressure (psia) A-amb, B-3000, C-10000
Kalrez® Perfluoro-elastomer	429[b]	100[b]	6552[b]				2543(A) 3506(B) 3831(C)
Polyvinyli-dene chloride		60[c]	20900[d]			0.004	2908(A) 3549(b) 3707(C)
Polyvinyl chloride	402[b]	37[b]	20885[b]	2/2 (98J) 0/20 (9.8J)		0.09	3048(A) 3798(B) 3987(C)
Carbon Black		35[b]	32750[b]				
Krytox® 240AC Fluorinated lubricant	427[d]	> 100[c]	3768-4187[e]	0/200 (98J)[f]			2428(A) 3389(B) 3702(C)
Torlon® Polyamide imide (AMOCO)		42					
Fomblin LC Fluorinate Lubricant (AUSI-MONT)	427[d]	> 100[c]					2434(A) 3370(B) 3674(C)
Halar ECTFE			16329[e]				3215(A) 4032(B) 4239(C)
ETFE Tefzel (DuPont®)		30[d]					3314(A) 4178(B) 4400(C)
PVdF Kynar®		43.7[d]	13710[d]	79/100 (98J)[d]			

[a]Gordon and McBride (1971) [b]Ikeda (1983) [c]Fenimore and Martin (1966) [d]ASTM G 63 (1991) [e]Lowrie (1983)
[f]Bryan (1983)

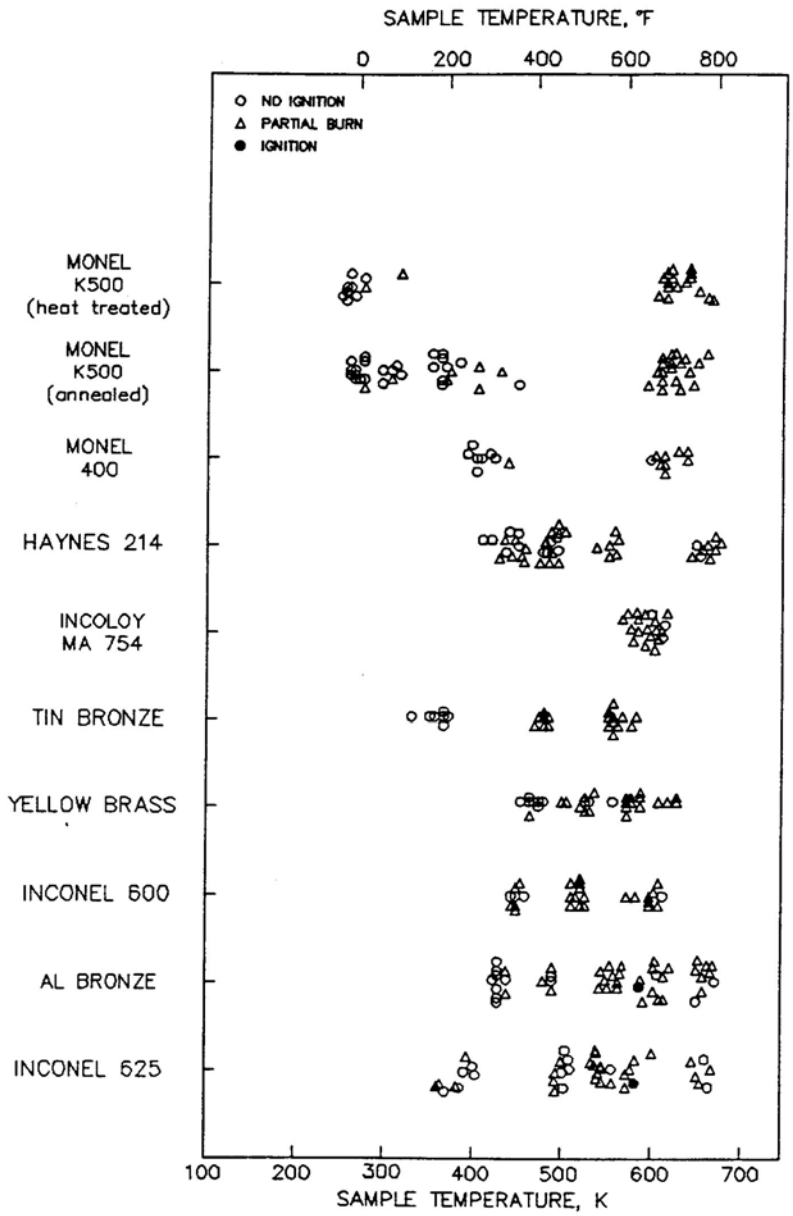

Figure B-1a
Ignitability of Metals in Supersonic Particle Impact Test with 2000-μ Aluminum Particles in 3900-psi Oxygen (Increases from Top Right to Bottom Left)

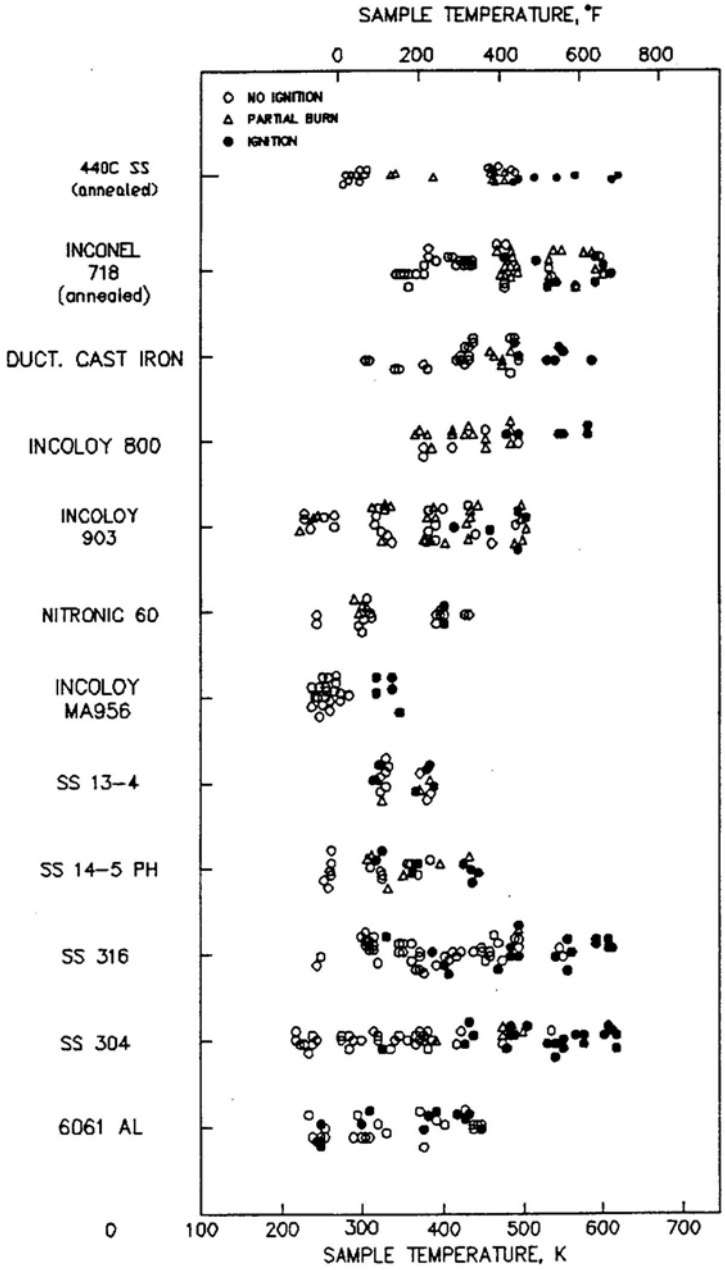

Figure B-1b
Ignitability of Metals in Supersonic Particle Impact Test with 2000-μ Aluminum Particles in 3900-psi Oxygen (Increases from Top Right to Bottom Left)

B.7 References

ASTM D 2015. *Standard Test Method for Gross Calorific Value of Solid Fuel by the Adiabatic Bomb Calorimeter.* 1991 Annual Book of ASTM Standards, Sect. 5, Vol. 05.05, American Society for Testing and Materials, Philadelphia, PA (1991, or latest revision): pp. 266-273.

ASTM D 2382. *Standard Test Method for Heat of Combustion of Hydrocarbon Fuels by Bomb Calorimeter (High-Pressure Method).* 1991 Annual Book of ASTM Standards, Sect. 5, Vol. 05.02, American Society for Testing and Materials, Philadelphia, PA (1991, or latest revision): pp: 140-148.

ASTM D 2512. *Standard Test Method for Compatibility of Materials with Liquid Oxygen (Impact Sensitivity Threshold and Pass-Fail Techniques*). 1991 Annual Book of ASTM Standards, Sect. 15, Vol. 15.03, American Society for Testing and Materials, Philadelphia, PA (1991, or latest revision).

ASTM D 2863. *Standard Test Method for Measuring the Minimum Oxygen Concentration to Support Candle-like Combustion of Plastics (Oxygen Index*). 1991 Annual Book of ASTM Standards, Sect. 8, Vol. 08.02, American Society for Testing and Materials, Philadelphia, PA (1991, or latest revision): pp. 420-424.

ASTM G 63. *Standard Guide for Evaluating Nonmetallic Materials for Oxygen Servic*e. 1991 Annual Book of ASTM Standards, Sect. 14, Vol. 14.02, American Society of Testing and Materials, Philadelphia, PA (1991, or latest revision): pp. 1148-1167.

ASTM G 72. *Standard Test Method for Autogenous Ignition Temperature of Liquids and Solids in a High-Pressure Oxygen-Enriched Environmen*t. 1991 Annual Book of ASTM Standards, Sect. 14, Vol. 14.02, American Society for Testing and Materials, Philadelphia, PA (1991, or latest revision): pp. 1173-1177.

ASTM G 74. *Standard Test Method for Ignition Sensitivity of Materials to Gaseous Fluid Impac*t." 1991 Annual Book of ASTM Standards, Sect. 14, Vol. 14.02, American Society for Testing and Materials, Philadelphia, PA (1991, or latest revision): pp. 1178-1184.

ASTM G 86. *Standard Test Method for Determining Ignition Sensitivity of Materials to Mechanical Impact in Pressurized Oxygen Environment*s. 1991 Annual Book of ASTM Standards, Sect. 14, Vol. 14.02, American Society for Testing and Materials, Philadelphia, PA (1991, or latest revision): pp. 1190-1200.

Benning M. A., J. S. Zabrenski, and B. L. Ngoc. "The Flammability of Aluminum Alloys and Aluminum Bronzes as Measured by Pressurized Oxygen Index." *Flammability and Sensitivity of Materials in Oxygen-Enriched Atmospheres: Third Volum*e, ASTM STP 986, D. W. Schroll, Ed., American Society for Testing and Materials, Philadelphia, PA (1988): pp. 54-71.

Benz, F. J., C. V. Bishop, and M. D. Pedley. "Overview, Data, and Procedures." *Ignition and Thermal Hazards of Selected Aerospace Fluid*s, NASA White Sands Test Facility, NM, October (1989).

Benz, F. J., and J. M. Stoltzfus. “Ignition of Metals and Alloys in Gaseous Oxygen By Frictional Heating.” *Flammability and Sensitivity of Materials in Oxygen-Enriched Atmospheres: Second Volum*e, ASTM STP 910, M. A. Benning, Ed., American Society for Testing and Materials, Philadelphia, PA (1986): pp. 38-58.

Benz, F. J., R. E. Williams, and D. Armstrong. “Ignition of Metals by High-Velocity Particles.” *Flammability and Sensitivity of Materials in Oxygen-Enriched Atmospheres: Second Volum*e, ASTM STP 910, M. A. Benning, Ed., American Society for Testing and Materials, Philadelphia, PA (1986).

Blow, C. M., and C. Hepburn. *Rubber Manufacture and Technolog*y. Second Ed., Butterworth’s, Plastics and Rubber Institute (1985).

Bryan, C. J. “NASA Mechanical Impact Testing in High-Pressure Oxygen.” *Flammability and Sensitivity of Materials in Oxygen-Enriched Atmospheres, Third Volum*e, ASTM STP 812, B. L. Werley, Ed., American Society for Testing and Materials, Philadelphia, PA (1983).

Bryan, C. J., and R. Lowry. “Comparative Results of Autogenous Ignition Temperature Measurements by ASTM G72 and Pressurized Scanning Calorimetry in Gaseous Oxygen.” *Flammability and Sensitivity of Materials in Oxygen Enriched Atmospheres: Second Volum*e, ASTM STP 910, M. A. Benning, Ed., American Society for Testing and Materials, Philadelphia, PA (1986).

Bryan, C. J., J. M. Stoltzfus, and M. V. Gunaji. “An Assessment of the Metals Flammability Hazard in the Kennedy Space Center Oxygen Systems.” *Flammability and Sensitivity of Materials in Oxygen-Enriched Atmospheres: Fifth Volum*e, ASTM STP 1111, J. M. Stoltzfus and K. McIlroy, Eds., American Society for Testing and Materials, Philadelphia, PA (1991): pp. 453-462.

Bryan, C. J., J. M. Stoltzfus, and M. V. Gunaji. “An Assessment of the Flammability Hazard of Several Corrosion Resistant Metal Alloys.” *Flammability and Sensitivity of Materials in Oxygen-Enriched Atmospheres: Sixth Volum*e, ASTM STP 1197, D. Janoff and J. M. Stoltzfus, Eds., American Society for Testing and Materials, Philadelphia, PA (1993): pp. 112-118.

Fenimore, C. P., and F. J. Martin. *Modern Plastic*s. Vol. 44, No. 3, November (1966): pp. 141-148.

Gordon, S., and B. J. McBride. *Computer Program for Calculation of Complex Chemical Equilibrium Compositions, Rocket Performance, Incident and Reflected Shocks, and Chapman-Jouguet Detonation*s. NASA SP-273, NASA (1971)

Ikeda, G. K. “Oxygen Index Tests to Evaluate the Suitability of a Given Material for Oxygen Service.” *Flammability and Sensitivity of Materials in Oxygen Enriched Atmospheres:First Volum*e, ASTM STP 812, B. L. Werley, Ed., American Society for Testing and Materials, Philadelphia, PA (1983).

JANNAF. *Thermochemical Table*s. Second Ed., NSRDS-NBS 37, National Bureau of Standards, Washington, DC (1971, or latest revision).

Janoff, D., L. J. Bamford, B. E. Newton, and C. J. Bryan. “Ignition of PTFE-Lined Flexible Hoses by Rapid Pressurization with Oxygen.” *Symposium on Flammability and Sensitivity of Materials in Oxygen-Enriched Atmospheres: Fourth Volum*e, ASTM STP 1040, J. M. Stoltzfus, F.

J. Benz, and J. S. Stradling, Eds., American Society for Testing and Materials, Philadelphia, PA (1989).

Key, C. F. *Compatibility of Materials with Liquid Oxyge*n. NASA Technical Memorandum, NASA TM X-64711, Vol. 1, NASA Marshall Space Flight Center, AL (1972): pp. I.5.

Key, C. F. *Compatibility of Materials with Liquid Oxygen, I*I. NASA Technical Memorandum, NASA TM X-53533, NASA Marshall Space Flight Center, AL (1966).

Key, C. F., and W. A. Riehl. *Compatibility of Materials with Liquid Oxyge*n. NASA Technical Memorandum, NASA TM X-985, NASA Marshall Space Flight Center, AL (1964).

Lockhart, B. J., M. D. Hampton, and C. J. Bryan. "The Oxygen Sensitivity/Compatibility of Several Materials by Different Test Methods." *Flammability and Sensitivity of Materials in Oxygen Enriched Atmospheres, Fourth Volum*e, ASTM STP 1040, J. M. Stoltzfus, F. J. Benz, and J. S. Stradling, Eds., American Society for Testing and Materials, Philadelphia, PA (1989).

Lowrie, R. "Heat of Combustion and Oxygen Compatibility." *Flammability and Sensitivity of Materials in Oxygen Enriched Atmospheres: First Volum*e, ASTM STP 812, B. L. Werley, Ed., American Society for Testing and Materials, Philadelphia, PA (1983).

Moffett, G. E., M. D. Pedley, N. Schmidt, R. E. Williams, D. B Hirsch, and F. J. Benz. "Ignition of Nonmetallic Materials by Impact of High-Pressure Gaseous Oxygen." *Flammability and Sensitivity of Materials in Oxygen-Enriched Atmospheres, Third Volum*e, ASTM STP 986, D. W. Schroll, Ed., American Society for Testing and Materials, Philadelphia, PA (1988).

NHB 8060.1. *Flammability, Odor, Offgassing, and Compatibility Requirements and Test Procedures for Materials in Environments That Support Combustio*n. NASA Office of Safety and Mission Quality.

Ordin, P. M. *Research on Ignition and Combustion in Oxygen System*s. NASA Technical Memorandum, NASA TM X-68223, NASA (1973).

Phillips, B. R. *Resonance Tube Ignition of Metal*s. Ph. D Dissertation, University of Toledo, OH (1975).

Reynolds W. C. *Investigation of Ignition Temperature of Solid*s. NASA TN D-182, NASA, Washington DC (1959).

Shelley, R. M. *Ignition of Inconel ® 718 by Buna N Contamination*. WSTF Investigative Report, WSTF-IR-91-005, NASA White Sands Test Facility Laboratories Office, NM (1991).

Smithells, C. *J. Metals Reference Boo*k. Fifth Ed., Butterworth's, London, England (1976): pp. 206-208.

Steinthal, M. W. *Nonmetallic Materials Design Guidelines and Test Data Handboo*k. JSC-02681, Rev. J, NASA Johnson Space Center, TX (1982).

Stoltzfus, J. M., F. J. Benz, and J. M. Homa. - ."The Pv Product required for the Frictional Ignition of Alloys." *Flammability and Sensitivity of Materials in Oxygen-Enriched Atmospheres,*

*Fourth Volum*e, ASTM STP 1040, J. M. Stoltzfus, F. J. Benz, and J. S. Stradling, Eds., American Society for Testing and Materials, Philadelphia, PA,(1989).

Stoltzfus, J. M., J. M. Homa, R. E. Williams, and F. J. Benz. “ASTM Committee G-4 Metals Flammability Test Program: Data and Discussion.” *Flammability and Sensitivity of Materials in Oxygen-Enriched Atmospheres: Third Volum*e, ASTM 986, D. W. Schroll, Ed., American Society for Testing and Materials, Philadelphia, PA (1988): pp. 28-53.

Stoltzfus, J., and F. J. Benz. *Development of Methods and Procedures for Determining the Ignitability of Metals in Oxyge*n. TR-281-00l-INT-1, NASA White Sands Test Facility, NM (1984).

Stoltzfus, J. M., R. Lowrie, and M. V. Gunaji. “Burn Propagation Behavior of Wire Mesh Made from Several Alloys.” *Flammability and Sensitivity of Materials in Oxygen-Enriched Atmosphere: Fifth Volum*e, ASTM STP 1111, J. M. Stoltzfus and K. McIlroy, Eds., American Society for Testing and Materials, Philadelphia, PA (1991).

Tapphorn, R. M., R. M. Shelley, and F. J. Benz. “Test Developments for Polymers in Oxygen-Enriched Environments.” *Flammability and Sensitivity of Materials in Oxygen-Enriched Atmospheres: Fifth Volume,* ASTM STP 1111, J. M. Stoltzfus and K. McIlroy, Eds., American Society for Testing and Materials, Philadelphia, PA (1991).

Werley, B. L. “An Oxygen Index Update.” *Flammability and Sensitivity of Materials in Oxygen-Enriched Atmospheres: Third Volum*e, ASTM STP 986, D. W. Schroll, Ed., American Society for Testing and Materials, Philadelphia, PA (1988).

Williams, R. E., F. J. Benz, and K. McIlroy. “Ignition of Steel Alloys by Impact of Low-Velocity Iron/Inert Particles in Gaseous Oxygen.” *Flammability and Sensitivity of Materials in Oxygen-Enriched Atmospheres: Third Volum*e, ASTM STS 986, D. W. Schroll, Ed., American Society for Testing and Materials, Philadelphia, PA (1988): pp. 72-84.

APPENDIX C

DESIGN EXAMPLES

C.1 This appendix expands on the concepts presented in paragraph 7, which designers must adhere to when designing oxygen systems and components. The examples detailed below will aid the designer in combining the use of the various design techniques to design simple, reliable, ignition-resistant equipment. Refer to ASTM G 88 (1985) for additional design guidelines.

C.2 Sample Material Applications. Refer to paragraph 6, ASTM G 63 (1985), and ASTM G 94 (1990) for information on materials ignition and combustion. The following information provides guidelines for the designer, but it is not intended to supersede specific data found in Appendix B. The materials identified in the following sections are roughly in descending order of resistance to ignition and combustion in oxygen. Components fabricated from Monel® without thin cross sections are generally safe from ignition mechanisms. Ignition sources must be avoided when using materials known to be flammable in the use environment.

C.2.1 Metals.

a. Monel® 400 is useful as an engineering alloy with high ignition resistance in oxygen. It has particular advantages for welding applications, such as in pressure vessels and piping. It is also good for assembly housings where weight is not a design constraint and where environmental corrosion, such as might occur by a seashore, may preclude such metals as aluminum.

b. Monel® K-500 is useful for high strength-to-weight ratios (specific strengths). Monel® K-500 is more expensive than Monel® 400, but it also has improved physical properties that make it a good choice. This material is excellent where relatively high hardness is required, such as bearing load retention and improved galling resistance. Another good application for Monel® K-500 is on valve and piston shafts.

Note: Monel® K-500 should not be welded for most applications.

c. Bronze has been shown to be an excellent material for sintered filter elements.[1] It may also be used for valve bodies and other components where material strength is not a prime design criterion.

d. Beryllium-copper may be used for springs and other applications where high strength and the ignition resistance of copper-based alloys is desired. Inconel® X-750 may be used for high-strength springs, Inconel® 600 for low-strength springs, and MP-35N and Elgiloy® for very high-strength springs and high spring rates. Ignition resistance and high-temperature properties of these materials vary.

e. Inconel® 625 is useful for very high-temperature applications where welded materials are required. In essence, it may be used as a high-temperature

[1] Recent tests on ignitability of filter materials at WSTF.

replacement for Monel® 400, keeping in mind that material strength is reduced and flammability and ignition susceptibility is increased.

f. Hastelloy® C-22 and C-276 are Ni-Cr-Mo alloys that can withstand high-temperature oxidizing environments up to 1090°C (2000°F). They are also resistant to mineral acids, solvents, wet and dry chlorine, or hydroflouric acids. However, in high-pressure oxygen environments these alloys have flammable traits similar to Inconel® 625. C-22 alloy, however, is known to be markedly less flammable than C-276. Both of these alloys are available in cast, wrought, and forged configurations.

g. 300 series stainless steel is a very common material for valves, tubing, vessels, and fittings. If used in situations where the ignition mechanisms are minimized or eliminated, it provides an effective and relatively low-cost material choice.

h. Inconel® 718 is useful for very high-temperature applications where high specific strengths are required and welding is permitted. Because it can be heat-treated to enhance mechanical properties, Inconel® 718 may replace Inconel® 625; however, flammability and ignition susceptibility is increased.

i. Galling potential increases with materials of similar chemical composition and hardnesses. If an all-Monel® valve is required, then screw threads should have one mating part made of annealed Monel® 400 and the other of age-hardened Monel® K-500 to achieve a large difference in hardnesses and some difference in chemical composition. Using an annealed 300 series stainless steel mated with age-hardened Monel® K-500 would further reduce galling potential because of the increased disparity in chemical compositions.

j. Aluminum alloys are highly susceptible to ignition and combustion in oxygen, but because of their lightweight, designers are tempted to use aluminum in spite of the ignition hazards. An anodizing surface preparation should be used for aluminum parts subject to conditions that may generate particulate or be subjected to particle impacts (Bahk et al. 1992). Examples include bends or restrictions in aluminum flow lines, valve bodies, and piston housings.

C.2.2 Polymers. In general, all polymers are flammable in 100-percent oxygen; therefore, care must be taken to minimize or eliminate ignition sources. The materials listed below appear roughly in descending order of preference.

a. Teflon® is the most compatible soft good in terms of ignition resistance in oxygen-enriched environments. For this reason, it is preferred for a wide variety of seals and miscellaneous components. Teflon® does not have any appreciable resilience, which is a very desirable property for seal materials. Because of this, the designer must ensure that “cold flow” of Teflon® can be tolerated for long-term mechanical loading, pressure-induced loading, and thermal cycling. Additionally, the designer must avoid situations where extrusion creates fine Teflon® particles that can promote combustion of other components. The designer must also avoid seal leakage that could create an oxygen-enriched environment around pressurized components and/or high-velocity flow, which could create particle impact ignition hazards. Teflon® may also be used as a solid lubricant coating on rubbing surfaces, but it will create contamination as the equipment is operated. Designers should be aware that fillers may adversely affect ignition and combustion effects of Teflon®.

b. Kalrez®/Chemraz® may replace Viton® or silicone when applications call for an elastomer at lower and/or higher operating temperatures than Viton®.

c. Kel-F® is a fluorinated material that may sometimes be substituted for Teflon® because of its increased rigidity and a slight resiliency. However, Vespel® is usually preferred over Kel-F® in applications where material strength is important.

d. Viton® is the most recommended elastomer for oxygen usage. Unlike Teflon®, it has “shape memory,” which allows it to withstand various loads and still return to its original shape. Because of this property, Viton® may be preferred over Teflon® for certain applications, even though it has reduced ignition resistance.

e. Vespels® , especially Vespel® SP-21, are excellent choices for bearings, bushings, valve seats, and seals. These materials have good ignition resistance, lubricity, machinability, and creep resistance.

f. Silicone is a common material for seals and diaphragms when ductility and low hardness are required to provide excellent sealing ability at low operating temperatures (not cryogenic) and moderate pressures. However, silicone is not a material of choice for oxygen service because of its low ignition threshold in oxygen-enriched environments and its high heat of combustion. Therefore, if silicone is used, the designer must ensure that all ignition sources are eliminated. Fluorosilicone is not recommended in place of standard silicone, because the mechanical properties are not enhanced, ignition/flammability characteristics are similar to silicone, and possible health risks from combustion byproducts are increased.

g. Adhesives and bonding agents should be avoided because of their high reactivity with oxygen.

C.2.3 Composites. Polymeric composites may have increased mechanical or physical properties over standard materials. A simple example of this is glass fiber-filled Teflon®. The enhanced properties are desirable, but the disadvantage is that the matrix material and often the sizings are more flammable in oxygen. When attempting to use any composites, complete ignition sensitivity testing must be performed.

C.2.4 Ceramics and Glass.

a. Ceramics are not generally flammable in oxygen, so they can serve as effective thermal and electrical insulators. However, although they may not burn, they may be severely degraded by contact with molten metal slag, and their ability to act as a fire stop or an insulator may be compromised. Care should also be taken in their use, because they are typically brittle and susceptible to fracture from manufacturing-induced defects and impact loading. High safety factors and compressive loading are design requirements.

b. Glasses may be used for many applications including pressure vessel windows and valve seals. Pressure vessel codes generally require glass-retaining pressure differentials to have safety factors of ten or greater. Special design features must also be incorporated per ASME (1987). Sapphire glass is often used for windows as well as for valve ball seals where they mate against seats.

C.3 General Design Requirements. The key to successful designs is to integrate the concepts presented in paragraph 7. Several potential hazards can be reduced or eliminated by judicious design. Additionally, it is wise to spend time at the initial design stage to simplify designs. By simplifying, potential failure points and ignition sources can be eliminated, parts can

often be made sturdier and more ignition-resistant, and flow paths can be made straighter. The following gives some examples of how to apply the concepts in paragraph 7 to real systems to avoid specific problems.

C.3.1 Particle Impact. An ideal design to eliminate particle impact ignition sources would limit fluid velocities, minimize contamination, reduce the potential for particle impacts on blunt surfaces, and avoid burrs and small parts susceptible to kindling chain ignition and combustion. In a best-case example, flow would approximate clean, low-velocity flow through a straight section of tubing. A worst-case example of how not to design for particle impact ignitions may be found in Figure C-1, which illustrates several design problems.

a. The blunt drill point at the end of the horizontal hole could provide a place for impact to occur, thus resulting in ignition of metallic particles entrapped in the flow stream. The drill point is located immediately downstream from the maximum (near sonic) fluid velocity.

b. The drill point allows particles to concentrate at the ignition site, thereby increasing the chance of ignition.

c. The sharp edge at the intersection of the drilled holes provides a site for ignited particles to promote combustion, which could in turn promote the combustion of the bulkier portion of the housing.

C.3.2 Pneumatic Impact. Soft goods must be protected from ignition sources, because they are more easily ignited than metals. An ideal example of a design to eliminate pneumatic impact ignitions would limit pressurization through the use of “slow” actuators or flow restricters. It would avoid manifold designs that allow fluid hammer situations to occur during flow transient situations. Additionally, any small, drilled holes or crevices that are difficult to clean can accumulate nonmetallic contaminants, which can be easily ignited from compressive heating or resonant fluid vibrations. Similarly, soft goods exposed to these heat sources can also be ignited, so all O-rings, seals, and valve seats must be protected from the fluid flow by metallic parts wherever practical. Figure C-2 illustrates soft goods that are minimized and protected from the flow by metallic parts. As shown, there is a tortuous flow path which reduces the pressurization rate and compressive heating of the seals.

C.3.3 Mechanical Impact. Any situation where mechanical components can impact against each other should be avoided. Examples of situations where this can occur are relief valves, shut-off valves, and regulators. Spring-loaded seats in these devices react against fluid pressures, and, during transient flow situations, the seal and seat can impact against each other caused by the imposed force imbalances. Refer to Figure C-3, which demonstrates a place where mechanical impact could occur.

C.3.4 Frictional Heating. Rotational or translational sliding contact between two parts has the potential to generate enough heat to ignite parts at the interface. Common configurations where this situation can occur is with bearings and pistons. Any contamination, such as lubrication or particulate generated by seal wear, near the heated region can also be ignited. Frictional heating hazards can be reduced by careful control of surface finishes, coefficients of friction, alignment, and flow-induced cooling. Rubbing of metallic parts should be avoided unless the design has been carefully analyzed. Frictional heating has also been found to ignite materials in cryogenic applications. The frictional heat can vaporize the LOX and form a vapor-rich fluid surrounding the heat source. Once this occurs, the ignition and combustion situation resembles

that of a GOX situation. The force imbalances across the valve seat configuration shown in Figure C-2 could create friction when closing the valve stem.

C.3.5 Electrical Arcing. Electrical arcs in oxygen-enriched environments can lead to heating and subsequent ignition. An example of good design practice is found in Figure C-4, which demonstrates the proper method to insulate electrical components and reduce the possibility of arcing. Arcing can rapidly heat wire insulation, creating fuel and heating in the presence of oxygen and causing ignition.

C.3.6 Eliminate Burrs and Sharp Edges. Although the elimination of burrs and sharp edges should be the goal of all designers and machine shops, this becomes especially important in oxygen systems where small, thin portions of metal can become the site for kindling chain combustion. If an ignition source such as particle impact is able to ignite a burr, this may promote the combustion of the bulkier material surrounding it, which would otherwise have been substantially more difficult to ignite (Figure C-5).

C.3.7 Minimmize Use-Generated Particulate. Threaded connections can generate contaminants in oxygen systems as they are engaged and tightened (Figure C-6a). This problem can be eliminated by redesigning the threaded members so the smooth portion of the plug interfaces with the seal before the threads engage (Figure C-6b). However, this solution involves rotating a part against its seal and may cause seal damage. Alternatively, the in-line threaded connection can be replaced with a flanged and bolted connection in which the threaded portions are outside the fluid stream (Figure C-6c). The function of the threaded connection can also be performed by a separate locking nut and sealing plug; the locking nut is inserted after the sealing plug has been pushed into the seal (Figure C-6d). A fifth option is to install a barrier ring to block the particulate (Figure C-6e).

C.3.8 Avoid Rotating Valve Stems. A manual, screw-type valve with a rotating stem (Figure C-7a) might seem desirable in a high-pressure oxygen system because such a valve can provide a slow actuation rate. However, a rotating-stem valve presents contamination problems. A nonmetallic seat can easily be damaged by excessive closing torque, shredding, or gas erosion during opening and closing. Furthermore, solid contaminants can become embedded in soft seat material. If the seat is made of metal, it must be hardened to prevent galling when the valve stem rotates against the seat. Such hardened materials can fracture or even fragment as a result of excessive closing torque or closure onto hard contaminants such as silica. A manual valve with a nonrotating stem (Figure C-7b) and a metallic seat can be used to achieve the desired slow actuation rate. In this case, the metal seat can be made of a much softer material and the seat can be formed by “coining” (pressure molding by the stem itself to create a perfect match). Contaminants will not cause fragmentation of such a seat. Galling cannot occur unless the nonrotating feature is compromised (therefore, care should be exercised when cleaning). The seat and body of such a valve can be fabricated from many metals that are comparatively unreactive with oxygen.

C.3.9 Eliminate Blind Passages and Crevices. A stagnant area at the end of a drilled passage tends to collect debris either from manufacture or from normal use. During rapid pressurization of GOX and its attendant compression heating, the debris becomes fuel for ignition. When an underexpanded jet impinges on (or flows across) a stagnant cavity, a periodic pressure wave may be formed that oscillates in the cavity, heating the gas within it (cavity resonance). If particles are present in regions of rapid gas flow, they can impact the end of the passage and cause ignition of the component; drill points can collect particulate at their center and significantly increase the chance of ignition. Blind passages and dead-end cavities also increase cleaning

difficulty, requiring that the part be turned during soaking to eliminate air pockets. Special nozzles or extensions must be used to flush such areas. Figure C-8a depicts a blind passage created by plugging a drilled passage. Figure C-8b depicts a dead-end cavity created by overdrilling an intersecting passage. GOX components should be designed so that a jet will not impinge on or flow across a stagnant cavity. Jets should be gradually expanded and stagnant cavities should be eliminated or kept as shallow as possible. In Figure C-8a, the blind passage could be eliminated by making the counterbore for the plug much deeper and installing the plug closer to the regulator stem. The cavity may not be completely eliminated, but the total dead volume would be significantly reduced. The cavity shown in Figure C-8b can be eliminated by paying careful attention to dimensions and tolerances or, preferably, by redesigning to eliminate the intersecting holes. If particle impact ignition is a concern, the drill point should be eliminated as part of the redesign. Inspection with a borescope can be conducted to verify that passageway lengths are within tolerance.

C.3.10 Prevent Rotation of Seals and Rotation Against Seats. Sealed parts that require rotation at assembly (such as O-rings on threaded shafts) can generate particles which may migrate into the flow stream (Figure C-9a). Particulate generation also occurs in ball valves where a ball is rotated on a nonmetallic seat. A related phenomenon, which may be described as "feathering," occurs when valve stems are rotated against some nonmetallic seats such as Kel-F®. Because of the mechanical properties of some nonmetallic materials, a thin, feather-like projection of material is extruded from the seat. The feathered feature is more ignitable than the seat itself. Instead of rotating, the sealed part can be designed as a push-in plug locked in place by a second part that is threaded but not sealed, as shown in Figure C-9b. Alternately, the sealed threads can be replaced with a flanged and bolted connection. Kel-F® and other nonmetallic materials subject to feathering should not be used for seals and seats in rotating configurations. Ball valves are not recommended for oxygen systems because of their tendency to generate particulate and their quick opening times. The quick opening times lead to rapid pressurization of downstream cavities, creating rapid heating of soft goods and increasing the risk of polymer ignition and combustion.

C.3.11 Eliminate Thin Walls. The walls between inner cavities or passageways and the outer surface of component housings may become so thin that stress concentrations result when pressure is introduced. Because geometries both inside and outside can be complex, it may not be obvious from drawings or even from direct inspection that such thin, highly stressed areas exist. If such walls become too thin, they may rupture under pressure loading. The energy released by the rupture can raise the temperature in the rupture zone. The failed section can expose bare, jagged metal that can oxidize rapidly and may heat enough to ignite and burn. Figure C-10 illustrates a thin-wall condition. The thin wall in Figure C-10 is primarily the result of an overdrill caused by careless design or an overtolerance. The dimensions of a drilled intersection should be planned more carefully or the tolerances set more tightly. It may even be possible to eliminate the intersection altogether (the most desirable solution) as shown in Figure C-6b or C-6c, although analysis must still be performed to ensure that all sharp edges and thin walls are avoided. All intersections should be examined by X-ray or borescope to ensure that the drilling was acceptable. A solution to this problem is to perform dimensional tolerance studies and to create CAD models of the component in question. An indication of thin walls should prompt a stress analysis of the local area to determine whether a problem actually exists. Dimensions and tolerances called out on the manufacturing drawing should then be tight enough to preclude stress concentrations.

C.3.12 Cold Flow and Extrusion of Seals. This effect can often be minimized by using springs to provide an external shape memory for the seal, by reinforcing the materials with various

types of fibers, and by supporting the seals with stiff back-up rings. Seal extrusion can be avoided by minimizing pressure and thermal reversal cycles.

C.4 Risk Optimization. In real design situations, the designer will often face risk optimization. Many times, task constraints dictate the use of specific materials, hardware, or features. When these features introduce new ignition hazards, the hazards must remain minimal. Often, the designer will be able to minimize risks by adding filters, reducing pressurization rates, or ensuring that the best (and possibly more expensive) materials are incorporated into the design. It is beyond the scope of this document to describe all possible compromises for risk optimization; the designer must assess each situation separately.

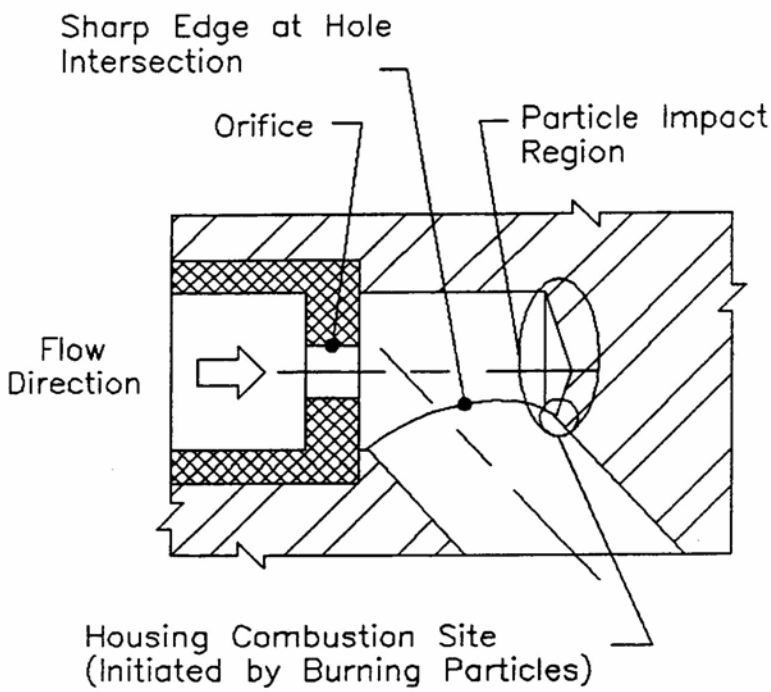

Figure C-1
Design Highly Susceptible to Particle Impact Ignition

Particles entrained in the flow stream are accelerated through the orifice and impact a blunt surface downstream. On impact, the particles are at near-sonic velocity and the kinetic energy is efficiently converted to heat. The drill point exaggerates the problem by concentrating the heat from multiple burning particles, and the sharp edge from the intersection of drilled holes allows kindling chain promoted combustion.

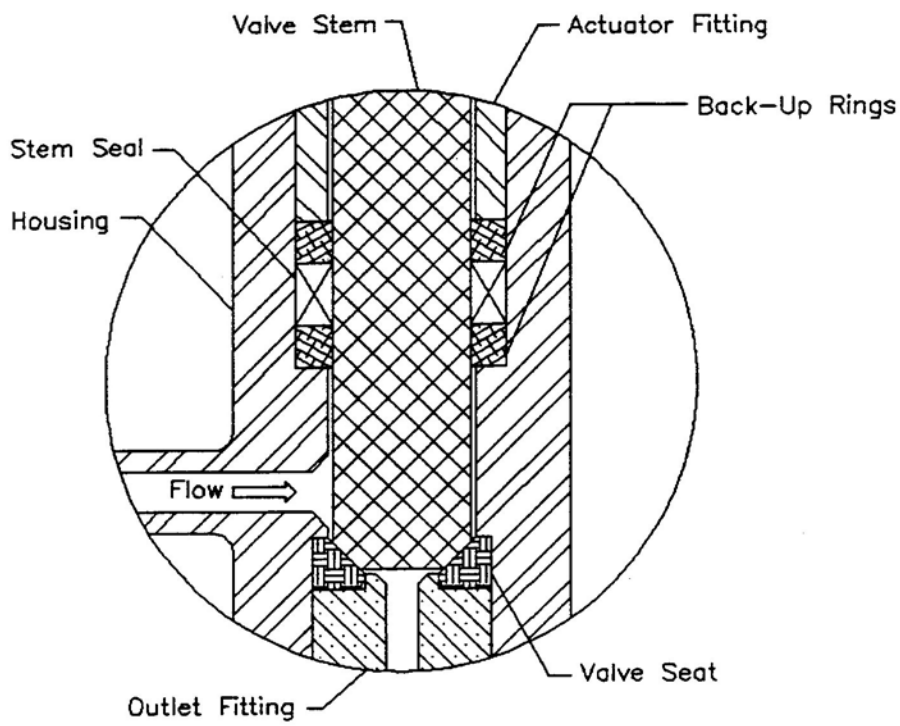

Figure C-2
Design Showing Minimization of Soft Good Exposure to Pneumatic Impact Ignition

This configuration shows the soft goods removed from the region of maximum pneumatic impact heating where the fluid momentum is stopped. All soft goods have restricted flow paths from this region, greatly reducing fluid heating of soft goods.

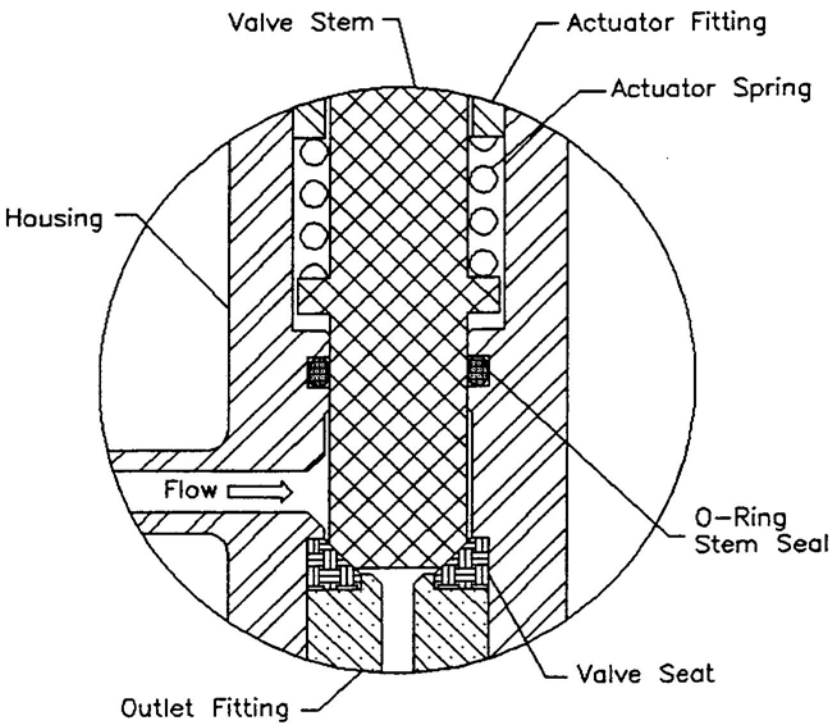

Figure C-3
Design Susceptible to Mechanical Impact Ignition

Spring-loaded valve seals can be exposed to transient flow conditions that cause rapid valve stem throttling as fluid dynamic pressures and mechanical forces vary. Valve stem throttling can, through single or multiple impacts, provide sufficient heating for ignition.

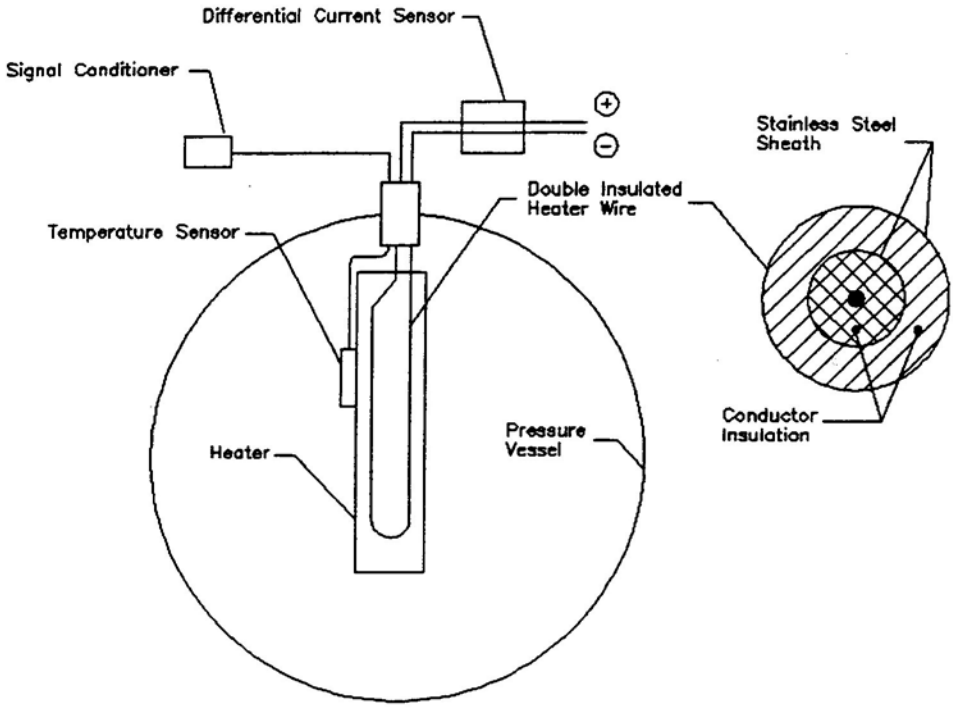

Figure C-4
Design Minimizing Electrical Arcing

Ignitions caused by electrical malfunction can be prevented by using double-insulated heater wire with a differential current sensor and a temperature sensor to monitor off-limit operating conditions

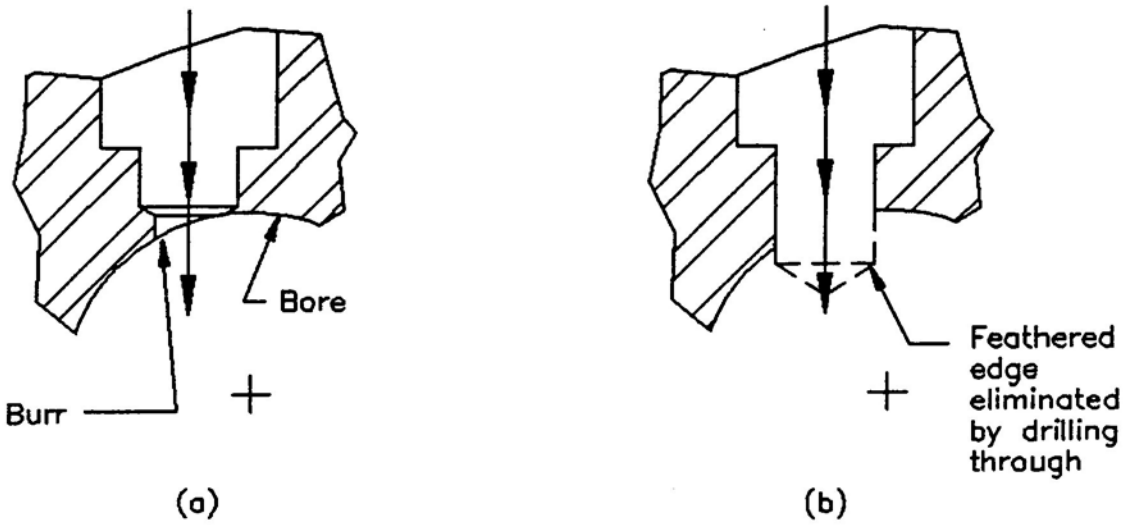

Figure C-5
Design With Sharp Edges

Insufficient drill-point penetration in the drilled hole creates a sharp edge at the intersection of the bore and drilled hole in Figure C-5a. As shown in Figure C-5b, this situation can easily be eliminated by extending the drill-point penetration. This configuration will be much less susceptible to several ignition mechanisms.

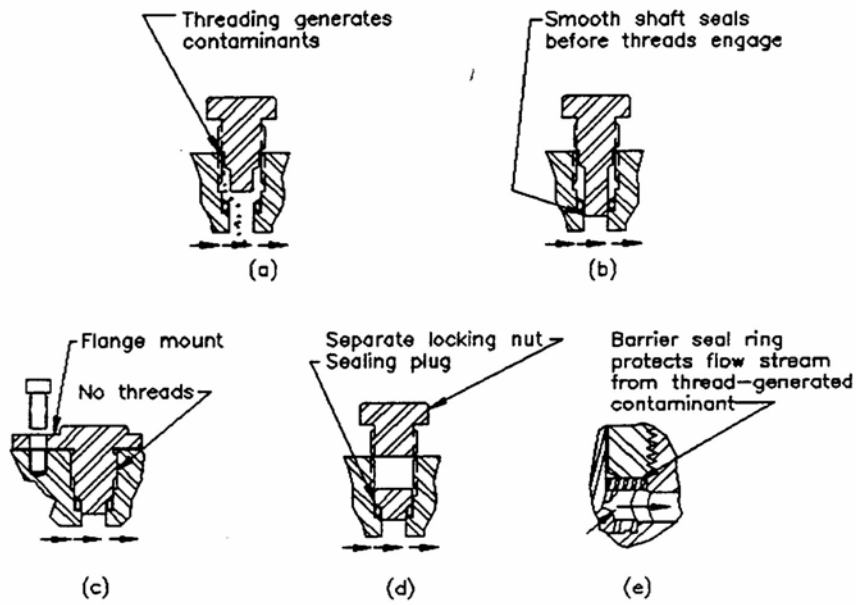

Figure C-6
Designs Showing Various Fitting and Particulate Generation Configurations

Figure C-6a shows how particulate can easily be generated during fitting assembly. The configuration will allow particles to be created while threading parts together to be released into oxygen-wetted regions. A build-up of particles can cause particle impact ignitions. Figures C-6 (b) through (e) show configurations that isolate assembly-generated contaminants from the oxygen.

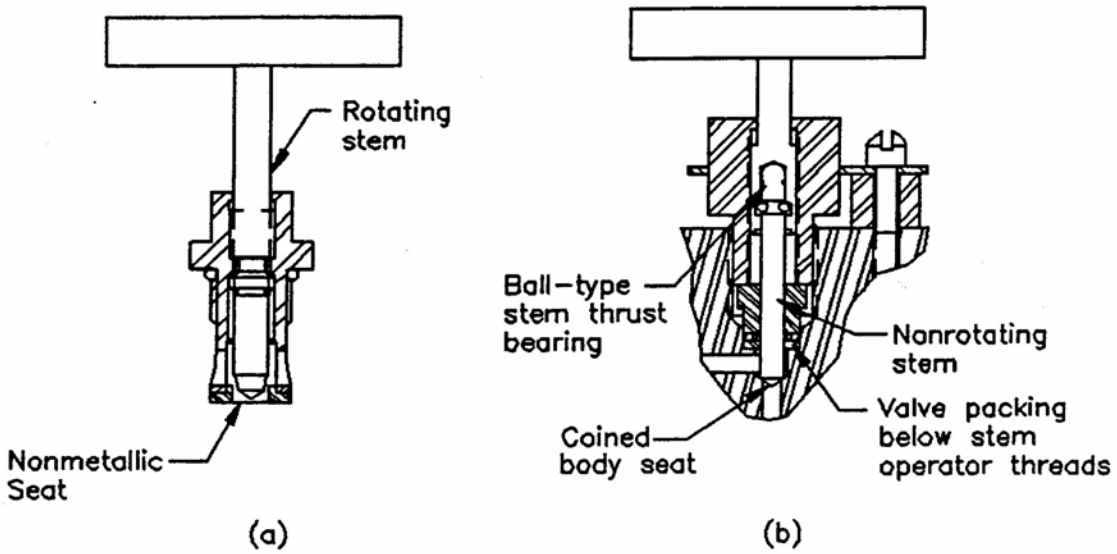

Figure C-7
Designs Illustrating Rotating Stem Valve and Particle Generation Configurations

Figure C7a shows a common valve configuration with a rotating valve stem. Manual valve actuation creates particulate in the threads and at the point of contract with the seat. Particle contamination can be minimized as shown in Figure C-7b by placing stem seals below the valve stem packing to isolate them from oxygen and by making the stem a nonrotation configuration. Axial stem movement without rotation will minimize particulate generation, and the hazard of particle impact ignition is reduced.

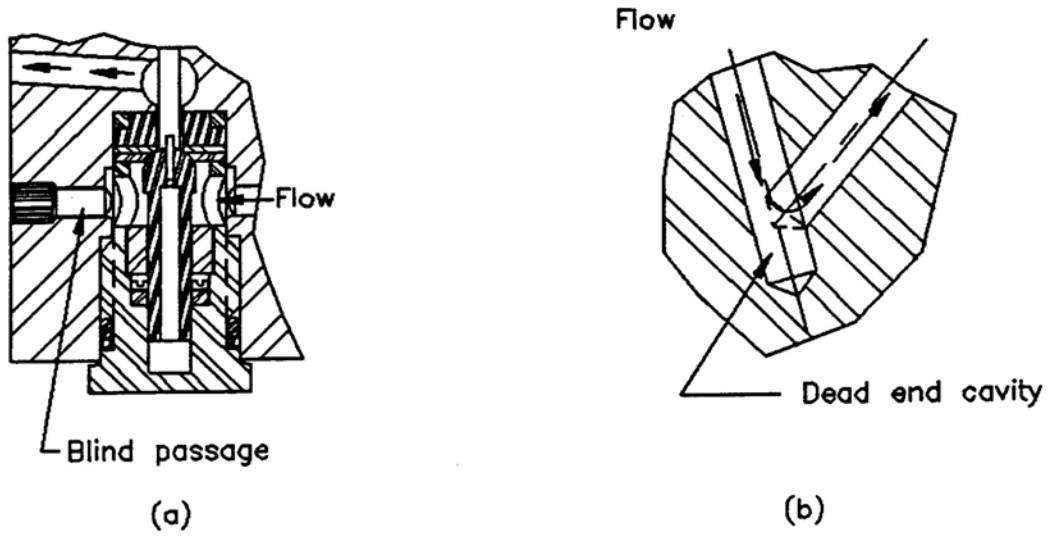

Figure C-8
Contaminant-Entrapping Configurations

Figure C-8a shows a configuration where flow passages are formed by intersecting drill holes and plugging part of the flow passage. Figure C-8b shows intersecting drilled holes with an oblique intersection angle and a large dead-end cavity. Both configurations are hard to clean and readily accumulate contaminants. The minimal benefits from ease of manufacture are more than offset by ignition hazards.

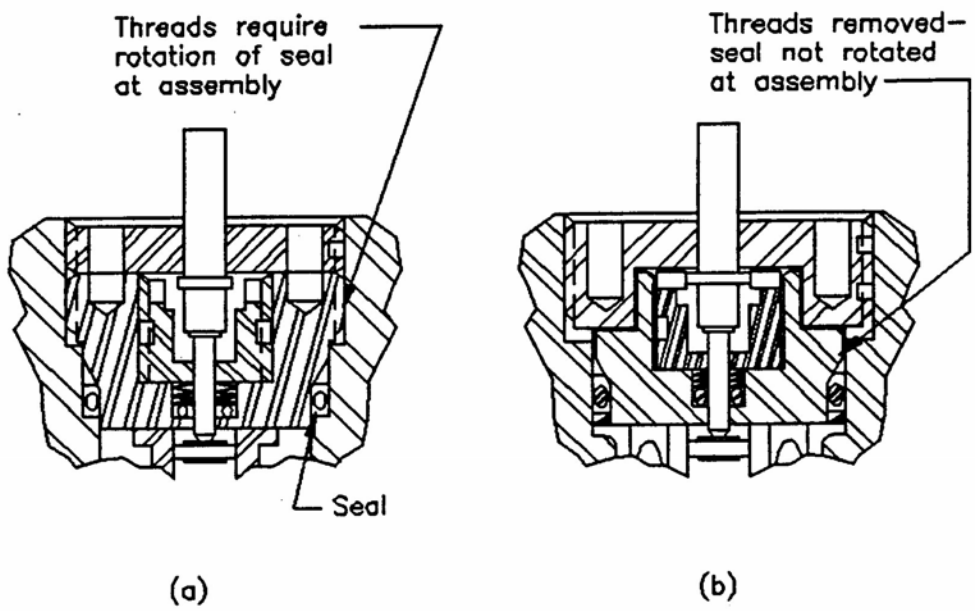

Figure C-9
Seal Configuration Reducing Assembly-Generated Contaminants

Figure C-9a shows a configuration where particulate generated by the threads at assembly can enter the oxygen-wetted valve regions, because the seal is not engaged during the threading operation. Figure C-9b shows one of many configurations that can be used to isolate assembly-generated particles from the contained oxygen and reduce wear and feathering of the seal or assembly.

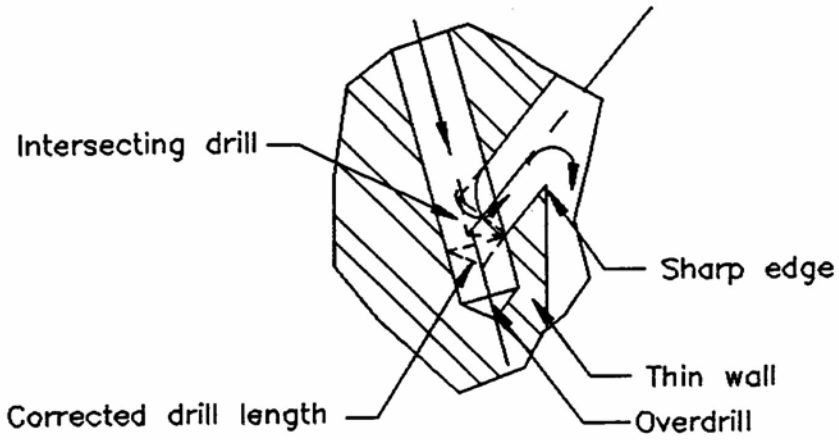

Figure C-10
Design Resulting in Thin Walls

This configuration should not be used because it combines the worst aspects of an overdrill for particle impact and accumulation with thin material sections, increasing the risks of kindling chain ignition of bulk materials. Manufacturing forethought can eliminate this situation.

C.5. References

ASME. *Safety Standards for Pressure Vessels for Human Occupanc*y. PVHO-1-1987, American Society for Mechanical Engineering, New York, NY (1987, or latest revision).

ASTM G 63. *Standard Guide for Evaluating Nonmetallic Materials for Oxygen Servic*e. Annual Book of ASTM Standards, Sect. 14, Vol. 14.02, American Society for Testing Materials, Philadelphia, PA (1985, or latest revision): pp. 1086-1110.

ASTM G 88. *Standard Guide for Designing Systems for Oxygen Service. Annual Book of ASTM Standard*s, American Society for Testing Materials, Sect. 14, Vol. 14.02, Philadelphia, PA (1985, or latest revision).

ASTM G 94. *Standard Guide for Evaluating Metals for Oxygen Servic*e. Fire Hazards in Oxygen Systems: ASTM Standards Technology Training Coursebook, B. L. Werley, Ed., ASTM Committee G-4.05, American Society for Testing Materials, Philadelphia, PA (1990, or latest revision).

Bahk, S., D. Chavez, B. Emery, and B. Wilson. “Protecting Aluminum Alloy From Particle-Impact Ignition With an AL2O3 Film.” Presented at the *1992 Impact Symposiu*m, Austin, TX (1992).

APPENDIX D

PRESSURE VESSELS-TESTING, INSPECTION, AND RECERTIFICATION

D.1 GENERAL

a. Pressure vessels will require testing, inspection, and qualification when installed and periodic recertification while in service. Refer to paragraph 7 for details on pressure vessel design for oxygen service.

b. Several accepted definitions of pressure vessels are:

(1) ASME Code pressure vessels

(2) NASA flight-weight pressure vessels. These do not meet ASME code. They typically have safety factors between 1.10 and 1.35.

(3) NASA medium-weight pressure vessels. These do not meet ASME code, are nonflight, and have safety factors between 1.35 and 4.00.

(4) DOT, API vessels, etc. These typically have safety factors between 1.5 and 4.0.

(5) Compressed gas cylinders meeting the requirements of 49 CFR (1986)

c. Compliance with NMI 1710.3 is required. Inspection and testing methods for establishing the suitability and safety of oxygen vessels, pressure vessels, piping, and equipment are also included in industrial guidelines and federal codes (CGA 341 1970; ASME Section VIII (1986a) and Section IX (1986b); ANSI/ASME B31.10 1986; NHB 1700.6).

d. The performance and design requirements of the system and its components should be verified by testing and analysis. Testing within off-limit ranges should be considered for evaluating limited design margins, single-point failures, and any uncertainties in the design criteria. Such testing should be performed per applicable codes. Before installation in a system, pressure vessels, piping, valves, flexible hoses, and pumping equipment should be pressure-qualification (proof)-tested to ensure they can withstand internal test pressures higher than design operating pressures.

e. If repairs or additions are made after the tests, the affected piping or equipment must be retested. Equipment not to be subjected to the pressure test should be either disconnected from the piping or isolated by blinds or other means during the test.

f. Cleanliness should be verified at system and component operating levels. Initial testing may be performed with clean inert fluids, and acceptance tests may be done with nitrogen. Life tests, however, should be conducted with oxygen.

D.2 Testing

D.2.1 Qualification and Acceptance Testing. Initial qualification tests to verify system integrity should not exceed the system's Maximum Allowable Working Pressure (MAWP). While the MAWP is held in the system, the test should be monitored from a remote location. After testing is completed, the components that have not previously been qualified for oxygen service should be reevaluated for flow and functional capabilities. They should be disassembled and inspected after testing.

D.2.2 Pressure Testing.

a. All oxygen containers and systems must be pressure-tested according to the requirements in NHB 1700.6. Hydrostatic testing is recommended as a relatively safer and more reliable method of system testing than pneumatic pressure testing. However, because of the energy stored, hydrostatic testing should still be considered hazardous (Roth 1964). Construction materials for the LOX container and its attachments and the finish tank should be inspected as required by applicable codes. The liquid container should be subjected to either a hydrostatic or a proof test.

Note: Hydrostatic testing should be completed before cleaning (see paragraph 8).

b. Hydrostatic and pneumatic tests should be performed per the requirements of applicable codes for pressure vessels and ANSI/ASME B31.l0 (1986) and B31.3 (1993) for piping and tubing. Pneumatic tests should be approved by the NASA center safety authority.

D.2.3 Performance Testing.

D.2.3.1 Heat Leak Tests. The boiloff rate and heat leak establish the maximum allowable hauling distance of a liquid-oxygen transportation system. For calculation of one-way travel time, see 49 CFR (1986). The boiloff tests should be repeated after driving the trailer for a minimum of 1600 km (1000 miles).

D.2.3.2 Leak Testing (NHB 1700.6)

a. Leak detection methods include soap tests (bubble tests), which have a sensitivity of approximately 10^{-3} cm^3/s (6×10^{-5} in^3/sec); and helium tests, which have a sensitivity of 10^{-9} cm^3/s (6×10^{-11} in^3/sec) or better. For vacuum-jacketed systems, chemical analysis of a vacuum pump discharge will indicate leakage. The helium mass spectrometer is the most sensitive leak detection instrument available for industrial use. The presence of a leak is shown on a meter that indicates how much helium is passing through the spectrometer tube. Helium leak testing should be performed before filling systems with oxygen.

b. The systems must be checked for leaks, initially under atmospheric temperature conditions and then when loaded with fluids under the MAWP.

c. Pressure-rise tests of vacuum-jacketed equipment will indicate if a leak is present.

d. Before the oxygen vessel is completely assembled, the inner vessel should be helium leak-tested with a mass spectrometer. Leak tests should be conducted with the mass spectrometer set at 1×10^{-9} –std cm^3/s (6×10^{-11} in^3/s) sensitivity. A no-leak indication for 15 minutes constitutes a successful test. Vacuum integrity and insulation stability tests should be performed by pumping the vacuum space to at least 30-mm Hg and sealing it. Pressure in the

vacuum space should not rise more than 5-mm Hg during 48 hours. If the rise is more than 5-mm Hg it may be due to a leak or to H_2O saturated perlite outgassing in the annulus.

e. Various leakage testing methods are described in Schmidt and Forney (1975) and KHB 1710.2A (1978).

f. All vacuum leak detection and/or pumping must be done utilizing oxygen compatible vacuum pump oils in the event that backstreaming conditions occur. Pump shutdown solenoid valves should be in place to prevent oil migration during power outages or pump failure modes.

D.2.4 Weld Testing. Unless the welded joints on the inner container of a LOX vessel are fully radiographed, all welds in or on the shell and heads, both inside and outside, should be tested by the magnetic particle method, the fluorescent dye penetrant method, or by the ultrasonic testing method (ASME 1986b, also see “Inspection” in this appendix). All cracks and other rejectable defects shall be repaired according to the repair procedures prescribed in the code under which the tank was built. The welder and the welding procedure should be qualified in accordance with ASME (1986b).

a. NASA is responsible for the welding done by NASA personnel and shall conduct the required qualification tests of the welding procedures and the welders or welding operators. Contractors are responsible for welding done by their personnel. A supplier shall not accept a performance qualification made by a welder or a welding operator for another supplier without the authorized inspector’s specific approval. If approval is given, acceptance is limited to performance qualification on piping and the same or equivalent procedures must be used, wherein the essential variables are within the limits set forth in ASME (1986b).

b. A performance qualification must be renewed as required by ASME (1986b).

D.2.5 Testing Aerospace (Flight-Weight) Pressure Vessels. NSS/HP-1740.1 includes standards for using fracture control techniques to design, fabricate, test, and operate aerospace pressure vessels. Where technically possible, each pressure vessel should be designed to accommodate pressure qualification and verification testing. Tests should be performed to confirm the design, manufacturing processes, and service life. Qualification tests must be conducted on flight-quality (Class III) hardware. All aerospace pressure vessels must be subjected to an acceptance pressure qualification test, such as described in NASA JSCM 1710 (1977) or MIL-STD-1522 (1986).

D.3 Inspection

a. Comprehensive inspection and control are required of all materials and components to be used in LOX and GOX piping installations. A quality control program should be established that will satisfy all NASA and construction code requirements for all piping, components, materials, and test equipment. Material identification and certification is required for all piping and components used in fabrication and assemblies subjected to LOX and GOX operating conditions. No substitutions for the materials and components specified are permitted, except where the substitution retains code compliance and has written approval.

b. Required inspections of the piping, storage, and system components should be made according to methods specified by NASA. Personnel performing inspections shall be qualified.

c. Before and during installation, piping and components should be examined for the integrity of seals and other means provided to maintain the special cleanliness requirements for LOX and GOX.

d. All controls and protective equipment used in the test procedure including pressure-limiting devices, regulators, controllers, relief valves, and other safety devices should be tested to determine that they are in good mechanical condition, have adequate capacity, and will not introduce contaminants.

e. The flexible hoses used for oxygen transfer should be hydrostatic-tested before initial use and recertified by visual inspection at least every 5 years. The hydrostatic test pressure and date to which the flexible hose can be used should be permanently imprinted on an attached tag. Flexible hoses should be secured per NASA specifications. Hoses that are determined to be unserviceable shall be turned in and destroyed to prevent further use.

f. Following are common inspection methods. Applicable codes will provide specific requirements.

(1) Visual safety examination to verify dimensions, joint preparation, alignment, welding or joining, supports, assembly, and erection.

(2) Magnetic particle examination to detect cracks and other surface defects in ferromagnetic materials. The examination should be performed according to applicable codes.

(3) Liquid penetrant examination to detect cracks and other surface defects in all types of metals. The examination should be performed according to applicable codes.

(4) Radiographic examination as required by NASA engineering design specifications:

(a) Random radiography

(b) 100-percent radiography according to the method outlined in applicable codes. High-pressure oxygen systems require 100- percent radiography.

(c) Ultrasonic examination of the material (including welded joints) for internal discontinuities and thickness. The examination should be according to applicable codes and is recommended for use on highly stressed weld joints.

g. In-Service Inspection and Recertification

(1) Ground-based Pressure Vessels and Systems.

(a) Inspection and recertification of ground-based pressure vessels should be according to NHB 1700.6. The procedures are illustrated and the pressure systems and service parameters are defined. Each component within the system is identified and placed into one of the following categories: pressure vessels, tanks, vacuum vessels, piping and piping

system components, and others (ANSI/ASME B31.10 1986; ANSI/ASME B31.3 1993; ASME 1986a; NHB 1700.1; 49 CFR 1986; Schmidt and Forney 1975; NASA JSCM 1710 1977; KMI 1710.1C latest revision; NHB 8060.1; NMI 1710.3).

(b) Recertification periods and intervening periods of inspection have been established for the components, based on variations in energy level with modifications to consider cyclic duty, corrosion, and location.

(2) Aerospace (Flight-Weight) Vessels.

(a) Inspection and recertification of aerospace vessels should be according to NSS/HP-1740.1.

(b) Fracture mechanics theory and test data should be used to establish proof-test conditions. The proof-test conditions should account for significant factors that could influence service life. Post-proof-test inspection is mandatory where the proof test does not provide, by direct demonstration, assurance of satisfactory performance over the specified service life. The fracture control plan should include required inspection intervals, periodic verification tests, and environmental conditioning for physical and corrosion protection (McHenry 1975; Stuhrke and Carpenter 1975).

h. Test Records.

(1) Test records should be kept on file for each system and piping installation. These records should include:

(a) The test data and identification of the system, component, and piping tested

(b) The test method (for example, hydrostatic, pneumatic, sensitive leak test)

(c) The test fluid, the test pressure, the test temperature, and the hold time at maximum test pressure

(d) The locations, types, and causes of failures and leaks in components and welded joints; the types of repair; and data on retest

(e) Written approval by NASA-assigned safety/design engineer

(f) Nondestructive evaluation data

(2) Records should also be kept concerning the cleaning procedures used. Record Keeping in paragraph 8 gives a complete description of the required information.

D.4 <u>Reference</u>

ANSI/ASME B31.3. “Chemical Plant and Petroleum Refinery Piping.” *American National Standard Code for Pressure Piping*, American National Standards Institute/American Society of Mechanical Engineering, New York, NY (1993, or latest revision).

ANSI/ASME B31.10. “Cryogenic Piping Systems.” *American National Standard Code for Pressure Piping*, American National Standards Institute/American Society of Mechanical Engineering, New York, NY (1986).

ASME. “Pressure Vessels.” *ASME Boiler and Pressure Vessel Code*, Sect. VIII, Div. 1, American Society of Mechanical Engineering, New York, NY (1986a, or latest revision).

ASME. “Qualification Standard for Welding and Brazing Procedures, Welders, Brazers, and Welding and Brazing Operators.” *ASME Boiler and Pressure Vessel Code*, Sect. IX, American Society of Mechanical Engineering, New York, NY (1986b, or latest revision).

CFR Title 49. *Transportation*. Code of Federal Regulations (latest revision).

CGA 341. *Tentative Standard Insulated Tank Truck Specification*. Second Ed. (plus addenda), Compressed Gas Association, Inc., Arlington, VA (1970, or latest revision).

KHB 1710.2A. *KSC Safety Practices Handbook*. Vol. 2, No. 41, NASA Kennedy Space Center, FL, July (1978, or latest revision).

KMI 1710.1C. *KSC Safety Program and Reliability and Quality Assurance Program*, NASA Kennedy Space Center, FL (latest revision).

McHenry, H. I. “Advances in Cryogenic Engineering.” *Fracture Mechanics and Its Application to Cryogenic Structures*, Vol. 22, K. D. Timmerhaus, R. P. Reed, and A. F. Clark, Eds., New York: Plenum Press (1975): pp. 9-26.

MIL-STD-1522. *Standard General Requirements for Safe Design and Operation of Pressurized Missile and Space Systems*. Military Standard, United States Air Force, Washington, DC (1986, or latest revision).

NASA JSCM 1710. *Certification and Recertification of Ground-Based Pressure Vessels and Pressurized Systems*. NASA Johnson Space Center, TX, May (1977, or latest revision).

NHB 1700.1. *Basic Safety Manual*. Vol. Vl-B, NASA TM-85234, NASA, (latest revision)

NHB 1700.6. *Guide for Inservice Inspection of Ground-Based Pressure Vessels and Systems*. NASA (latest revision).

NHB 8060.1. *Flammability, Odor, and Offgassing Requirements and Test Procedures for Materials in Environments That Support Combustion*. NASA TM-84066, NASA, Office of Safety and Mission Quality (latest revision).

NMI 1710.3. *Safety Program for Pressure Vessels and Pressurized Systems*. NASA Management Instruction, NASA (latest revision).

NSS/HP-1740.1. *NASA Aerospace Pressure Vessel Safety Standard*. NASA Technical Memorandum, NASA TM-81074, NASA (latest revision).

Roth, E. M. *Space-Cabin Atmospheres*. Part I, NASA SP-47 (1964): p. 13. Schmidt, H. W., and D. E. Forney. *ASRDI Oxygen Technology Survey*, Vol. 9, NASA SP-3090, NASA (1975).

Schutt, H. U., R. H. Knapp, and W. R. Schmeal. "Ignition of Some Common Engineering Alloys – The Critical Energy Input Concept and Effects of Oxygen Pressure*." Corrosion/76*, National Association of Corrosion Engineers, Paper No. 14 (1976).

Stuhrke, W. F., and J. L. Carpenter, Jr. *Fracture Toughness Testing Data – A Technology Survey*. OR-13432, Martin Marietta Aerospace; NASA Contract NAS3-17640, NASA CR-134752 (1975).

APPENDIX E

CODES, REGULATIONS, AND GUIDELINES LISTING

E.1 Increased safety of personnel and facilities requires compliance with existing regulations as well as adherence to accepted standards and guidelines.

E.2 Regulations are directives by official bodies authorized to create safety requirements enforceable by political jurisdiction. On the federal level, these include the DOT and the Occupational Safety and Health Administration (OSHA). State and local officials may also issue regulations.

a. Most regulations originate with the federal government and are contained in the Code of Federal Regulations (CFR). They are introduced by DOT, OSHA, or the U.S. Coast Guard.

b. 49 CFR (1986) designates the rule-making and enforcement bodies of the DOT. Current federal regulations that pertain to interstate shipping of LOX (cryogenic fluids) and compressed gases are listed in Table E-1.

c. Recommendations of other Government agencies and of interested parties are also considered.

d. Proposed regulations are usually published along with a description of the issues. Comments are sought and reviewed and consideration is given to oral arguments made by interested parties.

e. When final regulations are published, provisions are made for interested parties to petition the officials to amend or repeal these regulations.

E.3 <u>The regulations are mandatory</u>.

E.4 Various industrial and governmental organizations have published standards and guidelines for the construction of facilities and for safe procedures to be followed in the various phases of production, handling, and use of LOX.

E.5 Many of these published guidelines have been adapted by regulatory bodies such as the Department of Transportation, the Federal Aviation Administration, the Coast Guard, and the Office of Hazardous Materials.

E.6 Rules and guidelines are the technical information and safe practices and procedures developed by organizations (or groups representing such organizations) for their own needs, such as NASA and the Los Alamos National Laboratory. These organizations assign technically qualified personnel (or committees) to evaluate hazards and to develop information, rules, and guidelines for minimizing operational risks.

E.7 Codes and standards are the consensus safety documents developed by nonprofit trade associations, professional societies, or standards-making and testing bodies that serve industrial, commercial, and public needs. Examples are the American National Standards Institute and the National Fire Protection Association. They are empowered to include advisory and mandatory provisions that may be adopted by authorized regulatory agencies.

E.8 Numerous groups, societies, and associations are responsible for monitoring oxygen safety standards. These groups and their applicable documents follow.

a. American National Standards Institute (ANSI).

- ANSI B31.3, *American National Standard Code for Pressure Piping. Chemical Plant and Petroleum Refinery Piping*
- ANSI B31.5, *American National Standard Code for Pressure Piping, Refrigeration Piping*
- ANSI B31.8, *American National Standard Code for Pressure Piping, Gas Transmission and Distribution Piping Systems*
- ANSI B31.10, *American National Standard Code for Pressure Piping, Cryogenic Piping Systems*
- ANSI Z292.2 and Z292.3, *Systems and Consumer Sites* (equivalent to NFPA 50)

b. American Petroleum Institute (API).

- API 620, *Recommended Rules for Design and Construction of Large, Welded, Low-Pressure Storage Tanks*
- API 2510A, *Design and Construction of LNG Installations at Marine and Pipeline Terminals, Natural Gas Processing Plants, Refineries, and Other Industrial Plants*.

c. American Society of Mechanical Engineers (ASME).

- ASME Boiler and Pressure Vessel Code, Sect. VIII, Div. 1 and 2, *Pressure Vessels*
- PTC 25.3-1976, *Safety and Relief Valves*

d. Compressed Gas Association (CGA).

- *Handbook of Compressed Gase*s, Chapter 2: “Regulatory Authorities for Compressed Gases in United States and Canada; and Appendix A, Summary of Selected State Regulations and Codes Concerning Compressed Gases”
- Pamphlet C-7*, Guide to Preparation of Precautionary Labeling and Marking Of Compressed Gas Containers*
- Pamphlet G-4, *Oxygen*

- Pamphlet G-5.2, *Standard for Liquefied Hydrogen Systems at Consumer Sites*
- Pamphlet P-1, *Safe Handling of Compressed Gases in Containers*
- Pamphlet S-1.l, *Safety Relief Device Standards - Cylinders for Compressed Gases*
- Pamphlet S-1.2, *Safety Relief Device Standards - Cargo and Portable Tanks for Compressed Gases*
- Pamphlet S-l.3, *Safety Relief Device Standards - Compressed Gas Storage Containers*
- Technical Standard CGA-341, *Insulated Tank Truck Specification for Cold Liquefied Gases*

e. Federal Government.

- 14 CFR 60-199, *Aeronautics and Space*
- 29 CFR 1910, *Occupational Safety and Health*
- 46 CFR 140-149, *Shipping*
- 49 CFR 101-179, *Transportation*
- Federal Motor Carrier Safety Regulations, *Federal Highway Administratio*n, Chapter 3 and Parts 390-397
- The Association of American Railroads, *Specifications for Tank Cars*
- IATA, *Air Transport Restricted Articles*

f. Insuring Associations.

- American Insurance Association
- Factory Mutual Organization
- Industrial Risk Insurers

g. National Fire Protection Association (NFPA).

- NFPA 53, *Manual on Fire Hazards in Oxygen-Enriched Atmospheres*
- NFPA 59A-1975, *Standard for Storage and Handling of Liquefied Natural Gas at Utility Gas Plants*
- NFPA Pamphlet 50, *Standard for Bulk Oxygen Systems at Consumer Sites*

- NFPA Pamphlet 68, *Explosion Venting*
- NFPA Pamphlet 69, *Explosion Prevention System*
- NFPA Pamphlet 70, *National Electric Code*
- NFPA Pamphlet 78, *Lightning Protection Code*
- NFPA Pamphlet 496, *Purged and Pressurized Enclosures for Electrical Equipment in Hazardous Locations*
- NFPA Volumes 1 and 2, *National Fire Codes*

h. Other Organizations (including U.S. Government Agencies).

- Arthur D. Little, Inc. (ADL)
- Battelle Columbus Laboratories (BCL)
- Bureau of Mines (BM).
- Chemical Propulsion Information Agency (CPIA)
- Department of Transportation (DOT)

  – Federal Aviation Administration (FAA)

  – Federal Highway Administration

  – Federal Railroad Administration

  – Hazardous Materials Regulation Board (HMRB)

  – Office of Pipeline Safety

  – Office of Hazardous Materials (OHM)

  – US Coast Guard (USCG)
- Occupational Safety and Health Administration (OSHA)
- National Aeronautics and Space Administration (NASA)
- National Bureau of Standards (NBS) (this organization is now the National Institute of Standards and Technology (NIST))
- University of California, Los Alamos National Laboratory (LANL)

i. Professional Societies.

- American Industrial Hygiene Association (AIHA)
- American Institute of Chemical Engineers (AIChE)
- American Society of Heating, Refrigeration, and Air Conditioning Engineering (ASHRAE)
- American Society of Mechanical Engineers (ASME)
- Institute of Electrical and Electronic Engineering (IEEE)
- Instrument Society of America (ISA)

j. Technical and Trade Groups.

- American Association of Railroads (AAR)
- American Gas Association (AGA)
- American Petroleum Institute (API)
- Compressed Gas Association (CGA)
- Manufacturers' Chemists Association (MCA)
- Manufacturers' Standardization Society (MSS)
- Manufacturers' Standardization Society of Valve and Fittings Industry (MSS)
- National Electrical Manufacturer's Association (NEMA)

k. Testing Standards and Safety Groups.

- American National Standards Institute (ANSI)
- American Society for Testing and Materials (ASTM)
- National Fire Protection Association (NFPA)
- National Safety Council
- Underwriters' Laboratories, Inc.

E.9 Most of these guidelines and standards are not mandatory, except those from Government organizations. Within NASA, some controls are mandatory for NASA employees such as NHB 1700.1. In addition, each NASA center has its own safety manuals, management instructions, etc. NHS/IH 1845.2 establishes requirements necessary to ensure safe entry and work in confined spaces and reviews the physical effects of varying oxygen levels and partial pressures.

Table E-1
Federal Regulations for Shipping Oxidizers Interstate

(For changes in existing federal code for transportation of cryogenic fluids proposed by Hazardous Materials Regulations Board, see Federal Register Docket No. H.M. 115, Notice No. 74-3.)

General Information: R.M. Graziano's tariff 30	Summary of DOT Hazardous Materials Regulations
Highway and Railroad: CFR Title 49 172, 173, 174, 175, 176, 177	Hazardous materials regulations; labeling shipping classification; oxygen, nitrogen, neon, fluorine, argon, carbon monoxide
CFR Title 49 173.02	General information on charging cylinders, fluoride shipped in cylinders equipped with valve protection and without safety relief devices
CFR Title 49 177.840, 177.848, 177.860	Loading and unloading requirements: procedures in accidents (includes procedures for leakage of poisons, fluorine, and carbon monoxide)
CFR Title 49 178.337, 178.340	Specifications for MC331 cargo tanks: design, construction, testing, and certification
Portable tanks: 49 CFR 178.245, 178.246, 179.247 173.315, 173.32	Information on design, loading of compressed gases, and safety relief requirements
Tank cars: 49 CFR 173.304, 173.314, 174.500, 176.703	Allowable filling densities, labeling for liquids and gases, and unloading requirements
49 CFR 177.337, 177.340, 177.824	Carbo tank specifications and general design requirements for transportation of compressed gases
49 CFR 179	Requirements for transportation of hazardous materials: thermal protection requirements; restraint systems; materials, insulation, venting, and safety relief requirements detailed
49 CFR 179.104, 179.105	Special tank-car tank requirements;
49 CFR 179.200 to 179.400	Safety relief valve requirements: includes Appendix A of the AAR Specifications for Tank Cars (AAR 204W)

Table E-1
Federal Regulations for Shipping Oxidizers Interstate (continued)

General Information: R.M. Graziano's tariff 30	Summary of DOT Hazardous Materials Regulations
Cylinder design: 49 CFR 100 to 199	Information on transportation of cylinders containing gas or liquified gases; specifications for 4L pressure vessels
49 CFR 173.301 173.302, 173.337, 173.36, 178.37 178.45	General information on cylinder specifications, manifolding, filling, pressure limits, and safety relief
Pipelines: 49 CFR 191 to 195	Minimum standards for inspection, testing, and maintenance of natural gas and other gas pipelines; new standards published in 1977
Air transport: 14 CFR 103 Tariff 6D	Limitations of shipment by air; air-transport-restricted articles and regulations

E.10 References

CFR Title 49. *Transportatio*n. Code of Federal Regulations (latest version).

NHB 1700.1. *Basic Safety Manua*l. Volume V1-B, NASA TM-85234, NASA, (latest revision).

NHS/IH 1845.2. *NASA Health Standard for Entry Into and Work in Confined Space*s. NASA (latest revision).

APPENDIX F

SCALING LAWS, EXPLOSIONS, BLASTS, AND FRAGMENTS

F.1 Scaling Laws. A comprehensive review of accidental explosions has been published in Strehlow and Baker (1975). It characterizes explosions by type, discusses the various scaling laws and summarizes nonideal blast wave behavior and the mechanisms by which blast waves cause damage. (Also see Stull 1977, Hannum 1984, and DOD 6055.9 1992.) The classical experimental work on blast waves has mainly used either high explosives or nuclear weapons to produce the waves. The intermediate and far-field waves usually resemble those predicted from point-source theory quite closely, so either high explosives or nuclear explosions can be considered ideal.

a. A point-source blast wave is a blast wave conceptually produced by the instantaneous deposition of a fixed quantity of energy at an infinitesimal point in a uniform atmosphere. Essentially, a point-source wave propagating away from its origin creates three regions of interest. The first is the near-field wave in which pressures are so large that external pressure (or counterpressure) can be neglected. This region is followed by an intermediate region of extreme practical importance because the overpressure and impulse are sufficiently high to do significant damage. The intermediate region is followed in turn by a “far-field” region that yields to an analytic approximation such that the positive overpressure portion of the curve for large distances can be easily constructed from the overpressure time curve at one far-field position.

b. Scaling the properties of point-source blast waves is common practice and is subject to cube-root scaling (Sach’s law, see Strehlow and Baker (1975) and Hannum (1984)). Theoretically, a given pressure will occur at a distance from an explosion that is proportional to the cube root of the energy yield. Full-scale tests have shown this relationship between distance and energy yield to hold over a wide range of explosive weights. According to this law, if d_1 is the distance from a reference explosion of W_1 (in pounds) at which a specified static overpressure or dynamic pressure is found, for any explosion of W (in pounds) these same pressures will occur at a distance d given by

$$\frac{d}{d_1} = \left[\frac{W}{W_1}\right]^{\frac{1}{3}} \qquad \text{(F-1)}$$

Consequently, plots of overpressures for various weight of explosives can be superimposed on the curve for 0.45 kg (1 lb) of explosive if, instead of distance, the distance divided by the cube root of the weight is plotted against overpressure. This correlating parameter, $d/(W^{1/3})$, called “scaled distance,” is used to simplify the presentation of the blast wave characteristics.

c. Cube-root scaling can also be applied to arrival time of the shock front, positive-phase duration, and impulse; the distances concerned also are scaled according to the cube-root law. The relationships can be expressed in the form

$$\frac{t}{t_1} = \frac{d}{d_1} = \left[\frac{W}{W_1}\right]^{\frac{1}{3}}$$

$$\frac{I}{I_1} = \frac{d}{d_1} = \left[\frac{W}{W_1}\right]^{\frac{1}{3}}$$

(Eq. F-2)

where:

t = arrival time or positive time of duration
t_1 = arrival time or positive-phase duration for reference explosion
I = impulse
I_1 = impulse for the reference explosion W_1
d = distance from origin
d_1 = distance from origin for reference explosion W_1

If W_1 is taken as 1 lb (0.45 kg), the various quantities are related as

$t = t_1W^{1/3}$ at a distance $d = d_1W^{1/3}$
$I = I_1W^{1/3}$ at a distance $d = d_1W^{1/3}$.

d. However, no general laws exist for scaling blast waves from nonideal explosions because not all the physical parameters affecting such explosions are known. The general concept of equivalence for a nonideal explosion is not well understood. Usually the near-field overpressures are much lower than those of a point-source explosion that produces the equivalent far-field overpressure, but it is not obvious exactly what the relationship between near-field and far-field behavior should be or how this relationship differs with the type of accidental explosion. It is also not obvious how to evaluate the blast damage of any particular type of accidental explosion or how much the damage depends on the type of explosion.

F.2 Explosions

F.2.1 Explosions in Buildings.

a. Explosions in buildings are of three main types. The severity of damage increases from Type 1 to Type 3.

(1) Type 1. Some combustible material spills, resulting in a slow deflagration wave or flashback fire that causes a relatively slow pressure buildup in the building.

(2) Type 2. A piece of equipment explodes, producing a blast wave inside the building that either damages the structure or is relieved by venting.

(3) Type 3. A leak occurs and the combustible mixture that forms detonates.

b. In a detonation, the blast wave behavior and the damage patterns are determined primarily by the behavior of the detonation and are only modified by the confinement. For the previously discussed explosions, the degree of confinement or the bursting pressure of the vessel or building determines the nature of the blast wave and the damage patterns generated.

F.2.2 Tank Ruptures.

a. A rupture followed by combustion is a very special type of explosion. It occurs when a tank of liquefied fuel under pressure is heated by an external fire until it vents and torches. For an explosion to occur, the heating of the venting tank must be sufficiently intense to cause the internal pressure to rise above the tank's bursting pressure, even with venting. This type of explosion has three distinct damage-producing effects:

(1) A blast wave caused by internal pressure relief

(2) A fireball caused by subsequent massive burning of the tank's contents in the air

(3) Large fragments scattered for long distances because of the ductile nature of the tank's rupture and the rocketing of pieces by the pressure of the tank contents

b. Because propellant explosions are not considered as point sources, the comparison between ideal and accidental explosions is inexact; the concept of TNT equivalence, which is widely used in safety studies, is also very inexact and may be quite misleading. Recent studies show that no single TNT equivalent can be used to describe the blast generated by a rupturing pressure vessel. However, the blast pressures combined with the positive shock-wave durations yielded positive shock wave impulse values, whose impulse-distance relationship was similar in slope to that for TNT. For large, high-pressure vessels, the impulses from tank rupture and those for TNT equivalent are not significantly different quantitatively. A general comparison of blast and fragment parameters generated by tank rupture and an equivalent TNT charge showed that static (side-on) pressures were higher for TNT above 41 to 69 kPa (6 to 10 psi) and lower for TNT at pressures below these values. Peak reflected (face-on) tank pressures showed a similar relationship to face-on TNT pressures. Positive shock wave durations were longer for tank rupture than for TNT. Impulse values, both face-on and side-on, were similar for TNT and tank rupture. Damage, depending on distance, may be greater for tank rupture. Tank-rupture fragments were larger than would be expected from a cased TNT charge (all above information from Baker et al. 1975). Fragment velocities would be higher for a cased TNT charge than for tank rupture (Baker et al. 1974, 1978). The term "strength" refers to several characteristics of a blast wave that relate to the wave's potential for causing damage. These characteristics are (Kinney and Graham 1985):

(1) Side-on overpressure. The overpressure in the blast wave, which would be observed were there no interaction between the blast and the structure.

(2) Duration. After the wave front passes, the static pressure falls and actually drops slightly below atmospheric pressure. However, it is the duration of the positive phase (the time required to drop the peak overpressure to atmospheric pressure) that is of greatest significance in causing damage.

(3) Blast-wind velocity. Behind the wave front the air moves at considerable speed in the same direction as the wave. For example, a peak overpressure of 34.5 kPa (5 psi) will be accompanied by a 72-m/s (236-ft/s) wind (Kinney and Graham 1985).

(4) Stagnation overpressure. The combined effects of side-on overpressure and the blast wind describe the load on the front face after the reflected shock has died out.

(5) Reflected overpressure. If a blast wave strikes a surface (such as a wall) at normal incidence, the airflow will stop, and a shock wave will reflect backward from the surface. Behind the reflected shock, the surface will briefly be subjected to the peak reflected overpressure (sometimes called the face-on overpressure), which the instantaneous dynamic loads impose on the front face of the structure.

(6) Positive phase impulse. The area under the positive phase of the side-on overpressure curve. Impulse has dimensions of force-time product and is obtained graphically given the side-on overpressure curve as a function of time.

F.2.3 Ground-Handling System Explosions.

a. The hazards from accidental explosions in propellant ground-handling systems are similar in many respects to the hazards from such explosions in flight vehicles. These accidents cause damage by air-blast loading, fragment or appurtenance impact, radiation from fireballs, or fire from the ignition of combustible materials (Strehlow and Baker 1975; DOD 6055.9 1992; Hannum 1984; AMCP-706-180 1972; Strehlow, Savage, and Vance 1972).

b. Both flight and ground systems can fail by material fatigue caused by overstressing. However, many of the possible causes of flight vehicle explosions such as loss of thrust during launch, guidance system failure, or rupture of a bulkhead separating a fuel from an oxidizer, are inapplicable for ground-handling systems. Conversely, transportation accidents followed by explosions are not likely to occur in flight.

c. Because ground-handling systems have fewer weight constraints and therefore higher safety factors than do flight vehicles, the nature of the hazards is different. Also, the total energy stored in compressed gases or the total chemical energy stored in fuels and oxidants can be much greater than for many flight systems.

d. Many more accidental explosions involving fuels and compressed fluids have occurred in ground-handling systems than in flight vehicles. These include

(1) Simple pressure-vessel failure because of fatigue or flaw growth.

(2) Vessel failure induced by impact during a transportation accident

(3) Vessel failure by overpressure because of overheating

(4) Vessel and pipeline failure by overpressure, corrosion, or erosion

(5) Fuel leakage followed by a vapor cloud explosion

e. The workbooks and handbooks included in the references (Baker et al. 1974; AMCP-706-180 1972) provide methods for predicting blast and fragment characteristics and effects for a wide range of possible explosion accidents in ground and flight systems. The material in the workbooks allows estimation of

(1) Explosive energy yield or energy release

(2) Characteristics of blast pressure waves generated by spherical and nonspherical explosions

(3) Effects of pressure waves on certain classes of targets

(4) Characteristics of fragments generated by ground equipment explosions, including massive vessel parts that rocket

(5) Effects of fragment impact, including effects of fragment revetments on blast waves. Various safety factors are included in the prediction methods.

F.3 Blasts. The primary source of blasts from accidental explosions in propellant ground handling and transportation systems is the rupture of compressed fuel or oxidizer cylinders, vessels, or lines.

a. The various formulas for total energy release for compressed gas bursts are reviewed in Baker et al. (1978). These include:

(1) The explosive yield from compressed gas pressure burst.

$$E = \left[\frac{p_1 - p_a}{\gamma_1 - 1}\right] V_1$$

(Eq. F-3)

where:

E = blast yield (energy)
P_1 = initial absolute pressure in the vessel
P_a = absolute pressure of the outside atmosphere
γ_1 = ratio of specific heats for the gas in the vessel
V_1 = initial volume of the vessel

(2) An estimate based on isentropic expansion from initial burst pressure to atmospheric pressure

$$E = \frac{p_1 V_1}{\gamma_1 - 1}\left[1 - \left[\frac{p_a}{p_1}\right]^{\frac{(\gamma_1 - 1)}{\gamma}}\right]$$

(Eq. F-4)

(3) A lower limit on the energy released, for example by constant-pressure addition of energy to the explosion source region at a release rate so slow that it does not produce a blast wave

$$E = p_a (V_f - V_1) \qquad \text{(Eq. F-5)}$$

where:

V_f = the final volume occupied by the gas that was originally in the vessel

b. The three equations are given in descending order of total blast energy. The blast yield is considered to lie between Equations F-4 and F-5. Equation F-3 gives slightly higher values than does Equation F-4, but both are considered very conservative (Baker et al. 1978).

c. The equations given for blast yields are based on the assumption that all the energy that can drive a blast wave does so, depending only on the energy release rate. For real vessels, some energy must be absorbed by the vessel as it fractures, both in the fracturing process itself and in accelerating the vessel fragments to their maximum velocity.

d. Baker et al. (1978) provide methods for estimating the velocity and kinetic energy of the vessel fragments. Also, the workbooks review the characteristics of blast waves from liquid propellant explosions and spherical gas vessel bursts and their similarities to and differences from waves from condensed high explosives such as TNT.

e. To estimate blast wave properties, dimensionless parameters are used (Baker et al. 1978). Prediction curves for scaled values of these parameters are given as functions of $\bar{R}$, a dimensionless distance. The properties of interest are p_s, side-on overpressure, t_a, time-of-arrival of side-on overpressure peak, T_s, time-of-duration of the positive phase of the side-on overpressure, and I, the positive phase impulse. The dimensionless parameters, designated with a bar on top, are defined as:

$$\bar{R} = \frac{R p_a^{\frac{1}{3}}}{E^{\frac{1}{3}}}$$

$$\bar{P} = \frac{p_s}{p_a}$$

$$\bar{t}_a = t_a A_a \frac{p_a^{\frac{1}{3}}}{E^{\frac{1}{3}}}$$

$$\bar{T}_s = \frac{T_s A_a p_a^{\frac{1}{3}}}{E^{\frac{1}{3}}}$$

$$\bar{I} = \frac{I_s A_a p_a^{\frac{2}{3}}}{E^{\frac{1}{3}}}$$

where:

p_a and E are as defined for Equation F-3
R = radius of the blast wave (standoff distance)
p_s = side-on overpressure
t_a = arrival time of side-on overpressure peak
A_a = ambient sound velocity
T_s = duration time of positive phase of side-on overpressure
I_s = positive-phase impulse of side-on overpressure

f. Scaling laws for nonideal explosions are not known exactly now, but they can be easily developed once the physics of such explosions are well known. They will likely be variants on Sach's law (Strehlow and Baker 1975; Hannum 1984). Theoretical work and some test results suggest that at distances at which the pressure levels are over approximately 103.4 kPa (15 psi) for LOX-liquid hydrogen explosions, the TNT equivalence in terms of peak pressure is approximately 0.07; for pressure levels from 101.4 to 0.69 kPa (14.7 to 0.1 psi), the TNT equivalence is approximately 1; and below 0.69 kPa (0.1 psi) it is approximately 2.0. Interpreting these numbers means that at 101.4 kPa (14.7 psi) and above, it takes approximately 6.5 kg (14.3 lb) of LOX and liquid hydrogen to generate the same pressure-distance relationship as does 0.45 kg (1 lb) of TNT; approximately 0.45 kg (1 lb) of LOX and liquid hydrogen between 101.4 to 0.69 kPa (14.7 psi to 0.1 psi); and only 0.23 kg (0.5 lb) of LOX and liquid hydrogen at less than 0.69 kPa (0.1 psi). If blast wave characteristics can be defined for accidental explosions, correlation with damage effects on buildings, vehicles, humans, etc., can be made from existing methods and data in the literature (Hannum 1984; Baker et al. 1978; AMCP-706-180 1972).

g. Fragmentation patterns from accidental explosions and the damaging effects of these fragments are difficult to predict. The blast waves produced by the explosion of liquid propellants that are accidentally mixed are usually unreproducible and difficult to model adequately. Extensive studies show that liquid-propellant explosions differ from TNT explosions in a number of ways, so the concept of TNT equivalence is far from exact.

F.4 Fragments

a. The fragments generated by bursting oxygen high-pressure gas or liquid vessels can vary widely in size and shape, depending on the total energy released, the release rate, and the pressure vessel design. A vessel that bursts because of a seam failure or crack propagation may generate only one fragment. This fragment can be propelled by the release of the contents. At the other extreme, a vessel whose contents explode can produce many small fragments.

b. In similar explosions, fewer fragments are generated in ground systems than in flight systems, primarily because of differences in pressure vessel materials and construction. Analytical predictions of fragment velocity distributions, fragmentation patterns, and free-flight ranges for lifting and rocketing fragments are given in Moore (1967).

c. Results of fragmentation studies providing fragment characteristics, mass, shape, and range as they relate to estimated blast yields of exploding liquid-propellant flight system tanks are included in Strehlow and Baker (1975); Baker et al. (1974, 1978); Hannum (1984); AMCP-706-180 1972; Strehlow, Savage, and Vance (1972); Moore (1967); Kuchta (1973); and Farber (1973). Methods of determining yields of blast behavior are described in Hannum (1984); Baker et al. (1978); Kuchta (1973); and Farber (1973).

d. Methods for predicting velocities and ranges of fragments from bursting vessels are available. The fragment range information is based on data from various explosion sources. Data are included in Strehlow and Baker (1975); KHB 1710.2A (1978); Hannum (1984); AMCP-706-180 1972; and Strehlow, Savage, and Vance (1972).

e. The fragment range and mass distributions for various explosion sources are also included in Strehlow and Baker (1975); KHB-1710.2A (1978); Hannum (1984); AMCP-706-180 (1972); and Strehlow, Savage, and Vance (1972).

F.5 Refences

AMCP-706-180. *Engineering Design Handbook, Principles of Explosive Behavior.* United States Army Material Command, April (1972, or latest revision).

Baker, W. E., J. J. Kulesz, R. E. Ricker, R. L. Bessey, P. S. Westine, V. B. Parr, and G. A. Oldman. *Workbook for Predicting Pressure Wave and Fragment Effects of Exploding Propellant Tanks and Gas Storage Vessels.* NASA CR-134906, Contract NAS3-19231, November (1975).

Baker, W. E., J. J. Kulesz, R. E. Ricker, R. L. Bessey, P. S. Westine, V. B. Parr, and G. A. Oldman. *Workbook for Estimating Effects of Accidental Explosions in Propellant Ground Handling and Transport Systems.* NASA CR-3023, NASA (1978).

Baker, W. E., V. Parr, R. Bessey, and D. Cox. *Assembly and Analysis of Fragmentation Data for Liquid Propellant Vessels.* 74N1562, NASA CR-134538, NASA (1974).

DOD 6055.9. *DoD Ammunition and Explosives Safety Standards.* United States Department of Defense, Washington, DC (latest revision).

Farber, E. A. “Explosive Yield Limiting Self-Ignition Phenomena in L02/LH2 and LO2/RP-1 Mixtures.” *Minutes of the 15th Explosives Safety Seminar,* Vol. 2, NTIS (1973): pp. 1287-1304.

Hannum, J. A. E., Ed. “Hazards of Chemical Rockets and Propellants.” *Safety, Health and the Environment,* Vols. 1 and 2, (AD-A160951), CPIA-PUBL-394-VOL-l and VOL-2, Chemical Propulsion Information Agency, Johns Hopkins University, MD (1984).

KHB 1710.2A. “Safety Operating Procedures, No. 41 - Pressure System Safety.” *KSC Safety Practices Handbook,* Vol. 2, NASA Kennedy Space Center, FL (latest revision).

Kinney, G. E., and K. J. Graham. *Explosive Shocks in Air.* Second Ed., New York: Springer-Verlag (1985).

Kuchta, J. M. *Fire and Explosion Manual for Aircraft Accident Investigators.* AFAPL-TR-73-74, August (1973).

Moore, C. V. “The Design of Barricades for Hazardous Pressure Systems.” *Nuclear Engineering Design,* Vol. 5 (1967): pp. 81-97.

Strehlow, R. A., L. D. Savage, and G. M. Vance. *Measurement of Energy Release Rates in Vapor Cloud Explosions.* UILU-ENG-72-0503, University of Illinois, IL, August (1972).

Strehlow, R. A., and W. E. Baker. *The Characterization and Evaluation of Accidental Explosions.* UILU-ENG-75-050*3,* Illinois University; NASA Grant NSG-3008, NASA CR-134779 (1975).

Stull, D. R. *Fundamentals of Fire and Explosion.* AIChE Monograph Series, Vol. 73, No. 10 (1977)