Achieving High Reliability and Survivability for Greenhouse Gases Observing Satellite (GOSAT)

2008/April 16

Y. Kaneko, T. Hamazaki, M. Nakajima,
M. Kasuya, and T. Miura
GOSAT Project Team
Japan Aerospace Exploration Agency

Topics

1. GOSAT Overview
2. Enhancement of Robustness and Survivability

1. GOSAT Overview

- GOSAT is
  - the Greenhouse gases Observing SATellite.
  - the satellite to monitor the global distribution of Green House Gases.
  - scheduled to be launched by H-IIA launch vehicle in Japanese Fiscal Year 2008.

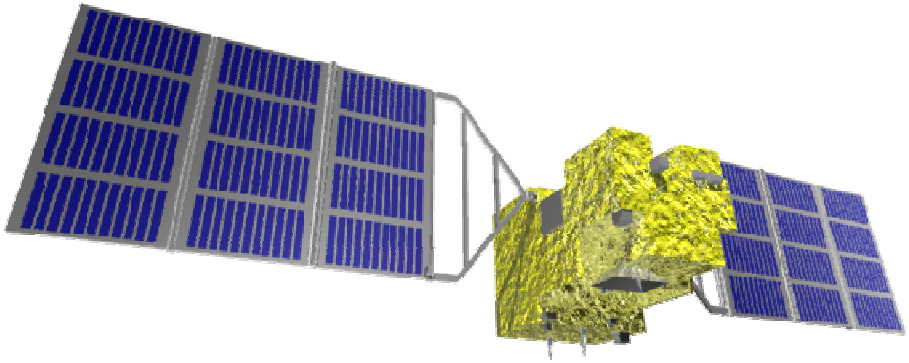

1-1.GOSAT Mission Targets

(1) To observe CO_2 and CH_4 column density

- at 100-1000km spatial scale (with scanning mechanics)
- with relative accuracy of
  0.3 ~ 1% for CO_2(1 ~ 4ppmv, 3 month average) and
  0.6 ~ 2% for CH_4.
- during the Kyoto Protocol's first commitment period (2008 to 2012).

(2) To reduce sub-continental scale CO_2 annual flux 'estimation errors' by 1/5 ~ 1/2.

- 0.54 GtC/yr → 0.11 ~ 0.27 GtC/yr

1-2. Organization

GOSAT is the joint project of JAXA, MOE (Ministry of the Environment) and NIES (National Institute for Environmental Studies).

MOE

•Sensor development
(Funding Support)
•Date use for Policy development

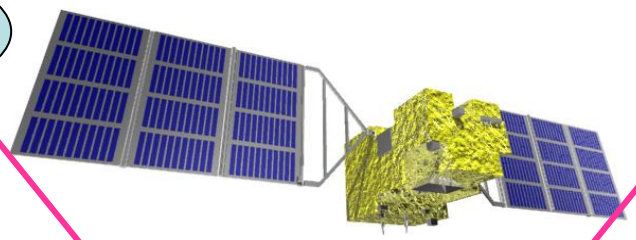

JAXA

•Sensor development
•Satellite development
•H-IIA launch
•Satellite operation
•Data acquisition
•Calibration

NIES

•Algorithms development
•Data use for science
•Source and sink inversion
•Validation

1-3. Satellite Configuration

Thermal And Near infrared Sensor for carbon Observations

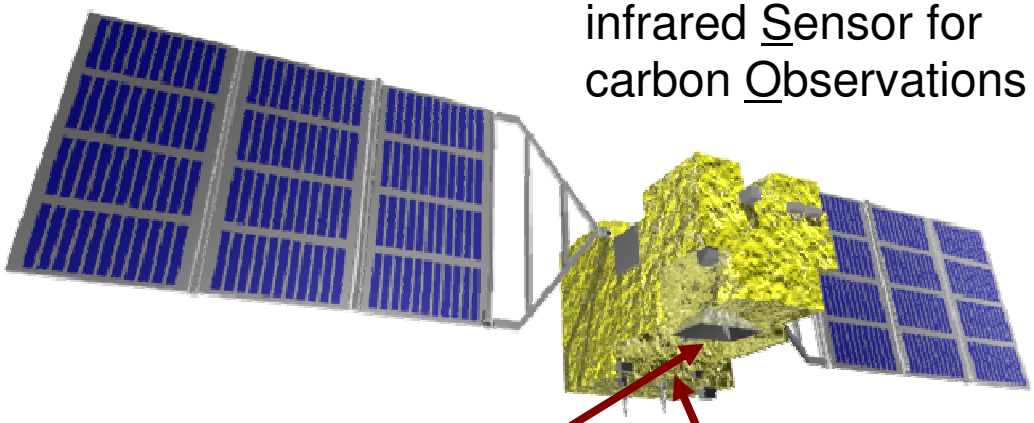

TANSO-FTS

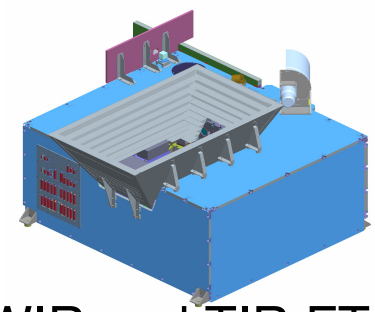

SWIR and TIR FTS

TANSO-CAI

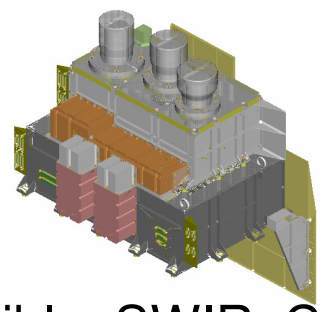

UV, Visible, SWIR Cloud and Aerosol imager

Structural & Thermal Model of GOSAT

1-4. Satellite Specifications

Size	Main body	3.7m(H) x1.8m(W) x 2.0m(D)
	Wing Span	13.7m
Mass	Total	1,750kg
Power	Total	3.8kW(EOL)
Life Span	5 years	
Orbit	Sun Synchronous Orbit	
	Local time	13:00+/-0:15
	Altitude	666km
	Inclination	98deg
	Re-visit	3 days
Launch	Vehicle	H-IIA
	Schedule	FY2008

H-IIA Launch Vehicle

1-5. Development & Operation Schedule

- GOSAT is currently under proto-flight model test.

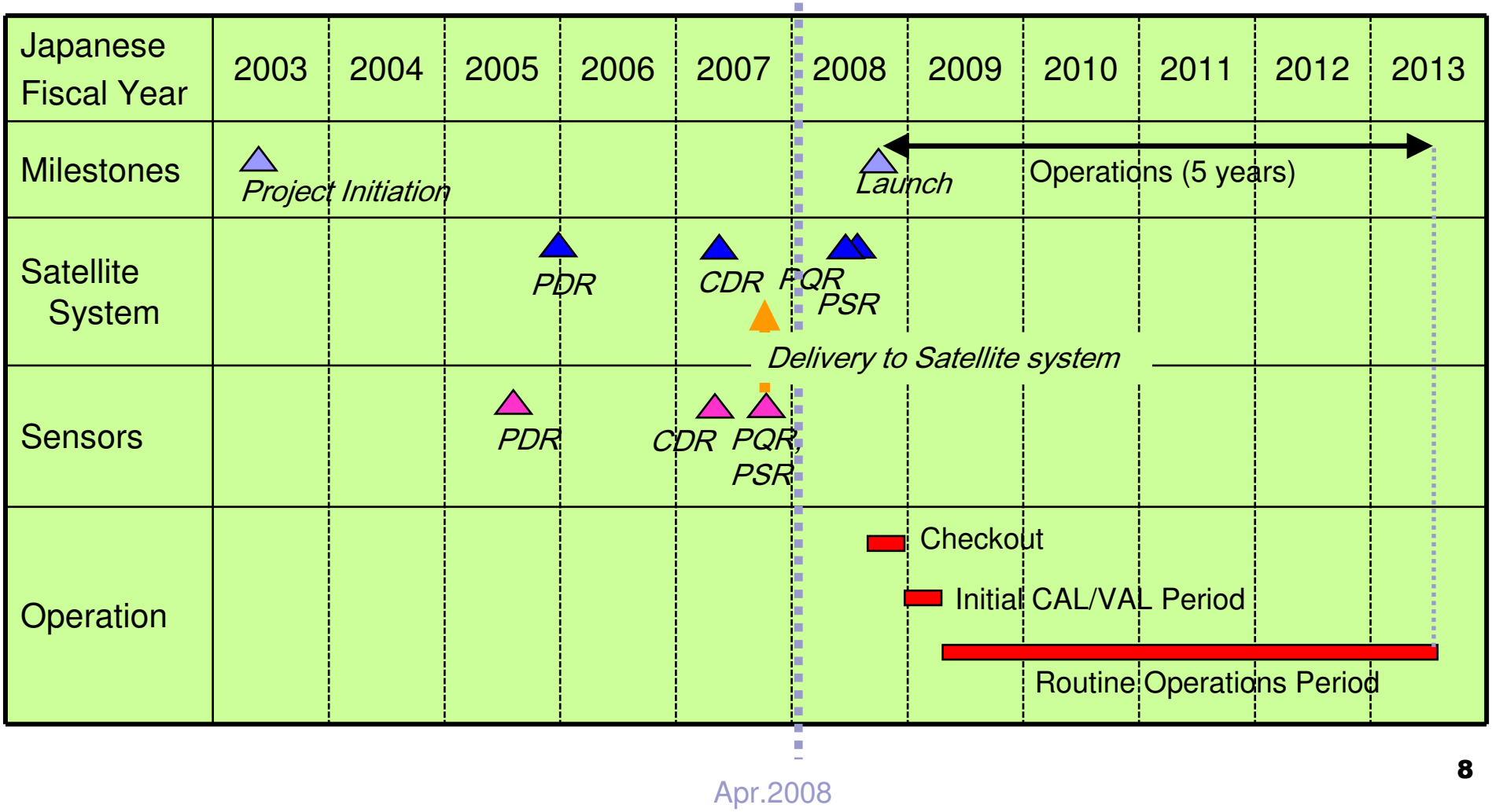

2. Enhancements of Robustness and Survivability
2.0 Lessons Learned

Introduction of past unfortunate satellite failures

MIDORI-II (ADEOS-II) Accident

- Power failure anomaly (October 25, 2003)
  - root cause: inadequate thermal design for power cables

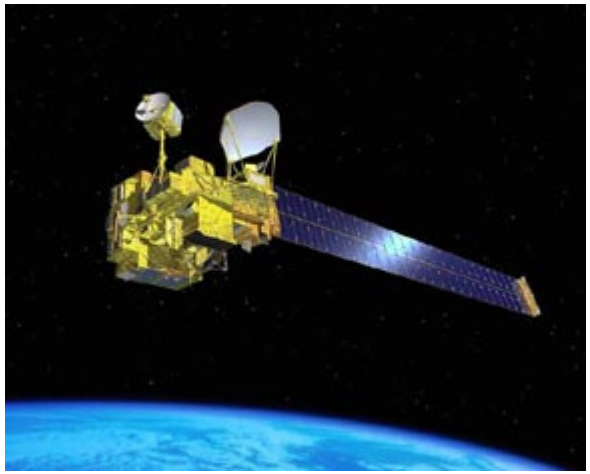

result: termination of the satellite full mission

2. Enhancements of Robustness and Survivability
2.1 Change in Design Approach

【In the Past】

- Satellite design focused on maximizing the probability of full mission success.

【GOSAT】

- In addition to conventional satellite design approach, GOSAT adopted further enhancement in robustness and focused on the probability of partial success.

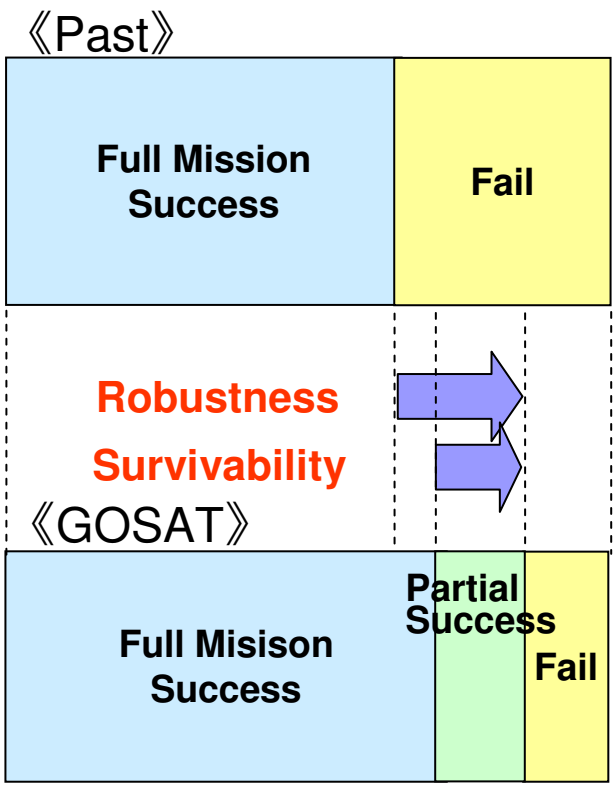

2.2 Enhancements of Robustness (Concept)

- General techniques for improving reliability.

Elimination of single point failure **(adoption of redundancy)**	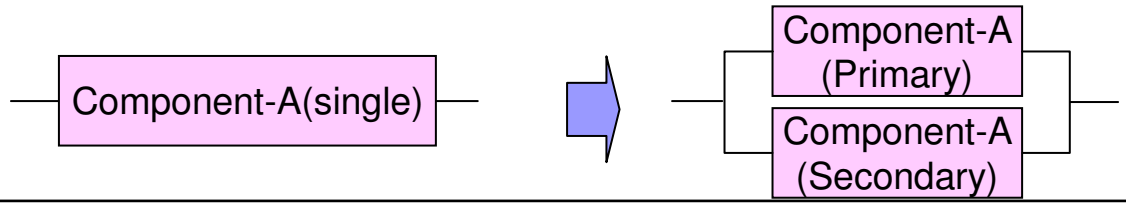
Functional redundancy	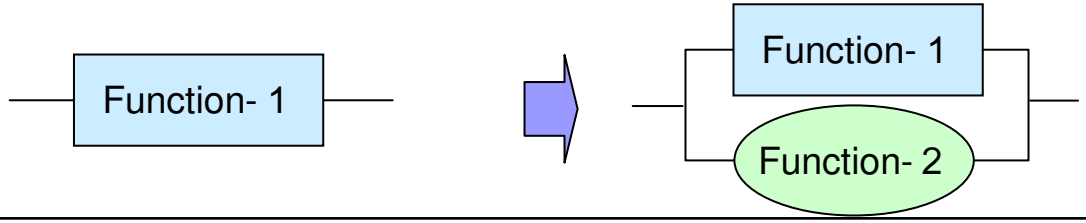
Cross-strap connection	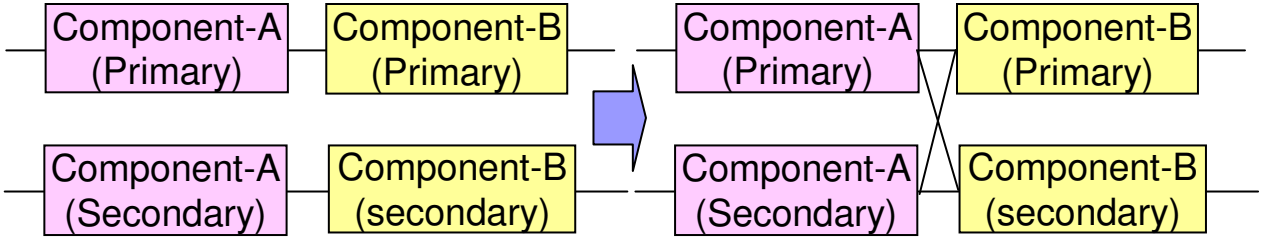

- Lessons learned from the past unfortunate satellite failures:
  --> Improving reliability of GOSAT components including ones that **conventionally considered reliable.**

2.3 Enhancements of Survivability (Concept)

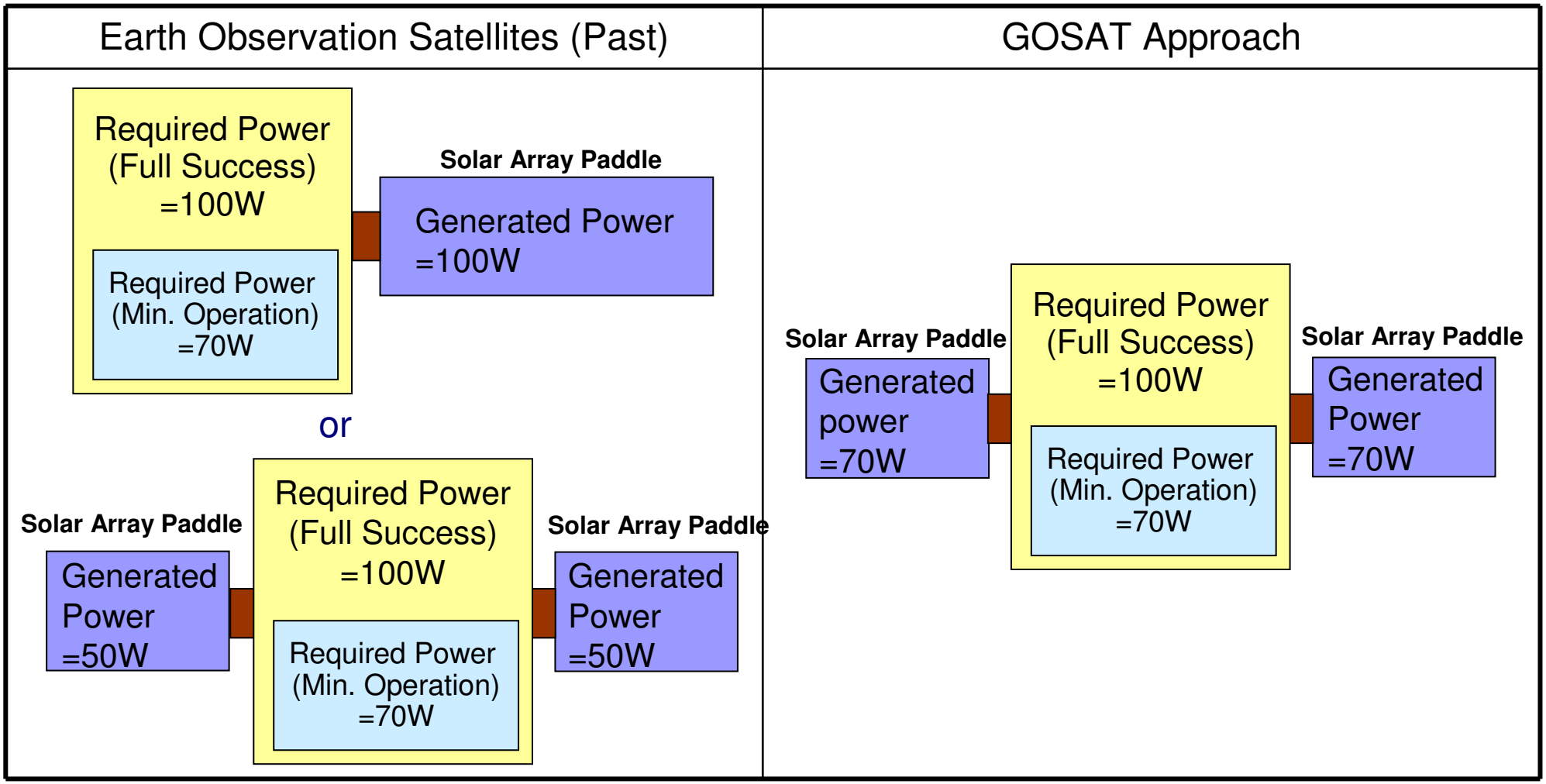

Failure of single solar array paddle:
--> Termination of minimum mission operation.

Failure of single solar array paddle:
--> Minimum mission operation.

2.4 Enhancements of Robustness for GOSAT

Enhancements	Approach
1. Complete elimination of single point failure (adoption of redundancy)	① Provided redundancy to the components including ones that conventionally considered highly reliable. ② Redundancy design to maintain the minimum mission operation in the failure event on the primary component due to designing or manufacturing anomaly. ie.) - Dual solar array paddles - Dual power system lines - Dual X-band antennas - Dual S-band antennas
2. Strategic adoption of functional redundancy	■ Functional redundancy to maintain the minimum mission operation during the simultaneous failure on both the primary and redundant components due to designing or manufacturing anomaly. ie.) - Additional bypass transmission route for mission sensor data - HK telemetry transmission from both X-band and S-band systems - Functional redundancy for attitude control components: --> Maintain attitude control using the earth sensor during the simultaneous failure on both primary and secondary Star-sensors. (Similar design features for Earth-sensor, Sun-sensor, GPSR, Reaction-wheel, Electromagnetic-torquer, and IMU.)
3. Adoption of cross-strap connection	■ GOSAT adopts cross-strap connection based on the former satellites' design concepts.

2.5 Enhancements of Survivability for GOSAT

Enhancements	Approach
1. Light Load Mode (LLM): **- *Early Trigger***	■ GOSAT is designed to shift to its safety mode called Light Load Mode (LLM) triggered not only by 'conventional way' of decrease in the battery power voltage but also triggered by anomalies in battery's depth of discharge (DOD) as well as in the power generation of the solar array paddles.
2. Maintaining Mission Operation (at 50% power): **- *Meeting success criteria***	■ Provided with dual solar array paddles, dual power system lines, and with its power-saving mode, GOSAT is capable of maintaining mission operation to achieve the minimum success criteria even in the failure event that the power is reduced by half using the remaining single system.
3. Super Light Load Mode (S-LLM)	① Super Light Load Mode (S-LLM) is designed and provided for the satellite to operated with the minimum power necessary for its survival. ② S-LLM provides means to survive for several hours while acquiring the data for failure-cause investigation even in the fatal system event. ③ Continuous operation of mission instruments is not guaranteed for this S-LLM.
4. Satellite Monitoring 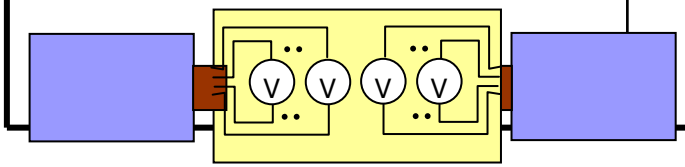 	■ Enhanced satellite monitoring function is provided to grasp the current status accurately and to respond to anomalies promptly. - Accommodation of 8-monitoring cameras - Monitoring of generated power status for each 48 power segments.

2.6 GOSAT Application (1) ... Robustness

Elimination of single point failure (X-band transmission subsystem):

- For many of the past satellite configuration, a X-band antenna, a X-band filter and a switch are equipped because these are highly reliable. But these components become single failure pointss.

- GOSAT is designed to provide all the components redundant for the X-band transmission subsystem including X-band antenna so as to continue the mission data transmission in the failure event on the primary or secondary component.

Earth Observation Satellites (Past)	GOSAT Approach
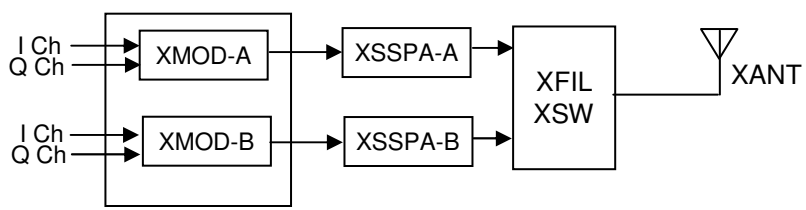 XMOD : X-band Modulator X-SSPA : X-band Solid State Power Amplifier X-ANT : X-band Antenna X-FIL / XSW : X-band filter / X-band switch	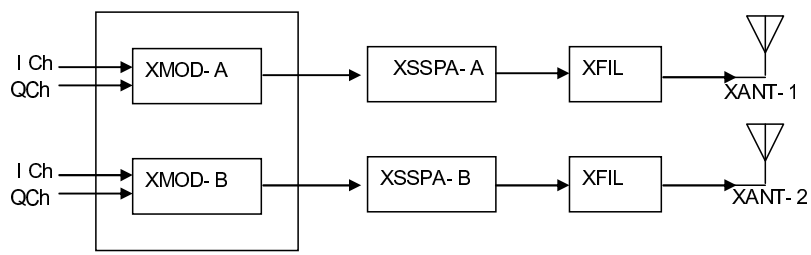

2.7 GOSAT Application (2) ... Robustness

Adoption of functional redundancy (Mission data transmission bypass):

- GOSAT is designed to maintain mission operation in the failure event on the newly developed mission data recorder.
- Mission data from the essential mission instrument 'TANSO-FTS' can be transmitted to the ground station through 'bypass' route in stead of the mission data recorder.

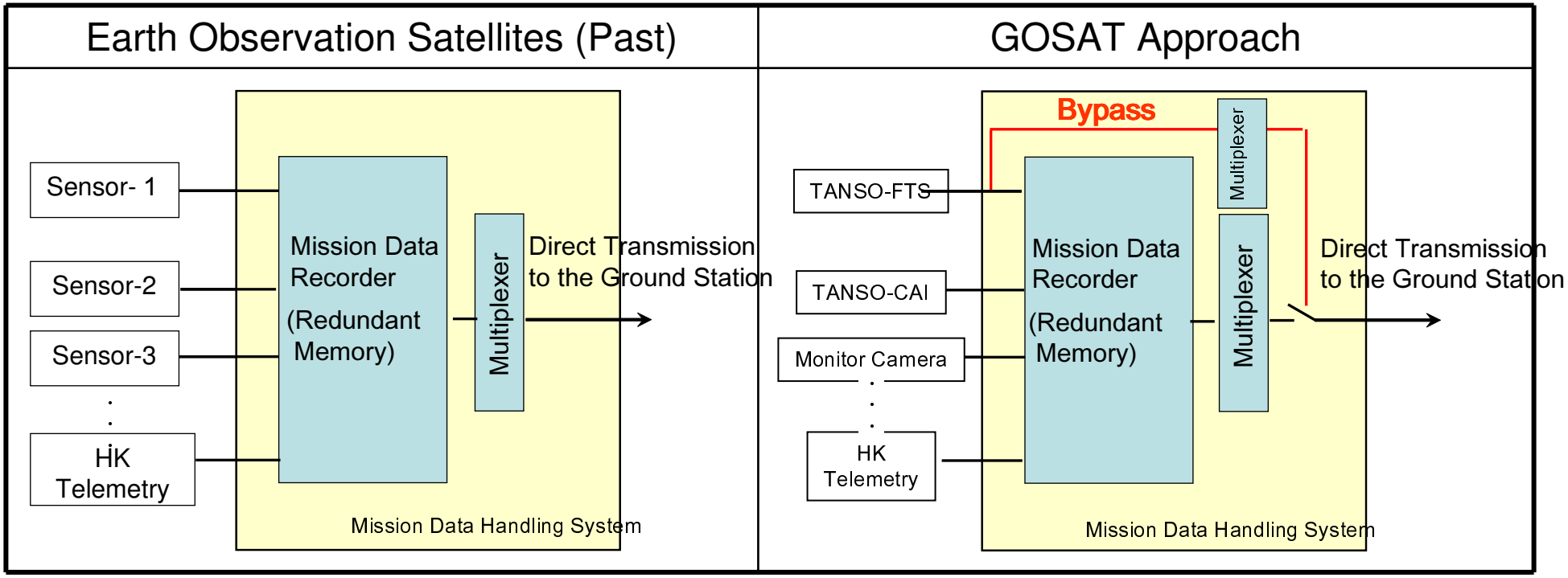

2.8 GOSAT Application (3) ... Survivability

Maintaining Mission Operation at 50% power

- Most of the past earth observation satellites have only a single solar array paddle which may lead to a mission lost in the failure event as it in reality happened on ADEOS, and ADEOS-II.
- GOSAT is designed to attach two solar array paddles with dual power system lines so as to deliver the electric power in the failure event on the primary or secondary component.
- And with its power-saving mode, GOSAT is capable of maintaining mission operation to achieve the minimum success criteria even in the failure event that the power is reduced by half using the remaining single system.

Earth Observation Satellites (Past)
(Single solar array paddle)

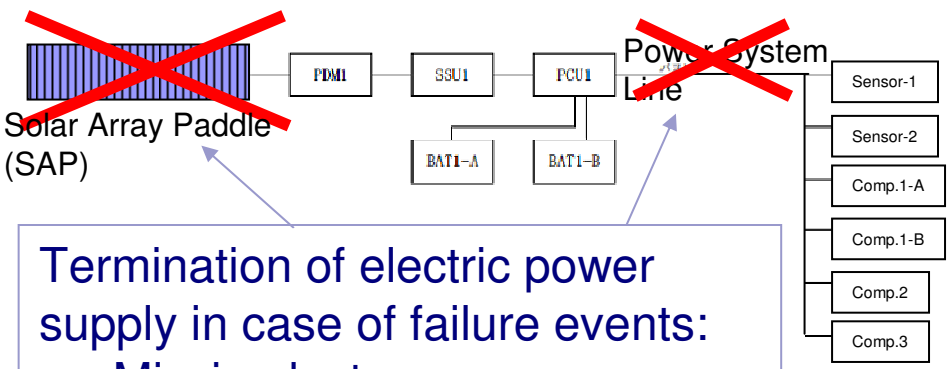

Termination of electric power supply in case of failure events:
--> Mission lost

GOSAT (Dual solar array paddles & Dual power system lines)

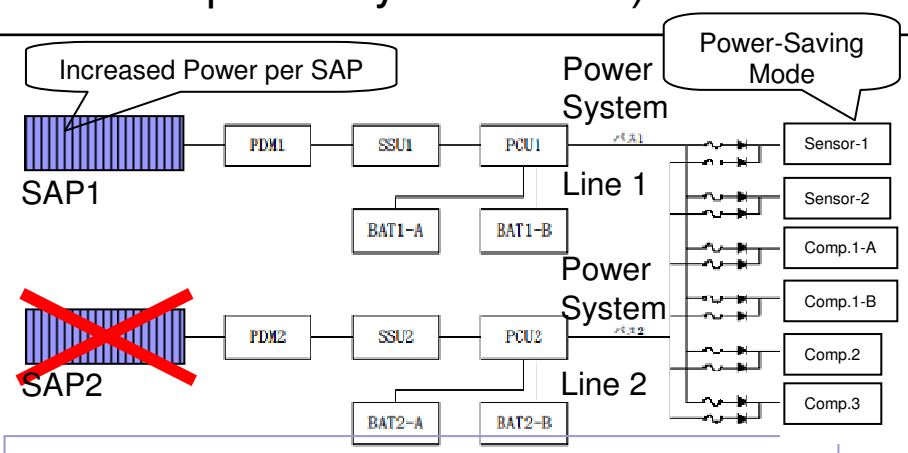

Failure of single power:
--> Minimum mission operation.

We conceives that GOSAT become

one of the most reliable satellites.

Thank you for listening.