TD9702A

International Space Station Familiarization

Mission Operations Directorate
Space Flight Training Division

July 31, 1998

National Aeronautics and
Space Administration

Lyndon B. Johnson Space Center
Houston, Texas

Foreword

The content of this document was provided by the Space Flight Training Division, Mission Operations Directorate (MOD), Lyndon B. Johnson Space Center (JSC), National Aeronautics and Space Administration (NASA). Technical documentation support was provided by Integrated Documentation Services (IDS), Hernandez Engineering, Inc. Any questions concerning this training manual or any recommendations should be directed to the training manual book manager, David Rose, at DT31.

This material is for training purposes only and should not be used as a source of operational data. All numerical data, displays, and checklist references are intended as examples. To determine any prerequisites before using this document, consult the applicable Certification Plan or Training Catalog.

Two format techniques are used in this document for emphasis. Text which is bolded and italicized is used to emphasize key concepts which are crucial to a sections' objective.

A Training Materials Evaluation form is included at the end of this document. Inputs on this sheet will be used to evaluate the lesson material. You do not need to sign the sheet.

International Space Station Familiarization
ISS FAM C 21109

July 31, 1998

REVISION LOG

REV LTR	CHNG NO	DESCRIPTION	DATE
		Basic	12/12/97
A		Revision	7/31/98

Technical Support

Subject Matter Experts

Section 1: Introduction to ISS, DT26/William O'Keefe

Section 2: Command and Data Handling, DT22/Rosalinde Henderson

Section 3: Electrical Power System Overview, DT47/Scott Simmons

Section 4: Communications and Tracking Overview, DT22/Dennis Gardner

Section 5: Thermal Control System Overview, DT47/Shawn Harrison

Section 6: Environmental Control and Life Support System Overview, DT47/Katie Martinez

Section 7: Guidance, Navigation, and Control Overview, DT22/Robert Frost

Section 8: Robotics Overview, DT44/Liz York

Section 9: Structures and Mechanisms Overview, DT44/Toni Clark

Section 10: Payloads Overview, DT42/Dwight Mosby

Section 11: Extravehicular Activity Overview, DF42/Sean Dougherty

Section 12: On-Orbit Maintenance Overview, DF53/Terence Williams

Section 13: Flight Crew Systems, DF54/David Pogue

Section 14: Crew Health Care System, SD2/Cheri Armstrong

Section 15: Operations and Planning, DT22/Rosalinde Henderson

Curriculum Developer

DT47/Tacy Smith

CONTENTS

Section			Page
1	**Introduction to the International Space Station**		**1-1**
	1.1	Objectives	1-1
	1.2	Purpose, Objectives, and Organization of the ISS	1-1
	1.3	ISS Elements	1-4
	1.3.1	Functional Cargo Block	1-6
	1.3.2	Node	1-6
	1.3.3	Service Module	1-6
	1.3.4	Soyuz	1-6
	1.3.5	Laboratory	1-6
	1.3.6	Multi-Purpose Logistics Module	1-7
	1.3.7	Joint Airlock	1-7
	1.3.8	Interim Control Module (not pictured)	1-7
	1.3.9	Docking Compartment	1-7
	1.3.10	Truss	1-7
	1.3.11	Science Power Platform	1-7
	1.3.12	Universal Docking Module	1-8
	1.3.13	Japanese Experiment Module	1-8
	1.3.14	Docking and Stowage Module	1-8
	1.3.15	Cupola	1-8
	1.3.16	Research Module	1-8
	1.3.17	Columbus Orbital Facility, Also Known as the Attached Pressurized Module	1-8
	1.3.18	Crew Rescue Vehicle, Also Known as the Crew Transfer Vehicle	1-8
	1.3.19	Centrifuge Accommodations Module	1-8
	1.3.20	Habitation Module	1-9
	1.3.21	Logistics Vehicles	1-9
	1.4	Operations Concepts	1-9
	1.5	Traffic Model	1-10
	1.6	Life During an Expedition	1-13
	1.6.1	Progress Docking	1-13
	1.6.2	Reboost	1-14
	1.6.3	Quiescent Operations	1-14
	1.6.4	Shuttle Docking/Mated Operations	1-14
	1.6.5	Crew Handover	1-15
	1.6.6	Deferred Assembly	1-15
	1.7	Summary	1-16

Section **Page**

2 Command and Data Handling Overview 2-1
2.1 Introduction 2-1
2.2 Objectives 2-2
2.3 Station Level Control Software (Modes) 2-3
2.4 Crew Interface Computers 2-4
2.5 Caution and Warning 2-6
2.5.1 C&W Function and Classes 2-6
2.5.2 C&W Indications 2-7
2.5.3 C&W Exchange Between Partner Modules and the Orbiter 2-11
2.5.4 Caution and Warning Assembly 2-11
2.6 Processing Computers and Data Buses 2-11
2.6.1 U.S. Command and Data Handling System 2-11
2.6.2 Russian Computer System 2-31
2.7 Multisegment Data Exchange 2-33
2.8 Summary 2-33

3 Electrical Power System Overview 3-1
3.1 Introduction 3-1
3.2 Objectives 3-1
3.3 USOS EPS Functional Design 3-2
3.4 USOS EPS Architecture 3-4
3.4.1 Primary Power System 3-5
3.4.2 Secondary Power System 3-10
3.4.3 Support Systems 3-12
3.4.4 USOS EPS Redundancy and System Protection 3-14
3.5 USOS EPS Interfaces 3-15
3.5.1 Power Interfaces 3-15
3.5.2 Systems Interfaces 3-15
3.6 Comparison between USOS and ROS EPS 3-16
3.7 Summary 3-18

4 Communication and Tracking Overview 4-1
4.1 Introduction 4-1
4.2 Objectives 4-1
4.3 Purpose 4-1
4.4 Overview 4-2
4.4.1 ISS Commanding 4-3
4.5 Internal Audio Subsystem 4-5
4.5.1 IAS Purpose 4-5
4.5.2 IAS Operations and Components 4-5
4.5.3 Russian Audio 4-8
4.6 S-Band Subsystem 4-9

Section **Page**

4.6.1 Purpose 4-9
4.6.2 S-Band Components and Operations 4-10
4.6.3 Software 4-12
4.6.4 Comparable Russian Segment Communication Systems 4-12
4.7 Ultrahigh Frequency Subsystem 4-13
4.7.1 Purpose 4-14
4.7.2 Ultrahigh Frequency Subsystem Operations and Components 4-14
4.7.3 UHF Software 4-16
4.7.4 Comparable Russian Segment Communication Systems 4-16
4.8 Video Distribution Subsystem 4-16
4.8.1 Video Distribution Subsystem Purpose 4-17
4.8.2 Video Distribution System Operations and Components 4-17
4.8.3 Russian Equivalent 4-20
4.9 Ku-Band Subsystem 4-21
4.9.1 Purpose 4-22
4.9.2 Operations and Components 4-22
4.9.3 Russian Equivalent 4-25
4.10 Summary 4-26

5 Thermal Control System Overview 5-1
5.1 Introduction 5-1
5.2 Objectives 5-1
5.3 TCS Architecture 5-1
5.4 USOS Passive Thermal Control System 5-2
5.4.1 Purpose 5-2
5.4.2 USOS PTCS Components 5-2
5.5 USOS Active Thermal Control System 5-6
5.5.1 Purpose 5-6
5.6 Lab Internal Thermal Control System 5-7
5.6.1 Purpose 5-7
5.6.2 Lab ITCS Components 5-11
5.6.3 Lab ITCS Interfaces 5-12
5.7 USOS Early External Thermal Control System 5-13
5.7.1 Purpose 5-13
5.7.2 USOS EETCS Components 5-17
5.7.3 USOS EETCS Interfaces 5-18
5.7.4 USOS External Thermal Control System 5-19
5.8 USOS TCS Software 5-20
5.8.1 Purpose 5-20
5.8.2 Architecture 5-20
5.9 ROS Thermal Control System 5-22
5.9.1 Purpose 5-22
5.9.2 FGB TCS Subsystems 5-22

Section **Page**

5.9.3 Comparison of USOS and ROS TCS 5-26
5.10 Flight-by-Flight Operations 5-27
5.11 TCS Summary 5-28
5.11.1 USOS PTCS Summary 5-28
5.11.2 USOS ATCS Summary 5-28
5.11.3 Lab ITCS Summary 5-28
5.11.4 USOS EETCS Summary 5-29
5.11.5 USOS TCS Software Summary 5-29
5.11.6 ROS TCS Summary 5-29

6 Environmental Control and Life Support System Overview 6-1
6.1 Introduction 6-1
6.2 Objectives 6-1
6.3 ECLSS Overview 6-1
6.3.1 Atmosphere Control and Supply 6-2
6.3.2 Atmosphere Revitalization 6-6
6.3.3 Temperature and Humidity Control 6-9
6.3.4 Fire Detection and Suppression 6-13
6.3.5 Water Recovery and Management 6-17
6.4 ECLSS Interfaces 6-21
6.5 ECLSS Milestones 6-22
6.5.1 Flight 1A/R - Functional Cargo Block 6-22
6.5.2 Flight 2A - Node 1 6-22
6.5.3 Flight 1R - Service Module 6-23
6.5.4 Flight 5A - Lab 6-23
6.5.5 Flight 7A - Airlock 6-23
6.6 Summary 6-23
6.6.1 ECLSS Purpose and Functions 6-23
6.6.2 Subsystem Names and Functions 6-23
6.6.3 Milestones 6-27

7 Guidance, Navigation, and Control Overview 7-1
7.1 Introduction 7-1
7.2 Objectives 7-1
7.3 U.S. Guidance, Navigation, and Control System Description 7-1
7.3.1 Guidance 7-1
7.3.2 Navigation 7-2
7.3.3 Control 7-4
7.3.4 Attitude Regimes and Operational Impacts 7-6
7.3.5 GNC Software Operational Modes 7-9
7.4 System Interfaces 7-13
7.4.1 Command and Data Handling 7-13
7.4.2 Electrical Power System Interfaces 7-14

Section **Page**

7.4.3 Thermal Control System 7-15
7.4.4 Station Robotics Interface 7-15
7.4.5 Communications and Tracking 7-15
7.4.6 Environmental Control and Life Support System 7-16
7.5 Summary 7-16

8 Robotics System Overview 8-1
8.1 Introduction 8-1
8.2 Objectives 8-1
8.3 Overview 8-1
8.4 Robotics Systems on the ISS 8-2
8.4.1 Mobile Servicing System 8-2
8.4.2 European Robotic Arm 8-11
8.4.3 Japanese Experiment Module Remote Manipulator System 8-12
8.5 System Relationships 8-15
8.6 Summary 8-16

9 Structures and Mechanisms Overview 9-1
9.1 Introduction 9-1
9.2 Objectives 9-1
9.3 Structures 9-1
9.3.1 Pressurized Elements 9-1
9.3.2 Truss Assemblies 9-5
9.4 Mechanisms 9-7
9.4.1 Common Berthing Mechanism/Manual Berthing Mechanism 9-8
9.4.2 Lab Cradle Assembly 9-9
9.4.3 Segment-to-Segment Attach System/Rocketdyne Truss Attach System 9-9
9.4.4 Common Attach System 9-10
9.4.5 Androgynous Peripheral Attach System 9-10
9.4.6 Probe/Drogue Docking System/Hybrid Docking System 9-11
9.5 Summary 9-12

10 Payloads Overview 10-1
10.1 Introduction 10-1
10.2 Objectives 10-1
10.3 ISS Types of Research 10-1
10.3.1 Life Sciences 10-2
10.3.2 Microgravity Sciences 10-2
10.3.3 Space Sciences 10-2
10.3.4 Earth Sciences 10-3
10.3.5 Commercial Product Development 10-3
10.3.6 Engineering Research and Technology 10-3
10.4 ISS Payloads Components 10-4
10.4.1 U.S. Laboratory 10-4

Section **Page**

10.4.2 Facility Class Payloads 10-5
10.4.3 Laboratory Support Equipment 10-13
10.4.4 Attached Payloads 10-15
10.4.5 Centrifuge Accommodation Module 10-16
10.4.6 Japanese Experiment Module 10-18
10.4.7 Columbus Orbital Facility 10-19
10.4.8 Russian Research Modules 10-20
10.5 Summary 10-20

11 Extravehicular Activity Overview 11-1
11.1 Introduction 11-1
11.1.1 People Involved in EVA 11-1
11.1.2 Types of EVAs 11-1
11.2 Objectives 11-2
11.3 Comparison of Spacesuits 11-2
11.3.1 Extravehicular Mobility Unit 11-3
11.3.2 The Orlan-M 11-4
11.3.3 EMU vs. Orlan 11-5
11.4 ISS Joint Airlock 11-7
11.4.1 Components of the Joint Airlock 11-8
11.4.2 ISS Joint Airlock System Interfaces 11-11
11.5 EVA Operations 11-13
11.5.1 Prep/Post Activities 11-13
11.5.2 Decompression Sickness Prevention 11-14
11.6 EVA Tools and Restraints 11-15
11.6.1 Mini-Workstation 11-15
11.6.2 Multi-Use Tether 11-16
11.6.3 Portable Work Platform 11-17
11.6.4 Crew and Equipment Translation Aid Cart 11-21
11.6.5 ORU Transfer Device (Crane) 11-22
11.6.6 Pistol Grip Tool (Power Tool) 11-23
11.6.7 Tool Box 11-24
11.7 Summary 11-25

12 On-Orbit Maintenance Overview 12-1
12.1 Introduction 12-1
12.2 Objectives 12-1
12.3 Maintenance Philosophy/Definitions 12-1
12.3.1 On-Orbit Maintenance Philosophy 12-2
12.3.2 Methods of On-Orbit Maintenance 12-3
12.3.3 Types of On-Orbit Maintenance 12-4
12.3.4 Levels of On-Orbit Maintenance 12-5
12.4 On-Orbit Maintenance Strategy 12-5

Section **Page**
12.4.1 NASA MWA/IVA Tools 12-6
12.4.2 Maintenance Logistics 12-12
12.4.3 Maintenance Procedures 12-14
12.4.4 Maintenance Training 12-15
12.5 Summary 12-16

13 Flight Crew Systems Overview 13-1
13.1 Introduction 13-1
13.2 Objectives 13-2
13.3 Restraints and Mobility Aids 13-2
13.3.1 Purpose 13-2
13.3.2 Hardware Components 13-2
13.3.3 Russian R&MAs 13-10
13.4 Stowage 13-10
13.4.1 Purpose 13-10
13.4.2 Hardware Components 13-11
13.4.3 Russian Stowage 13-12
13.5 Portable Emergency Provisions 13-12
13.5.1 Purpose 13-12
13.5.2 Hardware Components 13-12
13.5.3 Russian PEPs 13-13
13.6 Decals and Placards 13-14
13.6.1 Purpose 13-14
13.6.2 Hardware Components 13-14
13.7 Housekeeping and Trash Management 13-15
13.7.1 Purpose 13-15
13.7.2 Hardware Components 13-16
13.7.3 Russian Housekeeping Supplies 13-16
13.8 Closeouts 13-17
13.8.1 Purpose 13-17
13.8.2 Hardware Components 13-17
13.9 Lighting 13-17
13.9.1 Purpose 13-17
13.9.2 Hardware Components 13-18
13.10 Personal Hygiene 13-18
13.10.1 Purpose 13-18
13.10.2 Hardware Components 13-18
13.11 Operational and Personal Equipment 13-19
13.11.1 Purpose 13-19
13.11.2 Hardware Components 13-19
13.12 Wardroom and Galley and Food System 13-19
13.12.1 Purpose 13-19
13.12.2 Hardware Components 13-19
Section **Page**

13.13 Crew Privacy Accommodations 13-20
13.13.1 Purpose 13-20
13.13.2 Hardware Components 13-20
13.14 Summary 13-21

14 Crew Health Care System 14-1
14.1 Introduction 14-1
14.2 Objectives 14-1
14.3 Purpose 14-1
14.3.1 CHeCS Architecture 14-1
14.3.2 CHeCS Subsystems 14-2
14.4 Countermeasures System 14-2
14.4.1 Components 14-2
14.5 Environmental Health System 14-5
14.5.1 Components 14-5
14.6 Health Maintenance System 14-13
14.6.1 Components 14-13
14.7 Summary 14-20
14.8 CHeCS Launch Summary 14-21

15 ISS Operations and Planning 15-1
15.1 Introduction 15-1
15.2 Objectives 15-1
15.3 Introduction to Planning Time Frames and Products 15-1
15.3.1 ISS Planning Time Frames 15-1
15.3.2 Complexity of the Planning Process 15-2
15.3.3 Increment Planning Process Template 15-3
15.3.4 Strategic Planning 15-3
15.3.5 Tactical Planning 15-4
15.3.6 Pre-Increment Planning 15-5
15.3.7 Increment Execution 15-8
15.4 Planning and Analysis Tools 15-9
15.4.1 The Integrated Planning System 15-9
15.5 Inventory Management 15-10
15.6 Scenario 15-12
15.7 Summary 15-13

APPENDIX

A Acronyms A-1
B Answers B-1
C ISS Reference Frames C-1
D Technical Summary Sheets D-1
E Assembly Sequence Rev. D E-1
F Station Mission Controller Front Room Positions F-1

FIGURES

Figure		Page
1-1	International Space Station at assembly complete	1-5
1-2	Generic expedition 1 travel model	1-12
2-1	Station computer systems at assembly complete	2-1
2-2	Graphical display	2-6
2-3	U.S. segment caution and warning panel	2-8
2-4	Russian segment caution and warning panel	2-8
2-5	C&W header and ISS home page	2-9
2-6	Module locations of C&W panels, ports for C&W data and ATU/ACUs	2-10
2-7	Conceptual view of CDH architecture	2-12
2-8	Functional drawing of CDH at 5A	2-15
2-9	Typical CDH MDM	2-18
2-10	Spatial CDH Graphic	2-23
2-11	Bus versus channel	2-25
2-12	Sample Command Window	2-28
2-13	Functional drawing of OCCS	2-32
3-1	Analogy between municipal electric utilities and ISS EPS	3-2
3-2	ISS at assembly complete	3-3
3-3	ISS at 8A	3-4
3-4	USOS EPS schematic	3-5
3-5	USOS EPS power channel	3-6
3-6	Integrated equipment assembly	3-7
3-7	Partially deployed solar array wing	3-8
3-8	USOS secondary power system	3-11
3-9	Structure of EPS command and control tiered architecture	3-13
3-10	FGB electrical system drawing	3-17
3-11	ISS at 8A	3-18
4-1	C&T System overview	4-2
4-2	USOS command paths	4-3
4-3	Russian Segment command path	4-4
4-4	Internal Audio Subsystem overview	4-6
4-5	Audio terminal unit	4-7
4-6	S-band overview	4-10
4-7	UHF Subsystem overview	4-14
4-8	Video Distribution Subsystem overview	4-18
4-9	Ku-Band Subsystem	4-24

Figure		Page
5-1	Space Station TCS architecture	5-1
5-2	MLI design	5-3
5-3	Typical heater control	5-5
5-4	USOS ATCS architecture	5-6
5-5	Lab ITCS	5-9
5-6	Early External Thermal Control System Level 1B Overview	5-15
5-7	EETCS radiators	5-18
5-8	USOS TCS software architecture (Flights 5-A through 12-A)	5-21
5-9	Thermal Control System Level 1B Functional Cargo Block	5-23
6-1	ECLSS Subsystem interfaces at Flight 8A	6-2
6-2	ECLSS Functional Overview Atmosphere Control and Supply Subsystem	6-3
6-3	ECLSS Functional Overview Atmosphere Revitalization Subsystem	6-7
6-4	ECLSS Functional OverviewTemperature and Humidity Control Subsystem	6-11
6-5	ECLSS Functional Overview Fire Detection and Suppression Subsystem	6-15
6-6	ECLSS Functional Overview Water Recovery and Management Subsystem	6-19
6-7	ECLSS interfaces at Flight 8A	6-22
6-8	ECLSS functional overview	6-25
7-1	Interferometry	7-3
7-2	Major Station Torques	7-7
7-3	8A GNC ISS schematic	7-11
7-4	GNC/CDH interface	7-13
7-5	GNC/EPS interface	7-14
8-1	ISS locations where the Robotics Systems are used	8-2
8-2	Overview of Mobile Servicing System	8-3
8-3	Space Station Remote Manipulator System	8-4
8-4	Latching End Effector	8-5
8-5	Power and Data Grapple Fixture	8-5
8-6	Robotic Workstation external components	8-7
8-7	Mobile Transporter	8-8
8-8	Mobile Remote Servicer Base System	8-9
8-9	Special Purpose Dexterous Manipulator	8-10
8-10	European Robotic Arm	8-11
8-11	Basic End Effector (left); BEE latch mechanism and European Robotic Arm basepoint (right)	8-11
8-12	EVA Man-Machine Interface and IVA Man-Machine Interface	8-12

Figure		Page

8-13	Overview of the Japanese Experiment Module Remote Manipulator System	8-13
8-14	Japanese Experiment Module Remote Manipulator System Main Arm, end effector and grapple fixture	8-14
8-15	Small Fine Arm	8-14
8-16	Japanese Experiment Module Remote Manipulator System Console (located in JEM Pressurized Module)	8-15
9-1	Primary structures on a typical module	9-2
9-2	The 8A configuration of ISS	9-3
9-3	External secondary structures	9-4
9-4	Comparison of U.S. and Russian MM/OD systems	9-5
9-5	Integrated truss segments	9-6
9-6	Science Power Platform	9-7
9-7	Common Berthing Mechanism	9-8
9-8	Lab Cradle Assembly active half	9-9
9-9	Segment-to-Segment Attach System	9-9
9-10	Common Attach System	9-10
9-11	Androgynous Peripheral Attach System	9-11
9-12	Probe/drogue docking system	9-11
10-1	U.S. Laboratory module	10-4
10-2	U.S. Lab topology	10-5
10-3	Human Research Facility Rack 1	10-6
10-4	Early design for Materials Science Research Facility design	10-8
10-5	Microgravity Science Glovebox	10-9
10-6	Fluids and Combustion Facility	10-10
10-7	Biotechnology Facility	10-11
10-8	Window Observational Research Facility conceptual design	10-12
10-9	X-ray Crystallography Facility	10-13
10-10	Refrigerator/freezer	10-14
10-11	Attached payload sites	10-15
10-12	Centrifuge Accommodation Module	10-16
10-13	Space Station Biological Research Project	10-17
10-14	Japanese Experiment Module	10-18
10-15	Columbus Orbital Facility	10-19
10-16	Russian Research Modules	10-20
11-1	Extravehicular mobility unit	11-3
11-2	Orlan-M	11-4
11-3	ISS at 8A	11-7
11-4	Crew lock and equipment lock	11-8
11-5	Crew lock	11-9

Figure		Page
11-6	Equipment lock	11-10
11-7	Joint airlock system interfaces	11-12
11-8	Mini-Workstation	11-15
11-9	Multi-Use Tether	11-16
11-10	Portable Work Platform	11-17
11-11	Articulating Portable Foot Restraint	11-18
11-12	Temporary Equipment Restraint Aid	11-19
11-13	Tool stanchion	11-20
11-14	Crew and Equipment Translation Aid Cart	11-21
11-15	ORU transfer device (Crane)	11-22
11-16	Pistol grip tool (power tool)	11-23
11-17	Tool box	11-24
12-1	Maintenance work area (top view)	12-6
12-2	MWA containment system	12-7
12-3	Scopemeter	12-9
12-4	Logic analyzer	12-10
12-5	Function/sweep generator	12-11
12-6	Diagnostic caddy	12-11
12-7	DC power supply	12-12
12-8	Power strip	12-12
13-1	Adjustable tether	13-3
13-2	Bungees	13-3
13-3	Seat track details	13-4
13-4	Short seat track button	13-4
13-5	Node FWD endcone/alcove area	13-5
13-6	STEA attached to seat track	13-5
13-7	Handrail equipment anchor	13-6
13-8	HEA attached to handrail	13-6
13-9	Long duration foot restraint	13-7
13-10	SDFR attached to handrails	13-8
13-11	Handrails	13-9
13-12	Rack handle assembly	13-9
13-13	Restraints and mobility aids use	13-10
13-14	Stowage rack	13-11
13-15	Portable emergency provisions	13-13
13-16	Stowage tray card	13-14
13-17	Hatch decal	13-15
13-18	Wet/dry vacuum cleaner	13-16
13-19	Closeout panels (typical)	13-17
13-20	General luminaire assembly	13-18

Figure		Page
14-1	Treadmill with vibration isolation system	14-3
14-2	Heart rate monitor	14-4
14-3	Space shuttle cycle ergometer	14-5
14-4	Total organic carbon analyzer	14-6
14-5	Water microbiology kit	14-7
14-6	WMK syringe assembly	14-7
14-7	Surface sampler kit	14-8
14-8	Microbial air sampler	14-8
14-9	Tissue equivalent proportional counter	14-9
14-10	Intravehicular-charged particle directional spectrometer	14-10
14-11	Extravehicular-charged particle directional spectrometer	14-10
14-12	Compound-specific analyzer - combustion products	14-11
14-13	CSA-CP with pump	14-12
14-14	Compound-specific analyzer - hydrazine	14-13
14-15	Ambulatory medical pack	14-14
14-16	Crew contaminant protection kit	14-15
14-17	Advanced life support pack	14-16
14-18	Crew medical restraint system	14-17
14-19	Defibrillator	14-18
14-20	Respiratory support pack	14-19
15-1	Planning Process Template	15-3
15-2	Overview of OOS cycle	15-6
15-3	Weekly STP Development	15-8
15-4	Relationship between the OOS, STP, and OSTP	15-9

TABLES

Table		Page
1-1	Training phases	1-10
2-1	Station modes	2-3
2-2	Crew interface computers at 8A	2-5
2-3	Caution and warning classes	2-7
2-4	Key terms from MIL STD 1553B protocol	2-27
3-1	USOS EPS components at flight 8A	3-19
4-1	Internal audio subsystem assembly sequence	4-9
4-2	S-band assembly	4-13
4-3	UHF subsystem	4-16
4-4	Video distribution subsystem assembly sequence	4-21
4-5	Ku-band Subsystem assembly sequence	4-26

Table		Page
5-1	Typical surface finish properties	5-4
5-2	EETCS/ETCS comparison	5-19
5-3	TCS comparison	5-28
5-4	TCS buildup	5-29
8-1	Overview of ISS Robotics Systems	8-16
8-2	Summary of Robotics Systems and Subsystems	8-16
9-1	Mechanisms and their functions	9-12
11-1	EVA flight rules	11-1
11-2	EMU and Orlan-M comparison	11-5
11-3	Prep/Post EVA procedures	11-13
12-1	On-orbit maintenance levels	12-5
14-1	Volatile organic analyzer target compounds	14-12

Section 1
Introduction to the International Space Station

This section introduces the overall purpose, objectives, organization, and elements of the International Space Station (ISS). The operational concepts that define crew and controller roles and responsibilities are also addressed, in addition to the "traffic model" or when Earth-to-Orbit Vehicles (ETOVs) such as Shuttle, Progress and Soyuz can rendezvous with the Station. Details regarding activities which occur during and between ETOV visits are also included.

1.1 Objectives

After completing this section, you should be able to:

- List the purpose and objectives of the ISS
- Describe the purpose of each major ISS element/module
- Describe the typical operations performed during the major mission activities of ISS.

1.2 Purpose, Objectives, and Organization of the ISS

The purpose of the ISS is to provide an "Earth orbiting facility that houses experiment payloads, distributes resource utilities, and supports permanent human habitation for conducting research and science experiments in a microgravity environment." (ISSA IDR no. 1, Reference Guide, March 29, 1995)

This overall purpose leads directly into the following specific objectives of the ISS program:

- Develop a world-class orbiting laboratory for conducting high-value scientific research
- Provide access to microgravity resources as early as possible in the assembly sequence
- Develop ability to live and work in space for extended periods
- Develop effective international cooperation
- Provide a testbed for developing 21st Century technology.

To accomplish these objectives, the National Aeronautics and Space Administration (NASA) has joined with four other space agencies and their major contractors. Besides NASA, with its prime contractor Boeing, the ISS Program consists of:

- Russian Space Agency (RSA), with its contractors Rocket Space Corporation-Energia (RSC-E) and Khrunichev Space Center (KhSC)
- Canadian Space Agency (CSA), with its contractor Spar Aerospace

- National Space Development Agency of Japan (NASDA), with its contractor Mitsubishi Heavy Industries
- European Space Agency (ESA), with its contractor Deutsche Aerospace.

The NASA/Boeing team is further broken down. Besides the Program Office, there are four Product Groups (PGs), each of which has its own responsibilities for specific module or hardware development. These groups and their responsibilities include:

- PG 1: McDonnell Douglas - Integrated Truss, Distributed Avionics, Node Integration
- PG 2: Rocketdyne - Solar Arrays, Power Management, and Distribution
- PG 3: Boeing - Habitation (Hab) and Laboratory (Lab) modules, Node structures, Life Support System
- PG 4: Italian Space Agency (ASI) and its contractor, Allenia - Mini-Pressurized Logistics Module (MPLM). (Note: ASI is considered a "contractor" to NASA due to the contractual requirements for MPLM development. Basically, NASA is buying the MPLM from ASI.).

To integrate all these organizations, the following various levels of agreements have been developed:

- Government-to-Government agreements, called Inter-Government Agreements (IGAs). These commit the various countries and national space agencies to ISS.
- Agency and Program-level agreements, usually called Memorandums of Understanding (MOUs). These define the roles and responsibilities of the various national space agencies. The most important operational MOU is the Concept of Operations and Utilization (COU). This defines how the Station will be operated and used.
- The COU itself is further developed in the Station Program Implementation Plan (SPIP), which defines how the program will implement the COU. The SPIP has 10 volumes.
  - Vol. I: The high-level statement of the implementation plan
  - Vol. II: Program Planning and Manifesting
  - Vol. III: Cargo Integration
  - Vol. IV: Payload Integration
  - Vol. V: Logistics and Maintenance
  - Vol. VI: Launch Site Processing
  - Vol. VII: Training
  - Vol. VIII: Increment Execution Preparation
  - Vol. IX: Real-Time Operations
  - Vol. X: Sustaining Engineering

Of most interest to the Mission Operations Directorate (MOD) is Vol. IX, which defines how the various partner space agency's control and payload centers will interface and each center's roles and responsibilities. Each partner has development and operational responsibilities for the elements and transportation systems that it provides. NASA is the lead integrator for the program. The control and payload centers are as follows:

- NASA
  - Mission Control Center-Houston (MCC-H)
  - Payload Operations Integration Center (POIC) in Huntsville, Alabama
  - MPLM Technical Support Center in Turin, Italy
- RSA
  - Mission Control Center-Moscow (MCC-M)
- CSA
  - Space Operations Support Center in St. Hubert, Quebec
- NASDA
  - Space Station Integration and Promotion Center in Tsukuba
- ESA
  - Attached Pressurized Module Control Center in Oberfafenhoffen, Germany

Specifically, MCC-H has the overall authority for Station operations for all phases of the program. MCC-M and MCC-H provide vehicle control functions for their respective segments, and each has the capability to back up the other control center for critical functions, if required. Before Flight 5A, MCC-M is responsible for execution leadership. After Flight 5A, MCC-H is responsible for leading the execution of multisegment procedures (procedures that require interfaces or interaction between the U.S. and Russian Orbital Segments (ROSs)) and overall execution leadership. The Mission Management Team, with representatives from each partner, is responsible for program oversight and provides program direction to the real-time execute teams.

All of these IGAs, MOUs, SPIP volumes and control centers are required to support a vehicle that, at Assembly Complete, will be approximately three to four times larger than the present Mir. The ISS will have:

- A pressurized volume of 1200 cubic meters
- Mass of 419,000 kilograms
- Maximum power output of 110 kilowatts (kW), with a payload average power allocation of 30 kW
- A structure that measures 108.4 meters (truss length) by 74 meters (modules length)

- An orbital altitude of 370-460 km
- An orbital inclination of 51.6°
- A crew of six (three until Assembly Complete).

Building the ISS requires more than 50 flights over a 4.5- to 5-year period. The Shuttle flies 31 of the flights. Of these flights, 24 are dedicated to assembly tasks (referred to as the "A" flights; e.g., Flight 5A or the fifth U.S. Shuttle assembly flight), and 7 are utilization flights dedicated to bringing up the science experiments (referred to as the "UF" flights; e.g., UF 2). Approximately 11 Soyuz flights will be required to maintain crew escape capability. Most will be used for crew rotation (bringing up a "new" crew and/or returning the "old" crew). Another 10 unmanned Russian assembly flights (generally launched on a Proton and referred to as the "R" flights; e.g., Flight 1R) will be required to bring up the Russian Segment modules. This 50+ number does not include the resupply/logistics flights. Approximately 30 Progress M1 flights are required by Assembly Complete to provide all the logistics. The Progress spacecraft is also used to provide the propulsive force for the reboosts. (A reboost is a posigrade propulsive burn to raise the Station orbit to compensate for orbit altitude decay.)

1.3 ISS Elements

The 50+ flights bring up and assemble the various modules/elements of the ISS. The following paragraphs address the modules/elements in the approximate order that they are assembled (per Assembly Sequence, Rev. D). Figure 1-1 illustrates the ISS at Assembly Complete. To view this picture on the World Wide Web, visit http://station.nasa.gov/gallery/component_view.pdf.

International SPACE STATION

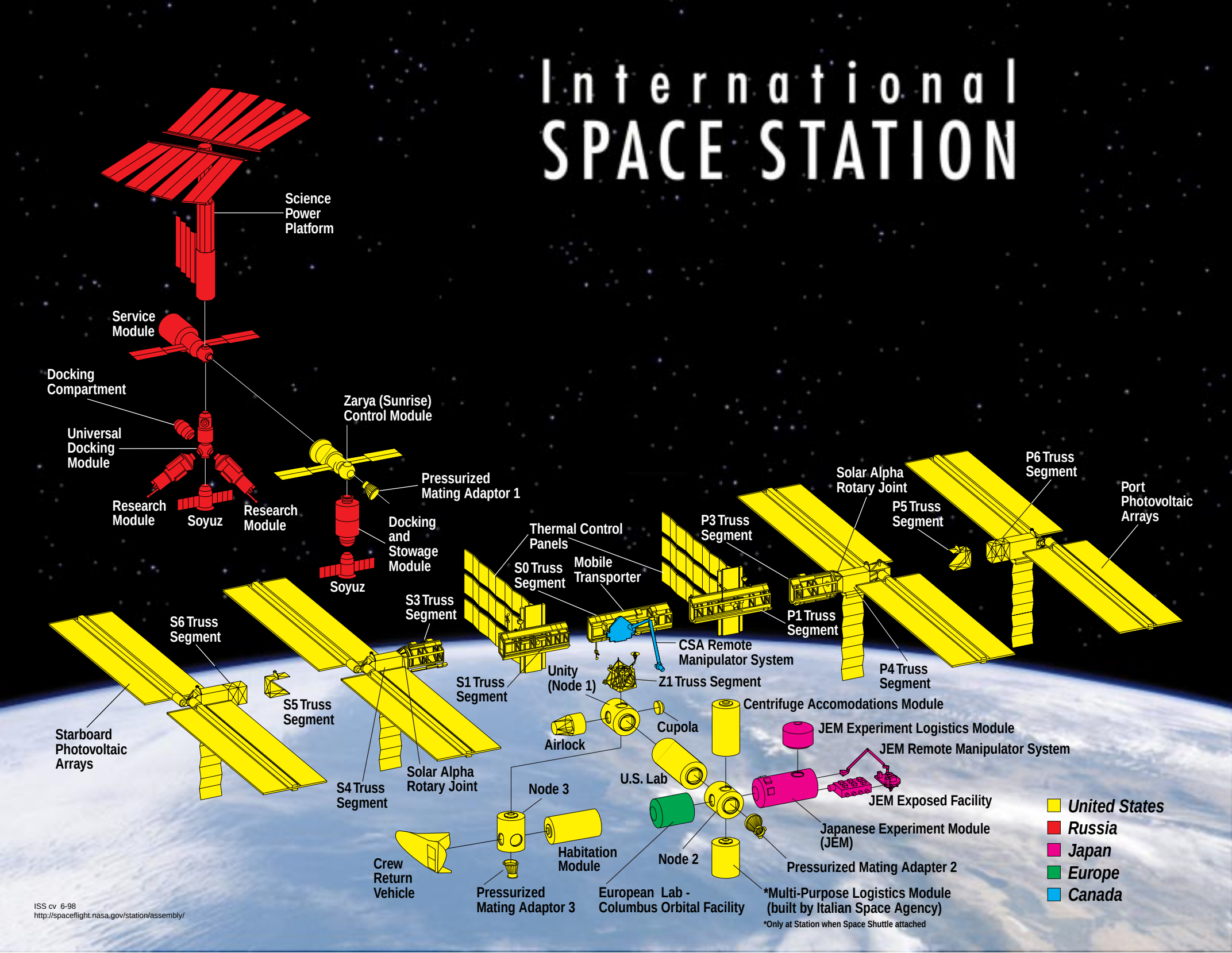

1.3.1 Functional Cargo Block

The Functional Cargo Block (FGB) is the first element launched and therefore its launch is often referred to as FEL (First Element Launch). The FGB is built by KhSC and launched and controlled by MCC-M. It is funded, however, by NASA. FGB is a self-contained vehicle capable of independent unmanned orbital operations. The FGB serves as the Station "building block" in that it provides all the critical system functions until the Service Module (SM) is activated. After the SM is activated, the FGB is basically powered down and serves only as a backup and propellant storage tank for the SM. It continues to provide power to the U.S. elements until Flight 4A.

1.3.2 Node

The Node is a U.S. element that provides six docking ports (four radial and two axial) for the attachment of other modules. It also provides external attachment points for the truss. Finally, the Node provides internal storage and pressurized access between modules. There are three Nodes.

1.3.3 Service Module

The Service Module (SM), similar in layout to the core module of Russia's Mir space station, provides the early Station living quarters, life support system, communication system, electrical power distribution, data processing system, flight control system, and propulsion system. Although many of these systems will be supplemented or replaced by later U.S. Station components, the SM always remains the structural and functional center of the ROS. Living accommodations on the Service Module include personal sleeping quarters for the crew; a toilet and hygiene facilities; a galley with a refrigerator/freezer; and a table for securing meals while eating. Spacewalks using Russian Orlan-M spacesuits can be performed from the SM by using the Transfer Compartment as an airlock.

1.3.4 Soyuz

Besides being an Earth-to-Orbit Vehicle (ETOV) used for crew rotations, Soyuz is the Russian element that provides the crew emergency return ("lifeboat") capability, at least through Assembly Complete. As such, there is always a Soyuz docked to the Station whenever the Station crew is onboard. Therefore, launch of the Soyuz marks the beginning of permanent human presence of a three-person crew. At least every 6 months, the docked Soyuz is replaced with a "fresh" Soyuz. After Assembly Complete, the Soyuz may be replaced by the Crew Rescue Vehicle (CRV).

1.3.5 Laboratory

The Lab is a U.S. element that provides equipment for research and technology development. It also houses all the necessary systems to support a laboratory environment and control the U.S. Segment.

1.3.6 Multi-Purpose Logistics Module

Because the Multi-Purpose Logistics Module (MPLM) is provided by ASI under contract to NASA, it is considered a U.S. element. It allows transfer of pressurized cargo and payloads. It is launched on the Shuttle and berthed to the Node, where supplies are offloaded and finished experiments are loaded. The MPLM is then reberthed in the Shuttle for return to Earth. The MPLM will be used numerous times during the lifetime of the Station.

1.3.7 Joint Airlock

The Joint Airlock is a U.S. element that provides Station-based Extravehicular Activity (EVA) capability using either a U.S. Extravehicular Mobility Unit (EMU) or Russian Orlon EVA suits.

1.3.8 Interim Control Module (not pictured)

The Interim Control Module (ICM) is a U.S. module built by the Naval Research Laboratory capable of providing the guidance, navigation, control, and propulsion functions for the ISS. Whether the ICM is used and what exact functions it provides is dependent on the timing and capabilities of the SM. The ICM is not planned to be a permanent feature of the ISS.

1.3.9 Docking Compartment

There are two Russian element Docking Compartments (DCs) used during the assembly sequence to provide egress/ingress capability for Russian-based EVAs and additional docking ports.

1.3.10 Truss

Built over numerous flights, the truss is a U.S. element that provides the ISS “backbone” and attachment points for modules, payloads, and systems equipment. It also houses umbilicals, radiators, external payloads, and batteries. The truss is based on the Freedom pre-integrated truss design. The truss segments are labeled by whether they are on the starboard (right) or port (left) side of the Station and its location. An example is the P6 truss is located on the outermost port side. Two exceptions to this labeling scheme are truss S0, which is actually the center truss segment, and during early assembly, the P6 truss segment, with its PVA, is actually mounted on the Z1 truss on the Lab. The Z1 truss itself is an anomaly in that it is not part of the main truss but a truss segment needed under the ISS design until the main truss is built.

1.3.11 Science Power Platform

The Science Power Platform (SPP) is a Russian element that is brought up by the Shuttle to provide additional power and roll axis attitude control capability.

1.3.12 Universal Docking Module

The Universal Docking Module (UDM) is a Russian element that provides a five-port docking node for additional Russian modules and vehicles. It performs the same function as the U.S. Nodes.

1.3.13 Japanese Experiment Module

The Japanese Experiment Module (JEM) is a Japanese element that provides laboratory facilities for Japanese material processing and life science research. It also contains an external platform, airlock, and robotic manipulator for in-space ("exposed") experiments and a separate logistics module to transport JEM experiments.

1.3.14 Docking and Stowage Module

The Docking and Stowage Module (DSM) is a Russian element that provides facilities for stowage and additional docking ports.

1.3.15 Cupola

The Cupola is a U.S. element that provides direct viewing for robotic operations and Shuttle payload bay viewing.

1.3.16 Research Module

The Research Module (RM) is a Russian element that provides facilities for the Russian experiments and research. It is analogous to the U.S. Lab. There are two RMs.

1.3.17 Columbus Orbital Facility, Also Known as the Attached Pressurized Module

The Columbus Orbital Facility (COF) is an European Space Agency (ESA) element that provides facilities for the ESA experiments and research. It is analogous to the U.S. Lab.

1.3.18 Crew Rescue Vehicle, Also Known as the Crew Transfer Vehicle

Similar to the Soyuz, the Crew Rescue Vehicle (CRV) provides the emergency crew return ("lifeboat") function. Although the exact design is still TBD, it will be based on NASA's X-38. The X-38 will have a six-person return capability, and therefore its presence (or the presence of a second Soyuz) is a requirement for going to a six-person crew. The X-38 will have a fully automated deorbit/landing mode, although the crew can manually override landing site selections.

1.3.19 Centrifuge Accommodations Module

The Centrifuge Accommodation Module (CAM) is a U.S. element that provides centrifuge facilities for science and research. It also houses additional payload racks.

1.3.20 Habitation Module

The Hab is a U.S. element that provides six-person habitation facilities, such as personal hygiene (better waste management, full body shower), crew health care, and galley facilities (wardroom with eating facilities, oven, drink dispenser, freezer/refrigerator).

1.3.21 Logistics Vehicles

Logistics flights are required throughout the life of the ISS and will be accomplished using a variety of vehicles. The Shuttle will be used to bring water, and pressurized cargo. When the Mini-Pressurized Logistics Module (MPLM) is used, the Shuttle can bring nearly 9 metric tons of pressurized cargo to ISS. The Shuttle is also the only means for returning items intact from ISS.

The Progress M1 is provided by RSA and used to accomplish three primary tasks: orbital reboost, attitude control fuel resupply, and pressurized cargo resupply. It will be launched on a Soyuz booster. Fuel that is not required for a reboost is transferred to the Functional Cargo Block (FGB) and Service Module (SM) tanks to be used for propulsive attitude control. Pressurized cargo includes oxygen, nitrogen, food, clothing, personal articles, and water. The Progress is filled with trash as its stores are consumed, and when exhausted, undocks, deorbits, and re-enters the atmosphere over the Pacific Ocean.

The Autonomous Transfer Vehicle (ATV) is provided by ESA and is scheduled to be completed in 2003. It will be launched on an Ariane V launch vehicle. It is roughly three times as large as the Progress M1, but is functionally the same as described above.

The H-2 Transfer Vehicle (HTV) is provided by National Space Development Agency of Japan (NASDA) and is scheduled to be completed in 2002. It will be launched on a H-2A launch vehicle. Its purpose is to carry pressurized cargo only. Unlike the Progress M1 and ATV, the HTV doesn't carry resupply fuel, and it doesn't dock. It rendezvous to the forward end of the Station and is grappled by a robotic arm and berthed.

1.4 Operations Concepts

The overriding principle of Station operations is that the ISS will operate as an integrated vehicle with an integrated crew and a single crew commander. This means that all crewmembers perform a common set of tasks and have a common knowledge base of the entire Station. To ensure that integration, English is defined as the language of operations. Therefore, all important operations discussions, either between crewmembers or between crew and ground, are conducted in English. This ensures that all parties understand what is being discussed, its impacts, and any decisions made. Another concept to further crew integration is that a crew rotation involve the entire crew of three (no partial crew rotations). This way the crew trains together, launches together, works together, and returns together. The Multilateral/Bilateral Crew Operations Panel is the primary forum for top-level coordination and resolution of Station crew matters. Of the 51 flight opportunities through Assembly Complete, 25 are currently allocated to RSA, 25 to NASA, and 1 to NASDA.

The control centers Mission Control Center-Moscow (MCC-M) and Mission Control Center-Houston (MCC-H) (a.k.a. "ground") are mainly responsible for core system planning and operations, while the crew is mainly responsible for payloads, Extravehicular Activity (EVA), and robotic operations. Although the ground is "prime" for system operations, limited communication coverage requires that the crew be trained for routine core operations, have the

capability to review all Caution and Warning messages, and respond to time-critical anomalies from anywhere in the Station. This means that the crew must have access to most of the vehicle commands. This is presently a technical challenge, since the crew currently does not have a single command and data interface for the entire vehicle.

Although one integrated plan is used by the onboard crew to ensure safety and prevent payloads from interfering with each other, each partner has mission planning responsibilities for the payloads, elements, and transportation vehicles that it provides. The Execute Planning Control Board is responsible for overall integration.

Each partner is also responsible for training the crew on their segment, with the International Training Control Board performing the training integration. Training can be broken into four phases, as shown in Table 1-1.

Table 1-1. Training phases

Phase	Emphasis	Duration
Basic	Vehicle familiarization, science background, operations overviews, survival training, and cross-cultural training	Approximately 1 year
Advanced (training as a member of a group)	Generic training of Station systems and payloads, malfunction procedures, habitation, and Soyuz contingency return training	Approximately 1 year
Increment-Specific (training as a member of a crew)	Mission-specific training for EVA, robotics, activation/ checkout and payloads, multisegment and team training	Approximately 1.5 years
Onboard (Board)	Handover training, proficiency and just-in-time training accomplished as needed on orbit.	

1.5 Traffic Model

The traffic model determines what Earth-to-Orbit Vehicle (ETOV) arrives when. The traffic model is driven by three interrelated items: the assembly sequence, the altitude strategy, and crew rotation. The assembly sequence determines the next piece of hardware to be added to the Station, either Shuttle-berthed modules or unmanned Russian docked modules, and its delivery method. When the designers know the Station hardware to be delivered, specifically its weight and center-of-gravity and the delivery method, they can determine the maximum Station altitude for a successful rendezvous. With any higher altitude, the ETOV does not have sufficient capability to reach that altitude. Launcher capability, both U.S. and Russian, is a major constraint on the assembly sequence planning. This plays into the altitude strategy.

Besides determining the Station's altitude for rendezvous, the designers must also consider certain factors so that a missed propellant resupply/reboost (referred to as a "skip cycle") will not result in a dangerously low orbit. These factors include equipment design limits, microgravity requirements, orbital decay due to atmospheric drag and solar flux, and having enough "pad" in

the propellant onboard and/or orbital altitude. In case of a skip cycle, the Station can reboost itself using FGB/SM propellant and the SM jets. If the orbit is high enough, the Station can stay in the present orbit and wait for the next Progress. All of these factors and many more result in an orbit planned as high as possible to meet microgravity requirements. The orbit is bounded on the "high" end by equipment design limits and the ability of the ETOVs to reach the Station; it is bounded on the "low" end by the requirement that the Station must be able to miss a propellant resupply/reboost mission and still be above a defined safe minimum altitude by the next resupply/reboost mission.

A further complication is crew rotation, defined as bringing up a new crew and returning the old crew. How often crews are rotated is governed by several factors: crew health, ETOV capability, efficient use of resources, etc. Since long-duration spaceflight takes a physical, mental, and emotional toll on the crew, crew health is one of the factors that determine how long a crew stays on orbit. Another factor that determines length of crew stay on orbit is "training resources." The longer a crew stays on orbit, the more assembly tasks they are required to perform and, therefore, the more training they must receive. There are limits on the amount of training that the crew and training facilities can support. While crew health and crew training are two factors that limit a crew's maximum stay, ETOV capability and efficient use of resources limit a crew's minimum stay. Crews are rotated on either the Shuttle or the Soyuz. When crews are rotated on the Shuttle, they take away capability of the Shuttle to bring up hardware; cargo must be taken off to compensate for the weight of the crew and their equipment. Remember, ETOV launcher capability is a major constraint to the assembly sequence, therefore, the more crew rotations done on the Shuttle, the more Shuttle flights required to launch the U.S. elements. Launching crews on the Soyuz instead of the Shuttle is not a solution. First there are only a limited number of Soyuz vehicles. Additionally, when the Soyuz is used for a three-person crew rotation (it is always preferred to rotate the entire crew at the same time), the Station crew is also the Soyuz crew and therefore must be trained for Soyuz ascent tasks (they must always be trained for entry tasks, because they may need to make an emergency entry at any time, even if the Shuttle is their planned entry vehicle). This significantly increases their training time. Therefore, efficient use of the ETOVs determines the minimum crew stay. This discussion provides merely an illustration of how three factors influence crew rotations and should not be considered an exhaustive review.

The assembly sequence, altitude strategy, and crew rotation results in a traffic model. A traffic model shows what ETOVs arrive at the Station and when. Looking at the Figure 1-3, a crew arrives on a Soyuz, followed by a Progress resupply flight. Besides resupply, Progress also reboosts the Station to a higher altitude. How high the Station is reboosted depends on two things: low enough that the Station's orbit will decay to the right altitude for the Shuttle assembly flight rendezvous but high enough in case the next Progress flight is missed. Approximately 5½ weeks after the reboost, the Shuttle assembly flight docks with the Station. There is no crew rotation on this flight, so the entire Shuttle uplift capability can be devoted to bringing up new Station hardware. A later Progress flight P is a resupply/reboost mission. The next Shuttle flight is another assembly flight without a crew rotation. A crew rotation occurs on the third Shuttle flight, which means that there had to be enough weight and performance margin to bring up Station hardware and three new crewmembers. Note that this generic crew will be

on-orbit for 156 days. Although not long compared to cosmonaut stays on Mir, the stay will be only 1 month short of Shannon Lucid's record-breaking stay in space for an American.

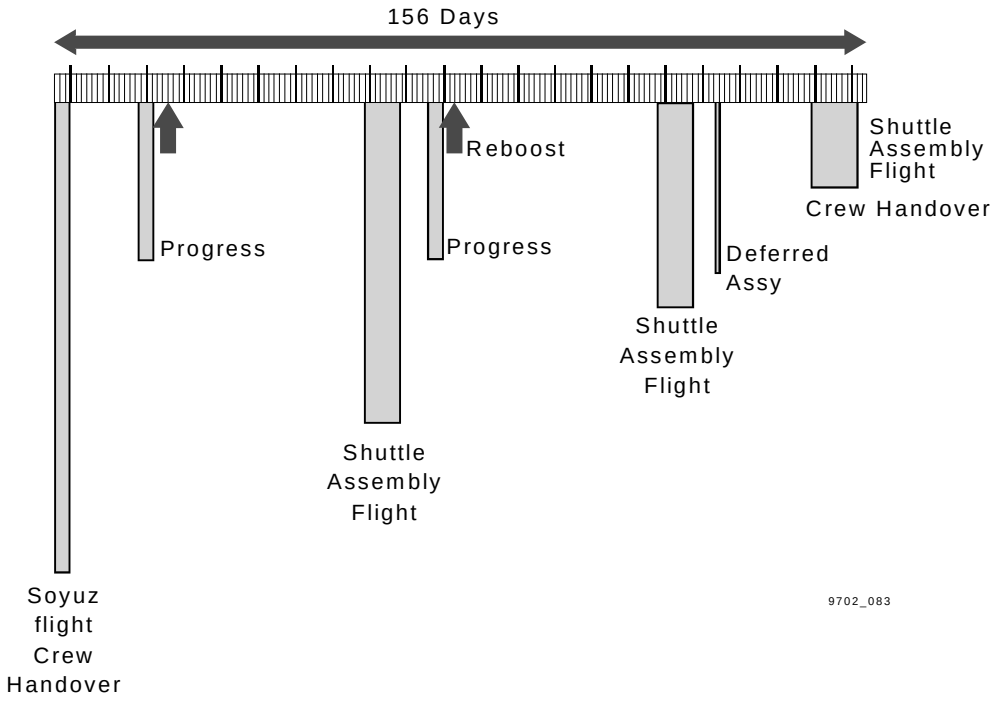

Figure 1-2. Generic expedition 1 travel model

In Figure 1-2 the event labeled "Deferred Assy," stands for Deferred Assembly tasks. To reduce the number of assembly tasks that the Station crewmembers must perform and, therefore, reduce their training time, it is usually preferable for the Shuttle crew to do as many of the assembly tasks as possible. However, there are times when there are too many tasks to be performed in the short time that the Shuttle is docked to the Station. Therefore, certain tasks are "deferred" until after the Shuttle has departed, and those tasks will be done by the Station crew. Additional information is included in the next section.

1.6 Life During an Expedition

While previous paragraphs explained the Expedition 1 traffic model, the events in a simplified traffic model include the following:

- Progress docking
- Reboost
- Quiescent operation
- Shuttle docking/mated operations
- Crew handover
- Deferred assembly.

1.6.1 Progress Docking

The key operations concept in any Russian vehicle docking is that the docking must be accomplished over Russian communication sites. (MCC-M must have command and control capability.) The actual docking is automated with little or no crew action required, but the Station crew can fly the vehicle remotely from the SM, if required. The basic sequence of events requires the PVAs to be "feathered" (oriented parallel to the velocity vector of the docking vehicle) to prevent them from being "plumed" by the jets of the Progress. Because the arrays are feathered, they are not able to track the Sun and, therefore, are not able to generate normal power outputs. During this period of lower power output, nonessential Station operations, like payloads operations, are suspended, and the vehicle is powered down. The Station is then maneuvered to docking attitude. All these actions happen several hours before docking. During a period of MCC-M ground coverage, the Progress does a fly-around, acquires the Kurs radar system, and is commanded to dock. After docking, the Station is then maneuvered to its nominal attitude and the arrays resume Sun tracking. With full power being generated, all systems are powered up approximately 1 hour after docking. Checkout and unloading of the Progress takes about 1 week of heavy activity. The vehicle typically remains docked until just before the arrival of the next Progress.

Instead of a Progress, the Russian vehicle could be a module such as the Research Module (RM). The RM would come up as an independent spacecraft (versus being brought up in the payload bay of the Shuttle) with an attached Universal Instrumentation System (UIS) delivering the module to the Station for docking to the Universal Docking Module (UDM). Once docked, it usually takes 1 week and potential EVAs to activate and checkout the new module. During this activation, some tasks could require major system reconfigurations, involving the interruption of data and/or power. Also, when busy with assembly tasks, the crew may not be available for payload operations.

1.6.2 Reboost

Besides being a resupply vehicle, the Progress is also the primary method to reboost the Station. The key operations concept in a reboost is that the ground is heavily involved. The Trajectory Operations Officer (TOPO) at MCC-H plans the reboost and MCC-M actually executes it. At least for the early Progress reboosts, the crew has little insight and no command capability to either start or stop the reboost. The basic sequence of events requires that the Station be transitioned to the reboost software mode and then maneuvered to the reboost attitude. Attitude control is very important, since the reboost is an open-loop burn (a burn in a predetermined attitude for a fixed time without active guidance). At the appropriate time, MCC-M commands the jets to fire for a specific length of time. During the burn, certain system inhibits (e.g., water dump inhibits) are in place, but powerdowns are not expected. Payload operations requiring microgravity will be suspended. Reboosts usually take two burns. At the end of the second burn, the Station is maneuvered to its nominal attitude, and the software is transitioned to its standard software mode. The vehicle is ready to spend the next several weeks or months in quiescent operations.

1.6.3 Quiescent Operations

Quiescent operations refers to the "quiet period" after reboost when the Station is not being visited by ETOVs and, therefore, microgravity operations can be maintained for long periods of time. At Assembly Complete, there is a requirement of 180 days per year of microgravity operations occurring in increments of at least 30 days. Although there are no requirements on the length of time that microgravity operations are achieved during assembly, planning attempts to maximize microgravity periods. This is the period when the majority of payload operations are accomplished, and when the crew can expect a "nominal work week" of 44 hours. On days 1-5 this results in 8 hours per day of work activity plus 2 hours of exercise and 30 minutes of planning. Besides payload operations, these work days also involve any deferred assembly, maintenance, and routine system operations. Four hours of housekeeping occur sometime over days 6 and 7.

1.6.4 Shuttle Docking/Mated Operations

While a Shuttle docking is not significantly different than a Progress docking, one difference is that there is a data interface between the Shuttle and Station. This means that the Shuttle crew has insight into ISS status and can command the ISS. Once mated, assembly tasks can be started. Shuttle crews are usually "prime" for the majority of the assembly work. This lessens the training requirements for the Station crew and allows the most current and therefore proficient crew to perform the task. One reason the Station crew would be "prime" is if the Shuttle crew was unavailable (an example may be multiple EVAs). For the Shuttle crew to do two EVAs, there must be a day off in between. If the schedule does not allow for the day off, the Station crew may have to do the EVA. (Another option is to have two Shuttle EVA teams, with Team 1 doing the first EVA and Team 2 doing the second EVA). If not involved in assembly tasks, the Station crew will be busy with transfer tasks; transferring the logistics from the Shuttle and/or MPLM into the Station, and finished experiments and other items to be returned to Earth into the Shuttle/MPLM. Prior to 7A, all U.S. assembly EVAs are Shuttle based (the Joint Airlock is

brought up on 7A). Shuttle-based EVAs are done by the Shuttle crew and require the Shuttle crew to stay in the Shuttle almost exclusively. Much of the assembly use the Shuttle robotic arm. After 7A, most assembly takes place in the Station with little orbiter involvement. This means the Shuttle crew will be in the Station doing EVAs using the Joint Airlock and operating the Station robotic arm. Typical mated operations involve 6-9 days docked, three EVAs, two major robotics operations, and system and/or payload activation. During this activation, some tasks could require major system reconfigurations, involving the interruption of data and/or power. Actual payloads operations would be minimal, due to Station and Shuttle crew workload.

1.6.5 Crew Handover

On flights that have a crew rotation, the arriving and departing Station crews must "handover" to ensure a smooth transition. The handover actually starts before launch of the Shuttle. For several weeks before launch, the two crews have talked on videocons as the on-orbit crew has explained anything that might be different from what they encountered in training; any Station anomalies, any techniques that they developed, and anything else that they believe eases the transition of the new crew. Once docked, the overlap in two crews lasts 1-7 days. The arriving crew receives safety briefings and participates in some safety exercises. They are also briefed on vehicle changes and payload operations. Crews also have to exchange Soyuz seat liners and associated equipment.

1.6.6 Deferred Assembly

Once the Shuttle has undocked, deferred assembly tasks can be accomplished. One key operations concept is that deferred assembly tasks are usually not time critical. Since there are no constraints to accomplish the tasks within the 6-9 days the Shuttle is docked, tasks are fit in to the overall schedule as time allows. Deferred assembly tasks should not contain time-critical procedures. This means the task cannot require that the entire procedure be done in x hours or something bad will happen; e.g., the payload freezes if the procedure is not finished within 3 hours. Deferred tasks usually assume the crew has been on orbit for several weeks or even months and therefore is not current and/or proficient enough to be able to accomplish this type of time-critical activity. Due to this relaxed timeline, the crew is given time to review procedures and systems knowledge before the event. An example of this relaxed timeline is, although EVAs could be scheduled as close as every other day, deferred EVAs are usually scheduled every 3-4 days. As in any assembly task, some tasks could require major system reconfigurations involving the interruption of data and/or power. Also, when busy with assembly tasks, the crew may not be available for payload operations. Finally, EVAs and robotics operations affect microgravity operations, so although deferred EVAs may be accomplished during the period normally associated with quiescent operations, microgravity experiments may be affected.

1.7 Summary

The purpose of the ISS is to provide an Earth orbiting facility with the resources to conduct microgravity research. The objectives of the ISS program are to provide access to a world-class microgravity laboratory as soon and as easily as possible, to develop the ability for long-duration

spaceflight, to develop effective international cooperation, and to provide a testbed for 21st Century technology.

The name and purpose of each major element/module follows:

- Hab and Service Module (SM) provide living facilities.
- Lab, Research Modules (RMs), Japanese Experiment Module (JEM), Columbus Orbital Facility (COF), and Centrifuge Accommodations Module (CAM) provide research facilities.
- Nodes, Docking and Stowage Modules (DSMs), Docking Compartments (DCs), and Universal Docking Module (UDM) provide docking ports for the attachment of other modules.
- Soyuz and Crew Rescue Vehicle (CRV): provide emergency crew return capability.

The major events on the ISS are ETOV docking, reboost, quiescent operations, crew handover, and deferred assembly. During any of these events, the ISS is considered an integrated vehicle with an integrated crew and a single commander. The normal delegation of assignments has the ground responsible for system operations and the crew responsible for EVAs, robotics, and payload operations. Although each mission control is responsible for control of activities on their segment and MCC-H has overall integration responsibility, the crew has the capability to control all the major functions on the ISS.

Section 2
Command and Data Handling Overview

2.1 Introduction

There are a total of over 100 different computers on the Station at assembly complete which are primarily used to collect data from onboard systems and payloads; process that data with various types of software; and distribute commands to the right equipment. Figure 2-1 identifies the various partner systems that comprise the overall Station computer system: the U.S. Command and Data Handling (CDH) System, the Russian Onboard Complex Control System (OCCS), the Canadian Computer System, the Japanese Data Management System and the European Data Management System.

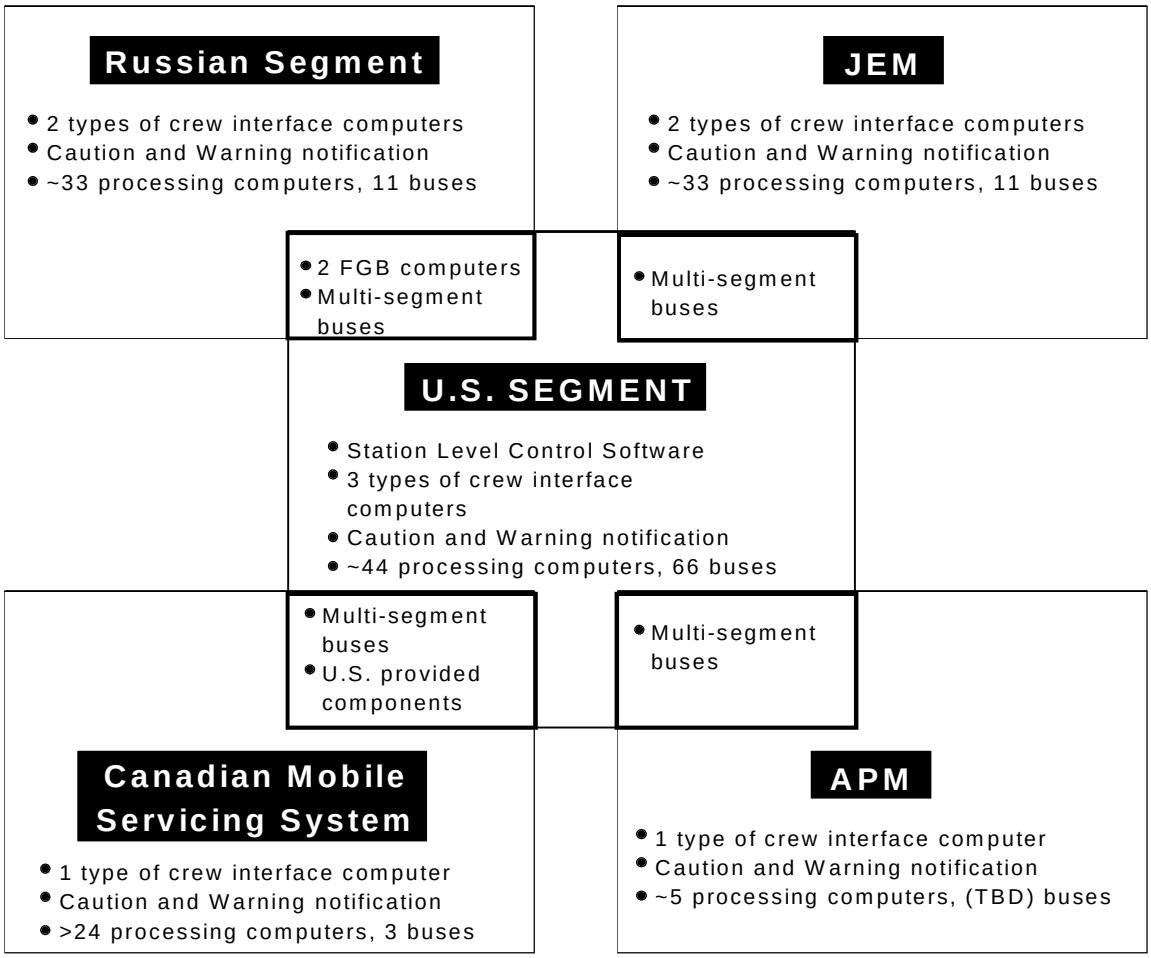

Notes:

1. Crew interface computers exclude computers used for payload operations and dedicated hardware switch panels.
2. The multisegment buses connect to various computer ports throughout the Station. This allows for some crew interface computers to be used in multiple computer systems.
3. Processing computers do not include keyboards or monitors.

Figure 2-1. Station computer systems at assembly complete

Five major points from Figure 2-1 form the basis for the rest of this section.

(1) The U.S. CDH System has a unique aspect to its computer system because it provides "Station level control" software. This software keeps all parts of the Station vehicle operationally integrated.

(2) There are a variety of crew interface computers throughout the Station. The crew interface computers have some common as well as unique characteristics to each partner system.

(3) All Station computer systems have Caution and Warning (C&W) capabilities. These capabilities also have some common and unique characteristics throughout the partner systems.

(4) All partners provide numerous processing computers and data buses located within their partner segment. There are two exceptions to this. First, two of the computers located in the Functional Cargo Block (FGB) used to process FGB data and commands have hardware provided by the U.S. However, the software within them is Russian developed and Mission Control Center-Moscow (MCC-M) is operationally responsible for them. Second, several portions of the Canadian Computer System, such as the robotic workstation, are provided by the U.S.

(5) Multisegment data buses exist between partner computer systems. These buses ensure that the Station level control software, the crew interface computer inputs, the C&W information, and the partner processing computers and associated data buses are functioning as an integrated system throughout Station.

2.2 Objectives

Upon completion of this section, you should be able to:

- Describe the seven International Space Station (ISS) modes
- Identify the purpose of the seven different types of crew interface computers on the Station at 8A
- Explain how the four classes of C&W alarms are indicated on Station
- Describe the U.S. CDH-tiered architecture
- Describe the naming convention used for Multiplexer/Demultiplexers (MDMs) and 1553 buses
- Explain operational considerations associated with CDH software telemetry collection, command response, time synchronization, and automated Fault Detection, Isolation, and Recovery (FDIR)
- Relate the Russian OCCS architecture to the U.S. CDH architecture
- Describe the interfaces between the U.S. and Russian computer systems.

2.3 Station Level Control Software (Modes)

The ISS supports a variety of operations including microgravity, reboost, and proximity operations. The configuration of the Station systems and the allowable activities vary according to the operation. For example, it would be unwise to fire propulsion jets while microgravity payload operations are in progress. To aid crews and controllers in configuring the systems and preventing unwanted activities, the ISS has Station-level control software divided into seven Station modes. Table 2-1 identifies the Station mode, characteristics, and example system configuration changes when transitioning into that mode. Some of these changes are done automatically by the software and others are performed by the operator.

Table 2-1. Station modes

Station mode	Characteristics	Example system configuration changes
Standard	Supports all nominal housekeeping, internal maintenance, and nonmicrogravity payload operations Entered automatically by the software from microgravity mode, or manually by the crew or ground Serves as gateway between microgravity, reboost, proximity operations, and external operations modes	• Transition International Partner (IP) segments to standard mode • Power on and activate payload computer • Shutdown Extravehicular Activity (EVA) operation support equipment • Shutdown Active Rack Isolation System (ARIS) • Shutdown Mobile Transporter (MT)
Microgravity*	Supports all microgravity payload operations Entered manually by crew or ground	• Transition IP segments to microgravity mode • Shutdown Space-to-space subsystem radio • Startup ARIS • Configure Guidance, Navigation and Control (GNC) to Control Moment Gyro (CMG) attitude control mode
Reboost *	Supports Station orbit reboost operations Entered manually by crew or ground	• Transition IP segments to reboost mode • Configure GNC to CMG/Reaction Control System (RCS) assist attitude control mode
Proximity Operations *	Supports all nominal rendezvous and departure operations for the orbiter, Soyuz, Progress-M and all other external vehicles Entered manually by the crew, ground or external vehicle	• Transition IP segments to proximity ops mode • Configure space-to-space subsystem radio to orbiter mode • Configure GNC to CMG/RCS assist attitude control mode
External Operations *	Supports all external assembly and maintenance operations involving EVAs and external robotics Entered manually by the crew or ground	• Transition IP segments to external ops mode • Configure space-to-space subsystem radio to EVA mode • Configure GNC to CMG/RCS assist attitude control mode
Survival *	Supports long-term Station operations in the presence of a major failure and lack of operator control Entered manually by crew, ground, or external vehicle OR automatically upon detection of a complete failure of critical Station functions.	• Transition IP segments to survival mode • Shutdown user payload support equipment • Shutdown ARIS • Shutdown EVA operation support equipment
Assured Safe Crew Return (ASCR) *	Supports emergency separation and departure of the Soyuz vehicles for an unplanned crew return. Entered manually by crew, ground or external vehicle	• Transition IP segments to ASCR mode • Shutdown user payload support equipment • Shutdown ARIS • Shutdown EVA operation support equipment • Command GNC to attitude selected for Soyuz departure

*Mode also supports all housekeeping, internal maintenance and non-microgravity payload operations that are compatible with the mode.

Station modes are very similar to major modes used on the Space Shuttle. The Station is only in one mode at a time; the mode reflects a major operational activity, and the Station must be commanded to transition to another mode. All mode transitions can be manually commanded by the onboard crew or ground. Transitions to proximity operations, survival, or Assured Safe Crew

Return (ASCR) can also be commanded from an external vehicle. The Station level control software can automatically transition to only two modes: to survival from any mode, and to standard from microgravity mode only.

Notice from Table 2-1 that when a transition to a mode occurs, the software always automatically issues commands to the International Partner (IP) segments to transition to the required mode. This reflects the "multisegment" nature of this software. Also notice that the transition between modes, from microgravity to proximity operations for example, must always transition through the standard mode, except for survival and ASCR modes.

Because of the implied criticality of survival mode, the Station-level control software monitors the vehicle's condition and automatically transitions to survival mode under specific conditions. Conditions that trigger the transition primarily involve repeated voltage limit violations of Battery Charge Discharge Units (BCDU) as well as various losses of the U.S. Internal Thermal Control System (ITCS). The crew or the ground can disable or enable the automatic transition to survival mode capability. Since Station-level control software is part of the U.S. CDH System, the crew can command a mode change only through the U.S. crew interface computer used to control the vehicle.

2.4 Crew Interface Computers

There are a total of seven different types of crew interface computers on the Station at 8A. The Station has significantly fewer hardware switches used to control systems than past space vehicles typically did. Instead, the vehicle is controlled with "software switches" located on graphical displays of crew interface computers (see Figure 2-2). Thus, the crew interface computers have replaced the typical cockpit environment and are crucial to the successful operation of the Station. Table 2-2 lists each type of crew interface computer, its purpose, a description of the hardware/software used, and 8A location. Because the laptops are easily and often moved throughout the Station, location in Table 2-2 refers to the port location when the crew interface is a laptop.

An advantage to using laptops as the primary crew interface to systems is that they are easily moved and relocated throughout the Station, assuming the appropriate data and power connectivity is available. As shown in Table 2-2, ports for the PCS are available in all major modules. At Assembly Complete, there are also PCS ports in the JEM and APM, and JEM/APM ports in the U.S. lab.

Another key advantage to using laptops on Station is the ease of upgrading them. Computer capabilities are rapidly increasing, and with the laptop-based design, Station will be able to incorporate new laptops fairly easily. In fact, prior to 5A, an earlier version of the IBM Thinkpad, the 760ED model, is being used on Station. The transition from the 760ED to the 760XD at 5A for the PCS specifically, makes a number of extra laptops available onboard. These are initially used to supplement the number of SSC computers as indicated in Table 2-2. More detail on the evolution of the laptops onboard Station can be found in Section 2.1 of the CDH Training Manual (TD9703).

Table 2-2. Crew interface computers at 8A

Type of crew interface computer	Purpose	Hardware/software description	8A location
Portable Computer System (PCS)	• Execute Station mode changes • Manage Station C&W • Command and Control (C&C) U.S. systems	• IBM Thinkpad 760XD laptop at 8A • Data and Power cables • Various PC cards • 6 PCSs on Station at 6A • 2 general purpose printers available in U.S. lab • Solaris UNIX operating system	PCS Ports: • 4 in lab • 2 in Service Module (SM) • 2 in FGB • 2 in airlock • 2 in orbiter
Station Support Computer (SSC)	• View U.S. and multi-segment electronic procedures • Use inventory management system • View and edit onboard short term plan • Provide standard office automation tools and other crew support software	• IBM Thinkpad 760XD laptop at 8A • Power cables • Radio Frequency (RF) PC cards • 1 SSC on Station at 6A (Note: 7 "early" SSCs are also available at 6A, but use an earlier version of the laptop - the IBM 760ED) • Windows 95 operating system • Additional Thinkpad will serve as file server for RF Local Area Network that allows SSCs to communicate to server	• A minimum of 3 RF Access Points are placed strategically throughout the modules to maximize RF coverage. • Access Points include power supply connections.
Control Post Computer (CPC)	• C&C Russian systems using combination of software and hardware switches • Manage Station C&W	1 Fixed console with interfacing laptops	SM
Russian laptop	• Command and control Russian systems • Manage Station C&W	• IBM Thinkpad 760ED • Data and power cables • Various PC cards • 1 General purpose printer for Russian segment	Russian laptop ports: • 4 in SM
Payload laptops and Payload rack computers	Command and control payloads	• TBD • Many payload laptops run independently from the computer systems; don't require port connectivity	Payload ports: • 4 U.S. payload ports and 1 NASDA port in U.S. lab • TBD ports in Russian segment
Robotic workstation computer	• Command and control robotics • Manage Station C&W	• 2 fixed robotic workstations include 2 Hand Controllers and dedicated processing computers • A PCS connects to the robotic workstation or to various robotics ports	Robotics ports for use with PCS: • 2 in lab
Crew Health Care System (CHeCS) laptop	Monitor crew health	IBM Thinkpad 760XD	Crew health ports: • 6 in SM • 3 in lab

Notice that the IBM Thinkpad 760XD laptop is used for the PCS, Station Support Computer (SSC), and Crew Health Care System laptop. It is also used with the robotic workstation. The same computer hardware is also used in the Japanese Experiment Module (JEM) and APM modules as the primary crew interface computer. Even though the IBM Thinkpad 760XD is used by multiple partners, the software is unique to each partner. In particular, crew displays and navigation methods are different for each partner's crew interface computer. However, all displays are required to use the English language and metric system units. Other languages and measurement units may also be used in addition to English if desired.

The display shown in Figure 2-2 is the “Homepage” on a U.S. interface computer (PCS). It is similar to the desktop screen on a personal computer display. Crewmembers can access system information across several elements by clicking on a subsystem button located on the right side of the display. Notice the display is very graphical, in contrast to Shuttle displays.

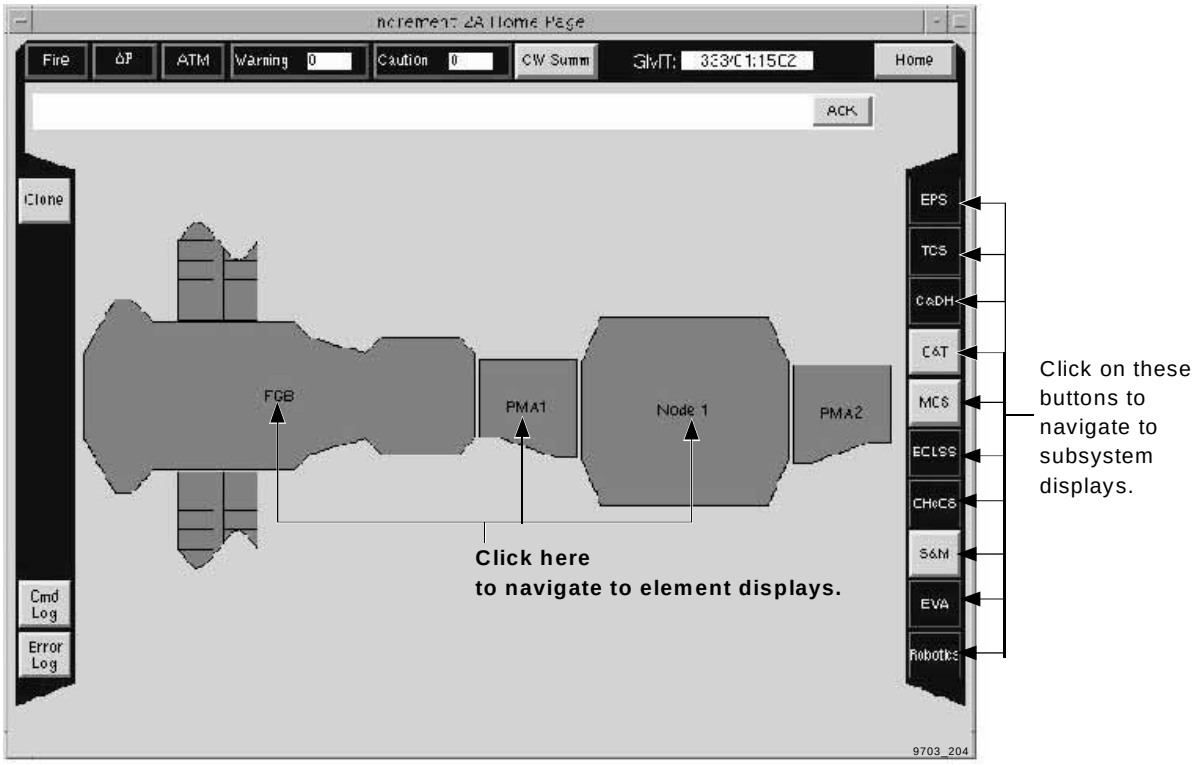

Figure 2-2. Graphical display

2.5 Caution and Warning

2.5.1 C&W Function and Classes

The C&W System alerts the crew and ground of conditions that: 1) endanger the safety of the crew or Station, 2) negatively impact mission success, or 3) indicate out of tolerance conditions.

Events that trigger the C&W System are grouped into four classes which are common across all partner segments. The classes tie directly to the aural and illumination methods that are used to indicate the conditions. Table 2-3 identifies the C&W classes, definitions, and example events. The tone and color associated with each class is also depicted. Note that there are only three defined emergencies on Station: fire, loss of pressure, and toxic atmosphere. Also, notice that while advisories are considered one of the C&W classes, they are described as a "non-C&W item" because they are used for status and support information only.

Table 2-3. Caution and warning classes

C&W class	Definition	Example events
Class 1 - Emergency tone - repeating beeps color - red	Event that causes a life-threatening condition for the crew that requires immediate crew action.	Only three defined emergencies: 1. Fire or smoke in pressurized element 2. Rapid change in cabin pressure 3. Toxic atmospheric conditions
Class 2 - Warning U.S. tone - siren Russian tone - TBD Color - red	Detected hardware or software failure which requires immediate corrective action to avoid major impact to the mission, or potential loss of Station or crew.	• Loss of the primary U.S. Guidance, Navigation & Control (GNC) Computer • Detection of high cabin pressure • Loss of CMG attitude control
Class 3 - Caution U.S. tone - constant tone Russian tone -TBD Color - yellow	Out-of-tolerance condition that is not time critical in nature and identifies impact which, if left uncorrected, may become a Warning.	• Loss of the backup GNC Computer • Critical Failure of the S-Band Communications Baseband Signal Processor • Failure of 1 of 4 U.S. CMGs which provide attitude control
Class 4 - Advisory	Non-C&W message which provides information about systems status and processes.	• Non-Critical Failure of S-Band Baseband Signal Processor • Trip of Remote Power Control Module (electrical switch)

2.5.2 C&W Indications

There are three methods for indicating to a crewmember that a C&W event has occurred on Station: illuminated lights on the onboard C&W panel hardware, tones from onboard audio equipment in the Communications System, and text/graphic messages on the PCS and/or Russian PCS. All three methods are used together to indicate emergencies, warnings and cautions. Only the text/graphic message is used for advisories.

The U.S., Japanese and European modules use the same U.S. designed and built C&W panels shown in Figure 2-3. The C&W panel consists of five pushbutton lights: one for each of the emergencies, one for warning and one for caution. There is also a test button to ensure the lights are still functioning. The emergency and warning buttons are red, and the caution button is yellow. Figure 2-4 shows the Russian C&W Panel which is completely different from the Mir C&W panel. The panel consists of lights which indicate the type of C&W event and the effected module, and buttons for manual event initiation and silencing events.

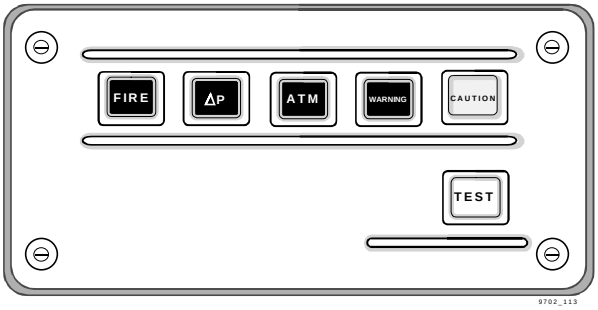

Figure 2-3. U.S. segment caution and warning panel

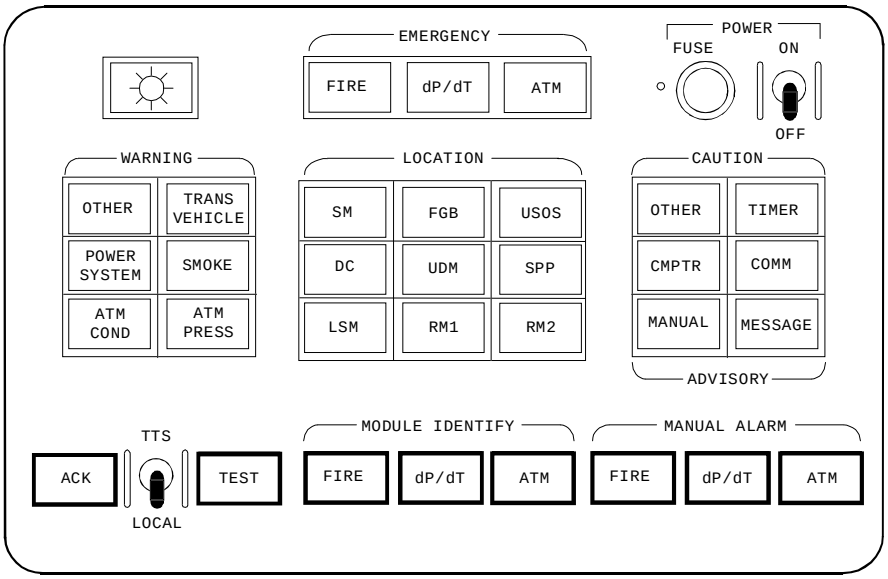

Figure 2-4. Russian segment caution and warning panel

While the C&W panels illuminate the event, and the PCS provides detailed information; neither of them provide the associated tone. There are three distinctive different C&W tones on Station that correspond to the C&W classes. (Russian tones are very similar to U.S. tones.) Tones in the U.S. segment, the JEM and the APM are annunciated by the communication system's Audio Terminal Unit (ATU). Like the C&W panel, the U.S., Japanese and European modules contain the same U.S. designed and built ATUs. The Russian modules annunciate tones using the Telephone-Telegraph Communication Subsystem (TTCS). There are two different TTCS Audio Control Units (ACUs) used in the Russian segment. The 95-1 unit used in the SM is identical to

that used on Mir. However, a newer model, 95-5, is used in the FGB. Both the ATU and the ACU are discussed in more detail in the Communications and Tracking (C&T) section.

PCSs are an essential information source for C&W. Current operational concepts require at least one operating PCS in each major Station module to allow management of detailed C&W information. The PCS provides several C&W displays, including the C&W header. Notice from Figure 2-5 that the C&W Header is very similar to the U.S. C&W panel, but also includes an Event Message display field and counters for in-alarm warnings and cautions. The C&W header is shown at the top of many different PCS displays, not just the ISS Homepage, to ensure crewmembers quick access to the data. Additionally, the ISS Homepage highlights the effected element and system either red or yellow based on the class of the event. Displays are covered in greater depth in the CDH Training Manual.

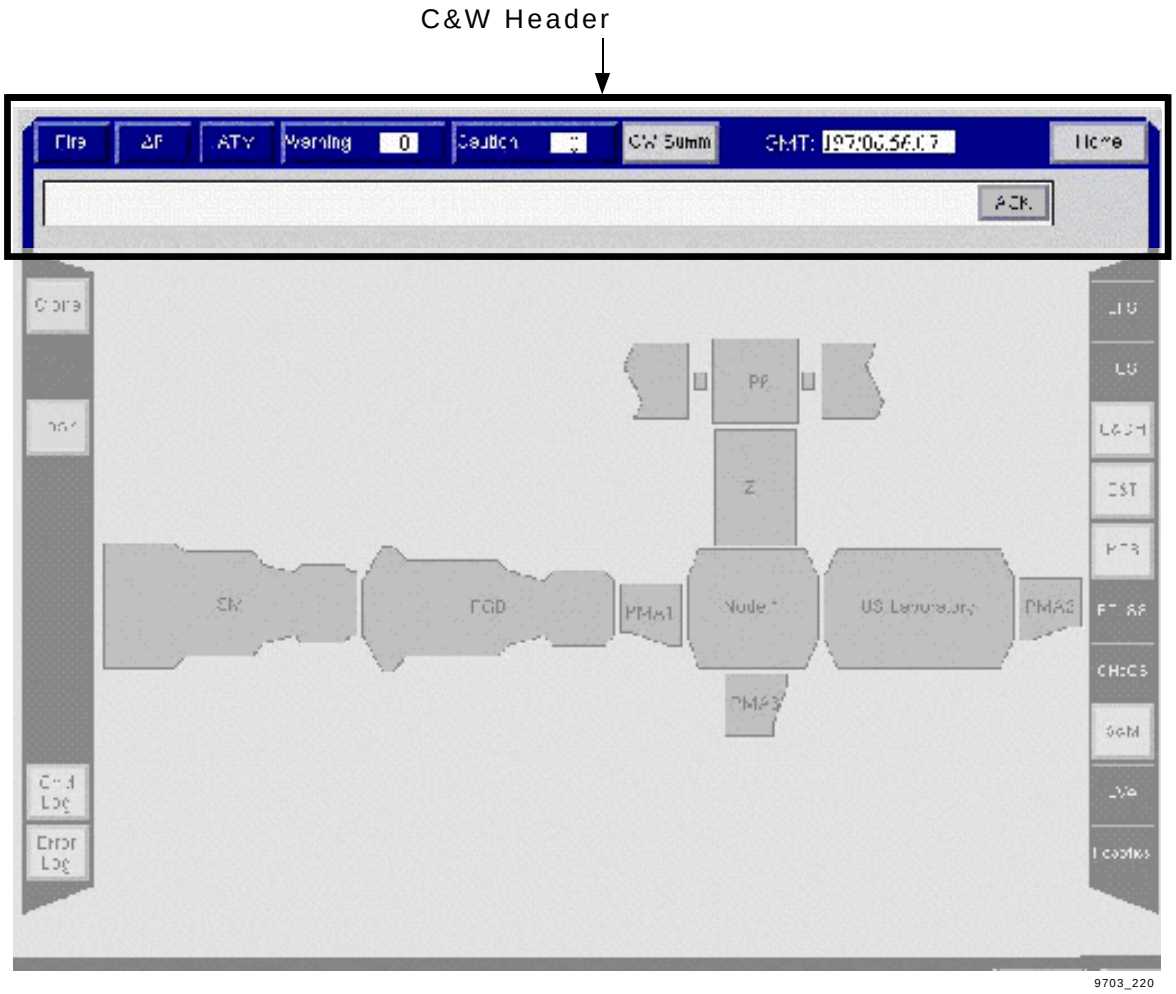

Figure 2-5. C&W header and ISS home page

Because C&W indications can come from three different sources simultaneously, it is important to know the location of these sources. Figure 2-6 depicts the location of these indications: the C&W panels, ATUs/ACUs, and PCS/Russian laptop ports. Notice that there are no ATUs or C&W panels in Node 1.

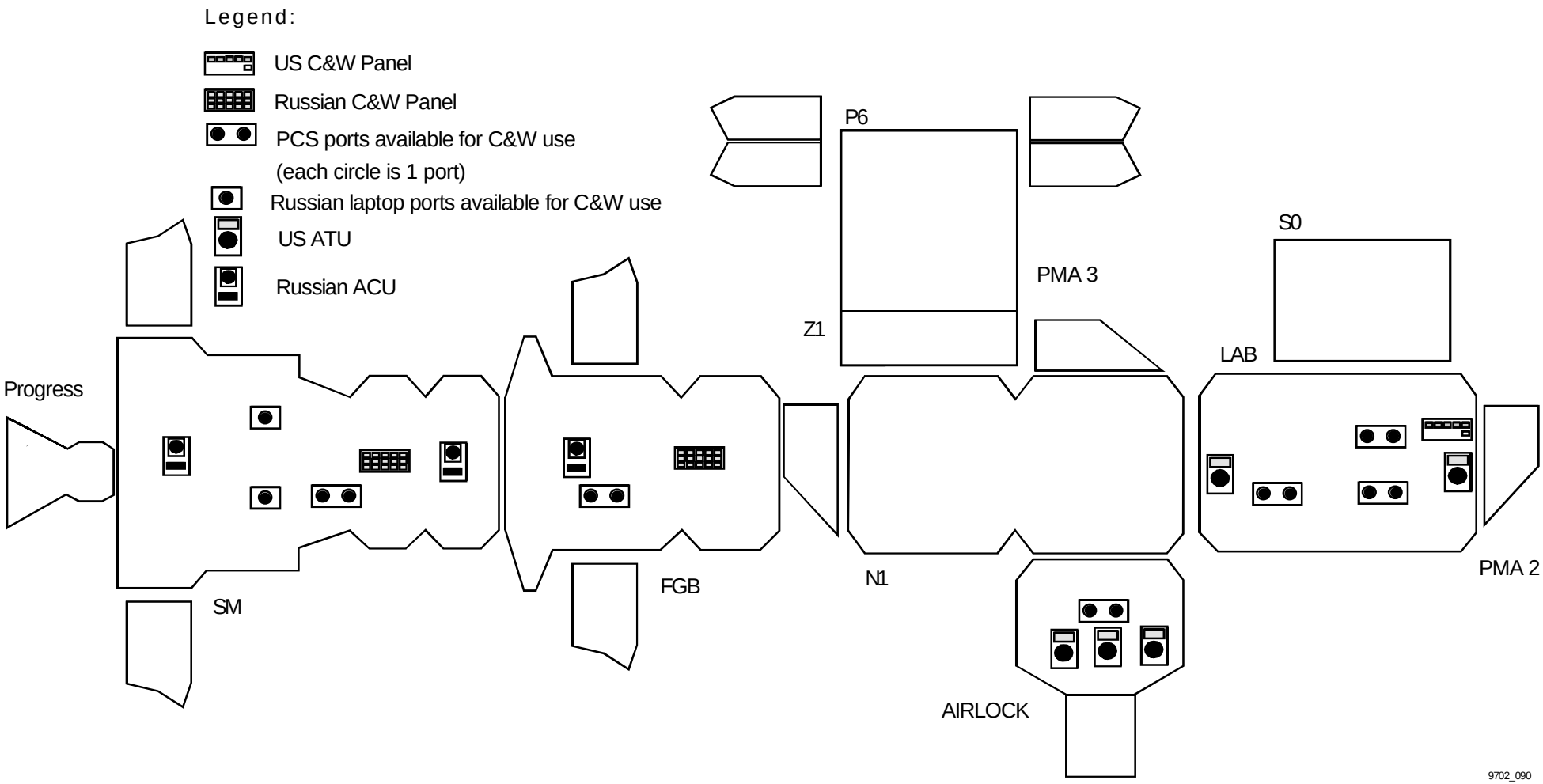

Figure 2-6. Module locations of C&W panels, ports for C&W data and ATU/ACUs

2.5.3 C&W Exchange Between Partner Modules and the Orbiter

While there are three methods for indicating C&W throughout Station, there are limitations on what C&W information is available between the U.S. and Russian segments. The partner computer systems are interconnected by multisegment databuses. These buses are used to share some C&W information throughout the Station. For the U.S. and Russian segments specifically, the Russian computer system and the U.S. computer system send electronic C&W information across the multisegment buses, but the lights and tones are generated by each segment independently. The information exchanged between segments includes only the notification of an in-alarm event, its class and event code number. The same information is passed between the U.S. computer system and the JEM and APM Systems.

Also, recall from Table 2-2 that two PCS ports are available in the orbiter. Therefore, Station C&W information can be viewed and controlled from the orbiter PCSs when docked. The information exchange between the Station and the orbiter is similar to that between the U.S. segment and the Russian segment. The orbiter receives a subset of the electronic Station C&W information and generates the lights and tones independently, according to its own C&W standards. However, the Station does not receive or annunciate any orbiter C&W events.

2.5.4 Caution and Warning Assembly

Prior to lab activation on Flight 5A, all C&W lights and tones are generated by the Russian segment since there are no C&W panels or ATUs in Node 1. However, the U.S. PCS in the Russian segment does provide C&W display information on all U.S. monitored telemetry.

2.6 Processing Computers and Data Buses

2.6.1 U.S. Command and Data Handling System

2.6.1.1 CDH-Tiered Architecture

The U.S. crew interface computers receive their telemetry from and send their commands to the U.S. CDH computers. At 8A, the U.S. CDH System consists of 25 processing computers interconnected by data buses that collect, process, and distribute both data and commands. The computers consist only of the processing box, they have no associated keyboards or monitors.

The CDH computers exchange data and commands in a hierarchical functional structure referred to as "tiers." This is implemented in the U.S. CDH System by grouping the computers and associated data buses into three tiers called the control tier, the local tier, and the user tier. Figure 2-7 shows that the highest tier, the control tier, has the fewest number of computers, while the lowest tier, the user tier, has the greatest amount of computers. (The tiers are often referred to by number - Tier 1, Tier 2, and Tier 3 - rather than by their functional name.)

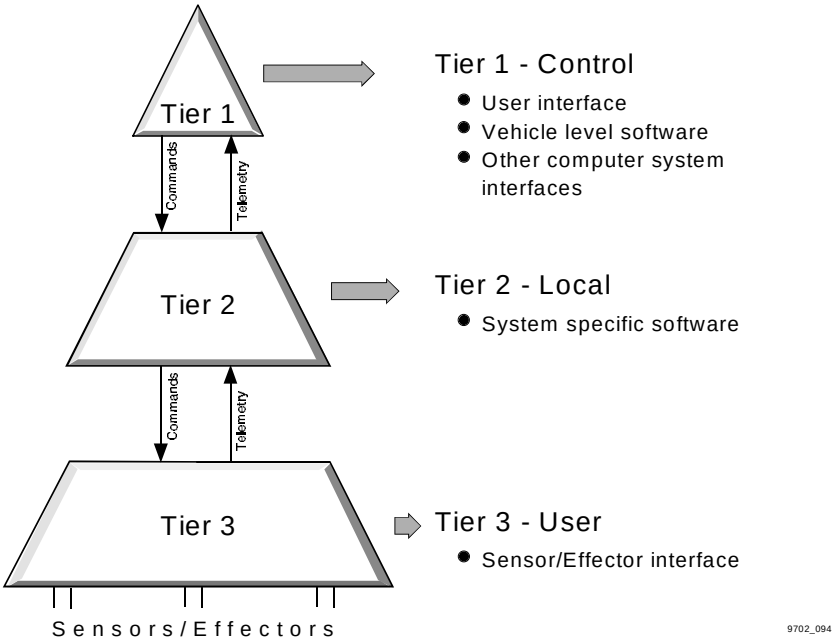

Figure 2-7. Conceptual view of CDH architecture

A key operational consideration to this tiered architecture is the flow of commands and telemetry. As depicted in Figure 2-7, for commands to reach an effector attached to a Tier 3 computer, they must start at Tier 1, pass through Tier 2 and on to Tier 3. Conversely, data (telemetry) from sensors attached to Tier 3 computers must go from Tier 3 to Tier 2 to Tier 1. Crews and controllers are only able to access data that has been passed all the way to the Tier 1 computers.

The primary purpose of the control tier, as the name implies, is to provide the interface for the crew and the controllers. They interface with the CDH computers via the PCS and MCC respectively through Tier 1 only. Tier 1 provides two additional functions: first, it processes vehicle level software such as C&W and Station modes, second, it provides the interface to the International Partner computer systems and the orbiter. Tier 1 computers are connected via data buses to the Tier 2 computers.

The primary purpose of Tier 2 is to execute system-specific application software. An example of this Tier 2 application software includes GNC software that converts CMG gimbal angles and gimbal rates into momentum states. This tier also serves as a connecting point for most "smart components" (see next section). Tier 2 computers are connected via data buses to the Tier 3 computers.

The main purpose of the Tier 3 computers is to provide input/output processing to the thousands of sensors and effectors on the Station. Examples of sensors and effectors that Tier 3 computers interface to include temperature sensors, pressure sensors, rack flow control assemblies, and Remote Power Controllers (RPCs). The Tier 3 computers complete such processing as converting the sensor analog data to digital data and monitoring the condition of the attached hardware.

Thus, Tiers 1, 2, and 3 provide the crew/controller interface, execution of system application software, and sensor/effector interface respectively. There are exceptions to this, but generally this tiered functionality applies throughout the CDH System.

Tier Redundancy

An aspect of the tiered architecture is the redundancy scheme. Generally, the Tier 1 computers are two fault tolerant (three identical computers); the Tier 2 computers are one fault tolerant (two identical computers); and the Tier 3 computers are zero fault tolerant (only one computer with that specific set of software). However, some redundancy in Tier 3 computers is obtained by a complex allocation of software between computers. This redundancy may be obtained by tying redundant strings of sensors and effectors to the different Tier 3 computers or in some cases, placing software that performs some redundant functions in the Tier 3 computers.

Figure 2-8 shows a functional layout of the tiered architecture and redundancy of MDMs at a 5A configuration. The Tier 1 MDMs are located at the top of the schematic while the Tier 3s are located toward the bottom. The schematic also shows the bus connectivity of the MDMs. This is discussed in further detail in the next section.

REVISIONS		
DATE	NAME	VERSION:

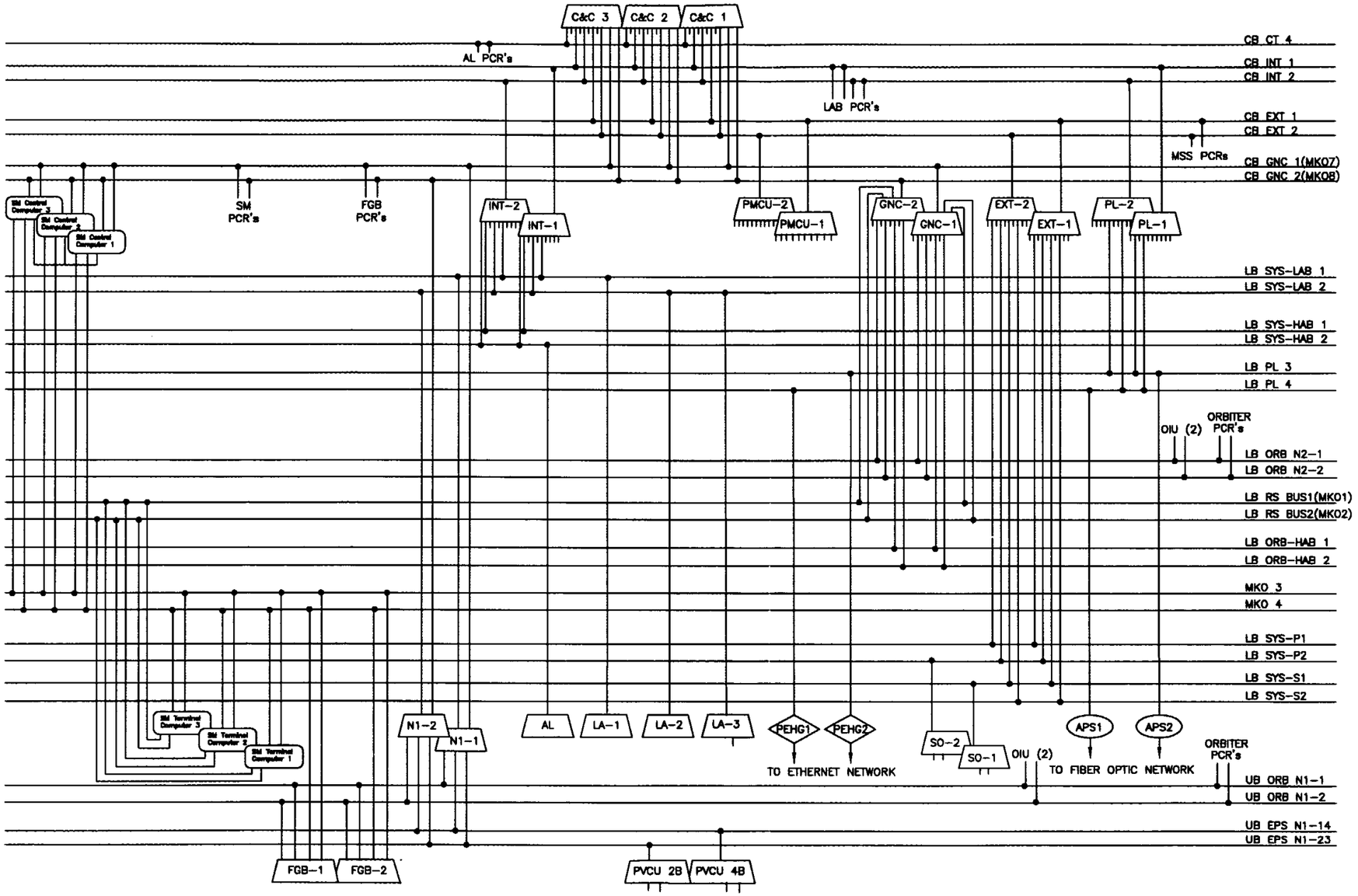

Figure 2-8. Functional drawing of CDH at 5A

TD9702A

SIGNATURE		DATE	NATIONAL AERONAUTICS AND SPACE ADMINISTRATION LYNDON B. JOHNSON SPACE CENTER HOUSTON, TEXAS
DSGN	LEE WEBSTER		
DR	LEE WEBSTER	1-28-86	COMMAND AND DATA HANDLING FUNCTIONAL OVERVIEW
ENGR	EMERY REBRESH		
ENGR			
APP			

CAD FILE	CDH1A-OV-8A	PROGRAM ISS	SIZE D	DWG NO. CDH1A-OV-8A	REV –
	PCN	SCALE NONE			SHEET 1 OF 1

[CDH1A-OV-8A]

Looking at Figure 2-8 in more detail, we can see specific examples of redundancy. There are three identical Tier 1 MDMs, called the Command and Control (C&C) MDMs. The nomenclature for MDMs identifies the primary function of the MDM followed by an indicator for the instance of the MDM. For example: C&C-2 or C&C-3 are redundant C&C computers to the C&C-1 MDM. One of the C&C MDMs is fully operational, while a second is a "warm" backup (powered on and processing data but not commanding equipment) and the third is a "cold" backup (powered off). There are five pairs of Tier 2 MDMs; each MDM in the pair is identical to the other MDM. Typically, one MDM is operational and the second of the pair is powered off. However, the redundant GNC MDM is a warm backup. There are 12 Tier 3 MDMs. None of them are exactly alike, but MDMs performing similar functions are labeled similarly. For example: LA-1, LA-2, and LA-3. All Tier 3 MDMs are nominally powered on and operational.

2.6.1.2 *CDH Hardware*

In the previous section, the overall philosophy of a tiered architecture was described. Within the actual CDH design, the three tiers are composed of various processing computers and buses. There are three major types of U.S. hardware depicted in Figure 2-8: the U.S. MDMs, the associated buses, and the payload network components.

Multiplexers/Demultiplexers

The trapezoidal boxes in Figure 2-8 represent U.S MDMs. (The rounded-corner rectangular boxes in Figure 2-8 depict the Russian computers that directly interface to the U.S. CDH System). As described above, these computers do not just complete multiplexing and demultiplexing tasks - they run application software and process information. Note that the Station MDMs are significantly different from Shuttle MDMs. Shuttle MDMs are true MDMs while Station MDMs are a combination of a MDM and a computer processor.

Figure 2-9 is a picture of a typical MDM. From the figure you can see that MDMs contain processing cards that slide in and out horizontally from the box. All the chips in an MDM are located on the cards; no chips are located on the chassis. This is similar to newer commercial personal computers and allows for easier repair and replacement of parts. All cards connect into the back of the MDM which is called the "backplane". MDMs come in three sizes based on the maximum number of cards that can be put in the MDM. The available sizes are 4, 10, and 16.

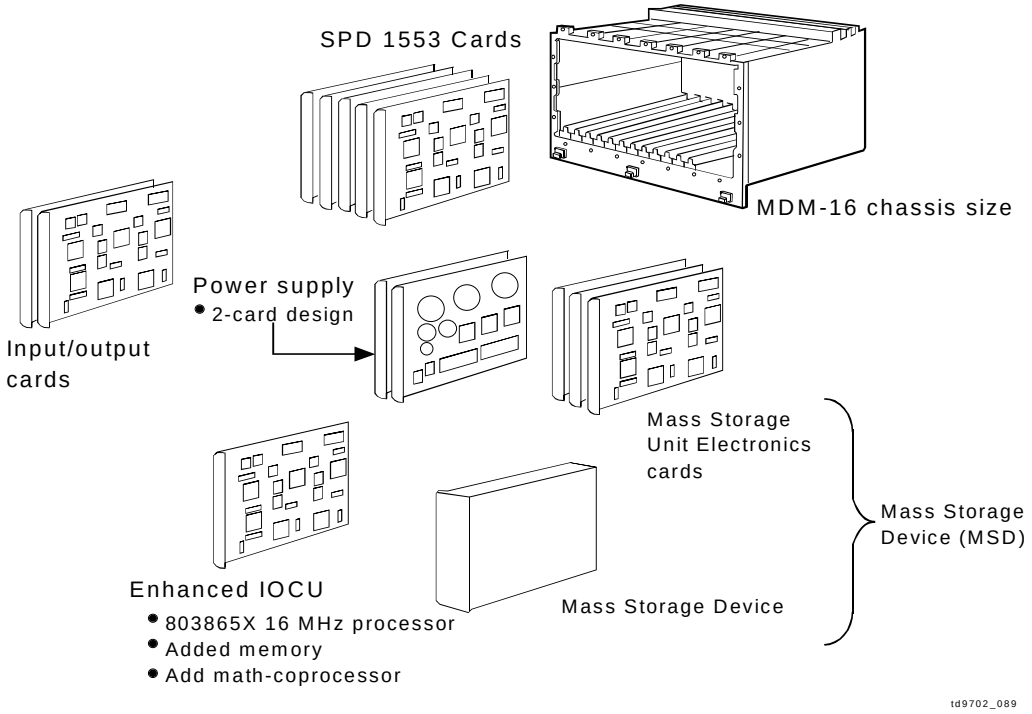

Figure 2-9. Typical CDH MDM

The main processing card for the MDM, called the Input/Output Controller Unit (IOCU), is based on an Intel 80386SX. While a 80386 chip may seem limited in capability, this processing chip was selected because it sufficiently performs required processing, uses less power than newer chips, generates less heat, and fits the space allocated for it on the IOCU card (newer chips have a different shape). Other cards within MDMs include Serial Parallel Digital 1553B (SPD-1553B) cards to control bus communication, various Input/Output (I/O) cards that interface directly with sensors and effectors, and power supply cards. Some MDMs are "enhanced" with a math coprocessor, extra Random Access Memory (RAM), a larger power supply, and can also have a hard drive called a Mass Storage Device (MSD). The MDM in Figure 2-10 is considered an Enhanced MDM because of these additions, and its main processing card is called an Enhanced Input/Output Control Unit (EIOCU). Cards within an MDM are selected and located within the chassis based on the specific needs of that MDM.

An operational consideration relative to MDMs is the anticipated failure rate. Due to the high anticipated amount of radiation hits to MDMs, the current estimate is that 19 MDMs/year at Assembly Complete will have hard failures requiring maintenance. To address this, cards within the MDM are identified as Orbital Replaceable Units (ORUs) and are manifested as spares. Card changeout is an approved maintenance task and crews are expected to changeout the cards on

orbit. Nearly half of these expected failures are for MDMs located outside the Station. Therefore, maintenance on these MDMs requires an on-orbit spare available for the EVA or an EVA to bring the boxes inside the Station and an EVA to return them to their original location.

Figure 2-10 provides a spatial drawing of the U.S. CDH System at 8A. Notice that in a spatial drawing the tier of the MDM is not clear. However, the MDMs still exchange data and commands in the hierarchical fashion even though their physical layout does not imply this. While the MDM's tier cannot be identified, this drawing does show which MDMs are inside or outside the habitable volumes. Specifically, the Node 1 MDMs (N1-1 and N1-2), the external MDMs (EXT-1, EXT-2), the S0 Truss MDMs (S0-1, S0-2) and the Photovoltaic Controller Unit MDMs (PVCU-2B, PVCU-4B) are all located outside the habitable volume. The cards are the same regardless of whether an MDM is located inside or outside. Additionally, MDMs both inside and outside the habitable volume are designed to slowly leak pressure to equalize with their environment. This allows for equalization of the MDM when it is moved into or out of the habitable volume. The MDM also has the capability to be manually equalized by an equalization valve. The chassis is different for outside MDMs due to the need to protect the computer from the radiation and debris environment of space.

REVISIONS		
DATE	NAME	VERSION:

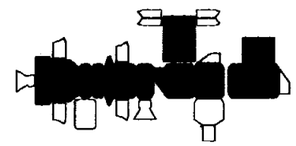

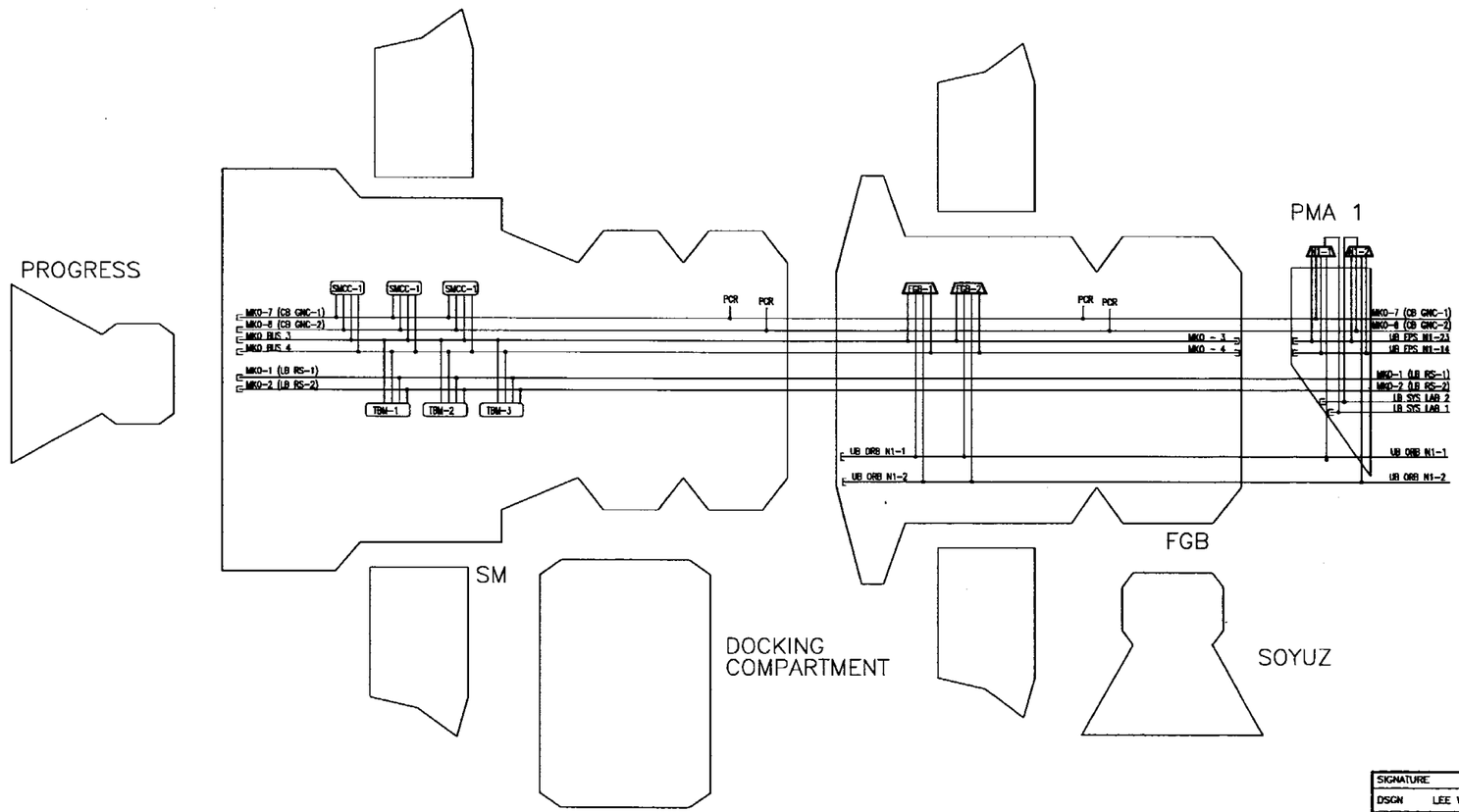

SIGNATURE		DATE
DSGN	LEE WEBSTER	
DR	LEE WEBSTER	12-18-97
ENGR	EMERY REBRESH	
ENGR		
APP		
CAD FILE	CDH1B-OV1-8A	
	PCN	

NATIONAL AERONAUTICS AND SPACE ADMINISTRATION
LYNDON B. JOHNSON SPACE CENTER HOUSTON, TEXAS

COMMAND AND DATA HANDLING
LEVEL 1B OVERVIEW

PROGRAM	SIZE	DWG NO.	REV
ISS	D	CDH1B-OV1-8A	–
SCALE NONE		SHEET 1 OF 2	

[CDH1B-OV1-8A]

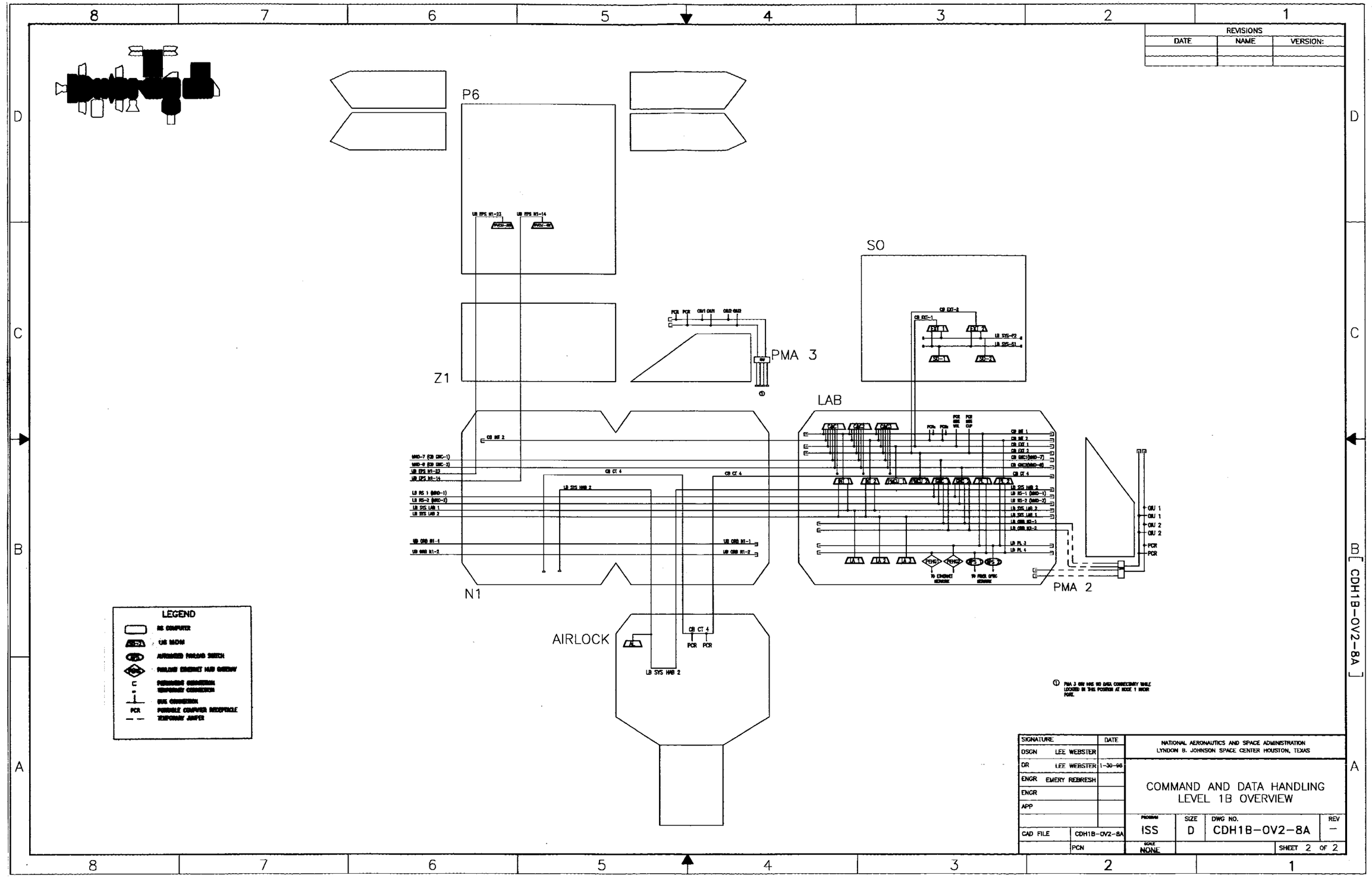

Figure 2-16. Spatial CDH Graphic

1553B Buses

The MDMs exchange data and commands between themselves via 1553B buses. These are shown in Figure 2-8 as vertical and horizontal lines. They are referred to as 1553B buses because they adhere to the bus protocol established in the Military Standard Number 1553B. While Figure 2-8 only shows the buses used between MDMs and other key computer system components, 1553B buses are also used on Station for communication between a CDH MDM and "smart" components in other, non-CDH Systems. These are depicted as bus "stubs" on the drawing. Smart components are those which have the ability to process their own information, such as firmware controllers.

A 1553B bus consists of two twisted, shielded pairs of copper wires. Figure 2-11 depicts the difference between a Station bus and a channel; these terms are often confused. (Unfortunately, industry bus/channel terminology is exactly opposite of Station terminology). For Station, each 1553B bus consists of two channels, each channel consists of a pair of copper wires. The two channels provide redundancy, but only one channel is active at a time. If one channel fails, the other is available to take over communications. Channel changeover is supposed to occur with minimal impact to operations. Typically, the two channels of a bus are physically routed separately within a module to enhance redundancy. For example, Channel A is in one standoff, Channel B is in another. However, they are routed together through the bulkhead.

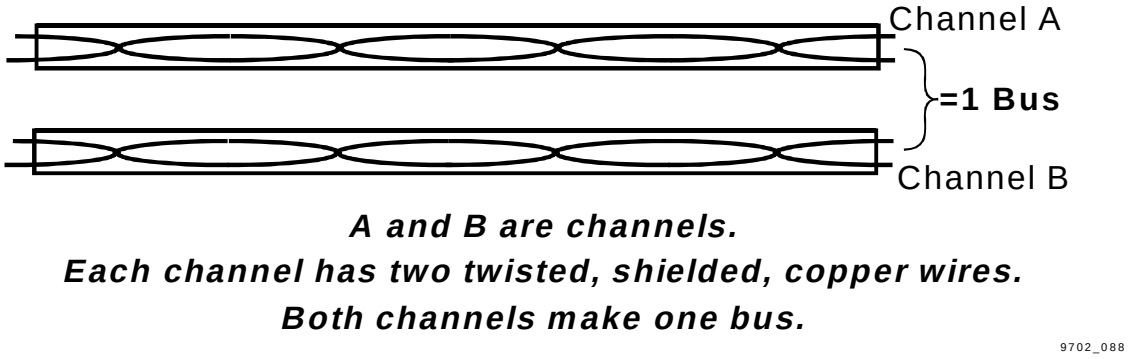

Figure 2-11. Bus versus channel

Communication occurs on buses in one direction at a time, and it must be precisely timed to prevent collisions. The speed of the bus is quite slow, 1 Megabit/second (as compared to fiber optic networks which operate at approximately 100 Megabits/second), but it follows the Military Standard 1553B protocol. Although speed is sacrificed by using this protocol, there are several positive reasons for using the 1553B bus. Specifically, the 1553B is well-proven in space. Additionally, it has significant built-in redundancy capabilities that make it a good choice for space applications.

The bus naming convention used in the CDH System and represented in Figures 2-8 and 2-10 is as follows: there are three parts to the bus name; the first part indicates the tier of the bus, CB for control bus (Tier 1), LB for local bus (Tier 2), and UB for user bus (Tier 3). This is followed by the connectivity below it, such as INT for the internal MDM or EPS for electrical components.

The final part of the bus name indicates the number of the bus if there are multiple buses. Therefore, examples of bus names are:

- CB GNC-1 is control bus number 1 connected to the GNC MDM
- LB PL-3 is local bus number 3 connected to the payload MDM.

Payload Network Components

The payload network components include payload MDMs (PL-1, PL-2), the payload 1553 buses, the Automated Payload Switch (APS), the Payload Ethernet Hub Gateway (PEHG-1 and PEHG-2), and additional ethernet and fiber optic payload networks. These additional buses are not shown in this drawing. The payload components provide the ability to switch between the payloads and different networks. This allows for faster and more efficient data collection needed for payloads.

2.6.1.3 *CDH Software*

At Assembly Complete, the U.S. segment alone has over 300,000 parameters. This compares to a total of approximately 12,000 parameters for a typical Shuttle flight. Extensive telemetry was designed into the Station vehicle because of the Station's long design life and the need to complete maintenance on orbit, as well as the desire to gather as much data as possible from the long duration environment. However, managing this large volume of data requires extensive software capabilities. Note that as described previously, many MDMs contain system-specific application software. This software is considered part of the system it supports, not CDH System software, and is therefore not covered here. There are four major operational points which are consequences of the CDH software design. These points require further explanation and will be covered in the section following. Specifically and briefly, these points are:

a. **Telemetry**: The crew has access to any data in the C&C MDM providing that there is a display item associated with it. This means the Station crewmembers have significantly more insight into Station systems than the Shuttle crewmembers have into Shuttle systems.

b. **Commands:** To aid in troubleshooting across the highly distributed, complex CDH System, command response indications are provided to crewmembers via the PCS Command/Details Display. (A command response is a response provided from each MDM acting on a command, indicating the acceptance or rejection of that command.)

c. **Time Synchronization:** As mentioned earlier, bus communications need to be precisely timed and "synchronized" across CDH. Because of the large amount of telemetry, the precise timing of the computers is used to collect data at three different rates: 10 Hz, 1 Hz and 0.1 Hz. To ensure correct data is available to fill PCS displays, MDM time synchronization is critical. Because of this, there are time management capabilities available to crewmembers and controllers through CDH displays.

d. **Automated Fault Detection, Isolation and Recovery:** The CDH software has two major types of automated FDIR capabilities; one declares bus failures and the other declares MDM failures. Crewmembers or MCC-H can enable or disable either of these automated FDIR

capabilities. Enabling and disabling FDIR software is used extensively during Station assembly operations.

CDH Software - Telemetry

To better understand the major operational consequences above, it is necessary to describe background information on how the CDH System software works. To gather telemetry, the CDH System uses the MIL STD 1553B protocol combined with pre-defined Station input/output bus profiles. Key terms from the MIL STD 1553B protocol that are used throughout the CDH System and displays are defined in Table 2-4.

Table 2-4. Key terms from MIL STD 1553B protocol

MIL STD 1553B Term	MIL STD 1553B Definition
Terminal	The electronic module necessary to interface the data bus with the subsystem and the subsystem with the data bus.
Bus Controller (BC)	The terminal assigned the task of initiating information transfers on the data bus.
Remote Terminal (RT)	All terminals not operating as the BC.
Command/Response	Operation of a data bus system such that RTs receive and transmit data only when commanded to do so by the BC.
Broadcast	Operation of a data bus system such that information transmitted by the BC or a RT is addressed to more than one of the RTs connected to the data bus.

The Station CDH operates in a command/response manner. Bus Controllers control all bus traffic. Remote Terminals do not put data on the bus unless requested to do so by the Bus Controller. Within the CDH-tiered architecture, higher Tier MDMs are Bus Controllers to the lower tier Remote Terminal MDM below it. As an example, referring back to Figure 2-8, if the Tier 1 C&C-1 MDM, the Tier 2 INT-1 MDM, and the Tier 3 LA-1 MDM are all primary MDMs processing data, C&C-1 is the Bus Controller and INT-1 is the Remote Terminal on the bus connecting the two MDMs, CB INT-1. The INT-1 MDM can only send information on the bus if the C&C-1 MDM asks for it. Similarly, INT-1 is the Bus Controller and LA-1 is the Remote Terminal on the bus connecting these two MDMs, LB SYS-LAB 1. Notice that the Tier 2 INT-1 MDM is a Remote Terminal to the bus above it and a Bus Controller to the bus below it at the same time. This is accomplished through different cards within the MDM, and is common with Tier 2 MDMs.

While the above CDH example uses only MDMs, RTs can also be smart components from other systems that communicate with an MDM over a 1553 bus such as the PCSs, transponders in the Communications System, or CMGs in the GNC System. While RTs can be components from other systems, to be a BC, the component must be an MDM.

Therefore, BCs request data from RTs and this process repeats through the CDH System. This is how telemetry is moved up through the CDH architecture. The most recent telemetry is stored or passes through an area of memory within each MDM called the Current Value Table (CVT). When new telemetry is placed in an MDM, it overwrites the previous telemetry. A higher-tier MDM requests telemetry from the CVT of the MDMs below it and puts it in its own CVT. The highest tier CVT is that in the C&C MDM. It is from this CVT that display data and data to be downlinked is selected. However, when new data is put in a CVT, the MDM does not check whether the data is good. Also, the CVT does not monitor whether the data is missing or stagnant. Therefore, Station displays are unable to indicate stagnant data because the CVTs throughout the CDH System do not monitor this.

CDH Software - Commands

As previously described, RTs do not put information on the bus unless asked to do so by a BC. The PCS is an RT to the C&C MDM and certain other MDMs. Because the PCS is an RT, when the crew issues a command from the PCS, the PCS holds the command until the BC (C&C MDM) polls the RT (PCS) for commands. The oldest command is then sent to the BC (C&C). This BC polling and PCS RT response is done at the rate of once per second, per PCS. Therefore, each PCS can send a maximum of one command per second.

The crew receives both positive and negative command responses from each MDM that the command passes through. This information does not tell whether the command was executed, only that it was accepted or rejected. A sample Command/Details display with a command response window is shown in Figure 2-12.

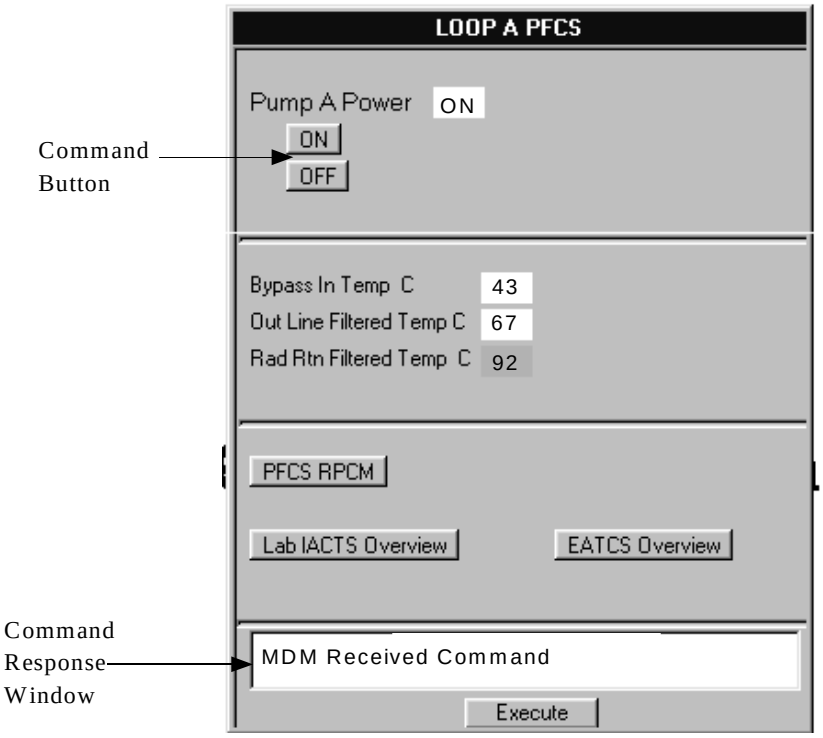

Figure 2-12. Sample Command Window

CDH Software - Time Synchronization

As stated previously, the MDMs collect data in the CVTs at three different rates: 10 Hz, 1 Hz, and 0.1 Hz. C&C MDM CVT data is also recorded by the Zone of Exclusion (ZOE) Recorder in the Communications System. The selection of data that the RT is commanded to send at a specific time is determined by a predefined Input/Output Bus Profile. There is one bus profile per bus. The bus profiles are made up of processing frames that contain all the planned BC commands and RT responses. One processing frame equates to a data collection rate of 10 Hz. Therefore, telemetry that is gathered at only 1 Hz is pre-defined in the Input/Output Bus Profile to be collected once every 10 processing frames. More detail on processing frames can be found in the CDH Training Manual.

To ensure all MDMs are time synchronized, the BC sends out a "broadcast" time message at the beginning of every processing frame. MDMs that are RTs on the bus adjust their local time to that of the BC received time, and compensate for the travel time down the bus. If the computers get out of sync, two things can happen: 1) MDMs could be unknowingly putting the wrong data in the CVT resulting in incorrect data on PCS displays or 2) data collisions can occur, temporarily resulting in invalid data.

CDH Software - Automated Fault Detection, Isolation, and Recovery

As described earlier, two types of automated FDIR software are available onboard. The first type, called Bus FDIR, is a common set of software located in the memory of all MDMs that act as BCs. The Bus FDIR software automatically detects three things: channel failures, loss of bus communication from a RT, and loss of bus communication from the BC. Channel failures result in automatic channel switchover, which makes the redundant channel active. For example, if bus communication is using Channel A and this channel fails, bus FDIR automatically switches over communications so that Channel B is the active channel. If the second channel fails then that bus is considered failed. The automatic switchover can be enabled or disabled by the crew or MCC-H.

The second type of automated FDIR software is referred to as Remote Terminal (RT) FDIR. This type of FDIR handles MDM failures such as loss of communication, or total loss of the MDM. Generally, RT FDIR is dependent on the tier of the MDM (its redundancy). Therefore, for Tier 1 and 2 MDMs, the RT FDIR determines the type of failure and switches to a redundant MDM if appropriate. Due to the complex hardware/software redundancy of Tier 3, the Tier 3 RT FDIR typically varies by MDM. Please see the CDH Training Manual for a more detail description of FDIR.

While the key aspects of the CDH software have been described, there are many other aspects to this software such as data dumps, data loads, extended data dumps, file transfers, application software configuration, Power on Self-Tests (POSTs), and Built-In Tests (BITs). All of these capabilities significantly affect operations. Descriptions of these topics can also be found in the CDH Training Manual.

2.6.1.4 *CDH Interfaces to Other U.S. Systems*

The interfaces between CDH, the U.S. Electrical System, the U.S. Thermal System, and the communication system are designed to maximize redundancy and minimize cascading failures.

At 8A, there are two independent solar array power channels. These channels provide power to CDH based on MDM redundancy. Typically, the first instance of MDMs, such as C&C-1, INT-1 and PMCU-1 are all powered by one power channel. Redundant MDMs (such as C&C-2, INT-2 and PMCU-2) are powered by the other channel. Power channel sources for Tier 3 MDMs are based on the unique redundancy of those MDMs. Additionally, each MDM has its own software-controlled power switch, called a Remote Power Controller (RPC), that allows operators to power the MDM on or off. Since an unpowered MDM cannot close its own power switch, the switch is controlled by another MDM.

Thermal interfaces for CDH components vary whether the component is outside or inside the habitable volume. Most MDMs located outside have simple strip heaters within the box as well as separate baseplate survival heaters located outside the box. The strip heaters are considered part of the MDM and are controlled by the MDM containing the heater. The baseplate survival heaters are powered by a different power channel than the MDM they are heating. They are also controlled by a separate MDM. The Node 1 MDMs located externally on the Node 1 shell are unique since, in addition to survival heaters, they have radiators attached to them. In certain Station attitudes, the Node 1 MDMs require cooling which is provided by these radiators.

The MDMs within the lab use the Thermal Control System's (TCS's) two internal thermal cooling loops: a moderate temperature loop and a low temperature loop. All MDMs located inside the lab are mounted on coldplates which are cooled by the moderate temperature loop. Should the moderate temperature loop pump fail, the two thermal loops can be interconnected to maintain cooling to the MDMs. Therefore, thermal redundancy is provided to the internally located MDMs which are all actively cooled by the same moderate temperature loops.

The majority of the interfaces to the communications system are through the C&C MDMs. Data and commands are exchanged over the CB CT buses. The C&T System receives/sends 1553 information to the C&C MDM and handles the processing of the data for RF transmission to the ground within its own components. The ZOE recorder provides another interface between the two systems. This C&T component records key Station data on a continuous 107-minute cycle and stores the information in the C&C MDM. After a ZOE, MCC-H can request that the recorded data be dumped to the ground for analysis.

2.6.1.5 *CDH Assembly*

The final aspect of CDH is the buildup of the system. As seen in Figure 2-12, the majority of the CDH components, including the C&C MDMs are located in the lab. This hardware is not available prior to the lab flight on 5A. Therefore, the Station needs an alternative computer system to handle the Station prior to lab activation. This system is called the "Early CDH" System and is based on the Node 1 MDMs. From 2A until 5A activation of the C&C MDMs, the Node 1 MDMs control the U.S. CDH and interface directly with the Russian computers. The software in the node MDMs is a minimum set of software required to get to 5A activation. If all

three C&C MDMs fail after the full activation of the CDH System, the node MDMs can take over control of the U.S. CDH with very limited capabilities. Another key aspect of the early CDH is the interface to the Orbiter Interface Unit (OIU) which acts primarily as a RT to the Node 1 MDM. More details on Early CDH and the OIU can be found in the CDH Training Manual.

2.6.2 Russian Computer System

2.6.2.1 *Russian Onboard Computer System Architecture*

The Russian Onboard Computer System can be conceptually viewed, in a similar fashion to the way we view the U.S. CDH System as having three tiers of computers. However, the Russians do not officially refer to them as tiers. It is important to note that there are other components outside the Russian OCS that drive effectors, read sensors, and operate the Russian Segment of the Station, (e.g., Onboard Computer Control System, Onboard Measurement System, etc.). The U.S. CDH System only interfaces to the OCS portion of the Russian Segment, so that is the focus of this section.

Additionally, while the U.S. CDH System uses a highly distributed approach for the lower tier computers, the Russian Onboard Computer System uses a module-based approach. Figure 2-13 depicts a functional drawing of the Onboard Computer System. Notice that the Onboard Computer System has a central computer located in the Service Module (SM) which connects to a two-tier computer system within the SM and a separate computer system with the FGB. The modular approach allows for the FGB and SM computer systems to be generally self-sufficient. The U.S. CDH, due to its integrated nature, does not have the capability for independent computer systems.

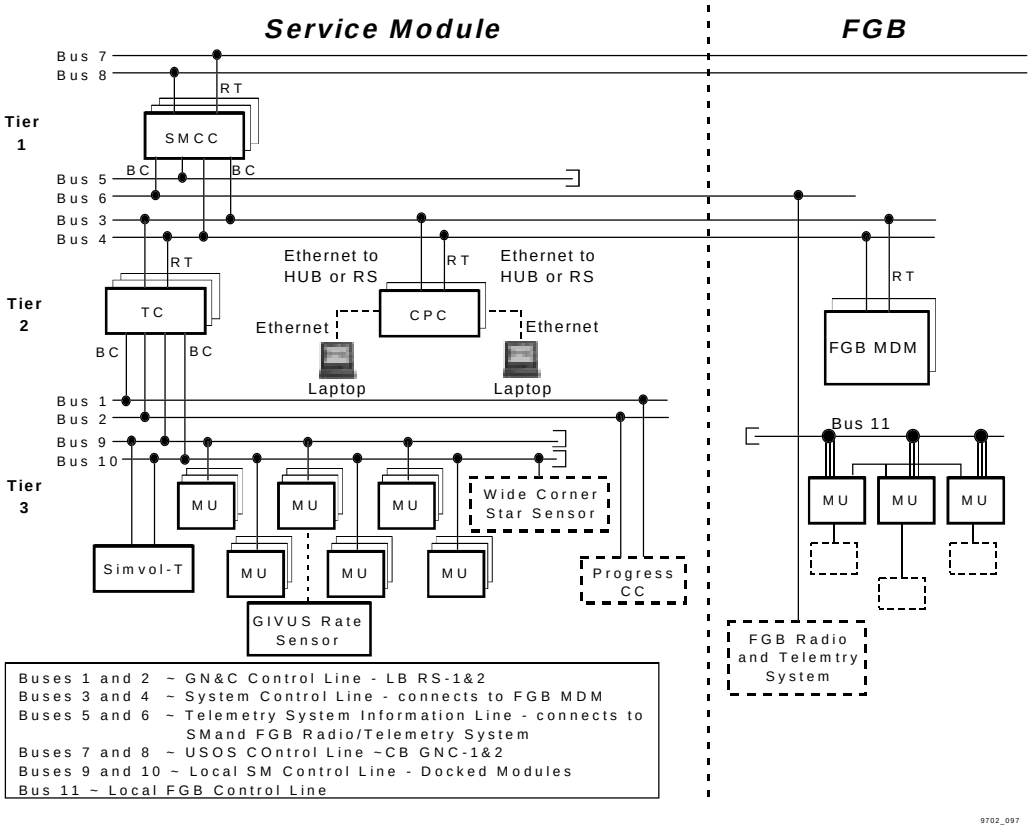

Figure 2-13. Functional drawing of OCCS

At 8A, the Onboard Computer System has approximately 33 computers and is a logical update from the Mir Onboard Computer System, with the major change being an increase in electronic control of the Russian modules through computer displays. The SM Central Computer (SMCC) is similar to the Tier 1 U.S. C&C MDM as it also provides the interface to the crews and controllers. As identified in Table 2-2, crewmembers interface to the SMCC via the fixed Control Post Computer (CPC) or via Russian laptops. Notice from Figure 2-17 that the Russian laptops use an ethernet cable to connect to the CPC which then connects to the SMCC via a standard data bus. As in the U.S. CDH, crews and MCC-M controllers are only able to access data that has been passed to the SMCC. Russian computers communicate over databases which use the Russian GOST 26765.52-87. This protocol is the Russian version of MIL-STD 1553B and is essentially the same protocol.

The two-tiered SM computer system is similar to the Tier 2 and Tier 3 computers in the U.S. CDH. The Tier 2 SM computers, referred to as terminal computers, contain module-specific application software and interface to the SMCC as well as to Tier 3 computers called matching units. The matching units interface directly to Russian sensors and effectors.

The FGB MDMs is the only interface for the U.S. CDH System to the Russian Segment before the Service Module arrives. It is a U.S. provided MDM loaded with Russian software. When the U.S. C&C computers arrive, they have a direct connection to the Service Module central computers.

From Figure 2-13 it is clear that beyond Tier 1, the Russian computer system has more redundancy than the U.S. CDH. There are three redundant SM central computers, which take in the same data, process it with identical software, and utilize a voting scheme on the output to ensure data integrity much like Shuttle GPCs. There are also three redundant terminal computers that use a similar voting scheme as the SMCCs. The matching units are also triple redundant.

2.7 Multisegment Data Exchange

As described earlier, there are multisegment data buses that are used to communicate between partner computer systems. All International Partner (IP) computer systems exchange key health and status data. Additionally, electronic C&W information is exchanged between all partners and is therefore available to all partner crew interface computers for display. All information exchange between segments is done using the MIL-STD 1553B protocol and a pre-established Input/Output Bus Profile for the specific multisegment bus.

At 8A, the only partner interface is the one between the Russian OCCS and the U.S. CDH. As seen in Figures 2-8, 2-10, and 2-13, there are two multisegment buses between the C&C MDMs and the SMCCs. They are referred to as CB GNC-1 and CB GNC-2 in the CDH System and Bus 7 and Bus 8 in OCCS. These buses exchange top level health and status information for all systems, including Station moding commands. All data exchanged is available for display. The GNC System on Station is unique because it is the only system to exchange information directly between Tier 2 Russian and U.S. computers. This is because the Russian and U.S. GNC Systems operate so integrally to each other and must coordinate overall Station GNC operations. The buses between the U.S. GNC MDMs and the SM Terminal Computers are called LB RS-BUS 1 and LB RS-BUS 2. Specific data exchanged includes state vector, attitude, and mass properties. If the data is moved up to the Tier 1 computers, then this data is also available for display. Detailed descriptions of this GNC multisegment data can be found in the GNC Training Manual.

A unique aspect to Russian and U.S. computer system interfaces is associated with the Russian and U.S. communications systems. The Russian communication system provides for transmission of data and commands between the Russian segment computer system and MCC-M. The U.S. communication system provides for transmission of data and commands between the C&C MDM and MCC-H. However, each partner segment can also send commands and receive data from its computer system via the partner's control center and communication system. For example, MCC-H can send a command to MCC-M which is transmitted over the Russian communication system to the Russian computer system and to the C&C MDM using the multisegment buses. More detail on this capability is provided in the Communications Training Manual.

2.8 Summary

The ISS has Station level control software consisting of seven modes: standard, microgravity, reboost, proximity operations, external operations, survival, and ASCR.

The ISS has seven different types of crew interface computers at 8A: PCS, SSC, Russian laptop, CPC, payload laptops, robotics workstation, and Crew Health Care laptops.

The four classes of C&W alarms are emergency, warning, caution, and advisory. Alarms are indicated based on their class in three different ways on Station: lights on the partner C&W panels, tones through the partner communication systems, and text/graphics at the PCS and Russian laptop.

The U.S. CDH follows a distributed, three-tier architecture: Control, Local, and User tier MDMs. The Control Tier or Tier 1 has the least amount of MDMs, offers the only crew and ground interface to the system and is two fault tolerant. Tier 2, the Local Tier, executes system specific software, is an interface for firmware controllers and generally has single fault tolerant MDMs. The lowest tier, Tier 3, has the most number of MDMs and is the least redundant. It is also the sensor and effector interface point.

MDMs and buses have an established naming convention. MDM nomenclature uses an abbreviation of the primary function of the MDM followed by an indicator of the instance of the MDM. Examples include the C&C-1 and the GNC-2 MDMs. Buses have three parts to their name: the tier of the bus, the connectivity below it, and the number of the bus if there are multiple buses. Examples include CB GNC-1 and LB PL-3.

The design of the CDH software results in four key operational considerations. First, crewmembers have insight to a lot more data than past space programs and potentially more insight than MCC-H. Also, stagnant data is not clearly delineated on displays. Second, crewmembers have insight into both positive and negative command responses as a command travels through the CDH System. MCC-H only has insight into negative command responses. Third, the time synchronization design of the 1553B buses results in three data collection rates: 10 Hz, 1 Hz, and 0.1 Hz. The slowest rate is probably noticeable to the user. Fourth, automated bus and RT FDIR are available on Station. Both capabilities can be enabled/disabled by operators.

The Russian OCCS and U.S. CDH computer system architectures are very similar in that both systems can be conceptually viewed as having three tiers of computers. However, the Russian segment does not officially refer to them as tiers. Additionally, while the U.S. CDH System uses a highly distributed approach for the lower tier computers, the Russian OCCS uses a module-based approach. The Russian OCCS is designed using a self-sufficient, FGB and SM module based architecture. Each module based computer system interfaces to a central computer. Both designs provide redundancy, with the OCCS having greater redundancy below Tier 1 than the U.S. CDH.

The OCS and U.S. CDH interface via several 1553B multisegment data buses. System health and status information, mode commands, and detailed GNC data is exchanged.

Questions

1. Which mode transitions can the Station level control software automatically execute?
2. Which types of crew interface computers can be used to manage Caution and Warning?
3. What Caution and Warning indications are received when a fire occurs?
4. A crewmember can directly command a Tier 3 MDM.
   a. True
   b. False
5. Describe what the following bus names mean: CB CT 4, UB ORB N1 2
6. What action can be expected from the CDH System if the EXT-1 MDM fails? If LA-3 fails? (i.e., What type of redundancy does the system offer to cover these failures?)
7. What are the names of the data buses that exchange information between the SMCCs and the C&C MDMs? Which buses exchange information between the SM Terminal Computers and the U.S. GNC MDMs? (Refer to Figure 2-8)

Section 3
Electrical Power System Overview

3.1 Introduction

The International Space Station (ISS) requires electrical power for all ISS functions: command and control, communications, lighting, life support, etc. Both the Russian Orbital Segment (ROS) and U.S. On-orbit Segment (USOS) have the capability and responsibility for providing on-orbit power sources for their own segments, as well as power sharing, as required, to support assembly and ISS operations for all International Partners. ***The ROS and USOS Electrical Power Systems (EPSs) are responsible for providing a safeguarded source of uninterrupted electrical power for ISS***. To accomplish this, the EPS must generate and store power, convert and distribute power to users, protect both the system and users from electrical hazards, and provide the means for controlling and monitoring system performance. These functions are performed by several pieces of interrelated ISS hardware/software, which are each discussed in detail in the ISS Electrical Power System Training Manual (TD9707). However, to provide the proper context for the detailed discussion, it is helpful to take a "big picture" look at the EPS system, its responsibilities, architecture, and components.

Note that the scope of this familiarization manual is the Flight 8A configuration. At the 8A assembly stage, both the ROS and USOS EPSs generally have sufficient power generation capability to meet their segment power demands, although power transfer is performed, as required. This manual focuses on the USOS EPS but includes descriptions of the ROS EPS, in particular, noting the similarities and differences between the two power systems.

3.2 Objectives

After completing this section, you should be able to:

- Describe how the EPS architecture provides for power generation, storage, distribution, conversion, and supporting functions
- Describe the EPS interfaces to other systems
- Identify differences and similarities between the ROS EPS and USOS EPS
- Identify the primary methods of generating power for the Flight 8A configuration.

3.3 USOS EPS Functional Design

The USOS EPS is designed to be a distributed power system; i.e., power is produced in localized areas and then distributed to various modules. As illustrated in Figure 3-1, this functional design is similar to the process used by municipal electric utilities to provide electrical power to users.

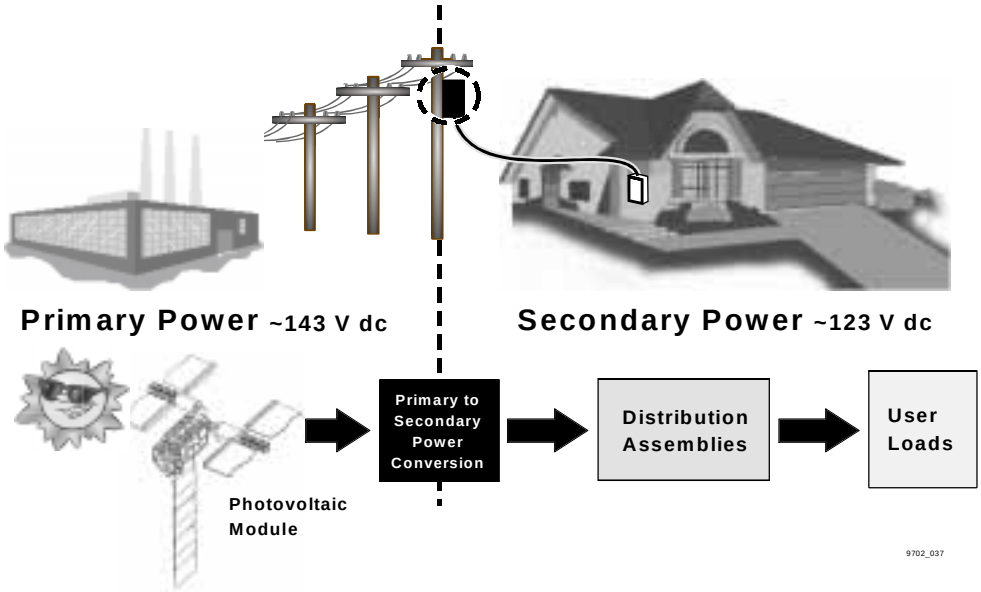

Figure 3-1. Analogy between municipal electric utilities and ISS EPS

- High voltage power or "primary power" is generated in a centralized power plant and distributed throughout the area via transmission lines.
- Before power is delivered to users, the voltage is stepped down by a transformer to the user-required regulated voltage level.
- "Secondary power" (power transmitted at the user-required voltage level) is distributed to nearby locations and is further divided and routed by distribution boxes to provide electricity to many individual users.

An analogous process is used on ISS. USOS EPS design incorporates modules (called Photovoltaic Modules (PVMs)) that are dedicated to generating and storing power. These modules or "power plants" provide two sources of primary power (~160 V dc) called power channels. During both insolation and eclipse, each power channel provides a continuous supply of power for distribution throughout ISS. Primary power is then converted to secondary power (~124 V dc) in proximity to its intended users. From the converters, secondary power is distributed along a variety of paths to individual ISS power users. This two-level power system allows EPS to compensate for factors such as line losses, hardware degradation, and solar array aging within the primary power system while providing consistent secondary voltage for ISS users. Per this distributed design, primary power is used when transmission over significant distances is required and secondary power is for distribution locally.

The distributed design of the USOS EPS architecture provides for the incremental buildup of the power system during ISS assembly. ***The PVMs are independent power plants that add to the primary power production capability. The Secondary Power System, on the other hand, is a local power network that is integrated into the trusses, modules, and racks of the ISS***. Thus, the Secondary Power System network expands with each ISS assembly stage to provide new components with power access.

At Assembly Complete, there will be four PVMs (and eight power channels), which are identified in Figure 3-2.

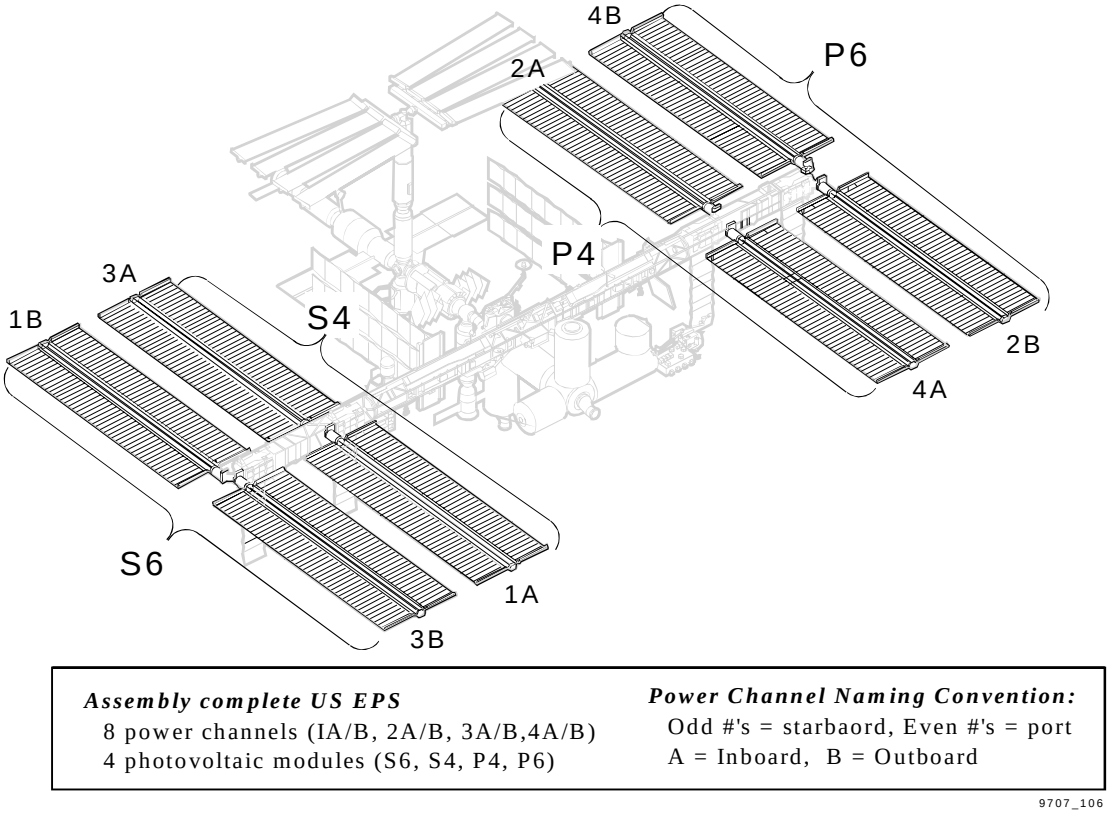

Figure 3-2. ISS at assembly complete

For the Flight 8A scope of this manual, all USOS EPS primary power is provided by the P6 PVM. The P6 PVM arrives on Flight 4A. As shown in Figure 3-3, the P6 PVM is temporarily located on the Z1 truss until it is moved to its Assembly Complete location on the lateral truss at Flight 13A (see Figure 3-2). Secondary Power System components are located on the P6 PVM, Z1 truss, S0 truss, Node 1, PMAs, Airlock and Lab at Flight 8A.

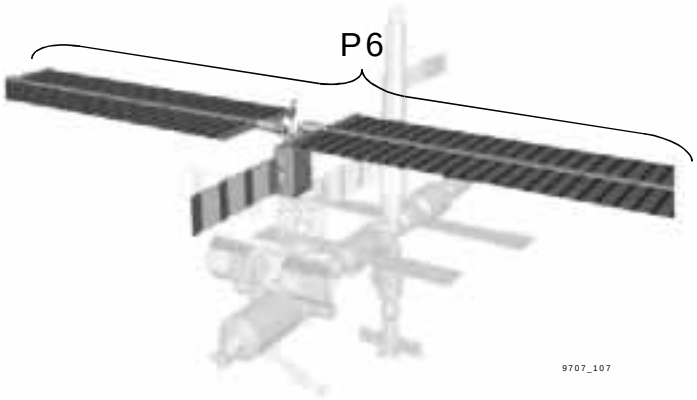

Figure 3-3. ISS at 8A

3.4 USOS EPS Architecture

From the previous description, five core functions can be identified as necessary to achieve the function of the EPS:

- Generate primary power
- Store primary power
- Distribute primary power
- Convert primary to secondary power
- Distribute secondary power to users.

In addition, there are three support functions that must be accomplished:

- Thermal control of EPS components
- Grounding of EPS components and ISS
- Managing and controlling the EPS components and power/energy management.

These USOS EPS functions have been loosely grouped into three main subsystems: Primary Power System, Secondary Power System, and support systems. The entire power system, except for grounding and control, are illustrated in Figure 3-4. The following sections briefly describe each of the three main subsystems, as well as their functions and components.

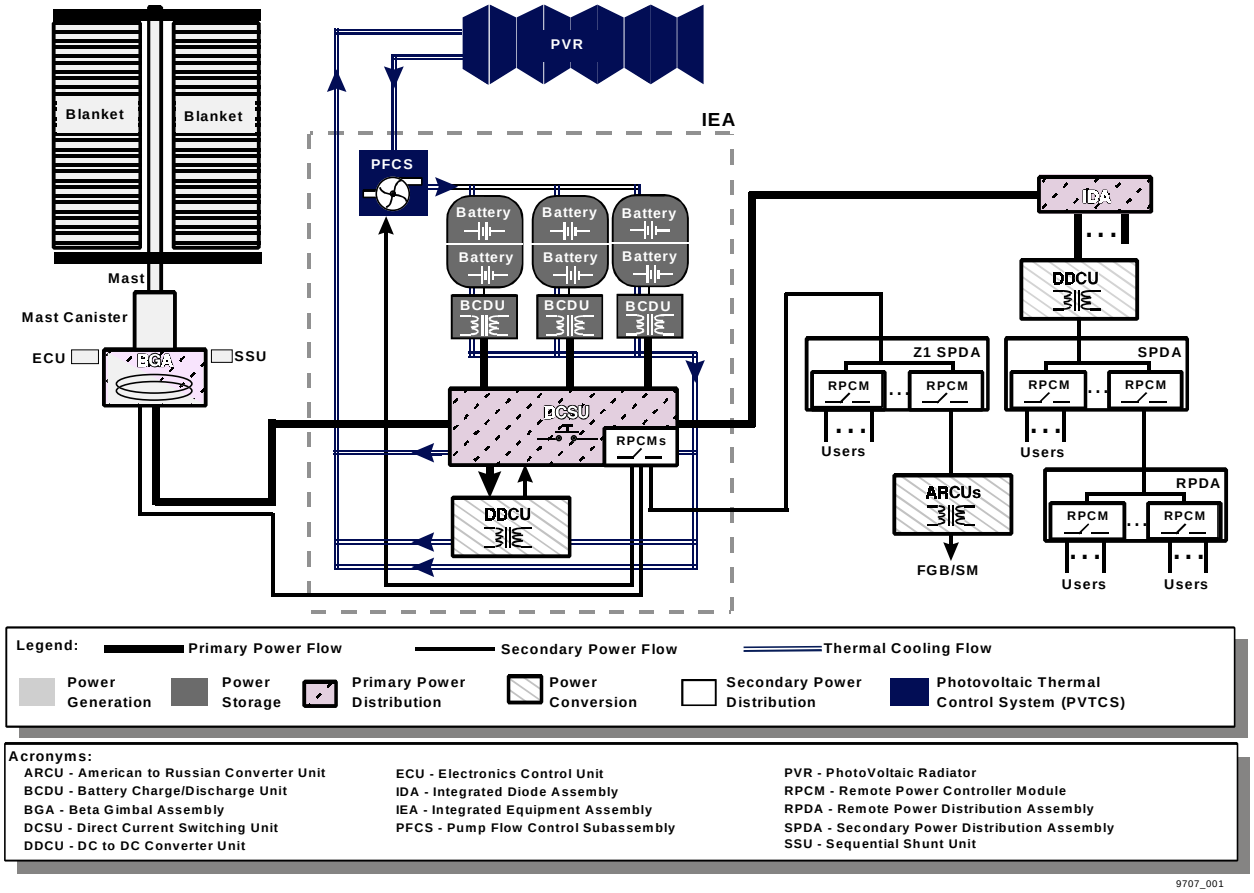

Figure 3-4. USOS EPS schematic

3.4.1 Primary Power System

The basic building block of the USOS EPS Primary Power System architecture is the power channel, which is a group of hardware components, beginning with a solar array, that are responsible for providing an independent primary power source.

At this assembly stage, the entire Primary Power System can be described in terms of a power channel as illustrated in Figure 3-5.

The following components comprise a power channel:

- Solar Array Wing (SAW), including two Photovoltaic (PV) blankets, the right and left blanket boxes, mast, and mast canister
- Sequential Shunt Unit (SSU)
- Beta Gimbal Assembly (BGA)
- Electronics Control Unit (ECU)
- Direct Current Switching Unit (DCSU)
- Three Battery Charge/Discharge Units (BCDUs)
- Three battery assemblies (Two-battery Orbital Replacement Units (ORUs)/assembly).

Though Dc to Dc Converter Units (DDCUs) are generally associated with the Secondary Power System, each power channel also includes a DDCU to provide secondary power for IEA components.

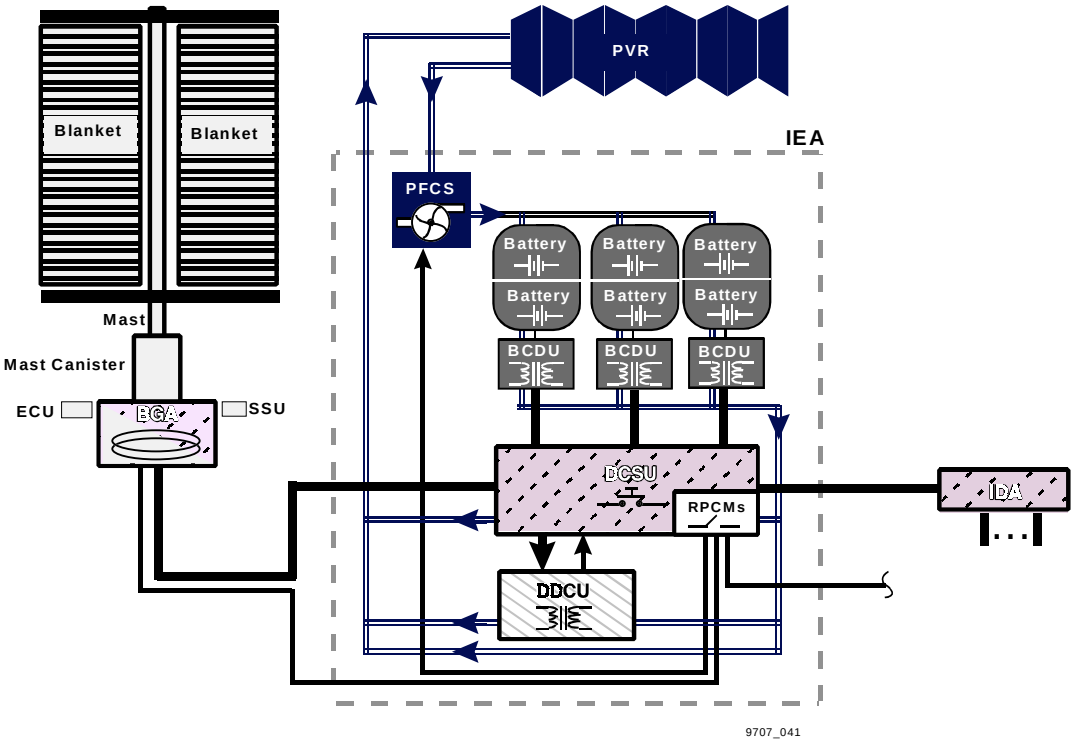

Figure 3-5. USOS EPS power channel

A PVM contains all the components for two power channels; i.e., two sets of PV blankets (see Figure 3-3) and correspondingly two identical sets of power channel hardware. This hardware is

mounted on the Integrated Equipment Assembly (IEA). The IEA, indicated in Figure 3-6, is the truss framework that structurally and electrically integrates the PVM for on-orbit operations. Power channel and support equipment for the two respective power channels are mounted on the "top" and "bottom" of the IEA. The IEA structure also provides integrated cold plates and coolant loops for use by the Photovoltaic Thermal Control System (PVTCS), which is dedicated to removing excess heat from IEA hardware. The thermal radiator for PVTCS can be seen in its deployed state in Figure 3-6.

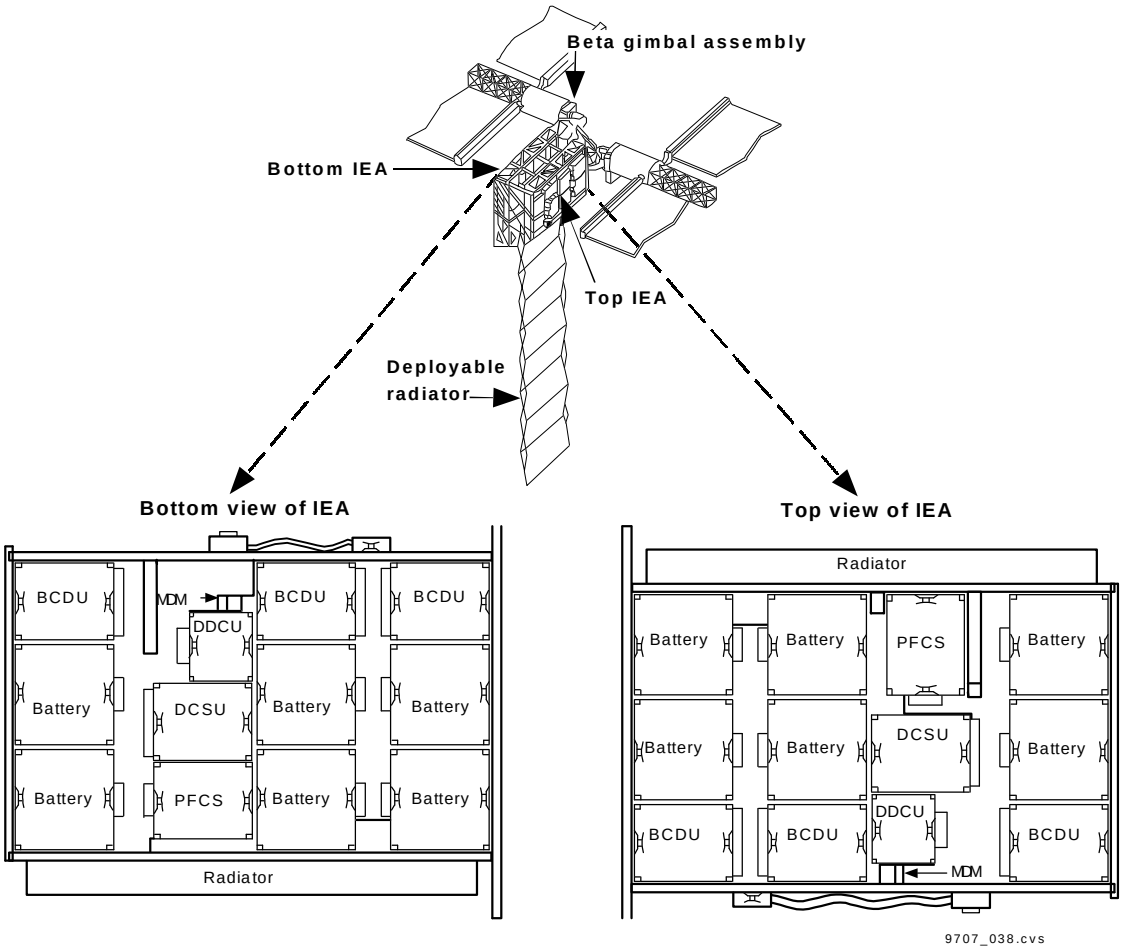

Figure 3-6. Integrated equipment assembly

3.4.1.1 Primary Power Generation

Power generation onboard ISS includes conversion of solar energy to electrical energy, as well as the regulation of that electrical energy. The power generation function is accomplished by the PV blankets and structural support hardware (blanket boxes, mast, mast canister), BGA, ECU; and SSU.

The PV blanket is a collection of PV cells wired in series providing the large light collecting surface required to meet ISS power needs. A pair of blankets (left and right) constitutes a PV array. The PV blankets are supported by blanket boxes (which also serve to house and protect the blankets for launch). Figure 3-7 shows the blankets in a partially deployed state. The blanket boxes are rigidly attached to the mast canister which provides the housing and extension/retraction mechanisms for the mast that are used to support the deployed blankets. In its stowed configuration, the mast is collapsed inside the mast canister; for deployment, the mast extends to the deploy the array. The mast, along with the blanket and containment boxes and other associated hardware, provides the ability to rigidize the deployed PV blankets. Collectively, the left and right PV blanket and containment boxes, and the mast canister with mast, are referred to as the Solar Array Wing (SAW).

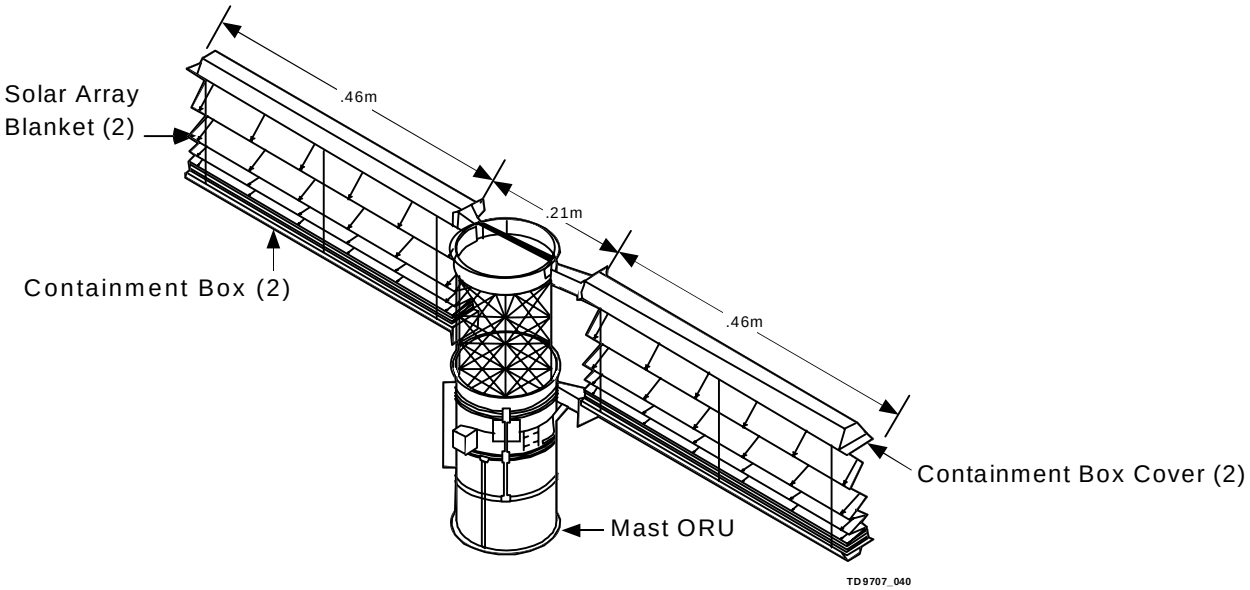

Figure 3-7. Partially deployed solar array wing

In order to maximize the collection of usable solar energy in an orbiting vehicle, the PV arrays must be oriented to face the Sun, or more specifically, to maximize the planar projection of the collection device relative to the Sun. At Flight 8A, the Beta Gimbal Assembly (BGA), indicated in Figure 3-6, is the hardware providing array orientation. The BGA provides for rotation of the PV array around its long axis as required to track the Sun and maximize solar array power production.

The Electronic Control Unit (ECU) located on the BGA is the command and control link for the power generation function. The ECU provides power and control for extension and retraction of the solar array mast, latching and unlatching of the blanket boxes, BGA rotation, and BGA latching.

Regulation of the array output voltage is required because of the performance characteristics of PV cells; i.e., output voltage is a function of the load placed on the cells, resulting in a varying power source (see Section 2 for further details). To accomplish this, the Sequential Shunt Unit (SSU) receives power directly from the PV array and maintains output voltage within a specified

range of 130 V dc to 180 V dc (referred to as "primary power voltage"). By design, the SSU provides a consistent source of power (typically ~160 V dc), based upon a programmable setpoint. All EPS equipment or components that use primary power are designed to accept power within this wide voltage range. The rationale for regulating power within such a wide range is to account for:

- Line losses resulting from transferring power across significant distances on ISS
- Flexibility in regulation to account for downstream hardware degradation
- Flexibility in regulation to account for hardware aging (i.e., solar cell aging results in a significant drop in peak output voltage)
- Output voltage of solar cells that vary significantly as a function of load.

Thus, the SSU considers the above factors, stabilizes the SAW output voltage based upon a voltage setpoint (typically ~160 V dc) and relies upon the Secondary Power System to provide consistent, tightly regulated ~124 V dc secondary power to users for the life of the ISS.

The orientation of the energy collection devices and the regulation of their output voltage are only critical during insolation. The next segment discusses the power storage function which is required to provide power during eclipse.

3.4.1.2 Primary Power Storage

The power storage function is performed by batteries and BCDUs. The actual storage devices are Nickel Hydrogen (NiH_2) battery assemblies, each having their own BCDU to control their State of Charge (SOC). A battery assembly consists of two battery ORUs connected to a single BCDU. As seen in Figure 3-5, there are three battery assemblies and three BCDUs associated with each power channel. As the name of this function and its associated hardware implies, it is responsible for storing power throughout the entire orbit. During insolation, array power is used to charge the batteries. During eclipse, a portion of the stored battery power is discharged to supply the ISS. Stored power may also be used to supplement the power generation function during insolation; i.e., to satisfy a temporary high power load on the EPS or to supply power in case there is a failure within the power generation function (including failure of the SAW orientation function).

With a full complement of batteries (three battery assemblies/power channel), the storage system is designed to require only a 35 percent depth of discharge to supply the nominal ISS power needs during the period of orbital eclipse. Given that the ISS is not exceeding its planned energy consumption, the batteries can then be fully charged during a single period of insolation. ***If the power generation function were to fail, the batteries can supply power for one complete orbit following a period of orbital eclipse with a reduced ISS power consumption rate.*** The charge and discharge profiles must be carefully controlled to maximize the life of each of the batteries. The battery SOC determines the recommended charging profiles used by the BCDUs to regulate the charging of the batteries.

It is important to emphasize that power storage is a function of the Primary Power System and occurs before the primary power is converted into secondary power. This permits a more centralized power storage function (all accomplished on the PVMs) versus a decentralized power storage function as part of every secondary power circuit. This centralized approach results in decreased weight and cost to perform the power storage function.

The power generation and power storage functions provide power sources for the Primary Power System, but power flow must be coordinated between the arrays and batteries, as well as to other components on the IEA and on to the ISS. This interface is provided by the power distribution components.

3.4.1.3 Primary Power Distribution

Primary power distribution for a power channel is the function of the DCSU. Using a network of high power switches called Remote Bus Isolators (RBIs), the DCSU interconnects arrays and batteries to the primary power distribution bus. During insolation, the DCSU routes power from the arrays to the ISS, as well as to the BCDUs for battery charging. During eclipse, the DCSU routes battery power to the ISS to satisfy power demands. In addition to primary power distribution, the DCSU has the additional responsibility for routing secondary power to components on the PVM (e.g., the ECU and other support components). Note that while the P6 PVM is located on the Z1 truss, secondary power produced on the IEA is also routed directly to the Z1 truss for distribution. This secondary power is provided by the DDCU located on the IEA. The DDCU receives primary power from the DCSU, converts into secondary power and sends it back to Remote Power Controller Modules (RPCMs) (see next section) for distribution. The RPCMs are housed within the DCSU as shown in Figure 3-5.

While the DCSU handles power distribution on the IEA, the BGA provides for the transmission of primary power from the PV array to the IEA. The BGA also provides for transmission of secondary power to the ECU. Although it has no switches to control the flow of power, the BGA incorporates a roll-ring design to provide conduits for power (and data), while allowing a continuous 360° rotation.

The DCSU provides one output of primary power from a power channel. While the P6 PVM is located on the Z1 truss, further distribution of primary power from power channels 2B and 4B to various areas of the ISS is accomplished by Integrated Diode Assemblies (IDAs) located on the Z1 truss (shown in Figure 3-5). From the IDAs, primary power is input to the Secondary Power System for conversion and distribution of power to users. The Secondary Power System is the subject of the next section.

3.4.2 Secondary Power System

The Secondary Power System is illustrated in Figure 3-8. The first step in the local power distribution is the conversion from primary power (~160 V dc) to secondary power (~124 V dc). ***Power conversion occurs in various areas throughout the ISS, within pressurized modules, on truss segments, as well as on the IEA, i.e., near wherever users require secondary power***. After conversion, secondary power is distributed through a network of power distribution assemblies. The active components within these distribution boxes are remotely commanded

switches that control and monitor the flow of power through the network to individual *users*, such as systems, payloads, crew equipment, EPS components, etc.

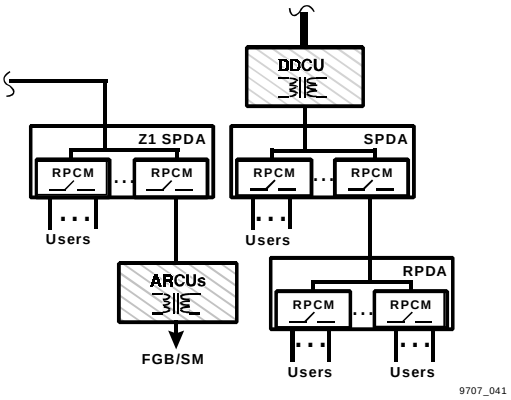

Figure 3-8. USOS secondary power system

3.4.2.1 Secondary Power Conversion

The secondary power conversion function uses one type of ORU, the DDCU. As the name implies, the DDCU is responsible for dc power conversion, in this case, primary power into secondary power using a transformer. Each DDCU has one primary power input and one secondary power output. As discussed earlier, the primary power voltage is typically ~160 V dc but can vary over a wide range, while the output is specified to be ~124 V dc, which is the prescribed voltage for all users of the Secondary Power System. If any other voltage level is required by user loads, (e.g., payloads or crew equipment) then it is the responsibility of the user to perform the conversion from ~ 124 V dc to the required voltage.

3.4.2.2 Secondary Power Distribution

The workhorse of the secondary power distribution system is the RPCM, an ORU, which contains solid-state or electromechanical relays, known as Remote Power Controllers (RPCs). These switches can be remotely commanded to control the flow of power through the distribution network and to the users. There are different types of RPCMs, resulting from varying numbers of RPCs and varying power ratings. As shown in Figure 3-8, secondary power originates in a DDCU and is then distributed through a network of ORUs called Secondary Power Distribution Assemblies (SPDAs) and Remote Power Distribution Assemblies (RPDAs). SPDAs and RPDAs are essentially housings that contain one or more RPCMs; the designation, either SPDA or RPDA, refers to the level of hierarchy within the distribution system As a general rule, the hierarchy dictates that DDCUs feed power to SPDAs, which either provide power to one or more user loads or RPDAs. RPDAs, in turn, feed power to one or more user loads. Note that RPCMs have only one power input; thus, if power is lost at any level of the Secondary Power System, all downstream user loads will be without power. As mentioned previously, there is no redundancy in the Secondary Power System; rather, redundancy is a function of the user's loads. For example, a critical user load may be able to select between two input power sources that use different power channels and thus different secondary power paths.

As with DDCUs, SPDAs and RPDAs may be located internally or externally. Depending on their specific location, SPDAs and RPDAs may interface with EETCS or use heat pipes where EETCS is not available. Recall that RPCMs are also located within the DCSU on the IEAs to provide distribution and control of secondary power to power channel components, as required.

3.4.3 Support Systems

In addition to functions, such as power production, storage, conversion, and distribution, other supporting functions must be incorporated into the architecture to maintain the USOS EPS.

3.4.3.1 Thermal Control

USOS EPS Photovoltaic Modules (PVMs) are designed with their own Photovoltaic Thermal Control System (PVTCS). ***This is necessary because at Assembly Complete, all PVMs are separated from the ISS by 360° rotating Solar Alpha Rotary Joints (SARJs) which pass power and data, but not fluids.*** Thus, PVMs cannot interface with the ISS Thermal Control System (TCS). Each power channel has its own independent PVTCS consisting of one Pump and Flow Control Subassembly (PFCS) ORU and coldplates, coolant lines, and ammonia coolant which are integrated into the IEA. PVTCS also includes one Photovoltaic Radiator (PVR) per IEA, shown in Figure 3-3, which is shared by the two power channels on a PVM. It is important to note that although the two PVTCS cooling loops share a common PVR, the cooling lines do not intersect and thus the PVTCS operate independently.

3.4.3.2 Grounding

Another important factor in the design of the EPS is the grounding scheme to minimize arcing and shock hazards. The grounding function is incorporated in the Single Point Ground (SPG) architecture that maintains all components on the ISS at a common potential. SPG refers to grounding such that all the structures and components within the USOS are electrically tied to a common point (the metal infrastructure of the ISS), minimizing electrical shock hazards to the crew and equipment. Another potential shock hazard exists when equipment such as personal computers are connected to Utility Outlet Panels (UOPs). To eliminate this hazard, Ground Fault Interrupters (GFIs) are installed on all utility outlet panels to detect short circuits and disconnect equipment from the power source.

Although the SPG architecture maintains all components of the USOS EPS at a common potential, this potential may not correspond to the surrounding space environment. As it turns out, the potential difference between the ISS structure and the plasma environment in orbit could be as much as ~140 V dc during insolation. This difference in potential can result in micro-arcing between the space environment and the ISS structure, potentially damaging the arrays or thermal coating that covers the ISS. To minimize this potential difference, Plasma Contactor Units (PCUs) located on the Z1 truss (one operational and one backup) generate plasma from Xenon gas and emit a stream of electrons into space. This electron emission results in a "grounding-strap" that effectively grounds the ISS to the space environment, minimizing the potential difference as well as related hazards to the ISS and crew.

3.4.3.3 Command and Control

Operating behind all of these before-mentioned functions, four tiers of command and control units/applications work to monitor and control the operation of the USOS EPS. Command and control of the USOS EPS is provided by software applications and hardware which provides system monitoring and reconfiguration capabilities from both onboard and the ground. The onboard capability allows the crew to determine system status and provides any required reconfiguration for systems operations. Ground control and monitoring is required to support ISS EPS operations, analysis, and planning.

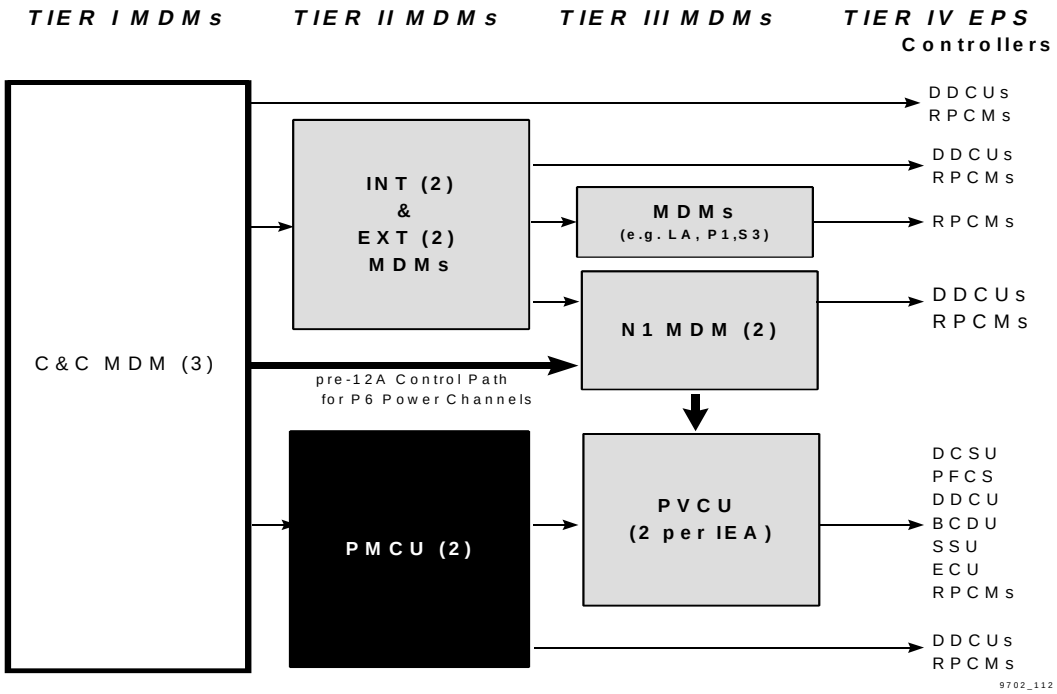

Figure 3-9. Structure of EPS command and control tiered architecture

The tier structure and example responsibilities of the command and control ORUs are illustrated in Figure 3-9. Command and control functions for the top three tiers are performed by computers or Multiplexer/Demultiplexers (MDMs). Tier 1 control is a function of the Command and Control (C&C) MDM (located in the Lab) through which both crew and ground interface all command and control functions. Most of the EPS functionality at the Tier 2 level, is performed by the Power Management Control Unit (two located in the Lab, one backup) and the Node 1 MDM, although other MDMs may have control of particular DDCUs and RPCMs. At this assembly stage, the Tier 3 Node 1 MDM's have Tier 2 responsibilities, including controlling the Tier 3 Photovoltaic Control Units (PVCUs) located on the P6 PVM. Although there is one PVCU per power channel (PVCU-2B, PVCU-4B), one PVCU controls the operations of both power channels on the PVM with the other as backup. Note that the MDMs are generally in close proximity to the equipment for which they are responsible. Tier IV consists of firmware controllers responsible for controlling component functions and providing telemetry to higher tiers.

3.4.4 USOS EPS Redundancy and System Protection

Thus far, the architecture of the USOS EPS has been discussed in terms of how power is provided to ISS users. But equally important functions of the system architecture are redundancy and fault protection.

3.4.4.1 Redundancy

Each of the power channels are preconfigured to supply power for particular ISS loads; however, to provide for power source redundancy, the assembly complete design provides for rerouting (i.e., cross-strapping) primary power between various power channels, as necessary. At Assembly Complete, the USOS EPS will have four PVMs containing eight SAWs and correspondingly eight power channels (shown in Figure 3-2) with full cross-strapping capability. However, through Flight 8A, there is only one PVM and no cross-strapping capability (refer to Section 2). It is important to note that only primary power can be cross-strapped. Once power is converted into secondary power, power flow through the distribution network cannot be rerouted. ***As a result, if there is a failure within the Secondary Power System, there is no redundancy, and the entire downstream path from the failure is unpowered. Instead, redundancy is generally determined by user loads***. Examples are:

- The component may swap between multiple power input sources
- Multiple components perform the same function; thus, the responsibilities of one component are assumed by another
- Multiple components work together to perform a function with the loss of a component, resulting in degraded operational capabilities.

Details concerning hardware redundancy within EPS components is discussed in Section 2.

3.4.4.2 System Protection

System protection encompasses the architecture's ability to detect that a fault condition has occurred, confine the fault to prevent damaging connecting components, and execute an appropriate recovery process to restore functionality, if possible. This process is usually referred to as Fault Detection, Isolation, and Recovery (FDIR). For example, upon detection of a fault, components can be isolated, thereby preventing propagation of faults. In response to overcurrent conditions, the architecture is designed such that each downstream circuit protection device is set to a lower current rating and responds more quickly than the protection device directly upstream. This ensures that electrical faults or "shorts" in the System do not propagate toward the power source. Another function of the architecture's system-protection shuts down the production of power when array output voltage drops below a specified lower-limit threshold. This prevents the Photovoltaic (PV) cells from operating in low-voltage, high-current applications, causing cell overheating. In summary, all the various implementations of system-protection work together to isolate faults or shorts at the lowest level. This approach minimizes impacts to the users of the EPS and also protects the EPS from complete failure from low-level faults.

More details concerning redundancy, system protection, and FDIR are contained in the description of individual components in the ISS Electrical Power System Training Manual.

3.5 USOS EPS Interfaces

The following section describes the USOS EPS interfaces with other systems and power sources.

3.5.1 Power Interfaces

In addition to the power sources inherent to the USOS EPS, other power sources from the ROS, including the FGB and SM, as well as the Shuttle, are required to support various phases of assembly and ISS operations. Thus, power interfaces are required to allow transferring power among the USOS, the ROS, and the Shuttle.

3.5.1.1 Russian - American Power Interface

According to operational agreements, ROS power will support USOS operations early in the Assembly Phase. However, power conversion is required because the user-voltage level required by the USOS is ~124 V dc and the FGB EPS provides power at ~28 V dc. This function is accomplished by the Russian-to-American Converter Unit (RACU). Similarly, per operational agreements, USOS will provide power to the ROS, which also requires conversion. The American-to-Russian Converter Unit (ARCU) transforms the ~124 V dc power produced by the USOS EPS into the ~28 V dc power for use by the FGB EPS. Both the ARCUs and RACUs, located on the FGB and SM, are under Russian command authority.

3.5.1.2 Shuttle Power Conversion

The USOS EPS will also be supported by the Shuttle when it is docked to the ISS. Although the Shuttle power system generates ~28 V dc, Assembly Power Converter Units (APCUs) located in the Shuttle payload bay can provide either primary (~140 V dc) or secondary (~124 V dc) voltage per the requirements for the particular mission. However, the voltage level is reconfigured on the ground and cannot be changed on orbit. For example, the APCU is configured to output primary power for Flight 4A to support power channel startup operations but configured to output secondary power for the MPLM on its Shuttle flights. Commanding of the APCU (on/off) is performed by the Shuttle crew on orbit.

3.5.2 Systems Interfaces

In addition to power interfaces, USOS EPS has interfaces with other systems, both to provide power or receive necessary data or services. Recalling the discussion of the Secondary Power System, note that all systems that require power from USOS EPS must interface with the Secondary Power System and a specific RPC (except for some EPS components that use primary power). The following sections describe the USOS EPS interfaces for receiving data or services from USOS systems.

3.5.2.1 Guidance, Navigation and Control

To orient the arrays, the Guidance, Navigation and Control (GNC) MDM broadcasts target angles for the BGAs. This data is routed through the Node 1 MDM to the PVCU. The PVCU then commands the BGA to the proper orientation.

3.5.2.2 Command and Data Handling

Command and Data Handling (CDH) provides all MDMs, data processors, and data buses required for the execution environment of the EPS software applications providing the control and monitoring functions. Supporting the software execution environment not only includes the data processing, but also the data communications. Data communications includes the transmission of commands, status, and data parameters required to monitor and control the EPS.

3.5.2.3 Thermal Control System

Where possible, USOS EPS components interface with the ISS TCS (ETCS or EETCS for external components and ITCS for internal components) for thermal control. However, on the PVMs and the Z1 truss, ISS TCS is not available. Consequently, PVMs use PVTCS for active thermal control of IEA components, and DDCUs, SPDAs, and RPDAs located on the Z1 truss use heat pipes for passive cooling.

3.6 Comparison between USOS and ROS EPS

For comparison purposes, consider Figure 3-10, which illustrates the EPS of the FGB. (FGB is used as a representative example of ROS EPS architecture.). In contrast to the USOS EPS distributed system design, the FGB uses a localized architecture. Instead of producing power in PVMs and distributing that power throughout multiple modules as in USOS EPS, the FGB and SM have self-contained EPS within each module (i.e., the FGB and SM modules produce, store, and consume their own power). However, the power system components are similar: solar arrays, array output regulators, batteries, charge/discharge units, and a distribution system. Furthermore, the voltage produced by the Russian arrays is converted to a lower user voltage level (32 V dc to 28 V dc), although this differs from the USOS EPS voltage levels (160 V dc to 124 V dc). ARCUs and RACUs provide the power interface between the USOS and ROS EPS by compensating for the different voltage levels. Another less apparent difference is that the ROS EPS uses a floating ground rather than the SPG, as in the USOS EPS. For the floating ground, equipment chassis are connected to the ISS infrastructure. However, individual components may not be; thus, all components may not be at a common potential.

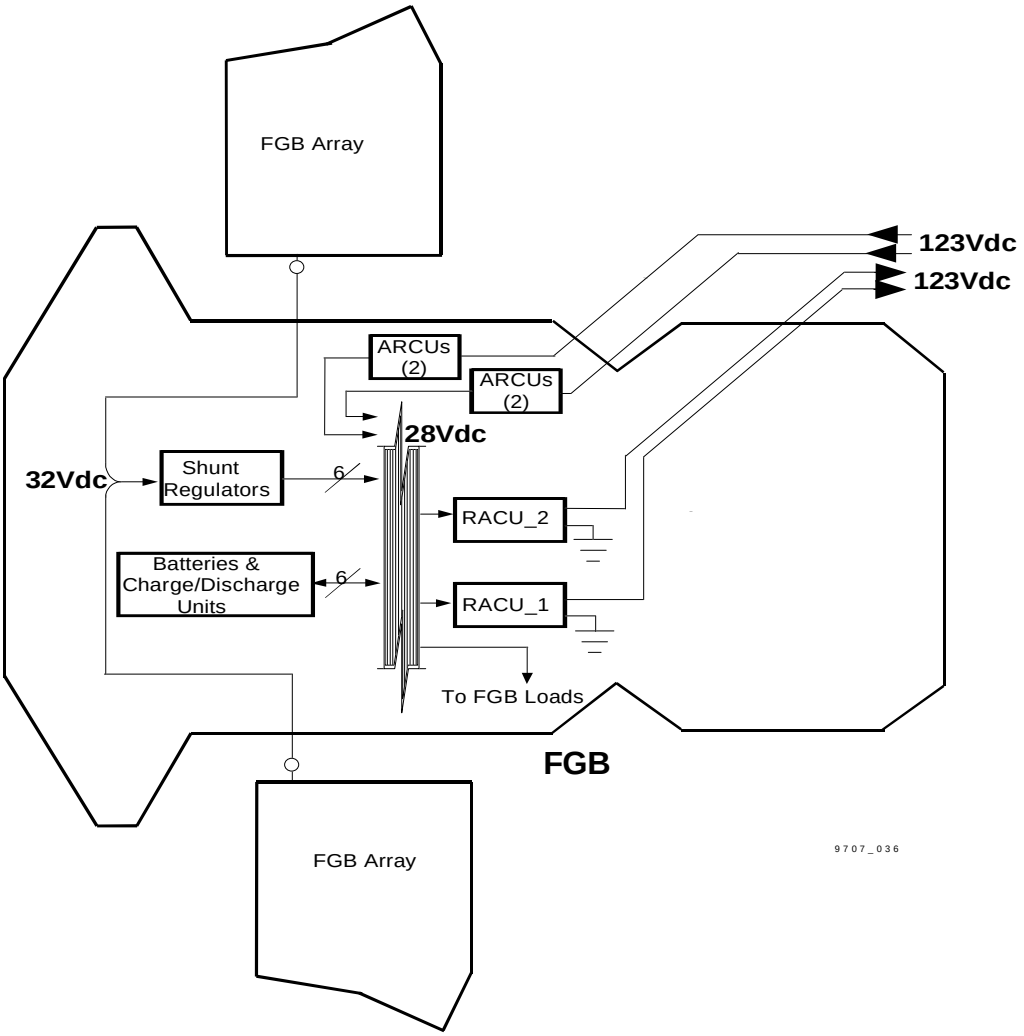

Figure 3-10. FGB electrical system drawing

A common question in regard to system design involves the choice of the USOS operating voltage level of ~124 V dc compared with the more common ~ 28 V dc currently used on the Shuttle, FGB, and the MIR space station. Part of the reason lies in the scope of the ISS, including the associated power requirements and the use of a distributed EPS architecture. Considering that power is a function of voltage and current, at low voltages, high power requires large currents. Large currents require heavy, thick conductors and have associated line losses. Use of a higher voltage level (near the USOS commercial standard 120 V ac) addresses the issues of cost, weight, and power loss for the USOS EPS.

3.7 Summary

Both the ROS and USOS EPS have the capability and responsibility for providing continuous electrical power to the ISS. Although the ROS and USOS EPS are similar in functionality, the FGB and SM are designed with self-contained EPS, while the USOS uses a distributed approach. The USOS EPS continuously generates primary power on PVMs and transmits it into the vicinity of the power user, converts into secondary power, and distributes power to each local user.

On Flight 8A, shown in Figure 3-11, USOS power production capability is provided by the P6 PVM. During this assembly stage, ISS power is provided by P6 arrays, FGB arrays, and SM arrays. Note that APCU power is also available when the Shuttle is docked to the ISS.

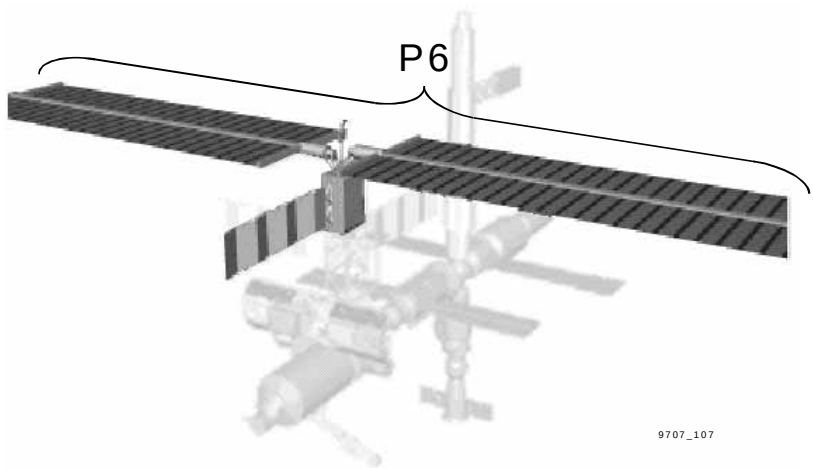

Figure 3-11. ISS at 8A

Table 3-1 provides a summary of the functions and components discussed in this overview that accomplishes the USOS EPS function. It is important to emphasize the two areas not addressed in this table:

- System protection, which is distributed across the USOS EPS in the form of software and hardware sensing of fault conditions and reactions to isolate faults and minimize system impacts
- System grounding design, which ties all components to a common potential.

Through the scope of this manual, the functions of the Primary Power System are accomplished by power channel components. Through the Flight 4A-12A period, all USOS EPS power is provided by two power channels on the P6 PVM. This power is transmitted directly to Secondary Power System components throughout the USOS segment, where it is converted to the proper voltage level and distributed to ISS users.

Table 3-1. USOS EPS components at flight 8A

Primary power system			**Secondary power system**		**Support systems**		
Power Generation	Power Storage	Primary Power Distribution	Power Conversion	Secondary Power Distribution	Photovoltaic Thermal Control System	Grounding	Command and Control
PV blanket and containment box Mast canister ECU SSU BGA	Battery BCDU	DCSU BGA (MBSU)*	DDCU	RPCM (Housed in SPDA, RPDAs)	PFCS PVR	PCU GFI	Node 1 MDM PVCU PMCU C&C MDM

*Four MBSUs are located on the S0 truss segment by Flight 8A but not integrated into the USOS EPS.

Additional power sources from the ROS and Shuttle are necessary for the assembly and operation of the ISS. These power sharing interfaces employ converters to compensate for voltage differences between the following electrical systems:

- APCU for interfacing between USOS EPS and Shuttle
- ARCU and RACU for interfacing between USOS EPS and ROS EPS

Questions

1. Which of the following functions is NOT considered a direct function of the EPS?
   a. DC-to-DC power conversion
   b. DC-to-AC power conversion
   c. Solar-to-electrical energy conversion
   d. Chemical-to-electrical energy conversion
2. Which of the following is **incorrect**?
   a. The Sequential Shunt Unit cycles coolant through the array.
   b. A Remote Power Controller Module (RPCM) provides the EPS with over current protection from Electrical Power Consumer Equipment (EPCE).
   c. The Sequential Shunt Unit regulates the primary bus voltage level during insolation.
   d. An RPCM provides switching capabilities for EPCE.
3. The function of the Solar Array Wing (SAW) is to: (circle all that apply)
   a. House and protect solar cell blankets during transport.
   b. Collect and convert solar energy from primary to secondary power.
   c. Deploy and retract solar cell blankets while in orbit.
   d. Collect and convert solar energy into electrical power.
   e. Position solar panels for optimum energy collection on orbit.
4. Which of the following best describes the ECU?
   a. MDM responsible for electronic control of the power channel.
   b. Firmware controller responsible for deploying/retracting the solar arrays.
   c. Hardware which controls the number of active solar array strings.
5. The DCSU is mounted on the _____.
   a. IEA
   b. SSU
   c. DDCU
   d. BCDU

6. Which one of the following BEST describes the function of the BCDU?
   a. Converts primary power to secondary power.
   b. provides regulated voltage to DDCU.
   c. Regulates charging of the batteries.
7. The **primary** function of the DDCUs is to provide health and status information on primary power.
   a. True
   b. False
8. SPDAs convert primary power to secondary power.
   a. True
   b. False
9. If a sequential shunt unit is declared lost, which of the following would result?
   a. The power channel would soon cease to function.
   b. The power channel would immediately cease to function.
   c. The power channel would continue to function indefinitely.
10. RPDAs are used in all ISS elements.
    a. True
    b. False
11. The DCSU provides the capability to _____.
    a. Convert from primary to secondary DC voltage levels.
    b. Distribute primary and secondary DC electrical power.
    c. Store DC electrical power at the primary voltage level.
    d. Shunt DC electrical power at the primary voltage level.
12. The range of motion of the beta gimbal is:
    a. 180°
    b. 270°
    c. 360°
    d. 90°

Section 4
Communication and Tracking Overview

4.1 Introduction

Communication is without question an integral component of the International Space Station (ISS). Without extensive communication with the ground, neither the safe, stable, reliable operation of the Station, nor would the dissemination of scientific research would be possible. The ISS Communication and Tracking System (C&TS) is designed to support these two important functions, Station operations and scientific research. This section provides an overview of the United States On-Orbit Segment (USOS) C&TS and its five subsystems.

4.2 Objectives

After completing this section, you should be able to:

- Describe the major functions and operations of the Communication and Tracking (C&T) Subsystems
- Describe the capabilities, constraints, and redundancies of the C&T Subsystems
- Describe how C&T Subsystems interface with other ISS systems
- Describe Russian Orbital Segment (ROS) C&T capabilities

4.3 Purpose

The purpose of the C&TS is to provide:

- Two-way audio and video communication among crewmembers onboard the Station, including Extravehicular Activity (EVA) crewmembers
- Two-way audio, video, and file transfer communication with Flight Control Teams located in the Mission Control Center-Houston (MCC-H) and payload scientists on the ground
- One-way communication of experiment data to the Payload Operations Integration Center (POIC)
- Control of the Station by flight controllers through the reception of commands sent from the MCC-H and remotely from the orbiter
- Transmission of system and payload telemetry from the ISS to MCC-H and the POIC.

4.4 Overview

The C&TS is divided into six subsystems: the Internal Audio Subsystem (IAS), the S-Band Subsystem (S-band), the Ultrahigh Frequency (UHF) Subsystem (also known as the Ultrahigh Frequency Communication System (UCS)), the Video Distribution Subsystem (VDS), the Ku-Band Subsystem (Ku-band), and the Early Communication Subsystem. Figure 4-1 shows the six subsystems and their interfaces with each other, with the Command and Data Handling (CDH) System, and with other external entities necessary to achieve the C&T functions. The Early Communication Subsystem is not part of this section because it is a temporary subsystem that will be dismantled during assembly Flight 6A. See Appendix C of C&TS Training Manual.

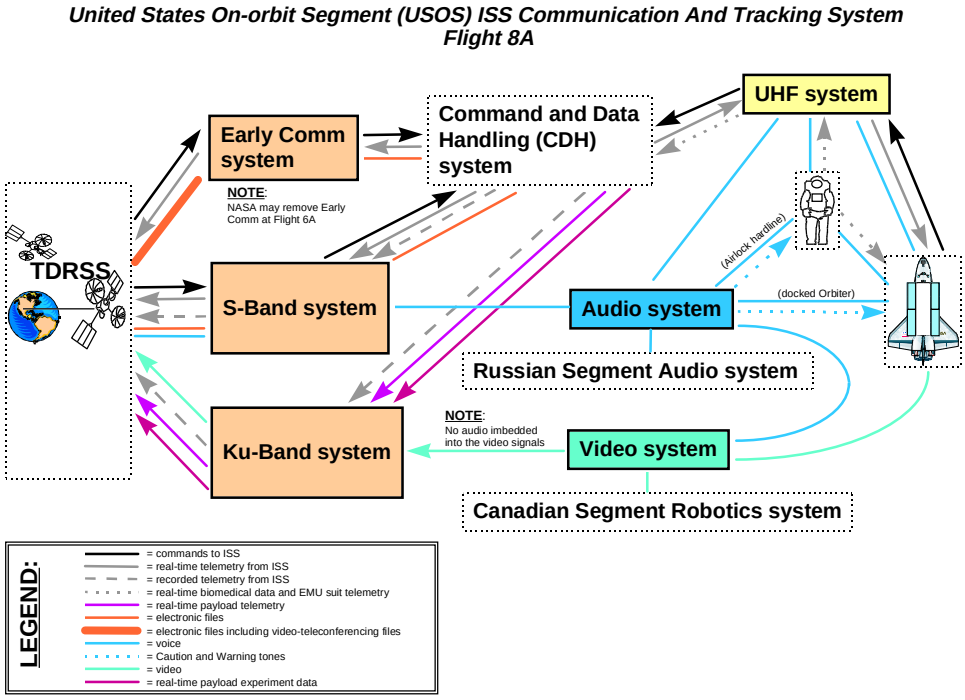

Figure 4-1. C&T System overview

As illustrated in Figure 4-1, all the USOS C&T Subsystems work together to provide the communication services needed by the USOS to carry out the mission of the ISS. ***The S-Band Subsystem transmits voice, commands, telemetry, and files. The IAS distributes audio onboard the Station and to external interfaces. The VDS distributes video onboard the Station and to external interfaces, including the Ku-band for downlink. The UHF Subsystem is used for EVA and proximity operations, while the Ku-Band Subsystem is used for payload downlink and video and file two-way transfer.***

The National Aeronautics and Space Administration (NASA) is studying plans to add to the Ku-Band Subsystem the capability to transfer commands and data between the ground and the USOS and also to add two-way transfer of video and associated voice between the USOS and the ground. This capability will provide a backup to the S-band capability.

Before the five C&T Subsystems and the Russian-equivalent systems are explained in Sections 4.2 through 4.6, it is important to understand the one important aspect of the C&TS that deals with transmission of external commands.

4.4.1 ISS Commanding

As previously stated, operating the USOS and controlling the ISS is a vital function supported by the C&TS. This is done through an MCC-H-to-Station link for commanding the Station and a Station-to-MCC-H link for sending telemetry from the Station. MCC-H is the determining center for commanding the USOS. Figure 4-2 shows the command paths to the Station operating systems through the U.S. Communication Subsystems only.

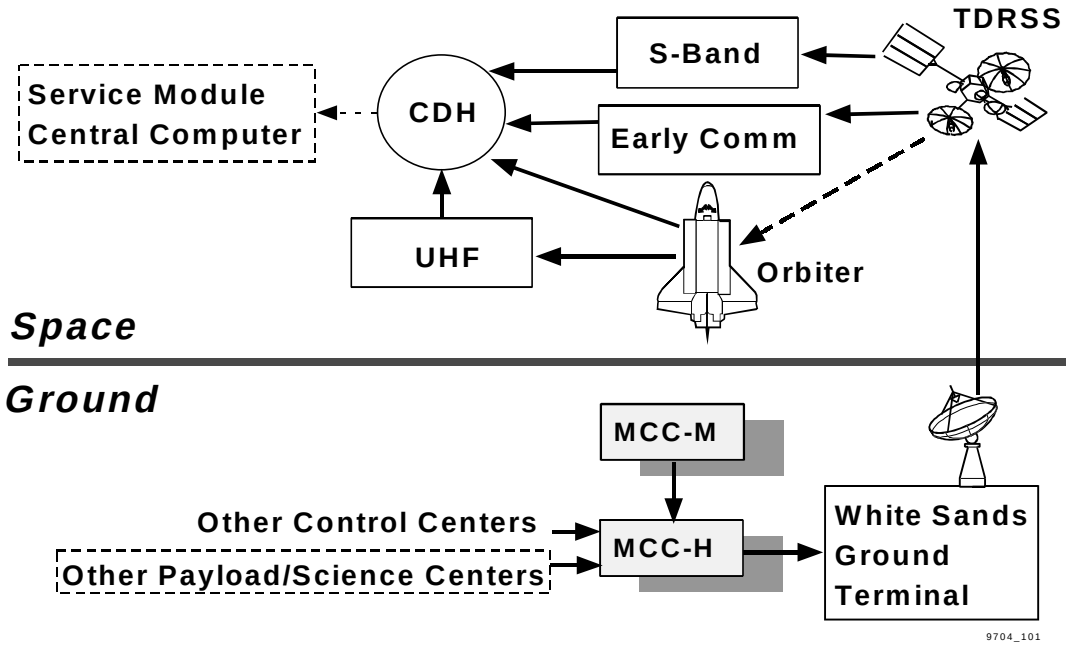

Figure 4-2. USOS command paths

Notice that the Early Communication, S-band, and UHF Subsystems are the C&T subsystems that can transport commands to the USOS. Commands can also reach the Station through a docked orbiter and through the ROS communication Subsystems. Mission Control Center-Moscow (MCC-M), European Space Agency (ESA), and National Space and Development Agency (Japan) (NASDA) control centers can command the ISS through MCC-H. Also, payload control centers can command payloads and some ISS equipment through the POIC and MCC-H.

Operational system telemetry and critical payload telemetry from the Station to MCC-H also use the same paths as the commands, but in the reverse direction, using the S-band and Early Communication Subsystems (not UHF). It should be noted that communication availability (coverage) for the ISS is not as plentiful as the orbiter's coverage. The orbiter has approximately 90 percent communication availability when using two Tracking and Data Relay Satellites (TDRSs). ***However, because of the signal blockage caused by the ISS itself, USOS C&T coverage is approximately, on average, 50 percent.*** Some orbits are less than 50 percent, while

others are more. Flight controllers use ground tools during mission and real-time planning to help choose the optimal TDRS pairs that provide for the best coverage.

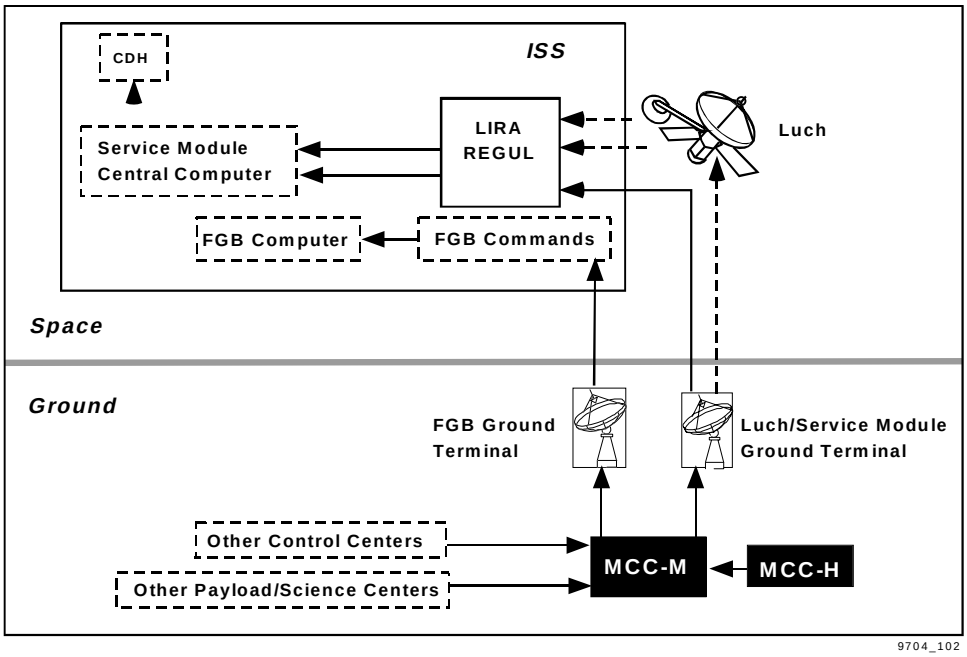

Figure 4-3. Russian Segment command path

The ROS command path is illustrated in Figure 4-3. Commands can be shared between the two segments through the C&DH Command & Control Multiplexer/Demultiplexer (C&C MDM). ***Notice that the ROS communication Subsystems can receive commands directly from ground stations through the Regul Subsystem and can receive commands from the LUCH satellite through the Lira or the Regul System.*** Telemetry from the ROS follows the same paths as commands, but in the opposite direction. Notice that the commanding function can be initiated from either control, MCC-H or MCC-M. Additional commanding may occur through other control and payload centers, when appropriate.

Russian communication coverage is nearly continuous while using Russian ground stations. However, these stations are available only for a portion of an orbit. The LUCH satellite coverage is approximately 45 minutes per orbit.

This explanation of command and telemetry paths and capabilities provides a background for understanding the functions and operations of the five C&T Subsystems that follows.

4.5 Internal Audio Subsystem

Notice in Figure 4-4 that the IAS interfaces with the S-band, UHF, and VDS Subsystems (through the Video Tape Recorders (VTRs)). The IAS is pivotal to understanding the way the C&T Subsystems work together to provide the communications necessary for mission success.

4.5.1 IAS Purpose

The purpose of the IAS is to distribute voice and Caution and Warning (C&W) tones onboard the ISS. This includes distributing those signals to other subsystems for further distribution, both internally to ISS (Russian Service Module (SM)) and externally to the orbiter, ground, and EVA crews. Later, the IAS is the primary means of distributing audio between the USOS and other International Partner modules, such as the Japanese Experiment Module (JEM) and the Columbus Orbital Facility (COF).

Reliable electronic conversation among physically separated crewmembers is essential for their safety and the success of their flights or missions. ***The IAS acts as the "intercom," and telephone system for the pressurized elements in the U.S. Segment to support this function.*** An interface with the SM allows for whole Station communications to support multi-element and multi-segment operations.

The IAS link with the USOS UHF Subsystem allows the crew to communicate with an EMU-suited EVA crew (while in the Joint Airlock and during an EVA) and with an orbiter crew during approach and departure. Hardline connections allow direct voice and C&W communication with the shuttle crew in a docked orbiter. Also, the IAS provides two-way air-to-ground voice, using the USOS S-band Subsystem. Finally, the IAS connects with the USOS VDS's VTRs to record and playback audio.

Perhaps the most important of all the IAS functions is the IAS's ability to inform the crew audibly of a C&W event. This capability is crucial to the safety of the crew and the condition of the ISS and its equipment.

4.5.2 IAS Operations and Components

Most of the signal routing and malfunction recovery for this subsystem are automated and, therefore, do not require crew or controller intervention. Flight controllers operate the subsystem occasionally to perform activation and checkout, troubleshooting, and some voice loop setup to offload the crew. The crew however, performs most of the configuration for the IAS at an Audio Terminal Unit (ATU). This includes making calls, joining conferences, and setting the volume, as needed. Establishing an air-to-ground conference requires commands to the IAS from a Portable Computer System (PCS) or the ground to configure the interface unit between the IAS and the S-band Subsystem.

The IAS consists of the following types of Orbital Replacement Units (ORUs): Internal Audio Controller (IAC); ATU; Audio Bus Coupler (ABC); and three types of audio interface units: the Assembly-Contingency/UHF Audio Interface (AUAI), the Docked Audio Interface Unit (DAIU), and the Russian Audio Interface Unit (RAIU). Figure 4-4 contains a simple schematic of this subsystem. The following subsections discuss these components.

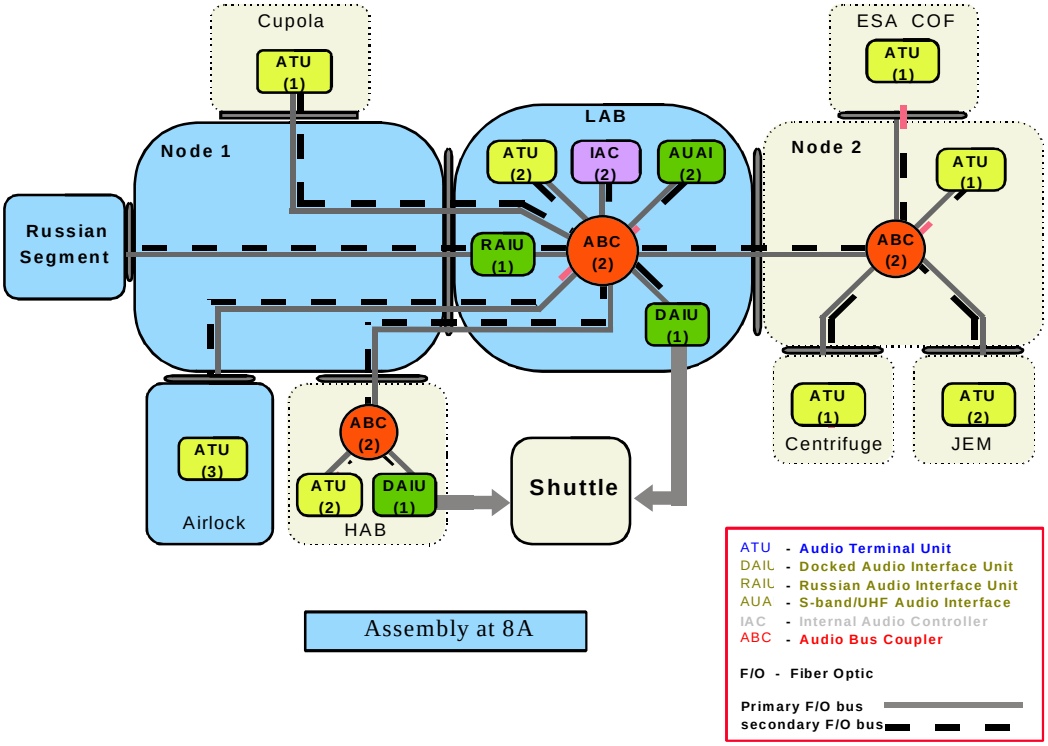

Figure 4-4. Internal Audio Subsystem overview

4.5.2.1 Internal Audio Controller

The IAC acts as the IAS switchboard for all of the calls made at the ATUs. It manages the IAS by automatically routing calls, C&W tones, and commands and status. Also, the two redundant IACs are the only interface of the IAS to the C&C MDM via the 1553 bus. Losing both IACs causes the loss of all U.S. Segment audio capabilities.

The IAC plays a key role in C&W events. ***When the C&C MDM detects a failure (including in the ROS), it sends a message to the IAC to annunciate a caution, warning, or emergency tone.*** The IAC, in turn, generates and sends these tones to the ATUs for broadcast through their speakers. ***There is no direct C&W interface between the USOS IAS and the ROS Telephone and Telegraph Communication (TTC) System.*** All messages to send C&W tones from one segment to the other must go through the U.S. Segment C&C MDM and ROS SM Central Computer.

4.5.2.2 Audio Terminal Unit

The ATU acts as the crewmember's telephone. Its capabilities are similar to that of a typical office telephone. As shown in Figure 4-5, the ATU has a microphone, a speaker, and a keypad. ***The crew can use the ATU to do the following: listen in on five different conferences; talk on one of the conferences; call another location directly and exclusively (e.g., another ATU, the ground, the UHF Subsystem); and initiate a page for a crewmember. The ATUs also***

annunciate C&W tones. The multiple ATUs can support conversations involving multiple crewmembers on the ISS.

Each ATU is zero-fault-tolerant. However, the ATUs are interchangeable. By performing in-flight maintenance, the crew can replace one ATU with another (13 total at Assembly Complete (AC)). Even if there are no spare ATUs, the crew could replace a malfunctioning ATU in an often-used location with an ATU from a rarely-used location.

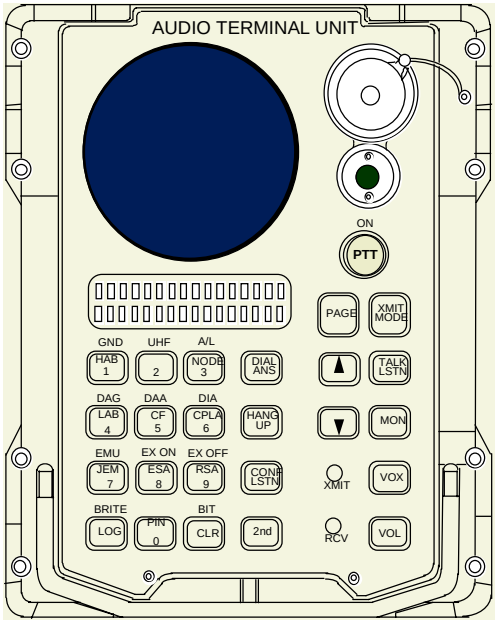

Figure 4-5. Audio terminal unit

4.5.2.3 Audio Bus Coupler (and Bus Network)

The ABCs provide the coupling of the different lines of the digital fiber-optic audio bus network. This bus network is the medium for the transport of the audio signal, including command and status signals, for all of the IAS ORUs.

There are two fully-redundant fiber-optic digital audio buses. Each bus has its own ABC at each juncture (see Figure 4-4), so there are two redundant strings of the audio bus network. Each ATU, each IAC, and the interface units are attached to both buses. Of course, losing both audio buses causes the loss of all U.S. Segment audio capabilities.

4.5.2.4 Interface Units

The IAS has many interface units that allow audio connectivity to other audio systems. ***The AUAI is the connection to both the EVA crew, via the UHF Subsystem, and to the ground, via the S-band Subsystem. The DAIU is the interface between the USOS and a docked orbiter. The RAIU is the connection between the USOS and the ROS and is the interface to the VTRs.*** Both the DAIU and the RAIU must convert audio signals from digital (IAS) to analog (orbiter and ROS) and vice-versa.

There are two AUAIs. Each AUAI is an interface between the IAS and one UHF Subsystem string and the two audio channels of one S-band Subsystem string. They therefore form two redundant strings of space-to-space and space-to-ground communications.

There is only one DAIU (at 8A) and only one RAIU. These two interface units are, however, interchangeable. If a DAIU or RAIU fails, the crew can reestablish lost capability by performing in-flight maintenance to exchange them. At AC, there are two DAIUs. At that point, one DAIU is used when the orbiter docks to PMA2 and the other when the orbiter docks to PMA3.

4.5.2.5 Application Software

The C&C MDM, through the IAS application software, controls and monitors the IAS through the IAC. The C&C MDM sends commands to the IAC, which then routes the commands to the IAS ORUs. In the reverse direction, each IAS ORU sends its status to the IAC, which then routes the status to the C&C MDM. If there is an IAC failure, the software automatically commands a switch to the redundant IAC so that there is no interruption of service. It is especially important for C&W tone capability not to be interrupted. While there is one 1553 bus connection to each IAC, there is dual redundancy in that each bus connection has two channels (A and B).

4.5.3 Russian Audio

The ROS TTC Subsystem provides hardwire audio capabilities between all Russian modules. It also has an interface to the USOS IAS via the RAIU. The TTC System provides voice, paging, and C&W communications capability for crewmembers. This system receives and records telegraph information over the VHF-1 channel (space-to-ground), VHF-2 (space-to-space), and through the Regul and Lira Systems. The telephone Subsystem supports six Audio Communication Units (ACUs) in the SM and two ACUs in the Functional Cargo Block (FGB). Each ACU has two headsets with individual volume controls and push-to-talk buttons. They also have a dynamic (vox) mode with built-in microphones. The TTC System is analog, while the IAS is digital. Also, the conferences for the TTC System are hard-wired, while the conferences for the USOS are multiplexed and reconfigurable. The TTC Subsystem uses simplex communications while the IAS uses duplex communications.

Table 4-1 shows the expansion of IAS Subsystem capabilities during assembly of the ISS.

Table 4-1. Internal audio subsystem assembly sequence

Flight	Hardware	Capability
5A	IAC-1, IAC-2, LAB ATU-1, LAB ATU-2, DAIU-1, AUAI-2, LAB ABC-1, LAB ABC-2	First capability of the U.S. Audio System. The AUAI-2 provides the first air-to-ground capability via ISS Audio System. Also, provides ability to communicate to the orbiter via the U.S. Segment
6A	RAIU-1, AUAI-1, CUPOLA ATU-1	The RAIU provides the Audio interface between the ROS and the U.S. Segment. The Cupola ATU will be used as a spare until the Cupola is attached
7A	AIRLOCK ATU-1, EMU ATU-1, EMU ATU-2	First capability of Station-based EVAs with EMUs
10A	NODE 2 ATU-1, NODE 2 ABC-1, NODE 2 ABC-2	Additional ATU
1J/A	JEM ATU-1, JEM ATU-2	Additional ATUs
1E	APM ATU-1	Additional ATU
UF7	CAM ATU-1	Additional ATU
16A	HAB ATU-1, HAB ATU-2, DAIU-2, HAB ABC-1, HAB ABC-2	Additional ATUs and DAIU

4.6 S-Band Subsystem

The IAS's interface with the S-band Subsystem is the primary means of transferring audio to and from the Station and the ground. These two subsystems work together to provide ISS audio communication, a central function of the C&TS. The S-Band Subsystem was once called the Assembly/Contingency System (ACS). This acronym can still be found in S-band documentation today.

4.6.1 Purpose

The S-Band Subsystem is the communication system that is used for primary Command and Control of the ISS. The ROS Communication System is used for backup command and control. However, MCC-M will command the ROS systems, coordinating with MCC-H concerning those commands that effect the USOS and the ISS as a whole.

The S-Band Subsystem transports commands from the MCC-H and the Payload Operations Integration Complex (POIC) to the ISS and transports USOS System and critical payload telemetry from the ISS to MCC-H and POIC. Telemetry data can be "real-time" or recorded telemetry data. The S-band also is used for two-way audio and file transfer between the

ground and the ISS. The audio can be "real-time" or recorded. Selected FGB and ROS system telemetry are also transferred to the ground through the S-Band System.

4.6.2 S-Band Components and Operations

The S-Band Subsystem consists of three ORUs (see Figure 4-6, S-band overview). They are the Baseband Signal Processor, the Standard TDRSS Transponder, and the Radio Frequency (RF) Group, including a steerable and an omni-directional antenna. The S-Band Subsystem operates in a zero-fault-tolerant condition on truss segments Z1 and P6 until 9A, when a second complete S-Band Subsystem is brought up to the Station on truss segment S1 and becomes operational. At 1J/A, the Z1/P6 string is moved to its permanent location on truss segment P1. ***There is no cross-strapping, or connection, between the two S-band strings.*** The S-band can be operated in a degraded mode, such as, a loss of one channel of audio or one of the antennas.

The S-band Subsystem transmits and receives at a High Data Rate (HDR) of 192 kbps return link, and 72 kbps forward link, and a Low Data Rate (LDR) of 12 kbps return and 6 kbps forward. There is no audio transmission in LDR. Flight controllers in MCC-H perform the primary role in operating the S-Band Subsystem. The crew acts as a backup to the flight controllers under certain Loss-of-Signal (LOS) conditions. For nominal operations, some of the duties of a flight controller may include activating or deactivating the system, checking it out by running system tests, and making changes to data rates or operational limits of components. These operations are done during major assembly operations, powerdowns, or during maintenance activities. The crew will most likely not participate in these activities other than to confirm onboard indications.

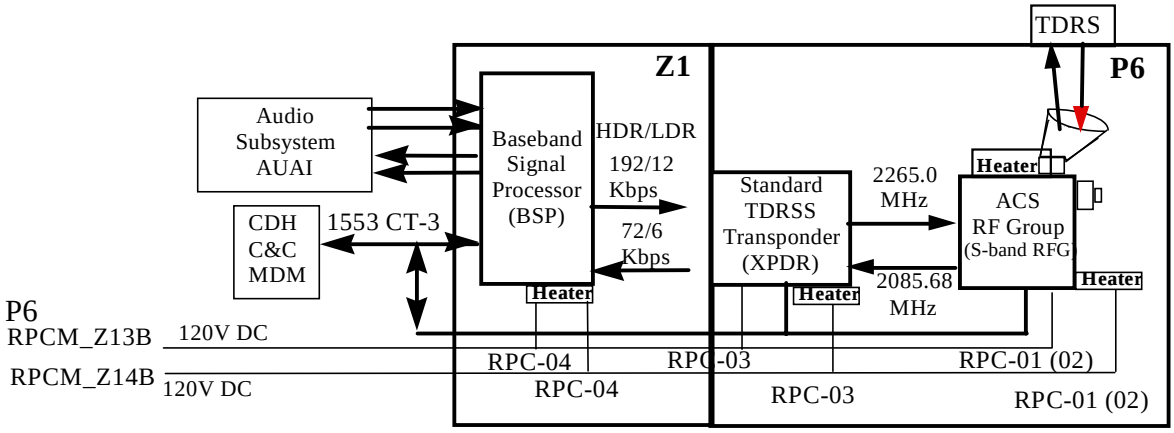

Figure 4-6. S-band overview

As shown above, the S-band interfaces with the Electrical Power System (EPS). Once the Remote Power Controllers (RPCs) are closed, the ORUs perform a Power On-Self-Test and wait for software commands. The EPS also independently powers heaters for these external components.

If there is no interruption of the command link from the MCC-H, failures within the S-band are diagnosed and isolated by MCC-H Flight Controllers. Otherwise, the ground must use the telemetry and command capability of the orbiter, if it is present, or use the Russian partner's communication equipment to isolate or restore the S-band functions. They coordinate with their MCC-M counterpart to command the system, and for that matter, the Station, from the MCC-M. Also, after an S-band failure where the command link is lost, the crew becomes an important asset in trying to reestablish S-band communication.

4.6.2.1 Baseband Signal Processor

For the return link (the communication path from the Station to TDRSS and then to the MCC-H), the Baseband Signal Processor (BSP) does what the name infers, processes telemetry packets sent from the C&C MDM over the 1553 bus. ***It resegments the telemetry packets into Channel Access Data Units (CADUs), which are Reed-Solomon (R-S) encoded and sent to the transponder at 192 kbps.*** R-S encoding ensures that the ground receives nearly error-free data. On the forward link, or uplink, ***the CADUs created on the ground, are decoded, and most transmission errors are fixed in the R-S decoder. In addition, the forward data, encrypted on the ground, is decrypted to ensure the safety of the uplinked commands.*** That is, no inappropriate commands can be passed to the C&C MDM. File packets are sent to the BSP in the same way telemetry packets are sent and processed in the same way, both for the return and forward links.

The S-band provides two independent channels of two-way voice between the crew and the ground. The BSP receives two channels of digital audio data from the AUAI unit of the IAS. The audio data is compressed in the BSP. Audio data is then segmented and encoded just as telemetry data and files are. For the forward link, the digital audio data is decoded, decrypted, and decompressed before being clocked into the AUAI of the IAS for distribution onboard. Two-way audio is available in HDR only.

The C&C MDM interface over the 1553 bus is also used for commands from the S-band application software to the BSP. It is also used by the software to extract status from the BSP to be passed to the C&C MDM Common Value Table to be turned into telemetry. ***Notice in Figure 4-6 that the 1553 bus is connected to the transponder and the Radio Frequency Group (RFG), too. This connection is used for ORU commanding and status. It is not used for command and telemetry CADU transportation.***

4.6.2.2 Transponder

The transponder is the ORU that creates a radio signal and modulates that signal corresponding to the digital data pattern from the BSP. The transponder sends the modulated radio signal to the RFG. ***Inversely, the transponder receives the radio signal from the RFG, demodulates the signal and recreates the digital data per the modulation pattern.*** It sends this data to the BSP at 72 kbps for the HDR mode. These signals are not transported over the 1553 bus, but by an RS-422 cable. The 1553 bus is connected to the transponder to send commands to the ORU and extract status from the transponder to be sent back to the C&C MDM.

4.6.2.3 Radio Frequency Group

For the return link, the RFG receives an RF signal from the transponder, amplifies it, and broadcasts the RF signal through the High Gain Antenna (HGA) or Low Gain Antenna (LGA) to the TDRS, which in turn communicates with the MCC-H via the White Sands Ground Station (WSGS). ***On the forward link, the RFG antenna (either HGA or LGA) receives a signal from the TDRS and sends the signal to the transponder for demodulation.*** The signals to and from the transponder are not transported over the 1553 bus, but by an RS-422 cable. The 1553 bus is connected to the RFG to send commands to the ORU and extract status from the RFG to be sent back to the C&C MDM.

The HGA is used for HDR operations, while the LGA is used for LDR operations. The HGA is a gimbaled antenna (moving in azimuth and elevation) that tracks the TDRS as the Station orbits the Earth. The HGA is commanded to the correct position by the S-band application software. The LGA is an omni-directional antenna. Loss of the HGA antenna is a significant loss since that antenna is used for HDR transmission. In that case, either the Early Communication System (until 6A) or the ROS communications equipment is used.

4.6.3 Software

Fortunately, the S-band can operate semi-automatically. This is due to the S-band application software that resides in the C&C MDMs. This software issues appropriate alarms based on detected out-of-limits conditions from the status data sent to it from the S-band components. ***It also detects LOS conditions and may issue commands to automatically switch to another S-band string or to a LDR service.*** It is the flight controller's duty to enable this automated Fault Detection, Isolation, and Recovery software capability.

There is another software application pertaining to S-band called Extended Loss of Communication (ELOC). ***This application is another routine to regain communication when there has been an extended period of time without commanding ability to the Station.*** This routine is initiated when a timer, that is reset by an MCC-H Flight Controller command, expires.

The C&T software has an interface with the GNC software for HGA pointing data. The GNC software calculates the position of the HGA in regard to the Tracking and Data Relay Satellite System (TDRSS) and passes those coordinates to the S-band software, which in turn, recalculates the angles for the antenna. It sends those coordinates to the RFG antenna controller to point the antenna.

4.6.4 Comparable Russian Segment Communication Systems

4.6.4.1 Regul System

The ROS equivalent to the S-band is the Regul System. Before telemetry reaches the Regul System, data is collected onboard the ROS, using the Onboard Measuring Subsystem. This system is divided into two parts. The Onboard Data Telemetry System and the Transit-B System.

The Regul System is designed for two-way voice communication, digital command/program information, as well as telemetry transmission to Russian ground stations or the LUCH satellite. It also has the capability to receive and transmit range and velocity information, as well as time-referenced signals. The Regul System is comprised of three transmitter/receivers, three digital processing units, two directional finders, and an exchange adapter to talk to the Onboard Complex Control System (OCCS). It also has an omni antenna (standby mode) when communicating with the ground stations and a phased array antenna (active mode) when communicating with the LUCH. The system can operate in both the active and standby modes simultaneously.

4.6.4.2 Telephone and Telegraph Communication Subsystem

The Russian TTC Subsystem provides duplex radio communication over the VHF-1 (space-to-ground) channels for space-to-ground audio communication to Russian ground stations or through the Regul (LDR) or Lira (HDR) Systems when a relay satellite is used. This is comparable to the S-band capability to transmit audio to the ground. Audio collected from the space-to-space VHF-2 Subsystem (UHF equivalent) can be retransmitted to the ground, LUCH satellite, or recorded onboard using this system.

Table 4-2 shows the expansion of S-band Subsystem capabilities during assembly of the ISS.

Table 4-2. S-band assembly

Flight	Components	Expansion details
3A	BSP, RFG in the Z1	Heaters only, one for BSP, one for RFG
4A	Transponder on P6	RFG moved to top of P6; S-band operational in LDR only. Each ORU heater operational
5A	Lab with C&C and S-band SW	HDR operations; two-way voice, files, command, and telemetry. ZOE recorder playback
9A	S1 installed with S-band string S1	S1 string operational and P6 string operational; one fault tolerant
13A????	P1 installed	P6 string moved to P1; becomes string P1

4.7 Ultrahigh Frequency Subsystem

The ISS UCS is one of the subsystems of the Space-to-Space Communication System (SSCS) and operates in the UHF frequency range. The other parts of the SSCS are the orbiter and Extravehicular Mobility Unit (EMU) space-to-space UHF Subsystems. The UCS, commonly referred to as the UHF Subsystem or UHF, provides the SSCS link for the ISS.

4.7.1 Purpose

The purpose of the Station UHF Subsystem is to provide for space-to-space communication in and around the ISS when hardline communication is not possible. ***This space-to-space communication is between the ISS and the orbiter for voice, commands, and telemetry; EVA-suited crewmembers for voice, biomedical, and EMU data; and to accommodate future Free Flyer (FF) payloads for commands and telemetry.***

4.7.2 Ultrahigh Frequency Subsystem Operations and Components

The UHF Subsystem is designed to support up to five simultaneous users. It is a digital data system operating on a RF network. It consists of a Space-to-Space Station Radio (SSSR), enclosing two transceivers, two sets of external double antennas, and internal antennas that are found in every USOS habitable module. (See Figure 4-7, UHF Subsystem overview).

The UHF Subsystem supports not only traditional EVA functions of voice, EMU, and biomedical data transmission, ***it also supports the space-to-space transmission of commands and telemetry. This is used during rendezvous and docking operations when the Station must be configured remotely.*** The orbiter sends commands to the ISS UHF Subsystem, which passes them to the C&C MDM for execution. The ISS UHF returns only telemetry data. FFs (remotely controlled vehicles) use the UHF Subsystem for approach and docking too. However, with FFs, the ISS sends commands to the FF through the UHF Subsystem and receives telemetry. The European ATV is such a vehicle.

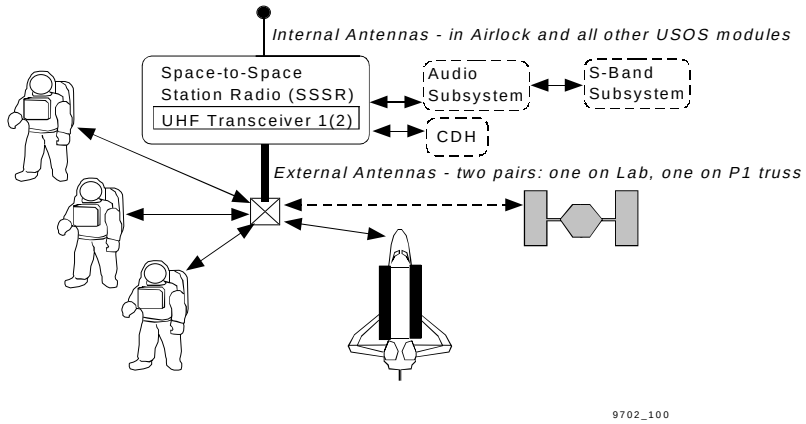

Figure 4-7. UHF Subsystem overview

The UHF Subsystem can be operated by the crew or by flight controllers. Flight controllers can configure the system or run system tests by commands sent to the Station. These commands are sent via the ISS S-band or the shuttle OIU to the C&C MDM and then to the UHF radio. The ground also supports UHF troubleshooting. The crew uses the Portable Computer System (PCS) laptop to command the UHF Subsystem and verify power modes.

4.7.2.1 Space-to-Space Station Radio

The SSSR consists of one ORU, containing two transceivers. Both transceivers are contained in one housing and are serviced by one coldplate; but, each is powered by separate EPS RPCs. Similar to RF systems, the SSSR transceivers (radios) consist of a 1553 module that receives and transmits commands and telemetry from and to the C&C MDM. The SSSR also formats digital audio and multiplexes it with 1553 data and sends it to the internal modem. The modem R-S encodes the data and turns the data into an RF signal that is amplified before it is sent to the antennas for broadcast. Conversely, the SSSR amplifies and demodulates the received signal. The modem decodes and decrypts the data. ***The signal is then processed to separate the audio data from the commands or EMU data.*** It sends the commands and EMU data to the C&C MDM over the 1553 bus. It sends the digital audio to the IAS AUAI for distribution internally through the IAS and externally through the same AUAI to the S-band, which transports the voice to the ground. The loss of both transceivers in the ORU results in loss of all UHF Subsystem RF communications for the Station. ***A fire in one rack could destroy both radios.***

4.7.2.2 UHF External Antennas

The UHF external antennas consist of two pairs of antennas mounted on the U. S. Lab Module and truss of the ISS. The antennas are designed to receive signals up to 7 kilometers away. For EVA activity, communication availability provided by these antennas is nearly 100 percent (with all four antennas functional). If the orbiter is present, the orbiter UHF Subsystem can also communicate with the EVA crew. The IVA crew communicates with the EVA crew via the IAS AUAI and the UHF Subsystem. The loss of an external antenna lowers the ability to transmit and receive in that antenna's range. Before the second external antenna pair is assembled on Flight TBD, a loss of one Station external antenna can cause about 30 percent of coverage to be lost.

4.7.2.3 UHF Internal Antennas

The UHF Subsystem also supports the periods before and after EVA operations. Before the EVA crewmembers unplug from the EMU Audio Control Panel (EACP) and open the airlock hatch to egress the Station, ***the USOS EMU-suited crewmembers can communicate using the Airlock antenna while still in the airlock.*** They can also communicate with each other in the airlock when they return to the airlock completing the EVA or plug back into the EACP. Voice, biomedical, and EMU communication is thus uninterrupted. If the Airlock antenna is lost, the EVA crew must connect to the EACP to communicate.

The UHF Subsystem not only supports EVAs occurring external to the ISS, ***but also EVAs occurring within a depressurized Station module.*** The internal antennas consist of an Intravehicular Antenna Assembly (IAA) and the Joint Airlock antenna. The IAA's antennas are located throughout the U.S. pressurized modules. This capability is necessary to carry out repairs and restore nominal ISS operations. After this second external antenna pair arrives, a loss of one Station external antenna does not cause any coverage to be lost.

4.7.3 UHF Software

In the case of UHF Extended Loss of Communication (ELOC), an auto recovery command is issued by the UHF application software located in the C&C MDM. The crew may also execute manual recovery procedures. The autorecovery command swaps transmission from one transceiver to the other transceiver. This autorecovery routine is initiated by an expiration of a timer.

4.7.4 Comparable Russian Segment Communication Systems

The Russian VHF System is analogous to the U.S. UHF Subsystem. ***The VHF-2 channel is part of the TTC Subsystem (see IAS subsection) and is used primarily for space-to-space communication.*** Communication with the EVA cosmonauts is via the VHF-2 channel. The VHF-2 also uses duplex as well as simplex audio communication that occur between the Station and approaching manned vehicles. This voice communications link can also be routed directly to the ground through the VHF-1, Lira or Regul voice channels, or can be recorded to a voice recorder for playback at a more convenient time.

The Transit Autonomous Radio System is used for the spacesuit parameters and control during egress into space and consists of the Transit-A System contained in the cosmonauts spacesuits and the Transit-B System in the SM. This system is part of the Onboard Measuring Subsystem.

Table 4-3 shows the expansion of the UHF Subsystem capabilities during assembly of the ISS

Table 4-3. UHF subsystem

Flight	Component	Capability
5A	U.S. Lab with C&C MDM	SSSR with two transceivers; check-out of SSSR
6A	One set of external antennas installed on Lab	Can support orbiter-based EVAs
7A	Airlock with internal antennas	Can support ISS-based EVAs
11A	Second set of external antennas	Can support whole Station, ISS-based EVAs

4.8 Video Distribution Subsystem

The VDS, as shown in Figure 4-8, also has an interface with the IAS through the VTR. Any audio on the audio bus can be recorded on the VTR and played back to the audio bus for redistribution. The VTR, of course, can record and playback video. ***It is important to know that the ISS routes video and audio separately.*** Video and audio are also sent to the ground via different paths. Audio and its associated video are resynchronized on the ground.

4.8.1 Video Distribution Subsystem Purpose

The purpose of the VDS is to distribute video signals onboard the U.S. Segment of the ISS. It also interfaces with other International Partner (IP) Video Subsystems. The sources of this video

are external cameras, internal cameras, recorders, and payload rack cameras. The possible destinations are internal monitors, recorders, payload rack recorders, a docked orbiter, and the ground through the Ku-band. The video signals are distributed by fiber-optic analog video lines.

The external cameras, both on the ISS structure and on the robotics equipment, act as valuable tools for the external operations of robotics and EVA, especially for ISS assembly and maintenance. ***The robotics operator cannot operate the Space Station Robotics Manipulator System (SSRMS) without the camera views provided by the ISS VDS.*** Certain payload experiments use internal cameras to investigate and record the results of experiments. Video-conferencing also uses the internal cameras of the VDS. ***As with the orbiter, sending any ISS video signals to the ground requires routing through the Ku-Band Subsystem.***

4.8.2 Video Distribution System Operations and Components

For both external and internal cameras, both the crew and flight controllers can operate the subsystem. Typically, flight controllers always power up and power down the subsystem ORUs and operate the subsystem when it is used for operations involving payload data, for any recorded video, and for troubleshooting. Crewmembers typically operate the subsystem when it involves external operations. This includes routing a video image to an internal monitor, focusing, iris open/close, and pan and tilt.

Instead of being set up as different strings, the VDS redundancy scheme is that all components are attached together. While the loss of a single component does not make the subsystem unusable, the subsystem does lose capability. For example, if a certain external camera port were to fail, the subsystem could continue to operate, but a camera view from that specific location would be lost.

The VDS uses the following components: Robotics Workstation (RWS), Common Video Interface Unit (CVIU), Internal Video Switch Unit (IVSU), External Video Switch Unit (EVSU), Sync and Control Unit (SCU), internal camera port, external camera port, robotics Power/Data Grapple Fixture (PDGF), External Television Camera Group (ETVCG), VTR, Video Baseband Signal Processor (VBSP), and International Standard Payload Racks (ISPRs). Figure 4-8 contains a simple schematic of the VDS at the completion of Assembly Flight 8A. Not all of these are part of the VDS. These components are interconnected rather than set up as “strings.”

The following subsections briefly discuss these components. Section 2 of this document discusses the components in more detail.

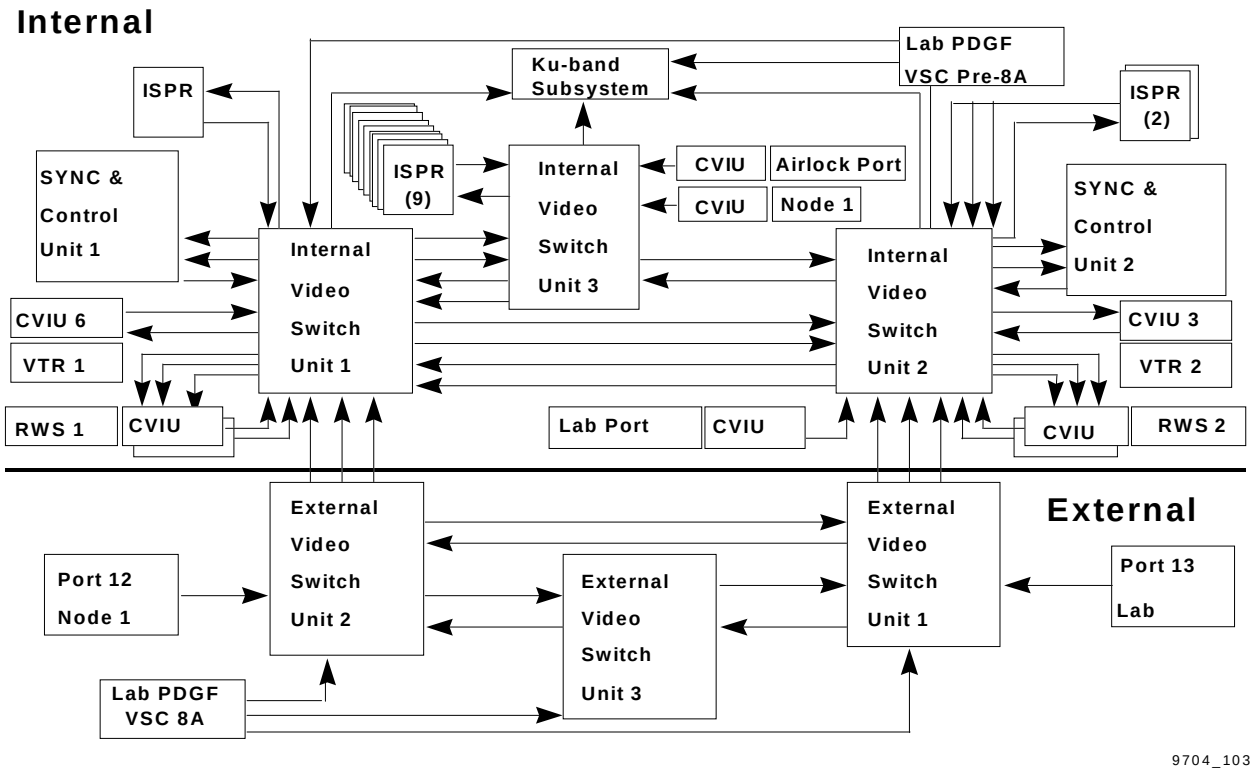

Figure 4-8. Video Distribution Subsystem overview

4.8.2.1 Robotics Workstation

The RWS, which is part of the Robotics System, is where crewmembers typically operate the SSRMS. Since robotics operations require video, ***the television monitors and the hardware panel for crewmember control of the VDS are located at the RWS.*** Here, the crewmember can route a video image from any camera or VTR to an onboard monitor (located at the RWS), a VTR, or to the ground**.** The crewmember can also operate the external cameras (pan, tilt, focus, etc.) from the RWS. ***All camera commands can also be sent from a PCS or from the ground.***

There are two redundant RWSs. At the time of Assembly Flight 8A, they are both in the Lab Module. Later, one of the two RWSs is moved to the Cupola when it is installed onto the ISS.

4.8.2.2 Common Video Interface Unit

The CVIU is merely the interface between the fiber-optic video line and a component, requiring a conventional copper connection. The CVIU also supplies electrical power to the component so that only one connection to the component is required. There are multiple CVIUs for use with each component that requires video signal conversion.

4.8.2.3 Internal Video Switch Unit and External Video Switch Unit

The Video Switch Units (VSUs), both internal and external, perform the following functions: route video signals, distribute sync signals, and read external camera status from the incoming

video signals and send the status to the C&C MDM. At the time of Assembly Flight 8A, there are three IVSUs located in the Lab Module and three EVSUs located on the S0 truss.

4.8.2.4 Sync and Control Unit

The SCU performs the following functions: generates a "house" sync signal for the VDS, generates test patterns, provides the capability to "split-screen" two video images together into one image, provides the capability to perform "time-based correction" of a video signal from a VTR or camcorder, and routes the external camera commands from the C&C MDM to the external cameras. There are two SCUs located in the Lab Module. ***They are redundant except that each can perform one split-screening or one time-base correcting at a time. If one SCU is lost, then the VDS can perform only one of these two functions at a time.***

4.8.2.5 Camera Ports

The ISS has camera ports (part of the Structures and Mechanisms System), both internal and external, for connecting cameras to the ISS. The internal camera ports are for hand-held commercial camcorders. ***The external camera ports (14 in all) are for the ETVCGs***, discussed later. The external camera ports do not include robotics cameras; these are also discussed later. The internal camera ports all have CVIUs to provide video signal conversion and power.

4.8.2.6 Power/Data Grapple Fixture

The PDGF (part of the Robotics System) provides the connection of the SSRMS with the ISS. ***The SSRMS can provide three video signals from cameras on the SSRMS elbow and wrist. The VDS routes these signals the same way that it routes video signals from the internal camcorders and the ETVCGs.*** At Assembly Flight 8A, there is only one PDGF, which is located on the Lab Module. (See Robotics System Training Manual.)

4.8.2.7 External Television Camera Group

The ETVCG contains the externally mounted camera, along with its associated hardware. This associated hardware includes a light source, mechanisms and electronics for panning and tilting, and a converter for converting the video signal to fiber-optic (similar to the function performed by the CVIU). At AC, there are four ETVCGs, but they all arrive at the ISS after Assembly Flight 8A. ***However, there will be at least 14 external camera ports with only the four ETVCGs among them. If an external operation requires a camera view from a certain camera port, and there is no ETVCG at that port, then the ETVCG must be moved via EVA.*** This task takes one EVA crewmember approximately 30 minutes to perform. Note that, because of safety requirements concerning electrical inhibits, some ISS systems (e.g., a S-Band Subsystem string) may require powerdown before moving an ETVCG. Clearly, moving an ETVCG affects more than just the Video Subsystem.

4.8.2.8 Video Tape Recorder

The VTR performs the same functions as those of a commercial VTR. It can record and play back video and audio (audio signals must go through the IAS). ***It can be operated both from the***

VTR itself or remotely from an onboard PCS or the ground with a manual assist from the crew for putting in and taking out a tape. At Assembly Flight 8A, there are two VTRs onboard the ISS, one in each MSS rack.

4.8.2.9 Video Baseband Signal Processor

The VBSP (part of the Ku-Band Subsystem) converts the video signal from the fiber-optic format to a digital format to be processed by the Ku-Band Subsystem for transmission to the ground. The Ku-Band Subsystem, subsection of this document, discusses the VBSP in more detail.

4.8.2.10 International Standard Payload Rack

The ISPR (part of the Payloads System) provides a location for payloads on the ISS. ***There are internal video ports in each of the multiple ISPRs to support internal video operations.*** Each payload with video requirements must have its own TV camera or monitor to plug into the ISS-provided port. Video signal conversion from copper to fiber-optic (and vice-versa) is the responsibility of the payload sponsor.

4.8.2.11 Application Software

The C&C MDM, through the VDS application software, controls and monitors the VDS. For video routing, the VDS application software calculates the path for the video signal to take, and the C&C MDM sends the command to the appropriate component. For commanding the ETVCG, the C&C MDM sends commands to the SCU, which then routes the commands to the ETVCGs. In the reverse direction, each VDS component, except for the ETVCG, sends its status to the C&C MDM. The ETVCG sends its status to the VSU, which then routes the status to the C&C MDM. ***If there is a component failure, there is no automatic fault detection, isolation, and recovery.*** All recovery must be commanded.

4.8.3 Russian Equivalent

The ROS Television Subsystem collects video during EVA activities and aids in the control of approach and docking vehicles (both manned and unmanned), using monochrome cameras mounted on the docking ports and on the approaching vehicles themselves. It also receives television video from various modules and displays television pictures on monitors throughout the ROS. The subsystem is capable of digitizing the SECAM signal for transmission of monochrome and color video (with associated audio) to the ground and is able to receive monochrome signals from the ground. This subsystem relies on the ROS's Lira Subsystem for two-way video communications with the ground. Either the crew or ground controllers can operate this subsystem. ***The Television Subsystem is not compatible with USOS National Telemetry/Television Standards Committee (NTSC) signals, and there is no connectivity between the ROS and USOS.***

In addition, the ROS can also transmit analog video directly to ground stations through the SM TV System.

Table 4-4 shows the expansion of the VDS Subsystem capabilities during assembly of ISS.

Table 4-4. Video distribution subsystem assembly sequence

Flight	Hardware	Capability
2A	Node 1 CVIU and camcorder port, Node 1 external camera port	None
5A	IVSU-1, IVSU-2, IVSU-3, SCU-1, SCU-2, camera ports for payload racks, Lab CVIU and camcorder port, Lab external camera port, Lab PDGF VSC	Testing of subsystem only
6A	RWS-1, RWS-2, VTR-1, VTR-2 (all include appropriate CVIUs), VBSP, SSRMS cameras	Can route video from external cameras, robotics cameras, internal camcorders, and payload racks to internal monitors, VTRs, orbiter, and ground
7A	Airlock CVIU and camcorder port,	Can route video from internal camcorder in Airlock
8A	EVSU-1, EVSU-2, EVSU-3	Permanent external connections
9A	4 S1 external camera port, two ETVCGs	Additional external camera views
11A	4 P1 external camera port, two ETVCGs	Additional external camera views
12A	1 P3 external camera port	Additional external camera views
13A	1 S3 external camera port	Additional external camera views
10A	Node 2 CVIU and camcorder port, Node 2 external camera port, IVSU-4	Can route video from internal camcorder in Node 2, additional external camera view, additional routing capability
16A	Hab CVIU and camcorder port, Hab external camera port, IVSU-5, VTR-3, VTR-4	Can route video from internal camcorder in Hab, additional external camera view, additional routing capability, additional recording and playback capability

4.9 Ku-Band Subsystem

As stated in the previous subsection, the VDS has an important interface with the Ku-Band Subsystem. ***It is the Ku-band VBSP. This interface provides for an end-to-end distribution of video from the ISS to the ground.*** The Ku-Band Subsystem is undergoing many design changes to include significant capabilities that were originally envisioned for the subsystem. These upgrades have not been approved by the Station Program at this time; however, when approved, they will make the Ku-band a superior communication system for support of technological operations. These proposed design changes are explained in the following sections.

4.9.1 Purpose

The purpose of the Ku-Band Subsystem is to provide an HDR return link for the U.S. Segment of the ISS. This return link is for real-time payload data, video (real-time and recorded), and recorded ISS systems telemetry (recorded on the Zone of Exclusion (ZOE) recorder). The ISS program has ***added a forward link capability to support the two-way transfer of files and video***

teleconferencing in support of the CDH System's Operations Local Area Network (LAN). These capabilities are implemented during Assembly Flight 6A.

4.9.2 Operations and Components

Experiments and video activity generate enormous amounts of data to be sent to the ground. The capacity of the Ku-band, while large, is limited. ***Flight controllers in the Payload Operations Integration Complex (POIC) configure the Ku-Band Subsystem to accommodate the gigabits of payload data generated per hour. At certain times they must make decisions that reconcile the amount of data generated among many experiments, video, and recorded systems telemetry to the capacity of this subsystem.***

The Ku-Band Subsystem is operated by flight controllers in the MCC-H, as well as the POIC, in coordination with the crew. This includes configuring the subsystem and routing the appropriate data to the subsystem for broadcast. Normally, the antenna pointing is automated based upon commands sent by the MCC-H Flight Controllers.

The MCC-H Flight Controller usually operates the Ku-band when a malfunction occurs. It is their responsibility to troubleshoot, assess, and possibly restore the subsystem's maximum capability. They are also responsible for playing back the recorded USOS systems telemetry (ZOE telemetry) through the Ku-band. This is done usually as a dump of the whole recorder. ***Dumping the ZOE recorder through Ku-band takes minutes as compared to hours through S-band.***

The ISS Ku-Band Subsystem sends 50 megabits per second (Mbps) of serial data to the ground from up to twelve different channels. Subsystem "overhead" is approximately 6.8 Mbps, so there is about 43.2 Mbps of usable capacity. Up to 4 of the 12 channels can contain video images; however, there is a restriction in that one video channel at a full frame rate (high video quality) uses up more than the entire 43.2 Mbps. The video frame rate often must be decreased to allow downlinking of other data. Up to eight of the channels are reserved for payload data. One of the payload data channels is shared between transmitting recorded telemetry and payload data.

The Ku-Band Subsystem is only single-string. If the VBSP fails, the subsystem still operates, but it has lost the capability to downlink video. If any other ORU fails, the Ku-band capability is lost. Also, structural blockage from the ISS itself greatly impacts the downlink communication availability. ***Ku-band coverage for the ISS is much lower than the Ku-band coverage for the orbiter, approximately 70 percent per orbit, on average at Assembly Complete. Coverage is less for earlier flights..***

There are several other enhancements being considered for this subsystem, post 8A. One enhancement is to ***increase the downlink data rate from 50 Mbps to 150 Mbps.*** Another enhancement is ***to add a Communications Outage Recorder (COR) for recording payload data.*** Currently, there is no method for recording payload data other than that provided by individual payloads. A third enhancement is ***the addition of two-way transfer of video signals with its associated audio and an interface with the Internal audio and video Distribution subsystems.***

The Ku-Band Subsystem consists of the following ORUs: VBSP; High Rate Frame Multiplexer (HRFM); High Rate Modem (HRM); and the Antenna Group ORUs, which are the

Transmitter/Receiver/Controller (TRC) and several antenna components. There is only one of each of the components. The VBSP, HRFM, HRM are located in the Lab Module. The Antenna Group is located on the Z1 truss. Figure 4-9 shows the route of the signal through the ORUs. Also, one interface to this subsystem not shown in Figure 4-9 is the GNC System. ***The GNC System provides data required for a backup method of antenna pointing in addition to providing initial pointing data for the autotracking method of pointing.***

The following subsections briefly discuss the components.

4.9.2.1 Video Baseband Signal Processor

The VBSP, shown with an interface with the VDS, converts the video signal from the fiber-optic format to a digital format to be processed by the Ku-Band Subsystem for transmission to the ground. ***The VDS selects and then sends to the VBSP up to four video signals for transmission***. After processing the video signals, the VBSP sends the video data to the HRFM.

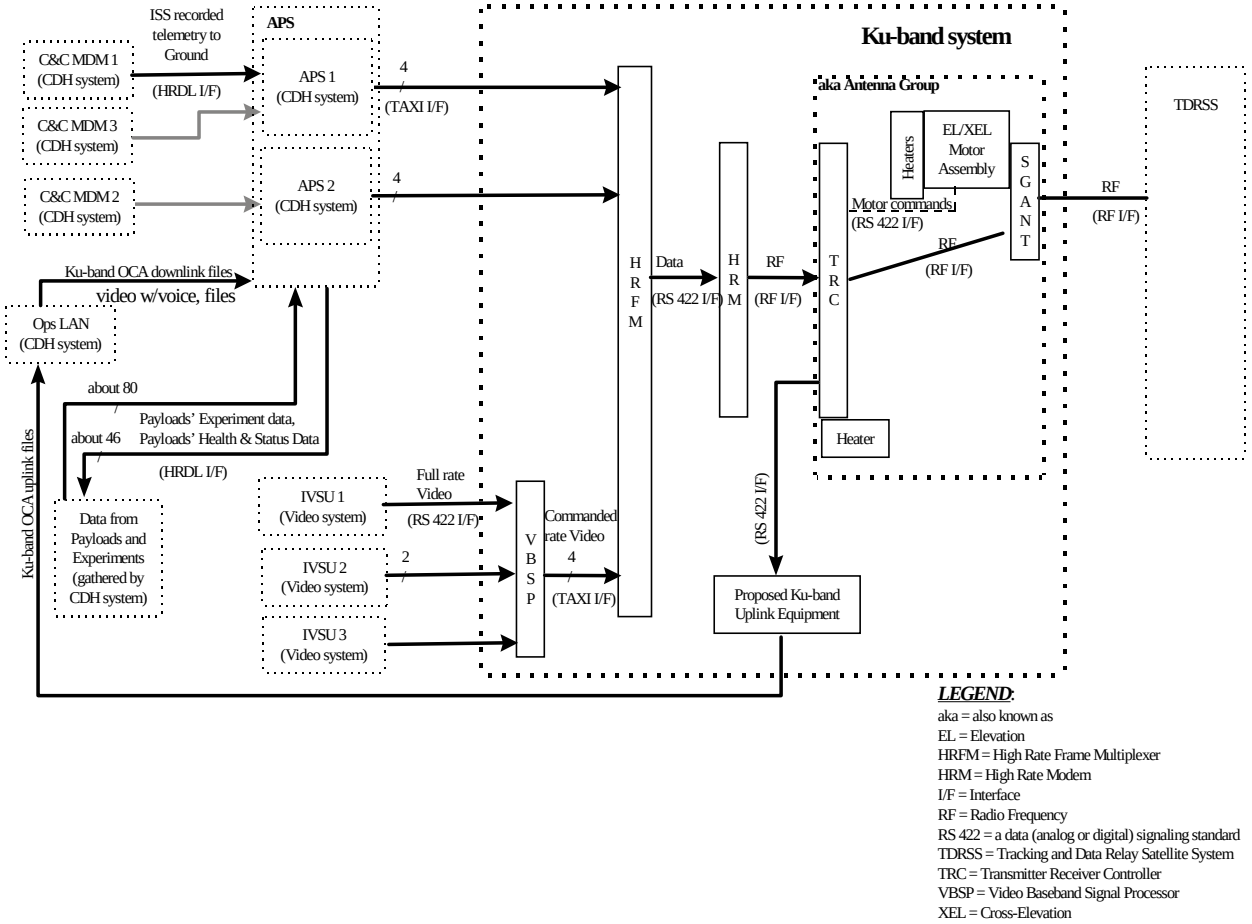

Figure 4-9. Ku-Band Subsystem

4.9.2.2 High Rate Frame Multiplexer

Note the interface between the HRFM and the Automated Payload Switches (APSs), which are ORUs in the CDH System. The APS multiplexes data from both payloads and the ZOE recorder (which provides recorded ISS systems telemetry) into eight channels. The HRFM accepts up to four channels of data from the VBSP and the ***eight channels of data from the APS***. ***The HRFM multiplexes, and R-S encodes these 12 together into one bit stream comprised of CADU-formatted data.*** The HRFM then sends the resulting baseband signal to the HRM.

4.9.2.3 High Rate Modem

The HRM modulates an RF signal and up-converts that signal to an Intermediate Frequency (IF). It sends this modulated IF signal to the Antenna Group ORUs.

4.9.2.4 Antenna Group

The Antenna Group up-converts the IF signal, amplifies it, and broadcasts the signal to the TDRS through the Ku-band directional gimbaled antenna. ***The Transmitter/Receiver/Controller (TRC) of the Antenna Group Assembly provides for "auto tracking," that is, the TDRS-received signal is used to point the antenna for broadcasting the return (downlink) signal.*** The TDRS transmits this data to the White Sands Ground Terminal for further distribution to ground facilities.

4.9.2.5 Application Software

The C&C MDM, through the Ku-band application software, controls and monitors the Ku-Band Subsystem. The C&C MDM sends commands to each component, and each component sends its status to the C&C MDM through the 1553 bus network. ***Since there is no redundancy in the subsystem, there can be no automatic switch to a redundant component or string.*** However, failures of individual data channels only impact those channels. Data on other channels can still be transmitted. Of course, while there is one 1553 bus connection to each ORU, there is dual redundancy in that each bus connection has two channels (A and B).

4.9.3 Russian Equivalent

The ROS Lira System provides two-way, high-speed radio communications with the ground through the Luch Relay Satellite System. The Lira System supports monochrome analog TV signal reception and simultaneous color and monochrome TV transmission using the PAL or SECAM formats. It transmits wide-band digital data, consisting of one of the following four combinations of information:

a. TV + voice + telemetry

b. TV + Continuous Data Steam (CDS) + telemetry

c. Digital voice + telemetry

d. CDS + telemetry

The Lira System can also transmit and receive digital data using the CDS format from/to the Regul Onboard System. Lira includes two transmitters and two receivers (one for course and one for fine direction finding) and a single modem. Transmission to and from the Luch System is through a 1.2-meter narrow beam antenna. Signal acquisition is accomplished by the use of omni-directional and semi-directional antennas.

Table 4-5 shows the expansion of the Ku-Band Subsystem capabilities during assembly of the ISS.

Table 4-5. Ku-band Subsystem assembly sequence

Flight	Hardware	Capability
3A	Ku-band antenna and transmitter/receiver on Z1 truss	External heaters with no telemetry. Heaters powered by one RPC
6A	Lab with Video Baseband Signal Processor, High Rate Frame Multiplexer, High Rate Modem. Planned Forward Receiver	Video downlink, payload experiment downlink, ZOE recorder downlink Two-way teleconferencing and file transfer to/from OPS LAN SSC/UCA equipment. Possibly, commanding

4.10 Summary

The C&TS is divided into six subsystems: the Internal Audio Subsystem (IAS), the S-Band Subsystem (S-band), the Ultrahigh Frequency (UHF) Subsystem (also known as the Ultrahigh Frequency Communication System (UCS)), the Video Distribution Subsystem (VDS), the Ku-Band Subsystem (Ku-band), and the Early Communication Subsystem.

The USOS C&T Subsystems work together to provide the communication services needed by the USOS to carry out the mission of the ISS. The S-Band Subsystem transmits voice, commands, telemetry, and files. The IAS distributes audio onboard the Station and to external interfaces. The VDS distributes video onboard the Station and to external interfaces, including the Ku-band for downlink. The UHF Subsystem is used for EVA and proximity operations, while the Ku-Band Subsystem is used for payload downlink and video and file two-way transfer.

Questions

1. Which of the following is NOT a part of a command path of the ISS?
   a. Regul
   b. S-band
   c. VHF
   d. UHF
2. U.S. Segment Video Subsystem receives a video input from the ROS Video Subsystem.
   a. True
   b. False
3. The S-Band Subsystem has an interface with the
   a. UHF Subsystem
   b. Audio Subsystem
   c. Video Subsystem
4. At Flight 8A, if the S-band string fails, which of the following is the MOST direct audio link to the ground?
   a. UHF Subsystem
   b. VHF System
   c. Ku-Band Subsystem
5. U.S. payload experiment data is transmitted to the ground by
   a. S-band
   b. Ku-band
   c. Regul
6. Which C&T Subsystem multiplexes video and payload data for transmission to the ground?
   a. S-band
   b. Ku-band
   c. Lira

7. The U.S. Subsystem that links the UHF and S-band Subsystems is

    d. Ku-band

    e. VDS

    f. IAS

8. What C&T Subsystem multiplexes audio and telemetry data for transmission to the ground?

    a. Ku-band

    b. S-band

    c. Lira

9. After 6A, recorded systems telemetry normally reaches the ground through which C&T Subsystem?

    a. Ku-band

    b. S-band

    c. UHF

    d. VDS

10. Primary commanding of the U.S. Systems is done through which C&T Subsystem?

    a. Ku-band

    b. S-band

    c. UHF

11. The VDS's most important interface for video data is with the

    a. IAS

    b. SSRMS

    c. CDH

12. C&W tones are sent to the ROS by the IAS.

    a. True

    b. False

13. The CDH OPS LAN receives forward link data from which ISS Subsystem.

    c. Ku-band

    d. S-band

    e. Lira

14. The Russian Segment Communication Subsystem that transmits using a high data rate is

    a. VHF1

    b. Regul

    c. Lira

15. What ROS Communication Subsystem cannot directly use the LUCH satellite?

    a. Lira

    b. Regul

    c. VHF2

16. What ISS Communication System is used to command the Station during orbiter rendezvous?

    a. VHF

    b. S-band

    c. UHF

17. The IAS distributes audio to the docked orbiter, EVA astronauts and _____.

    a. Ku-band Subsystem

    b. Lira Subsystem

    c. Russian ACUs

18. Files can be received from the ground by which C&T Subsystem?

    a. VHF

    b. Ku-band

    c. UHF

Section 5
Thermal Control System Overview

5.1 Introduction

Throughout the life of the Space Station, experiments and equipment inside the modules are generating heat that must be removed. Outside the modules, experiments and equipment must be protected from the environment in low Earth orbit. ***The purpose of the Thermal Control System (TCS) is to maintain Space Station equipment and payloads within their required temperature ranges.***

This section provides an overview of the Space Station TCS. The components and general operational capabilities of the TCS are presented, as well as the various interfaces with other Space Station systems.

5.2 Objectives

After completing this section, you should be able to:

- Compare and contrast the major capabilities performed by the United States Orbital Segment (USOS) and Russian Orbital Segment (ROS) TCS
- Identify the functions of each of the TCS subsystems
- Explain the redundancy scheme for Internal and External TCS loops and the operational consequences of loss of those major functions.

5.3 TCS Architecture

In order to understand how the thermal control process takes place, a look at the overall Space Station TCS architecture is necessary. As shown in Figure 5-1, the Space Station TCS is composed of Passive and Active thermal control systems.

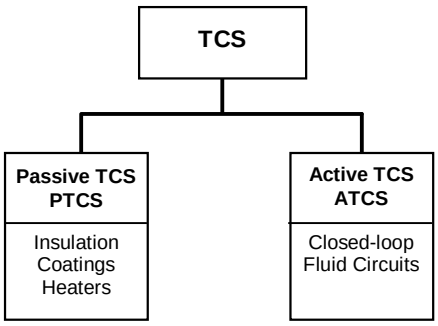

Figure 5-1. Space Station TCS architecture

The Passive Thermal Control System (PTCS) consists of insulation, coatings, and heaters. Its components generally have few operational requirements and require low maintenance. PTCS components are also less complex and easier to implement.

The Active Thermal Control System (ATCS) uses a mechanically-pumped fluid to perform heat transfer. Although this approach is more complex, the ATCS handles much greater heat loads and provides a higher degree of control over how the heat loads are managed.

The USOS and ROS use this same architecture, modified to meet the needs of individual elements. ROS TCS is very similar in design to the Mir space station and functionally similar to USOS TCS. The main difference is that each module has its own internal and external TCS (i.e., the modules do not share an internal and external systems as in the USOS).

This section addresses the USOS architecture first, followed by a discussion of ROS TCS.

5.4 USOS Passive Thermal Control System

Since temperatures vary drastically across the Space Station, thermal control requirements are different and unique to each location. Temperatures along the truss decrease as the distance from the modules increases because most of the heat is generated around the module area. Temperatures around this area can vary from -126° to 149° C (-195° to 300° F), while temperatures at the outer limits of the truss can vary from -184° to 149° C (±300° F). Passive thermal control is the first method evaluated when equipment or payloads need to be protected because it is less expensive and simpler than active thermal control.

5.4.1 Purpose

The PTCS is responsible for maintaining USOS structures and external equipment within an allowable temperature range. With no fluid interface, it isolates USOS elements from the external environment. PTCS components are designed to minimize maintenance and refurbishment.

5.4.2 USOS PTCS Components

The three components used in the PTCS are insulation, surface coatings, and heaters. These components are used to maintain temperatures within acceptable ranges based on the local thermal environment.

Multilayer Insulation: Multilayer Insulation **(**MLI) is used to control heat transfer rates and minimize temperature gradients. Just as home insulation prevents heat from entering or escaping, an MLI blanket performs the same function for the Space Station.

As shown in Figure 5-2, the MLI consists of several layers. Overall thickness varies from 3.2 to 6.4 mm (0.125 to 0.25 inch). A single aluminized outer cloth layer provides protection for the intermediate layers from atomic oxygen, meteoroids, or debris. The intermediate layers provide very efficient thermal radiation shielding. An aluminized inner layer provides flammability protection and also helps to protect the intermediate layers from damage during handling and

installation. The MLI blankets are also designed to allow trapped gases to escape during launch. Improper venting of the blankets could result in inflation of the blankets causing them to come loose or damage themselves or the surrounding structure.

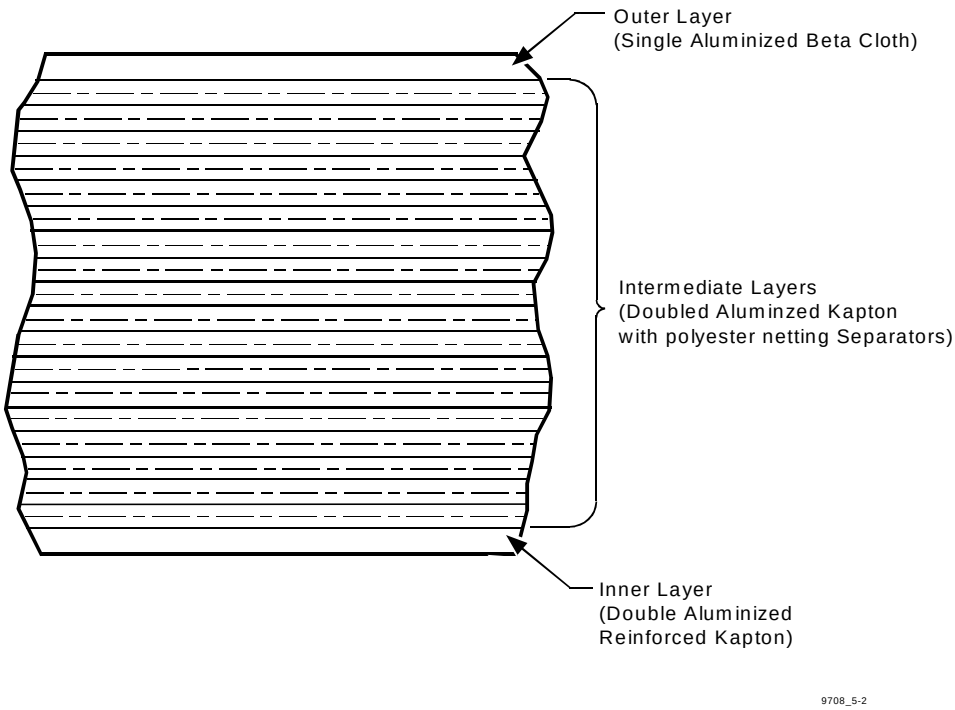

Figure 5-2. MLI design

MLI is used both inside and outside the modules, on truss segments, and on Orbital Replacement Units (ORUs). It is also used as a safety device to prevent crew contact with extreme temperatures.

Surface Coatings and Paints: Since thermal requirements vary from location to location, surface finishes vary throughout the Space Station. Thermal coatings and paints must be compatible with the environment and must be resistant to atomic oxygen and radiation.

The concepts of emissivity and absorptivity are critical to understanding surface finishes. All matter continuously emits electromagnetic radiation. Emissivity deals with the ability of an object to emit radiant energy (to radiate), while absorptivity describes the ability of an object to absorb radiant energy falling upon it. (Reflectivity is the opposite of absorptivity and should not be confused with emissivity.)

Emissivity and absorptivity values are defined in relation to a theoretical ideal called a "blackbody." If such a surface existed, it would emit the theoretical maximum amount of energy per unit area at each wavelength for any given temperature. It would also absorb all the radiant energy incident upon it. Such a surface would have emissivity and absorptivity values of 1.0, while a surface that did not emit or absorb any energy (a theoretically perfect reflector) would have values of 0.0. All real surfaces fall somewhere between these two ideals and are sometimes

referred to as “gray bodies.” Their emissivity and absorptivity values can be determined empirically and must be between 0.0 and 1.0.

The color of a surface may not indicate its overall capacity to absorb or reflect since radiant energy may be outside the visible spectrum. For example, snow is highly reflective of visible radiation but strongly absorbs infrared. Likewise, black objects absorb most visible light but may reflect other wavelengths.

Different types of finishes are used to provide various degrees of thermal control for equipment. By using coatings or paints with different emissivity or absorptivity characteristics, an ORU can either be “warmed” or “cooled” as required. For example, TCS radiators use high emissivity and low absorptivity coatings to help radiate excess heat to space.

The two types of finishes are anodized coatings which change the physical characteristics of the surface and paints which add a layer of material on top of the surface.

Table 5-1 shows typical surface finish properties.

Table 5-1. Typical surface finish properties

Surface finish	Use	Emissivity*	Absorptivity*
Sulfuric acid anodize	Primary and secondary structure	0.85	0.49
Z-93	EETCS radiators	0.91	0.15

*Values are typical at initial application; some degradation will occur over time.

Heaters: Electrically-powered heaters are used in locations where it is impossible or impractical to satisfy both high and low temperature requirements through the use of other PTCS or ATCS implementations. For example, heaters are used to prevent external TCS fluid lines from freezing in extremely cold environments and/or “no flow” conditions. There are over 300 heaters throughout the USOS on ORUs and modules.

Three types of heaters, operational heaters, survival heaters, and shell heaters, are used on the USOS. Operational heaters keep a component at or above a minimum temperature while it is operating. Survival heaters prevent a component from damage by low temperatures while it is not powered. Shell heaters prevent condensation from forming on the interior walls of pressurized modules.

Typical heater design includes a resistive wire element packaged in a high-temperature insulating material. Heaters are bonded with adhesive to the external surface of a module, the inside of an ORU, or wrapped around fluid lines. When electrical power is applied to the heater by a Remote Power Controller (RPC), the temperature of the element rises and heat is transferred by conduction to the component.

In order to maintain proper temperatures, sensing devices are placed near the heaters. Temperature sensors typically use a wire element that displays a linear resistance change for a

corresponding temperature change. The resistance is measured as a voltage, which is calibrated to the properties of the sensor element. The voltage is detected by a Low Level Analog (LLA) card in a Multiplexer-Demultiplexer (MDM) and control of heaters is accomplished through software in the MDM. Heaters can also be controlled by thermostats, which regulate the temperature of a component independently. Typical heater control is illustrated in Figure 5-3.

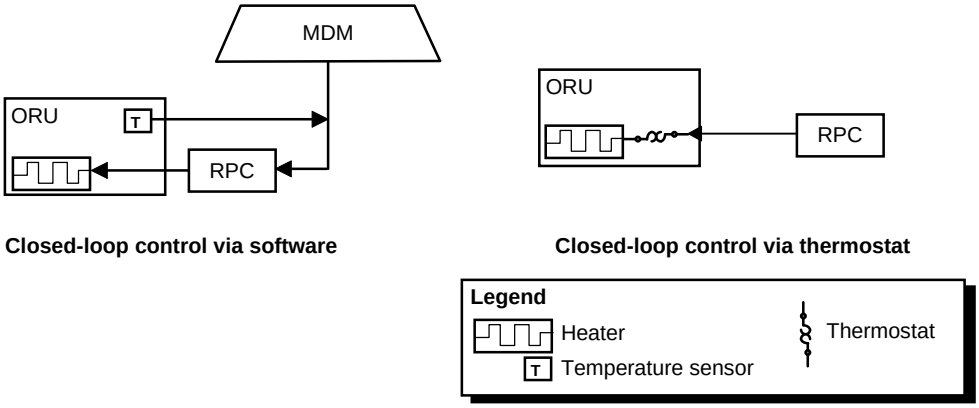

Figure 5-3. Typical heater control

Although heaters have interfaces with the Electrical Power System (EPS) and Command and Data Handling (CDH), they are considered passive devices since they do not employ an active fluid.

Heat Pipes: An additional form of passive thermal control is the heat pipe. Heat pipes provide a near-isothermal method for transporting heat over short distances and have no moving parts.

A heat pipe operates by using the latent heat of vaporization of a working fluid (ISS applications use ammonia) to absorb heat at one end of a pipe and reject the heat into space at the other end. The working fluid is evaporated at the warm end of the pipe (where heat-generating equipment is located) and travels as vapor to the cool end (which is exposed to space). The fluid condenses and gives up its latent heat and returns as a liquid by capillary action. Several pipes are usually arranged side by side with a protective covering and structural attachments.

Heat pipes are used on the USOS to provide additional heat rejection for two Direct Current-to-Direct Current Converter Units (DDCUs), two Remote Power Distribution Assemblies (PRDAs), and the Baseband Signal Processor (BSP) mounted on the Z1 Truss Segment and the two Node 1 Multiplexer/Demultiplexers (MDMs) mounted on the Pressurized Mating Adapter 1 (PMA-1). They are also used on the ROS (see Section 5.9).

5.5 USOS Active Thermal Control System

An ATCS is required when the environment or the heat loads exceeds the capabilities of the PTCS. As shown in Figure 5-4, an ATCS uses a mechanically-pumped fluid in closed-loop circuits to perform three functions: heat collection, heat transportation, and heat rejection.

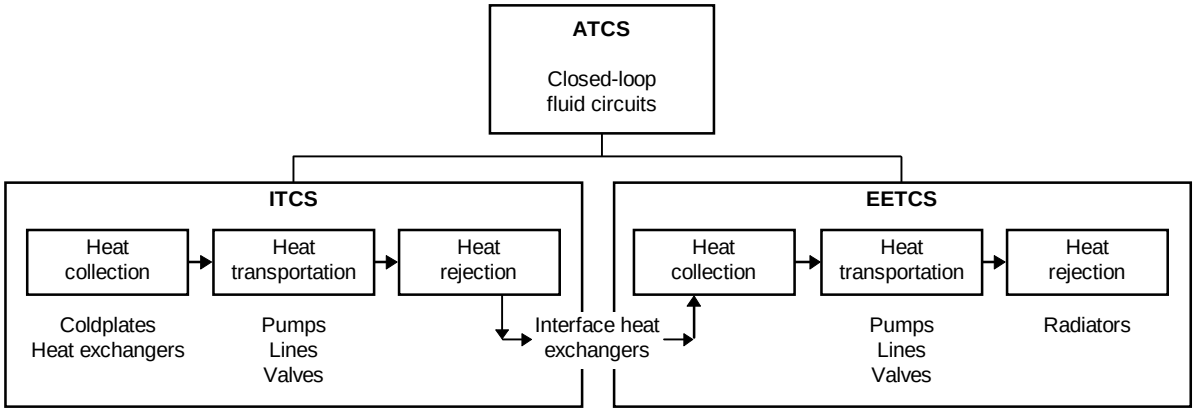

Figure 5-4. USOS ATCS architecture

5.5.1 Purpose

USOS ATCS is composed of internal systems that collect heat from equipment within elements and an external system that rejects the heat to space. The Internal Thermal Control System (ITCS) uses water, which is used because it is an efficient thermal transport fluid and is safe inside a habitable module. The Early External Thermal Control System (EETCS) uses anhydrous ammonia, which was chosen for its high thermal capacity and wide range of operating temperatures. The water and ammonia used in the ITCS and EETCS remain in a liquid state throughout the system.

The ITCS described in this training manual is based on the U.S. Laboratory Module (Lab). The ITCS for the U.S. Habitation Module (Hab), Japanese Experiment Module (JEM), Node 2, and Columbus Orbital Facility (COF) are similar.

5.6 Lab Internal Thermal Control System

All pressurized elements are outfitted with an ITCS. Some elements, such as Node 1 and the Airlock, only contain some heat collection devices and fluid lines, while other elements have complete thermal loops.

5.6.1 Purpose

The purpose of the Lab ITCS is to maintain equipment within an allowable temperature range by collecting, transporting, and rejecting waste heat.

The Lab contains two independent loops, a Low Temperature Loop (LTL) and a Moderate Temperature Loop (MTL). This approach allows for segregation of the heat loads, simplifies heat load management, and provides redundancy in case of equipment failure (see Figure 5-5). The LTL operates at 4° C (40° F) and services systems equipment requiring low temperatures, such as the Environmental Control and Life Support System (ECLSS) Common Cabin Air Assembly (CCAA) and some payload experiments. The MTL operates at 17° C (63° F) and provides most of the cooling for systems equipment (i.e., avionics) and some payload experiments.

Normally, both ITCS loops operate independently in what is known as dual-loop mode. Under certain conditions (for example, a pump failure in one of the loops), the two loops can be connected. This configuration is known as single-loop mode and is used to prevent a loss of cooling to critical systems.

REVISIONS		
DATE	NAME	VERSION:
5-28-98	LEE WEBSTER	A

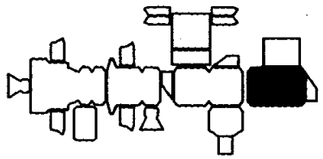

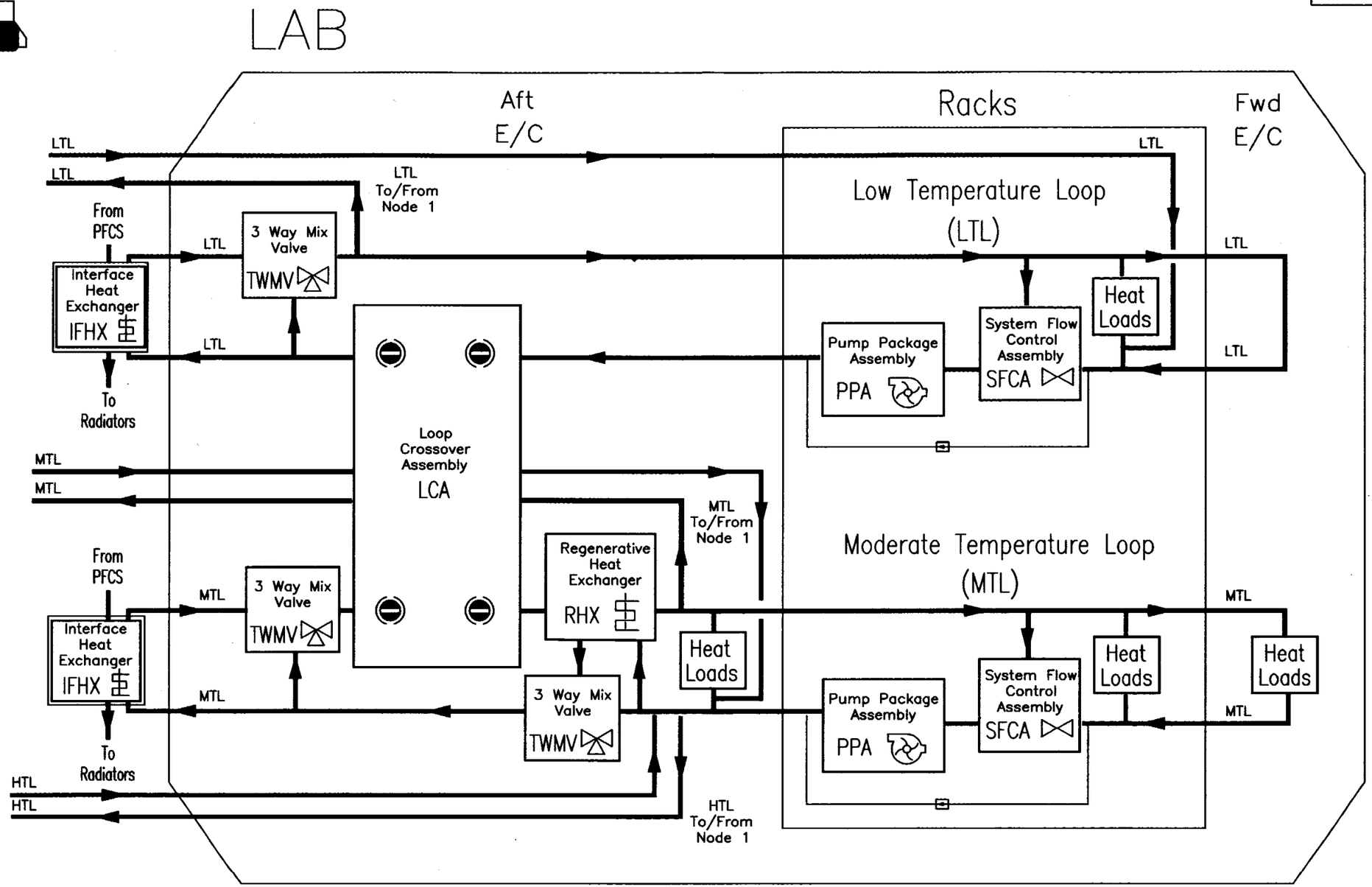

LTL=Low Temperature Fluid Lines
MTL=Moderate Temperature Fluid Lines
HTL=High Temperature Fluid Lines

Figure 5-5 Lab ITCS

TD9702A

SIGNATURE		DATE	NATIONAL AERONAUTICS AND SPACE ADMINISTRATION LYNDON B. JOHNSON SPACE CENTER HOUSTON, TEXAS
DSGN	LEE WEBSTER	2-2-98	
ENGR	KATHY BOLT	6-2-98	INTERNAL THERMAL CONTROL SYSTEM LEVEL 1B OVERVIEW
ENGR			
ENGR			
APP			
ENGR			PROGRAM ISS / SIZE D / DWG NO. TCS1B-I-8A / REV A
APP			
	PCN		SCALE NONE / SHEET 1 OF 1

[TCS1B-I-8A]

5.6.2 Lab ITCS Components

The components that make up the ITCS can be categorized by function into three major groups: heat collection ORUs, heat transportation ORUs, and heat rejection ORUs.

5.6.2.1 *Heat Collection ORUs*

In order to collect heat, the ITCS uses coldplates and heat exchangers. Most heat collection devices are located in the racks and others are located in the endcones.

Coldplates: Coldplates acquire heat from systems, avionics, and payload equipment. Heat-generating equipment is mounted to the surface of the coldplate where the heat is transferred by conduction to the coldplate surface. The heat is then transferred by convection to water flowing through the internally finned structure of the coldplate. There are no EPS or CDH interfaces with coldplates.

Heat Exchangers: Heat exchangers are similar in function to coldplates, but provide a fluid-to-fluid transfer of heat. Heat exchangers are composed of alternating layers of finned passages that allow heat collected by another fluid to be transferred to the ITCS water. Heat exchangers may also be used to condense moisture from the air, as is the case with the Common Cabin Air Assembly (CCAA). There are no EPS or CDH interfaces with heat exchangers.

Another important ITCS ORU is the Regenerative Heat Exchanger (RHX). When the ITCS is in single-loop mode, the RHX warms LTL water before it flows through MTL lines to prevent condensation.

5.6.2.2 *Heat Transportation ORUs*

Heat transportation components include pumps, lines, accumulators, filters, Quick Disconnects (QDs), and valves. These components move and direct the flow of water around the loops.

Pump Package Assembly: In order for the coldplates and heat exchangers to transfer their acquired heat to the water, the water must be circulating. A centrifugal pump, which is part of the Pump Package Assembly (PPA), provides this circulation. There is one PPA for each complete loop (see Figure 5-5).

Another important component of the PPA is the accumulator. It maintains inlet pressure to the pump and accommodates volumetric changes in a loop because of temperature variations. If a leak occurs, the accumulator can replenish lost water. Other PPA items include filters, a gas trap, a flowmeter, and temperature and pressure sensors. Control of the PPA is accomplished by software in the MDMs.

Lines: ITCS lines consist of rigid titanium and flexible Teflon tubing throughout the standoffs and endcones. Supply lines carry cooled water to the heat loads and the return lines carry warmed water from the heat loads to the Interface Heat Exchanger (IFHX). The lines are arranged so that water flows through the racks in parallel. LTL lines are wrapped with insulation since the water temperature is below the dewpoint of the air in the module. MTL lines are not insulated.

Tee sections are provided for each rack location and flex hoses are used to connect the tubing at the tee sections to the individual racks. The flex hoses plug into the base of the racks at the Rack Interface Panel (RIP) with self-sealing QDs. These QDs are used during rack changeout or leak isolation activities.

Valves: The following valves regulate and direct the flow of water through each loop. These valves are controlled by software in the MDMs and have manual override capability:

- Rack Flow Control Assembly (RFCA) - Regulates water flow through payload racks
- Manual Flow Control Valve (MFCV) - Provides fixed water flow through system racks (these valves are not software-controlled). Next to each MFCV is a Rack Standalone Temperature Sensor (RSTS) which is monitored by software in the MDMs.
- System Flow Control Assembly (SFCA) - Maintains a constant differential pressure between the supply and return lines. Includes a Shutoff Valve (SOV) to isolate the PPA.
- Loop Crossover Assembly (LCA) - Allows the MTL and LTL to be connected in series (single-loop mode) to avoid a loss of cooling if a PPA fails.
- Three-Way Mixing Valve (TWMV) - Maintains proper water temperature.

5.6.2.3 *Heat Rejection ORUs*

Interface Heat Exchanger: The Interface Heat Exchangers (IFHXs) are the heat-exchange interfaces between the two ITCS loops and the EETCS. The IFHXs are mounted on the aft endcone of the Lab external to the pressurized volume.

5.6.3 Lab ITCS Interfaces

The ITCS interfaces with three other systems:

- EPS provides power to operate ITCS pumps and valves
- ECLSS-supplied nitrogen pressurizes the PPA accumulator
- C&DH MDMs provide commands and telemetry

5.7 USOS Early External Thermal Control System

Since the Lab becomes operational before the permanent External Thermal Control System (ETCS) is assembled, a temporary external cooling system is needed. External cooling from the Russian segment is not possible because there are no operational interfaces between the USOS and the ROS thermal systems. Instead, a modified version of the Photovoltaic Thermal Control System (PVTCS) called the Early External Thermal Control System (EETCS) acts as a temporary thermal system. ***The EETCS is needed until the components of the permanent ETCS are launched and activated***. Once the permanent ETCS becomes operational, the EETCS is deactivated. After deactivation, portions of the EETCS are used as components on PVTCS loops.

5.7.1 Purpose

The EETCS provides temporary heat rejection for the Lab using liquid ammonia to perform heat transfer. There are two identical loops (designated as Loop A and Loop B) operating at 2° to 5° C (35° to 41° F). Each loop is connected to an IFHX and both loops flow through the two radiators, providing a total of 14 kW of heat rejection for the Lab, Node 1, Mini-Pressurized Logistics Module (MPLM), and Airlock (Figure 5-6). Loop A interfaces with the LTL IFHX and Loop B interfaces with the MTL IFHX. All of the EETCS components are located outside the pressurized volumes to prevent crew contact with ammonia.

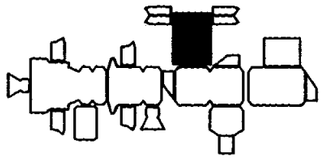

P6

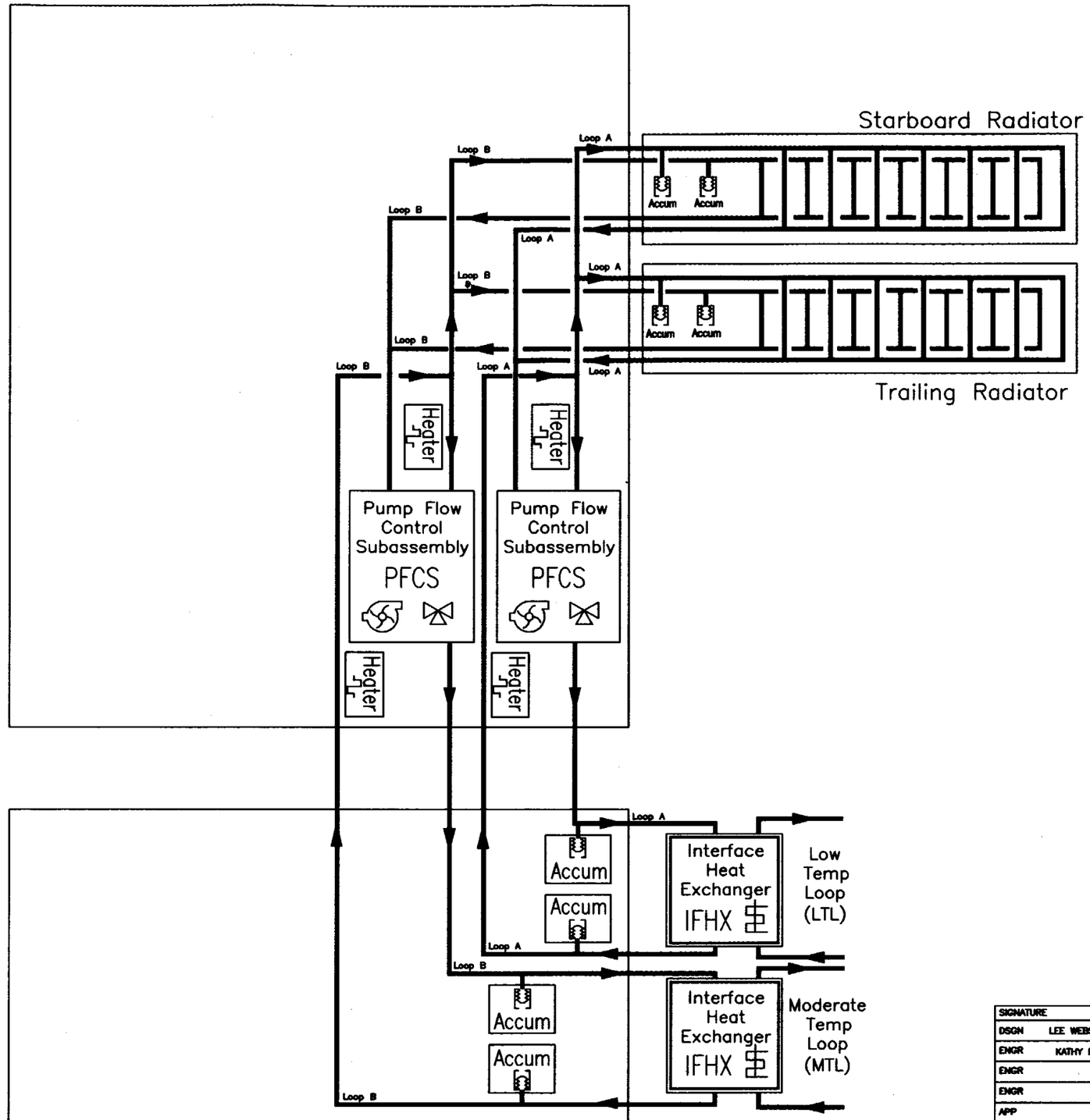

Z1

Figure 5-6 Early External Thermal Control System Level 1B Overview

TD9702A

REVISIONS		
DATE	NAME	VERSION:
5-28-98	LEE WEBSTER	A

SIGNATURE		DATE
DSGN	LEE WEBSTER	2-2-98
ENGR	KATHY BOLT	6-2-98
ENGR		
ENGR		
APP		
ENGR		
APP		
	PCN	

NATIONAL AERONAUTICS AND SPACE ADMINISTRATION
LYNDON B. JOHNSON SPACE CENTER HOUSTON, TEXAS

EARLY EXTERNAL THERMAL CONTROL SYSTEM LEVEL 1B OVERVIEW

PROGRAM	SIZE	DWG NO.	REV
ISS	D	TCS1B-EE-8A	A

SCALE NONE — SHEET 1 OF 1

[TCS1B-EE-8A]

5.7.2 USOS EETCS Components

As with the ITCS, the major components of the EETCS may also be classified into three functional groups: Heat Collection ORUs, Heat Transportation ORUs, and Heat Rejection ORUs.

5.7.2.1 *Heat Collection ORUs*

Interface Heat Exchangers: The two Interface Heat Exchangers (IFHXs) are the only heat collection components in the EETCS. The IFHXs include a heat exchanger, a bypass valve, an isolation valve, a temperature sensor, and two pressure relief valves. While commands and telemetry are available for the temperature sensor and the bypass and isolation valves, the pressure relief valves operate automatically.

Each EETCS loop has in-line heaters wrapped around portions of the tubing on the P6 Truss. These heaters are used during low heat load conditions and are turned on and off by software while the system is operating to maintain the minimum operating temperature.

Trace heaters are located on the EETCS plumbing to prevent ammonia freezing during non-operational periods. These heaters are thermostatically controlled (no software interfaces).

5.7.2.2 *Heat Transportation ORUs*

Heat transportation components include pumps, lines, accumulators, QDs, and flow control valves. These components move and direct the flow of ammonia around the loops.

Pump and Flow Control Subassembly: Circulation of the ammonia is provided by the Pump and Flow Control Subassembly (PFCS). The major components in the PFCS include two pumps, a Flow Control Valve (FCV), a Signal Conditioning Interface (SCI), a Local Data Interface (LDI), and an accumulator. Although the PFCS contains two pumps for redundancy, only one pump will be operated at a time.

The temperature of the ammonia is maintained by the FCV which mixes “cool” ammonia exiting the radiators with “warm” ammonia bypassed from the inlet to the radiators. While the FCV position is normally controlled by a closed-loop software algorithm, the capability for the crew or flight controllers to command the FCV to a specific position is also available. Control of the PFCS is accomplished via software in the Photovoltaic Controller Unit (PVCU) MDMs, which interface with the LDI. The PVCU software performs many system functions, such as loop leak detection, pump control, heater control, and loop temperature control.

The accumulator compensates for expansion and contraction of ammonia due to the temperature changes and keeps the ammonia in the liquid phase via the fixed charge of pressurized nitrogen gas on the back side of its bellows. In case of a leak, the accumulator also contains additional volume to replace lost ammonia. Other PFCS items include filters, a dual check valve, as well as pressure, temperature, and accumulator quantity sensors.

Other Heat Transportation Equipment: EETCS equipment is located on the P6 truss, the Z1 truss, and the Lab. The two radiators and two PFCSs are located on the P6 Truss. Insulated,

stainless steel tubing carries ammonia between these components. The same type of tubing as well as two more accumulators are located on the Z1 Truss. Connections between segments are made with flex hoses and QDs. There are flex hoses and QDs between the P6 truss and Z1 truss, and between the Z1 truss and the Lab (IFHXs).

5.7.2.3 *Heat Rejection ORUs*

Radiators: Heat collected from the IFHX by the EETCS ammonia loops is radiated to space by two radiators. As shown in Figure 5-7, each radiator contains seven aluminum panels with stainless steel flow tubes or passages. The seven panels are hinged together and arranged in a folding array using manifolds and flexible hoses to connect the fluid path between the panels. Warm ammonia from both loops flow down one side of the radiator, through the panels where it is cooled, and then back up the opposite side. The complete seven-panel radiator array is considered an ORU.

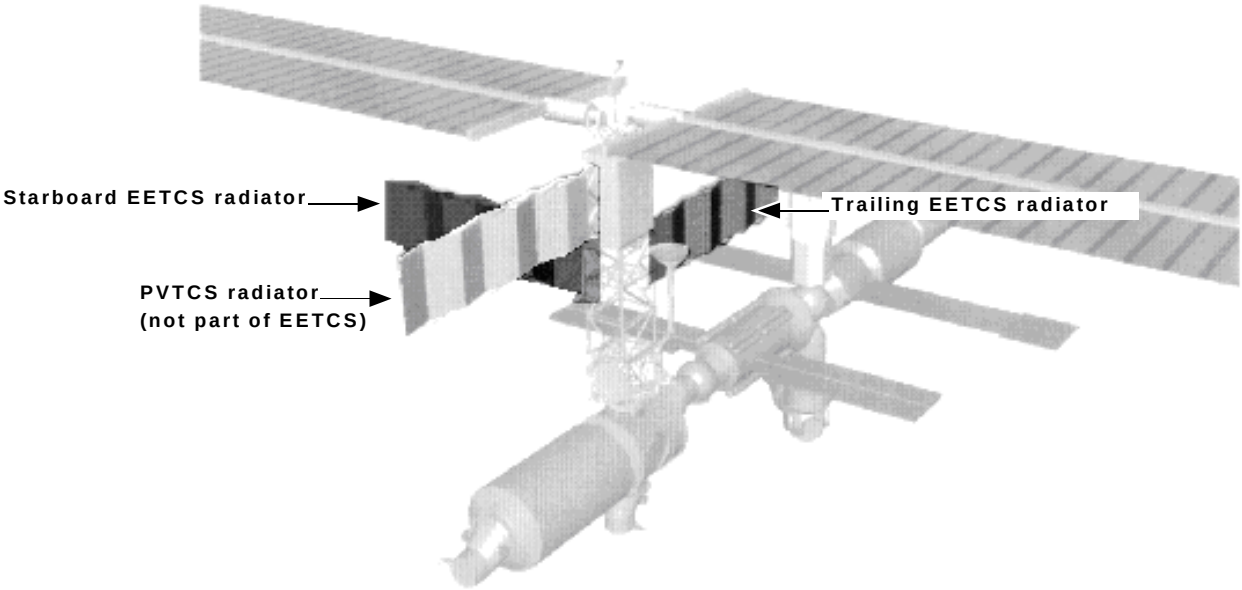

Figure 5-7. EETCS radiators

The two EETCS radiators can be deployed or retracted automatically through ground or crew commands or manually by an Extravehicular Activity (EVA) crewmember. When the radiator is retracted, a cinching mechanism holds it in the stowed position during non-operational periods and radiator replacement activities.

5.7.3 USOS EETCS Interfaces

The EPS provides power to each PFCS, the radiator deployment motors, and the in-line and trace heaters. The valves within the IFHX ORU also require power, but that power is supplied through the Node 1 MDMs instead of a direct interface with an RPCM. EETCS commands and telemetry are routed to ground workstations and crew laptops through the MDMs.

5.7.4 USOS External Thermal Control System

The ETCS replaces the EETCS and, once operational, continues the critical functions of collecting, transporting, and rejecting waste heat from USOS elements. Much like the EETCS, it is a mechanically-pumped, single-phase subsystem that also uses ammonia as a coolant. However, ***the ETCS is designed to handle the heat loads for the entire USOS at assembly complete***. The major differences between the temporary EETCS and the permanent ETCS are summarized in Table 5-2.

Table 5-2. EETCS/ETCS comparison

Temporary EETCS	Permanent ETCS
Heat Collection • Two IFHXs (Lab)	**Heat Collection** • 10 IFHXs – Lab (2), Hab (2), and Node 2 (6 total for Node 2, JEM, and COF) • Additional external equipment mounted on coldplates
Heat Transportation • Two loops operating at 771 kg/hr (1700 lb/hr) • One PFCS (two pumps) in each loop	**Heat Transportation** • Two loops operating at 3629 kg/hr (8000 lb/hr) • One Pump Module (PM) (one pump) in each loop
Heat Rejection • Two fixed radiators • Each is approximately 13 m (44 ft) long • Both loops flow through both radiators • Total heat rejection capability is 14 kW	**Heat Rejection** • Six moveable radiators • Each is approximately 23 m (75 ft) long • One loop flows through each set of three radiators • GNC software required to determine radiator position • Total heat rejection capability is 75 kW

5.8 USOS TCS Software

This subsection contains an overview of TCS software in the USOS.

5.8.1 Purpose

TCS software is used to control and monitor the system. Actions such as system startup, loop reconfiguration, and valve positioning for flow and temperature control are executed by the TCS software automatically or via commands from crew laptops or ground workstations. Telemetry from the various temperature, pressure, flow, and quantity sensors is monitored by TCS software and displayed on crew laptops or ground workstations. In addition, Fault Detection, Isolation, and Recovery (FDIR) software is used to monitor the performance of the TCS and, if there is a problem, alert the crew and controllers. In some cases FDIR software initiates recovery actions.

5.8.2 Architecture

Figure 5-8 shows how USOS TCS software is organized. At the top of the figure, it can be seen that the Command and Control (C&C) software resides in the Tier 1 MDMs. It is at this level the crew and controllers send commands to and view telemetry from the TCS. Software functions for the three C&C MDMs are redundant. In Tier 2, FDIR software is housed in the Internal Systems MDMs (INT MDMs) and the Node 1 (N1) MDMs (EETCS FDIR software also resides in the PVCU MDMs). The software in the Tier 2 MDMs processes commands from the C&C software, executes algorithms, and generates commands to the Tier 3 MDMs and certain TCS ORUs. Software functions for these MDMs are also redundant. The Tier 3 MDMs are the Laboratory Systems MDMs (LA MDMs) and the PVCU MDMs. The software in these MDMs interfaces directly with the ITCS and EETCS ORUs.

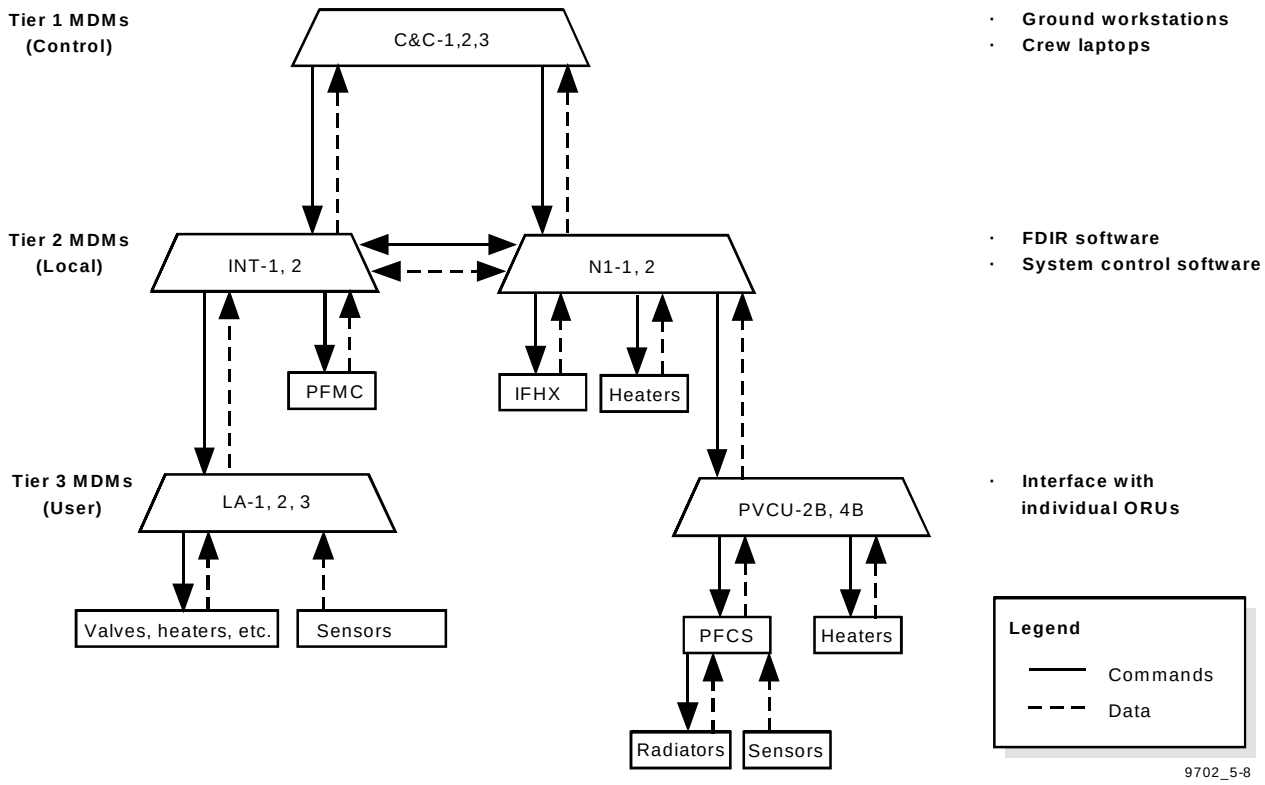

Figure 5-8. USOS TCS software architecture (Flights 5-A through 12-A)

Lab ITCS Software: Commands from ground workstations or crew laptops, as well as commands generated by C&C software, are passed by the C&C MDM to the active INT MDM (one MDM is active, with the other standing by to take over if necessary). Software within the INT MDMs processes the commands, executes algorithms, and generates commands to the LA MDMs and the Pump/Fan Motor Controller (PFMC). The PFMC processes commands from the INT MDM and generates commands to the pump motors.

The LA MDMs process commands from the INT MDM, execute algorithms, and generate commands to Lab ITCS hardware. LA-1 interfaces with LTL hardware, LA-2 interfaces with MTL hardware, and all three LA MDMs interface with different RFCAs and RSTSs.

USOS EETCS Software: Commands from ground workstations or crew laptops, as well as commands generated by C&C software, are passed by the C&C MDM to the N1 MDMs. The two N1 MDMs control IFHX valves and process telemetry from the IFHX sensors. N1-1 interfaces with the IFHX in Loop A and N1-2 interfaces with the IFHX in Loop B. FDIR software also resides in the N1 MDMs.

The two PVCU MDMs control the remaining EETCS functions. The PVCU MDMs receive telemetry from and issue commands to the individual pumps and valves in the PFCS as well as the radiator deployment and retraction motors, PVCU-4B is primary, with PVCU-2B as backup. Note that the PVCU MDMs also perform FDIR.

5.9 ROS Thermal Control System

At assembly complete, the ROS will include the Functional Cargo Block (FGB), Service Module, Universal Docking Module, Research Modules, and Life Support Modules. All of these elements share common design characteristics.

5.9.1 Purpose

The purpose of the ROS TCS is to maintain equipment within an allowable temperature range by collecting, transporting, and rejecting waste heat from ROS pressurized elements. There are no interfaces between ROS TCS and the USOS TCS.

ROS pressurized elements are each outfitted with two internal and two external cooling loops. The coolant in each internal loop travels through the pressurized modules where it collects heat from systems equipment, avionics, and experiments. It then flows through an IFHX where the heat load of the internal equipment is transferred to the external system and is radiated and rejected to space.

The ROS TCS described in this manual is based on the FGB. TCS for the other ROS modules is similar.

5.9.2 FGB TCS Subsystems

FGB TCS is subdivided into two major groups: Passive TCS and Active TCS.

5.9.2.1 *FGB Passive TCS*

FGB passive TCS design is similar to USOS PTCS. FGB passive TCS relies on thermal blankets and surface coatings in order to maintain the temperatures of the structure and external equipment within allowable limits.

Shell heat pipes acquire heat from the internal loop and circulate ammonia around the exterior of the pressure shell. This prevents condensation by maintaining the temperature of the interior of the pressure shell above the dew point of cabin air. The shell heat pipes are used only for thermal conditioning and not for additional heat rejection capability.

5.9.2.2 *FGB Internal TCS*

FGB internal TCS (Figure 5-9) consists of two independent loops. The FGB internal TCS utilizes a single-phase water and ethylene glycol mixture to perform the three functions of heat collection, heat transportation, and heat rejection. ***Only one loop is in operation at a time; the second internal loop provides redundancy***. Nominal internal loop operating temperature is 15° to 35° C (59° to 95° F).

REVISIONS		
DATE	NAME	VERSION:
5-28-98	LEE WEBSTER	A

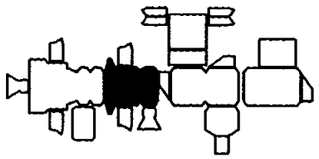

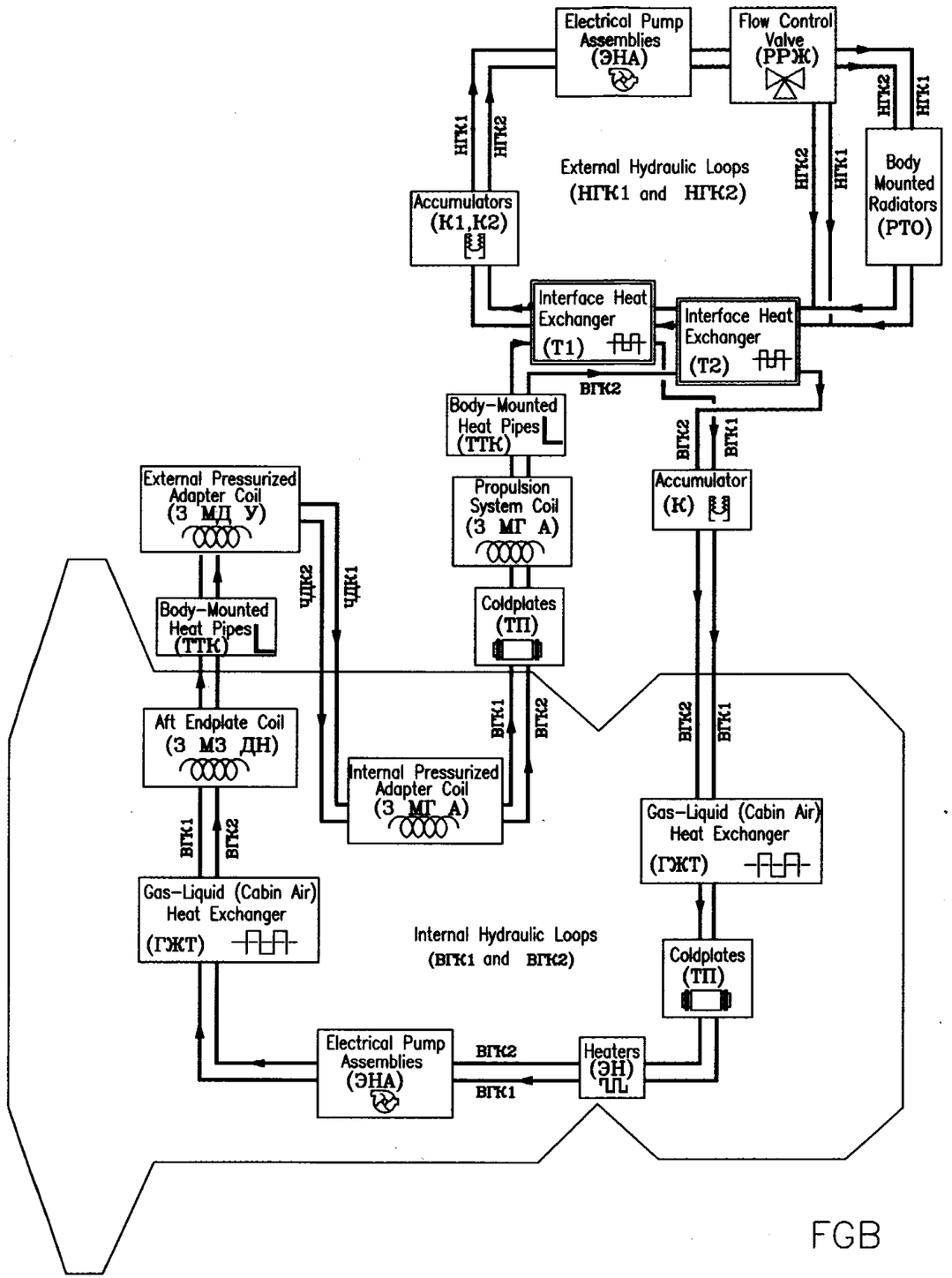

Figure 5-9 Thermal Control System level 1B Functional Cargo Block

TD9702A

SIGNATURE		DATE	NATIONAL AERONAUTICS AND SPACE ADMINISTRATION LYNDON B. JOHNSON SPACE CENTER HOUSTON, TEXAS
DSGN	LEE WEBSTER	2-3-98	
ENGR	KATHY BOLT	6-2-98	THERMAL CONTROL SYSTEM LEVEL 1B FUNCTIONAL CARGO BLOCK
ENGR			
ENGR			
APP			
ENGR			PROGRAM ISS / SIZE D / DWG NO. TCS1B-FGB-8A / REV A
APP			
	PCN		SCALE NONE / SHEET 1 OF 1

[TCS1B-FGB-8A]

In addition to fluid loops, a ventilation system is also a part of the FGB internal TCS. The ventilation system consists of fans mounted on gas-liquid (cabin air) heat exchangers, rigid and flexible distribution ducts, and portable fans. This function is analogous to the Temperature and Humidity Control (THC) System in the USOS ECLSS.

Heat Collection: The internal TCS loops acquire waste heat from coldplates and cabin air heat exchangers. Coldplates collect heat from most electronic equipment, and are similar in design and operation to the coldplates in the USOS. Air circulated through the cabin by the ventilation system picks up heat from the crew and other operating equipment. It then passes through the cabin air heat exchangers where its heat is transferred to the coolant.

Heat Transportation: Heat transportation components include pumps, an accumulator, lines, coils and valves. Each internal loop has two electrical pump assemblies, each containing two pumps. The electrical pump assemblies are replaceable on orbit and normally only one pump is active at a time. If a pump fails, software automatically starts a dormant pump. The accumulator maintains line pressure, accommodates volumetric changes in a loop caused by temperature variations, and replenishes the loop with coolant if a leak occurs. The lines include tubing, expansion joints, filters, fill and drain connections, and sensors. The internal loops are routed through coils in the aft endcone, the pressurized adapter, and propulsion units. Software-controlled heaters on the internal loops lines are used during periods of low heat loads.

Heat Rejection: The internal loop coolant transfers the heat it has collected to the external loop via an Interface Heat Exchanger (IFHX) mounted on the outside of the FGB. The IFHXs are similar in design and operation to the IFHXs in the USOS. Each internal loop flows through a separate IFHX. ***Temperature control of the internal loop is accomplished by regulating the temperature of the external loop.***

5.9.2.3 *FGB External TCS*

The FGB external TCS (Figure 5-9) consists of two independent loops. It uses a single-phase silicone fluid to perform the three functions of heat collection, heat transportation, and heat rejection. ***Only one loop is operating at a given time; the second external loop provides redundancy.***

Heat Collection: The external loops acquire heat from the IFHXs. Both external loops flow through both IFHXs.

Heat Transportation: Heat transportation components include pumps, lines, and valves. Each external loop has three pump assemblies, each containing two pumps. Only one pump is active at a time. One of the pump assemblies in each loop is replaceable on orbit. If a pump fails, software automatically starts a dormant pump. A flow control valve modulates flow through the radiators in order to maintain a temperature setpoint (loop temperature is measured after the radiator flow and bypass flow have mixed). Software maintains a temperature range of 15° to 35° C (59° to 95° F). High internal heat loads will cause the internal coolant temperature to rise. The external system responds by allowing more coolant to flow through the radiators. During periods of low heat loads, the external system allows more coolant to bypass the radiators. The accumulators maintain inlet pressure to the pumps and accommodate volumetric changes in a

loop because of temperature variations, and, if a leak occurs, the accumulators can replenish the loop with coolant.

Heat Rejection: Heat is rejected to space by body-mounted radiators (they are not deployable). There are 12 external radiator panels, each of which interfaces with both external loops. The radiators contain heat pipes which use ammonia as a working fluid. Heat is transferred from the external loops to the ammonia within the radiators and the ammonia is cooled by radiation to space.

5.9.3 Comparison of USOS and ROS TCS

Table 5-3 summarizes the differences between USOS TCS and ROS TCS.

Table 5-3. TCS comparison

USOS TCS • Habitable elements have ITCS • Shared temporary EETCS • Shared permanent ETCS	**ROS TCS** • Habitable elements have internal and external systems
USOS PTCS • MLI, coatings, and heaters	**ROS PTCS** • MLI and coatings • Shell heat pipes
USOS Lab ITCS • Working fluid is water • Two loops (MTL and LTL) • Redundancy via connecting loops • Loop temperatures independently controlled	**FGB Internal TCS** • Working fluid is water/glycol mixture • One loop (second loop is backup) • Redundancy via multiple pumps • Loop temperature determined by external system • Ventilation system (temperature and humidity control)
USOS EETCS • Two loops • Redundancy via multiple pumps • Independent IFHXs • Working fluid is ammonia • Deployable/retractable radiators • Total heat rejection capability is 14 kW	**FGB External TCS** • One loop (second loop is backup) • Redundancy via multiple pumps • Common IFHXs • Working fluid is polymethyl siloxane • Fixed, body-mounted radiators • Radiator heat pipes use two-phase ammonia • Total heat rejection capability is 3.5 kW

5.10 Flight-by-Flight Operations

TCS equipment is delivered over several flights. On the early flights, each ROS element is launched with a complete, independent TCS (passive and active systems). Components of the USOS EETCS are launched over three flights. The Lab arrives on Flight 5A with its ITCS and two IFHXs. Outfitting flights add racks and additional heat loads.

Later in the sequence, the permanent ETCS is assembled over several flights, and after Flight 11A it is activated and replaces the EETCS.

On Flight 10A, Node 2 is launched with its own ITCS and six IFHXs (two for its ITCS, and two each for the JEM and Columbus Orbiting Facility (COF)). The JEM and COF are launched later in the sequence, and the Hab is launched on Flight 16A with its ITCS and two IFHXs.

Table 5-4 summarizes the buildup of the Space Station TCS.

Table 5-4. TCS buildup

Flight	Element	TCS Components
1A/R	FGB	ROS TCS
2A	Node 1 and two PMAs	Node 1 shell heaters and dry fluid lines, PMA-1, -2 shell heaters
1R	Service Module	ROS TCS
3A	Z1 Truss	EETCS Z1 Accumulators, EETCS plumbing
2R	Soyuz	Permanent crew
4A	P6 Truss	Two radiators, two PFCSs, EETCS plumbing; checkout EETCS loops, activate EETCS loops
5A	US Lab	ITCS, two IFHXs; connect utilities, prepare IFHXs, activate ITCS
6A	MPLM	Lab outfitting (racks and other heat loads), fill Node 1 lines with water (after orbiter departure)
7A	Airlock	High-pressure gas assembly (includes nitrogen for the Nitrogen Interface Assembly (NIA)), airlock heat loads
7A.1	MPLM	Lab outfitting (racks and other heat loads)
UF-1	MPLM	Lab outfitting (racks and other heat loads)
8A	SO Truss	Parts of the permanent ETCS
UF-2	MPLM	Lab outfitting (racks and other heat loads)
9A	S1 Truss	Major components of permanent ETCS Loop A, including Pump module, radiators

Table 5-4. TCS buildup (continued)

Flight	Element	TCS Components
9A.1	SPP	ROS Central Heat Rejection System (CHRS)
11A	P1 Truss	Major components of permanent ETCS Loop B, including Pump module, radiators
12A	P3/P4 Truss	Activate permanent ETCS, deploy radiators
10A	Node 2	ITCS; six IFHXs; connect utilities, prepare IFHXs, activate Node 2 ITCS
1Ja	JEM	ITCS, connect utilities, prepare IFHXs, activate JEM ITCS
UF-3	MPLM	Lab outfitting (racks and other heat loads)
14A	Cupola	Connect utilities, cupola heat loads
1E	COF	ITCS; connect utilities, prepare IFHXs, activate COF ITCS
16A	Hab	ITCS; connect utilities, prepare IFHXs, activate HAB ITCS

5.11 TCS Summary

5.11.1 USOS PTCS Summary

The PTCS is designed to provide thermal control of USOS components via MLI blankets, surface coatings, and heaters. There are no active fluid components in PTCS devices.

5.11.2 USOS ATCS Summary

When the environment of heat loads exceeds the capabilities of the PTCS, an ATCS is required. An ATCS uses a pumped fluid to perform heat collection, heat transportation, and heat rejection. The working fluids in the USOS and ROS remain in a liquid state throughout the system.

5.11.3 Lab ITCS Summary

Water cooled by the IFHX enters the racks containing heat-generating equipment and payloads. Water passing through coldplates and heat exchangers collects the waste heat then exits the racks through the RFCAs or MFCVs. The cooling requirements of each rack are satisfied by the ability of the RFCAs to regulate flow through each rack. The water continues to the SFCA, which balances the ΔP between the supply and return lines, and on to the PPA. After passing through the PPA, the water continues back to the IFHX. The transfer of heat to the EETCS occurs in the IFHX. The TWMVs control the temperature of each loop.

Redundancy is provided by having two PPAs. If a PPA fails, the ITCS switches from dual-loop mode to single-loop mode. The LCA is part of the redundancy function since it allows the two loops to be connected.

5.11.4 USOS EETCS Summary

The EETCS provides temporary thermal control for the Lab, Node 1, MPLM, and Airlock prior to the activation of the permanent ETCS. Waste heat from the ETCS is collected at the IFHX. Circulation of the ammonia and regulation of the loop operating temperature are provided by the PFCS pumps and FCV, which are located inside the PFCS ORU. Ammonia, pumped by the PFCS through the radiator, is cooled by radiating its heat to space. The radiator has the capability to be remotely deployed and retracted.

Redundancy is provided by having two pumps in each PFCS. Both loops also flow through both radiators. Note that if an entire EETCS loop fails, the heat can still be collected from both internal loops by switching the ITCS to single-loop mode. Heat rejection would occur in the remaining IFHX.

5.11.5 USOS TCS Software Summary

TCS software is used to control and monitor the ITCS and EETCS, most of it automatically. Telemetry from sensors is monitored by TCS software and displayed on crew laptops or ground workstations. FDIR software is used to check the performance of the ITCS and EETCS and alert the crew and controllers if there is a problem.

5.11.6 ROS TCS Summary

The ROS TCS is based on the Mir space station and is functionally similar to USOS TCS. An internal TCS loop uses a coolant to collect heat generated by the crew and equipment. The warm coolant is pumped to the IFHXs where heat is transferred to the external system. The external loop circulates its operating fluid through radiators where the heat is rejected to space. There are two internal loops and two external loops for redundancy.

Questions

1. PTCS Multilayer Insulation (MLI) is analogous to
   a. An ammonia coldplate.
   b. The Interface Heat Exchanger (IFHX).
   c. A home's insulation.
2. Which of the following BEST describes surface coatings used throughout the Station?
   a. Must be resistant to atomic oxygen and radiation.
   b. Must be common throughout the Station.
   c. Must have an emissivity greater than 1.0.
3. The ITCS is responsible for
   a. Pumping ammonia coolant to the radiators.
   b. Rejecting waste heat from pressurized elements to the EETCS.
   c. Mixing the water leaving and bypassing the radiator to maintain the proper coolant temperature.
4. The ITCS provides which of the following to the IFHX?
   a. Heat collected from internal equipment.
   b. Cooled single-phase ammonia.
   c. Cooled two-phase water.
5. The EETCS provides
   a. Permanent thermal control for the Russian elements.
   b. Two-phase ammonia cooling.
   c. Temporary cooling for the Station until the ETCS is activated.
6. Which of the following statements is INCORRECT?
   a. The ETCS has larger radiators than the EETCS.
   b. The ETCS has two pumps per loop and the EETCS has one.
   c. The ETCS provides cooling to external components via coldplates.

7. The Interface Heat Exchanger (IFHX)
    d. Lies within the pressurized module.
    e. Is completely external to the module.
    f. Is part of the boundary between the inside and outside of the module.
8. The temperature of the ammonia in the EETCS loops
    a. Is not regulated.
    b. Is regulated via the rate of flow by the pump package.
    c. Is maintained by bypassing some of the ammonia around the radiators.
9. Which of the following statements <u>BEST</u> describes TCS software
    a. Resides primarily in the Tier 1 MDMs.
    b. Monitors and controls the system.
    c. Always requires crew or flight controller inputs.
10. The FGB ITCS is responsible for
    a. Pumping water/glycol to the radiators.
    b. Rejecting waste heat to the EETCS.
    c. Using both air and water/glycol to provide cooling.
11. The FGB ETCS
    a. Flows through both IFHXs.
    b. Has two loops operating simultaneously.
    c. Operates at a higher temperature than the FGB ITCS

Section 6
Environmental Control and Life Support System Overview

6.1 Introduction

The Environmental Control and Life Support System (ECLSS) maintains a pressurized habitable environment, provides water recovery and storage, and provides fire detection and suppression within the International Space Station (ISS). This segment includes an overview of ECLSS and its component subsystems. It also describes the relations between subsystems, and between ECLSS and other Station systems.

6.2 Objectives

After completing this section, you should be able to:

- Describe the major functions provided by ECLSS and each of its subsystems
- Identify major ECLSS hardware components and state their function and general functional redundancies
- Identify major ECLSS functional dependencies on the Thermal Control System, Electrical Power System, and Command and Data Handling System
- Identify major functional support provided by ECLSS for the Thermal Control System, Payloads, Crew Health Care System, and Extravehicular Activity System
- Describe major responsibilities and milestones of the United States Orbital Segment (USOS) and Russian Orbital Segment (ROS) through 8A, as well as the USOS added capabilities at Assembly Complete.

6.3 ECLSS Overview

The Environmental Control and Life Support System (ECLSS) provides a pressurized and habitable environment within the Space Station by supplying correct amounts of oxygen and nitrogen, controlling the temperature and humidity, removing carbon dioxide and other atmospheric contaminants, and monitoring the atmosphere for the presence of combustion products, and major constituent proportions. The system also collects, processes, and stores water and waste used and produced by the crewmembers, and provides fire detection, suppression, and crew safety equipment.

The general functions of the five major subsystems of USOS ECLSS at Flight 8A are shown in Figure 6-1. As illustrated, the primary ECLSS concern, whether directly or indirectly, is with the ISS atmosphere. This section of the ISS Familiarization Manual presents ECLSS through its five subsystems: Atmosphere Control and Supply, Atmosphere Revitalization, Temperature and Humidity Control, Fire Detection and Suppression, and Water Recovery and Management.

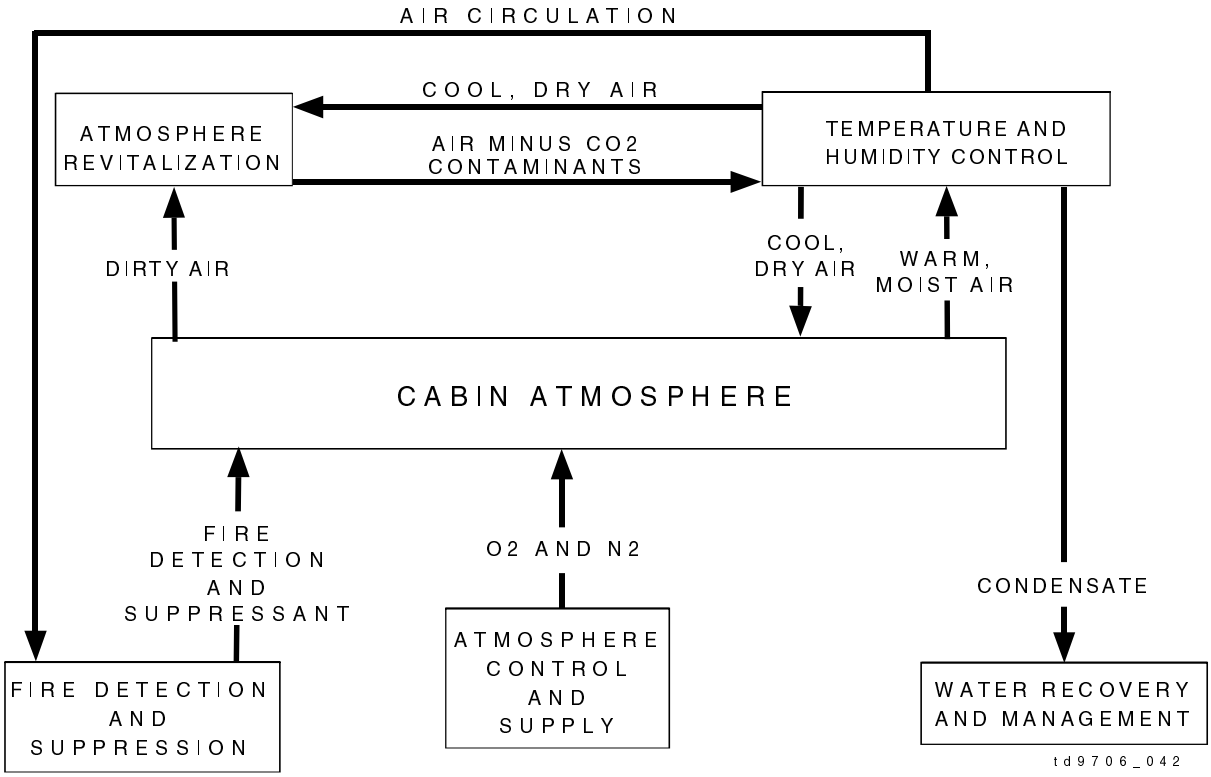

Figure 6-1. ECLSS Subsystem interfaces at Flight 8A

6.3.1 Atmosphere Control and Supply

In Figure 6-2, the USOS Atmosphere Control and Supply Subsystem and its interfaces are illustrated for a Flight 8A configuration. ***This subsystem provides oxygen and nitrogen to maintain the Space Station atmosphere at the correct pressure and composition for human habitation. The Atmosphere Control and Supply Subsystem also provides gas support to various users on the Station, as well as pressure equalization and depressurization capabilities.***

REVISIONS		
DATE	NAME	VERSION:
6-5-98	B. HAMITER	A
6-22-98	B. HAMITER	A-1

NOTE:
THIS DRAWING IS A SUB-DRAWING OF ECLS1B-USOV-8A.

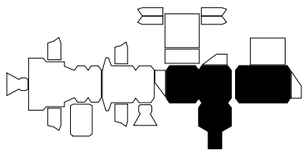

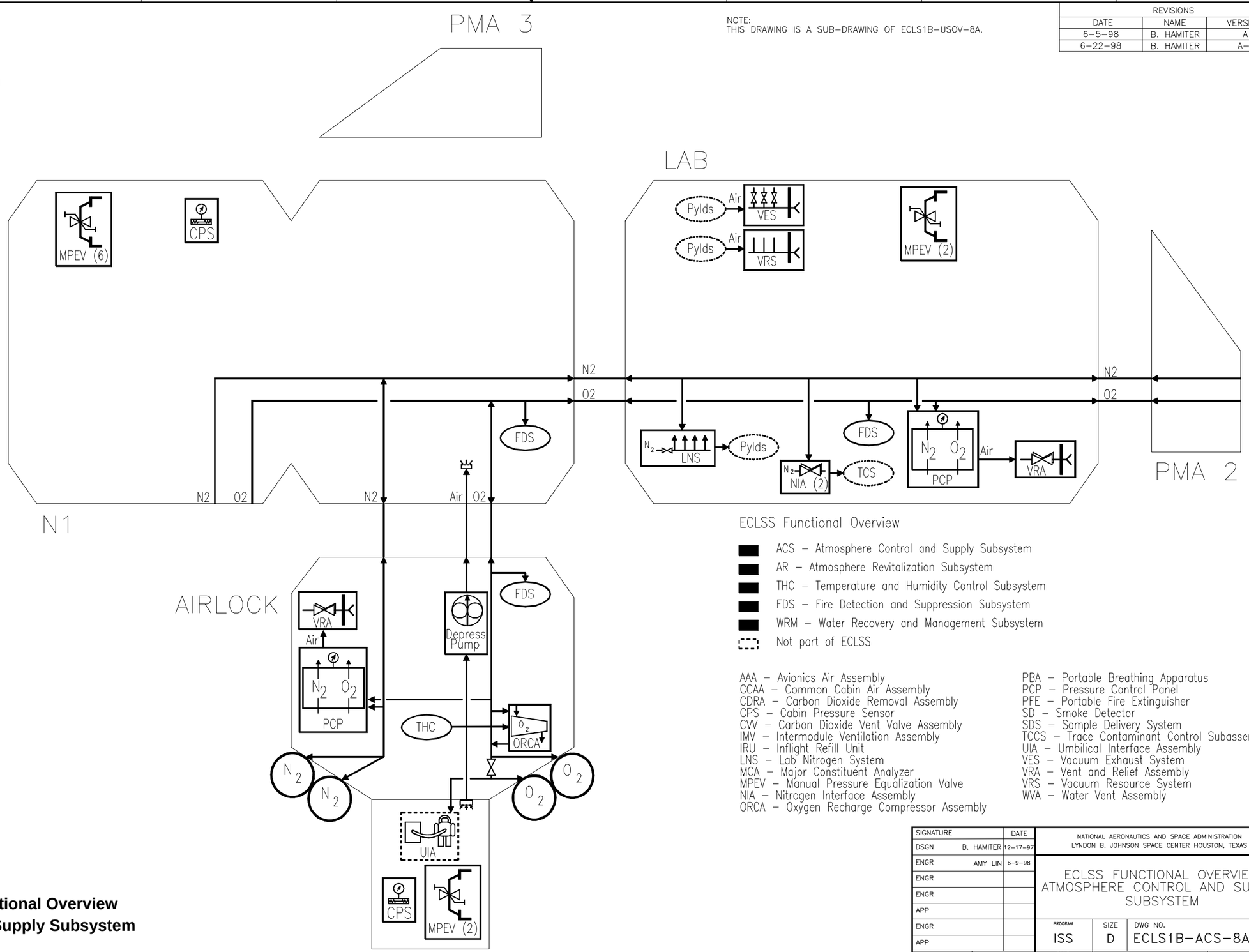

ECLSS Functional Overview

- ACS – Atmosphere Control and Supply Subsystem
- AR – Atmosphere Revitalization Subsystem
- THC – Temperature and Humidity Control Subsystem
- FDS – Fire Detection and Suppression Subsystem
- WRM – Water Recovery and Management Subsystem
- Not part of ECLSS

AAA – Avionics Air Assembly
CCAA – Common Cabin Air Assembly
CDRA – Carbon Dioxide Removal Assembly
CPS – Cabin Pressure Sensor
CVV – Carbon Dioxide Vent Valve Assembly
IMV – Intermodule Ventilation Assembly
IRU – Inflight Refill Unit
LNS – Lab Nitrogen System
MCA – Major Constituent Analyzer
MPEV – Manual Pressure Equalization Valve
NIA – Nitrogen Interface Assembly
ORCA – Oxygen Recharge Compressor Assembly
PBA – Portable Breathing Apparatus
PCP – Pressure Control Panel
PFE – Portable Fire Extinguisher
SD – Smoke Detector
SDS – Sample Delivery System
TCCS – Trace Contaminant Control Subassembly
UIA – Umbilical Interface Assembly
VES – Vacuum Exhaust System
VRA – Vent and Relief Assembly
VRS – Vacuum Resource System
WVA – Water Vent Assembly

SIGNATURE		DATE
DSGN	B. HAMITER	12-17-97
ENGR	AMY LIN	6-9-98
ENGR		
ENGR		
APP		
ENGR		
APP		
PCN		

NATIONAL AERONAUTICS AND SPACE ADMINISTRATION
LYNDON B. JOHNSON SPACE CENTER HOUSTON, TEXAS

ECLSS FUNCTIONAL OVERVIEW
ATMOSPHERE CONTROL AND SUPPLY SUBSYSTEM

PROGRAM	SIZE	DWG NO.	REV
ISS	D	ECLS1B-ACS-8A	A
SCALE NONE			SHEET 1 OF 1

[ECLS1B-ACS-8A]

Figure 6-2. ECLSS Functional Overview Atmosphere Control and Supply Subsystem

TD9702A

The Russian Orbital Segment (ROS) has primary responsibility for atmosphere control and supply functions at the Flight 8A configuration. The Progress resupply vehicle is outfitted with tanks that can be filled with either nitrogen, air, or oxygen. These tanks are manually opened by the crew if the cabin pressure is low. Oxygen for the Station is primarily supplied by an oxygen generator called the Elektron, which electrolyzes water into hydrogen and oxygen. Additional oxygen can be provided by a Solid Fuel Oxygen Generator that uses chemical cartridges to produce oxygen in an exothermic reaction.

6.3.1.1 *USOS Atmosphere Supply, Distribution, and Control*

The oxygen and nitrogen gases used by the USOS Atmosphere Control and Supply Subsystem are provided through the supply, distribution, and control portions of the subsystem. Four high-pressure gas tanks, two of nitrogen and two of oxygen, are stored on the exterior of the Airlock. The gases are distributed to the various users by a plumbed system running throughout the USOS. Another system of high-pressure plumbing allows the tanks to be recharged by the Shuttle. An oxygen compressor housed in the Airlock enables the oxygen tanks to be fully recharged because the Shuttle does not store oxygen at a high enough pressure to fully recharge the tanks. Empty tanks can also be replaced with full tanks as a second resupply option.

The Pressure Control Assembly monitors atmospheric pressures, controls the introduction of nitrogen and oxygen into the cabin atmosphere, and provides the means to depressurize Station volumes if required. The depressurization function is used in standard operations to relieve atmospheric overpressure, and in emergencies to vent hazardous contaminants overboard or as a last resort to extinguish a fire.

6.3.1.2 *User Support*

The Atmosphere Control and Supply Subsystem provides gas support to several users on the Station besides the atmosphere. Nitrogen is used to pressurize the Internal Thermal Control System accumulators and to calibrate the Crew Health Care System Volatile Organic Analyzer. The biggest users of nitrogen resources are the Payloads. A minor subsystem of ECLSS, the Vacuum System, is included here because its Payload support functions are similar to those of the Atmosphere Control and Supply Subsystem. The nitrogen provided to payload user via the vacuum system has vacuum resource and exhaust capabilities. Oxygen is provided for Extravehicular Activities (EVAs) and to the Fire Detection and Suppression Subsystem Portable Breathing Apparatus (PBA). The Airlock Depressurization Pump also supports normal EVA activities by pumping most of the Crew Lock air into Node 1 before the crew egresses.

6.3.1.3 *Pressure Equalization Between Modules*

The Atmosphere Control and Supply Subsystem also provides Manual Pressure Equalization Valves to equalize pressure between Space Station modules while the hatch is closed. A valve on each USOS hatch permits pressure equalization as modules are added to the Station, during normal EVA activities, or in the event that a module has been isolated in a contingency procedure. There are similar pressure equalization devices on the ROS hatches.

6.3.1.4 *Additional Atmosphere Control and Supply Capabilities at Assembly Complete*

At Assembly Complete, the Atmosphere Control and Supply Subsystem will have the addition of an oxygen generator on the USOS and the Sabatier on the ROS. The Sabatier conserves Station resources by producing water through reaction of hydrogen from the Elektron with carbon dioxide from the Atmosphere Revitalization Subsystem. At Assembly Complete, Atmosphere Control and Supply will also provide oxygen to the Water Recovery and Management Subsystem Potable Water Processor to assist in the purification of Station water.

6.3.2 Atmosphere Revitalization

Figure 6-3 shows the USOS Atmosphere Revitalization Subsystem and its interfaces. ***This subsystem ensures that the atmosphere provided by the Atmosphere Control and Supply Subsystem remains safe and pleasant to breathe. It performs carbon dioxide removal, trace contaminant control, and major atmospheric constituent monitoring.***

NOTE:
THIS DRAWING IS A SUB-DRAWING OF ECLS1B-USOV-8A.

REVISIONS		
DATE	NAME	VERSION:
6-5-98	B. HAMITER	A

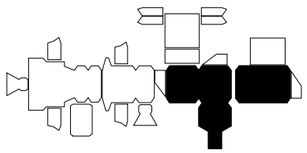

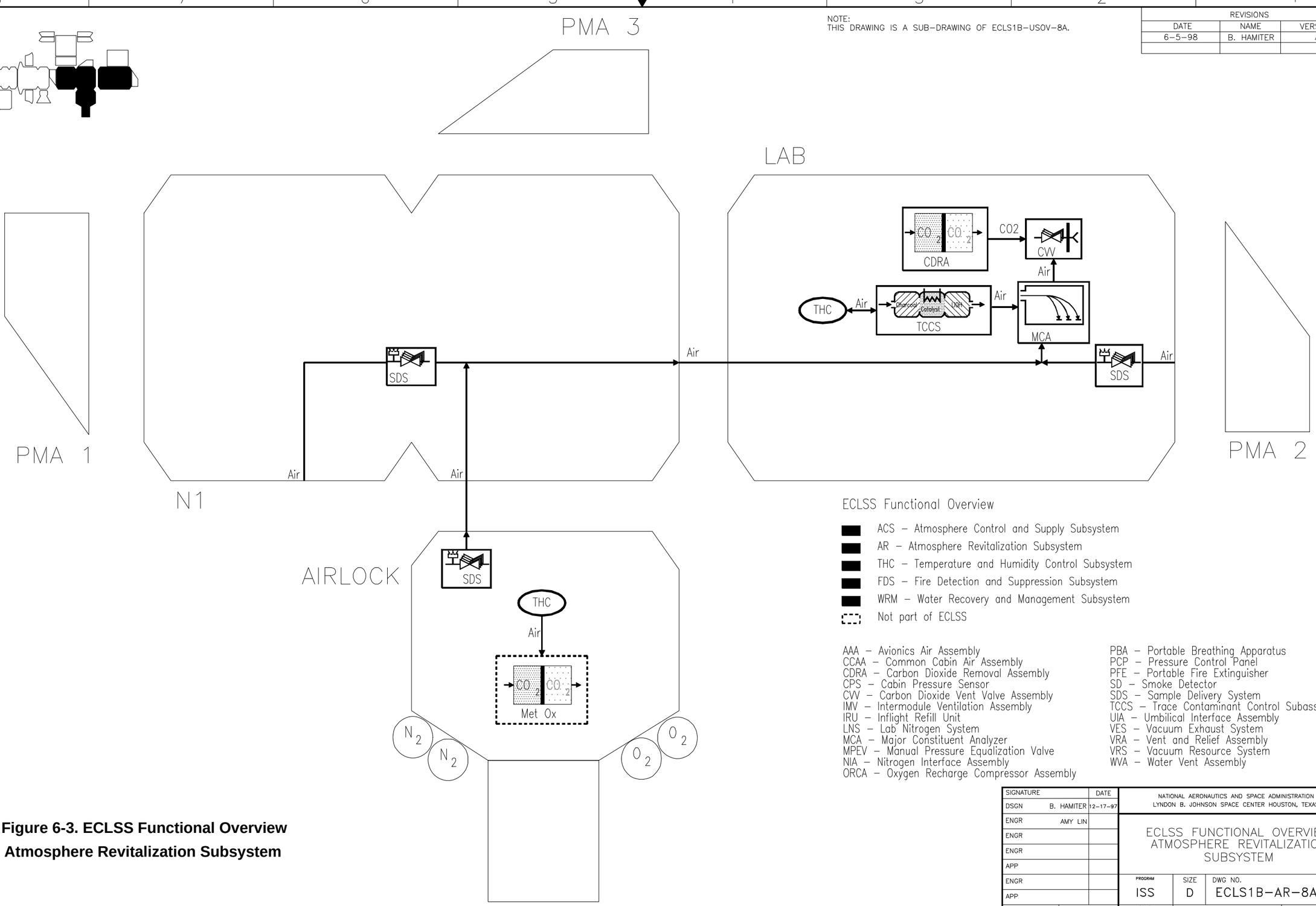

ECLSS Functional Overview

- ACS – Atmosphere Control and Supply Subsystem
- AR – Atmosphere Revitalization Subsystem
- THC – Temperature and Humidity Control Subsystem
- FDS – Fire Detection and Suppression Subsystem
- WRM – Water Recovery and Management Subsystem
- Not part of ECLSS

AAA – Avionics Air Assembly
CCAA – Common Cabin Air Assembly
CDRA – Carbon Dioxide Removal Assembly
CPS – Cabin Pressure Sensor
CVV – Carbon Dioxide Vent Valve Assembly
IMV – Intermodule Ventilation Assembly
IRU – Inflight Refill Unit
LNS – Lab Nitrogen System
MCA – Major Constituent Analyzer
MPEV – Manual Pressure Equalization Valve
NIA – Nitrogen Interface Assembly
ORCA – Oxygen Recharge Compressor Assembly
PBA – Portable Breathing Apparatus
PCP – Pressure Control Panel
PFE – Portable Fire Extinguisher
SD – Smoke Detector
SDS – Sample Delivery System
TCCS – Trace Contaminant Control Subassembly
UIA – Umbilical Interface Assembly
VES – Vacuum Exhaust System
VRA – Vent and Relief Assembly
VRS – Vacuum Resource System
WVA – Water Vent Assembly

Figure 6-3. ECLSS Functional Overview
Atmosphere Revitalization Subsystem

SIGNATURE		DATE
DSGN	B. HAMITER	12-17-97
ENGR	AMY LIN	
ENGR		
ENGR		
APP		
ENGR		
APP		
	PCN	

NATIONAL AERONAUTICS AND SPACE ADMINISTRATION
LYNDON B. JOHNSON SPACE CENTER HOUSTON, TEXAS

ECLSS FUNCTIONAL OVERVIEW
ATMOSPHERE REVITALIZATION
SUBSYSTEM

PROGRAM	SIZE	DWG NO.	REV
ISS	D	ECLS1B-AR-8A	A
SCALE NONE			SHEET 1 OF 1

[ECLS1B-AR-8A]

TD9702A

6.3.2.1 *Major Constituent Monitoring*

The Major Constituent Analyzer monitors the composition of the Station atmosphere by mass spectrometry. Measurements are used to control the addition of oxygen and indirectly, nitrogen, into the Station atmosphere by the Atmosphere Control and Supply Subsystem, and to monitor the performance of the assembly that removes carbon dioxide. In the ROS, the Gas Analyzers use several different gas detection methods to provide similar functions. Air is delivered to the Major Constituent Analyzer by a network of pipes, valves, and sample ports running throughout the USOS. This network is the Sample Delivery System.

6.3.2.2 *Carbon Dioxide Removal*

The Carbon Dioxide Removal Assembly (CDRA) collects carbon dioxide from the cabin atmosphere with a series of regenerable sorbent beds and expels the unwanted gases to space. To remove carbon dioxide effectively, the CDRA requires cold, dry air, so it receives air from the Temperature and Humidity Control Subsystem and interfaces directly with the Internal Thermal Control System Low Temperature Loop. On the ROS, the Vozdukh performs the same function as the CDRA. Lithium hydroxide-based canisters are available for backup ROS functionality.

6.3.2.3 *Trace Contaminant Control*

The Trace Contaminant Control Subassembly filters and catalyzes numerous gaseous contaminants and odors from the cabin atmosphere. These contaminants are caused by material off-gassing, leaks, spills, or other events. On the ROS, the Trace Contaminant Control Unit operates similarly to the Trace Contaminant Control Subassembly. The Harmful Impurities Filter provides backup contaminant control as needed.

6.3.2.4 *Additional Atmosphere Revitalization Capabilities at Assembly Complete*

At Assembly Complete, the USOS adds duplicates of each of the Major Constituent Analyzer, Carbon Dioxide Removal Assembly (CDRA), and Trace Contaminant Control Subassembly. These duplicates will serve as backup only, because each device operates at a three-person rate. The ROS has similar capabilities which will be used in conjunction with the USOS equipment, and together they will be sufficient to support a six-member crew.

6.3.3 Temperature and Humidity Control

Figure 6-4 shows the USOS Temperature and Humidity Control Subsystem and its interfaces. ***This Subsystem helps maintain a habitable environment within the Station atmosphere by circulating cool dry air, removing humidity and particulates, and maintaining the temperature.*** Circulation of the atmosphere minimizes temperature variations, ensures homogeneous atmospheric composition, and provides a means for smoke detection. Three levels of circulation are provided: rack, intramodule, and intermodule ventilation. Rack ventilation cools and circulates air within an individual rack. Intramodule ventilation provides circulation to ensure a consistent atmosphere within a single module, and may support cooling and humidity removal. Finally, intermodule ventilation circulates air between modules to ensure a

homogeneous atmosphere throughout the Station. While the ROS equivalent of Temperature and Humidity Control equipment is considered a part of the ROS Thermal Control System, it is functionally very similar to the USOS equipment.

REVISIONS		
DATE	NAME	VERSION:
6-5-98	B. HAMITER	A
6-22-98	B. HAMITER	A-1

NOTE:
THIS DRAWING IS A SUB-DRAWING OF ECLS1B-USOV-8A.

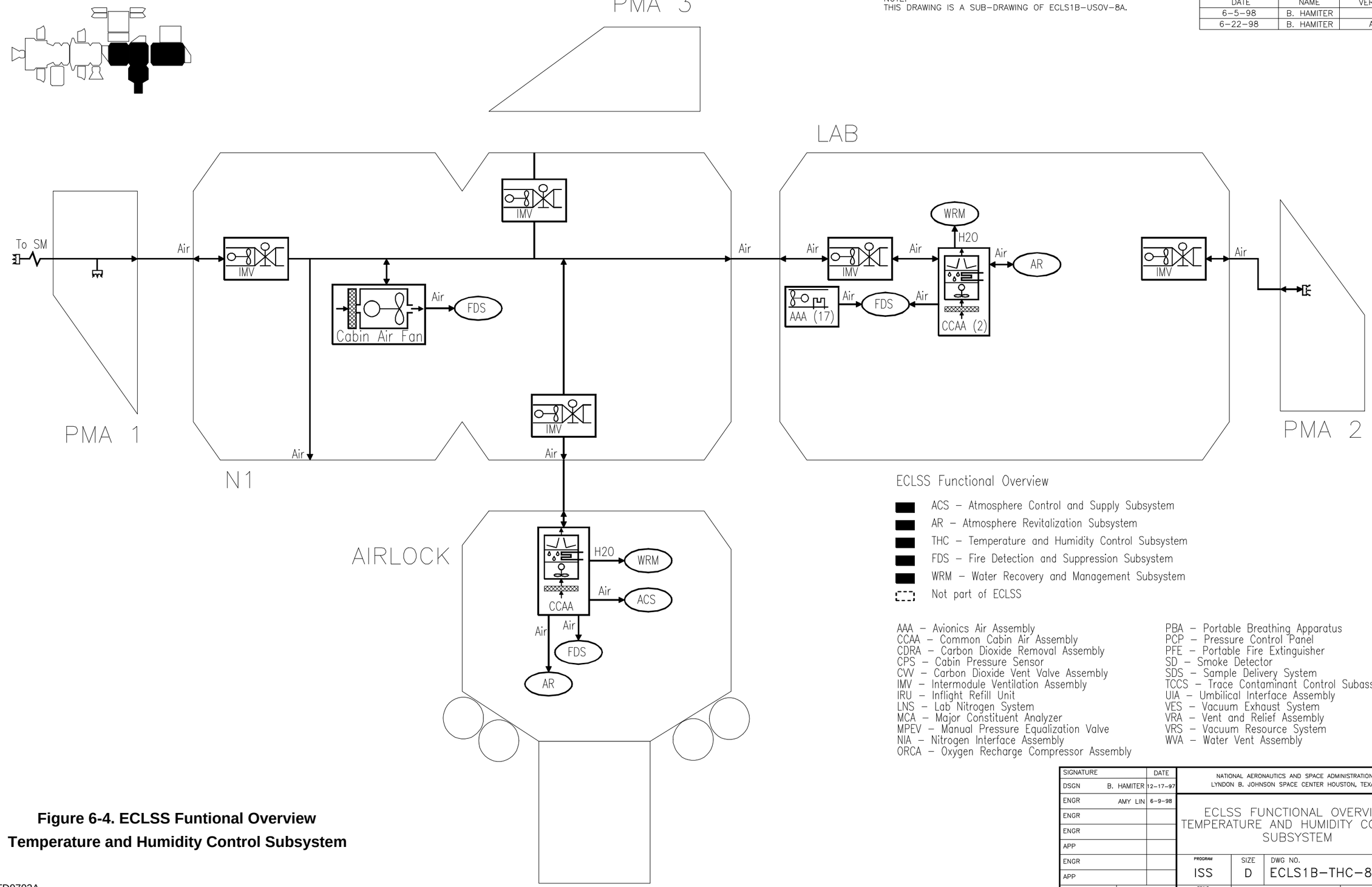

ECLSS Functional Overview

- ACS – Atmosphere Control and Supply Subsystem
- AR – Atmosphere Revitalization Subsystem
- THC – Temperature and Humidity Control Subsystem
- FDS – Fire Detection and Suppression Subsystem
- WRM – Water Recovery and Management Subsystem
- Not part of ECLSS

AAA – Avionics Air Assembly
CCAA – Common Cabin Air Assembly
CDRA – Carbon Dioxide Removal Assembly
CPS – Cabin Pressure Sensor
CVV – Carbon Dioxide Vent Valve Assembly
IMV – Intermodule Ventilation Assembly
IRU – Inflight Refill Unit
LNS – Lab Nitrogen System
MCA – Major Constituent Analyzer
MPEV – Manual Pressure Equalization Valve
NIA – Nitrogen Interface Assembly
ORCA – Oxygen Recharge Compressor Assembly
PBA – Portable Breathing Apparatus
PCP – Pressure Control Panel
PFE – Portable Fire Extinguisher
SD – Smoke Detector
SDS – Sample Delivery System
TCCS – Trace Contaminant Control Subassembly
UIA – Umbilical Interface Assembly
VES – Vacuum Exhaust System
VRA – Vent and Relief Assembly
VRS – Vacuum Resource System
WVA – Water Vent Assembly

Figure 6-4. ECLSS Funtional Overview
Temperature and Humidity Control Subsystem

SIGNATURE		DATE
DSGN	B. HAMITER	12-17-97
ENGR	AMY LIN	6-9-98
ENGR		
ENGR		
APP		
ENGR		
APP		
PCN		

NATIONAL AERONAUTICS AND SPACE ADMINISTRATION
LYNDON B. JOHNSON SPACE CENTER HOUSTON, TEXAS

ECLSS FUNCTIONAL OVERVIEW
TEMPERATURE AND HUMIDITY CONTROL SUBSYSTEM

PROGRAM	SIZE	DWG NO.	REV
ISS	D	ECLS1B-THC-8A	A
SCALE NONE		SHEET 1 OF 1	

TD9702A

[ECLS1B-THC-8A]

6.3.3.1 *Rack Ventilation*

The Avionics Air Assembly is used to cool and circulate air within a specific rack volume. A fan and non-condensing heat exchanger provide cooling for rack equipment and circulation for operation of the Fire Detection and Suppression Subsystem Smoke Detectors. This heat exchanger interfaces with the Internal Thermal Control System Moderate Temperature Loop.

6.3.3.2 *Intramodule Ventilation*

The Common Cabin Air Assembly (CCAA) contains a fan and condensing heat exchanger to provide intramodule ventilation, temperature control, and humidity removal. Before the air enters the CCAA, it is drawn through the High Efficiency Particulate Air (HEPA) filters which remove particles and bacteria from the airstream. Moisture in the Station atmosphere is condensed by the heat exchanger and is sent to the Water Recovery and Management Subsystem. The heat exchanger interfaces with the Internal Thermal Control System Low Temperature Loop. Air that has been cooled and dehumidified is sent to the Atmosphere Revitalization Subsystem Carbon Dioxide Removal Assembly (CDRA) for its effective operation There are two CCAAs in the U.S. Lab, of which only one is normally in operation at Flight 8A. There is also a CCAA in the Airlock which is only used during EVA operations. The Cabin Air Fan in Node 1 provides intramodule circulation but has no cooling or humidity removal capability.

6.3.3.3 *Intermodule Ventilation*

The Intermodule Ventilation (IMV) Assembly is a series of fans and valves that circulate air between modules through a ducting system. Hard plumbed ducts are located in most endcones on the USOS, and the hatches themselves can also act as circulation paths. The ROS relies on drag-through flexible ducting and open hatches for intermodule ventilation.

6.3.3.4 *Additional Temperature and Humidity Control Capabilities at Assembly Complete*

At Assembly Complete, additional Common Cabin Air Assemblies (CCAAs) will be available and Intermodule Ventilation (IMV) equipment will be included in all new modules. Additional Avionics Air Assemblies will be manifested as required to support rack equipment.

6.3.4 Fire Detection and Suppression

Figure 6-5 shows the USOS Fire Detection and Suppression Subsystem and its interfaces. ***The Fire Detection and Suppression Subsystem provides smoke detectors for the Station volumes, fire extinguishers, portable breathing equipment, and a system of alarms and automatic software responses for a fire event.*** Following a fire, the Atmosphere Revitalization and Temperature and Humidity Control Subsystems work together to remove contaminants from the affected volume. In an extreme situation, the Atmosphere Control and Supply equipment may be used to depressurize a module to extinguish the fire and/or exhaust the contaminants.

NOTE:
THIS DRAWING IS A SUB-DRAWING OF ECLS1B-USOV-8A.

REVISIONS		
DATE	NAME	VERSION:
6-5-98	B. HAMITER	A
6-22-98	B. HAMITER	A-1

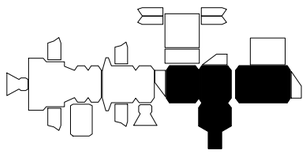

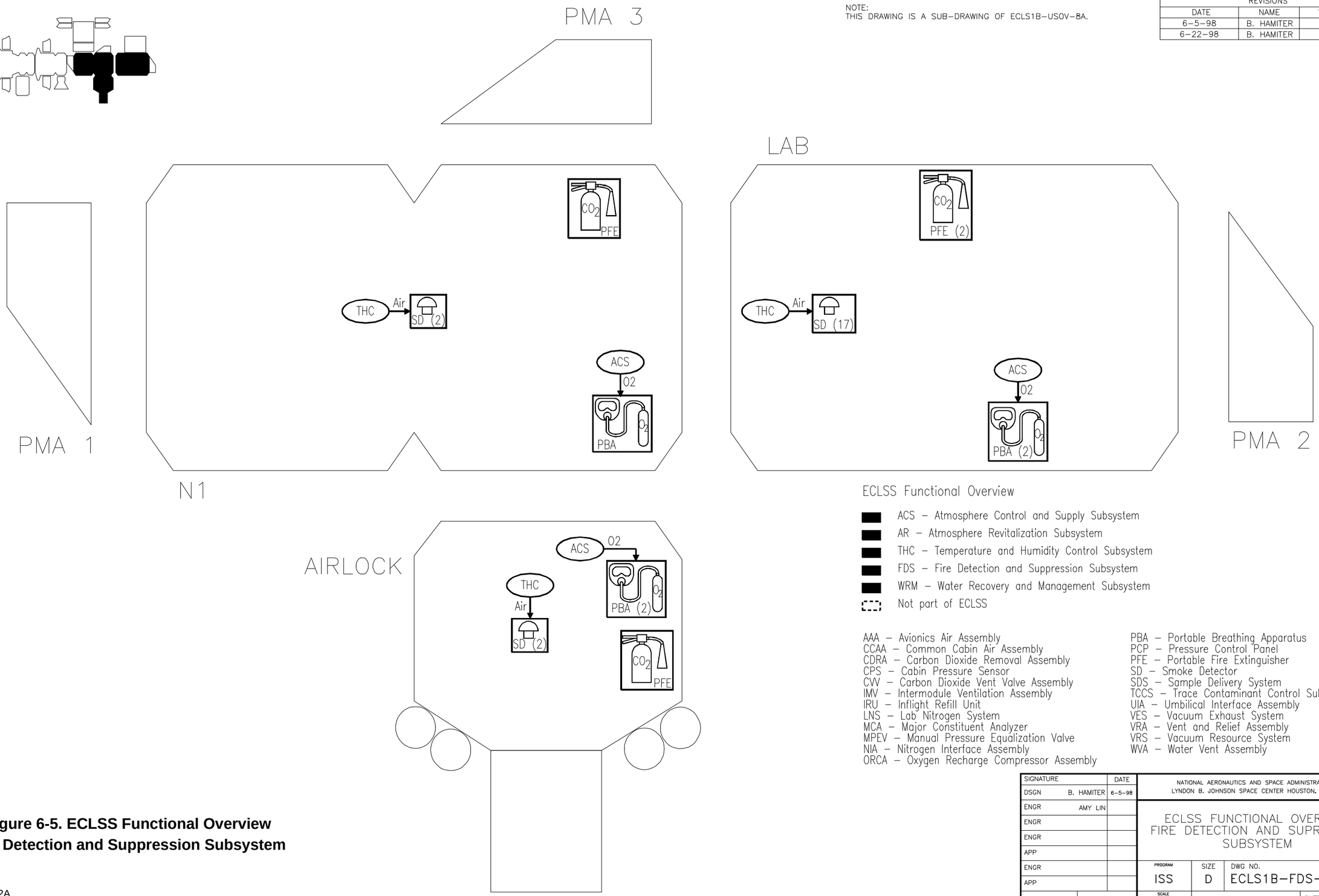

ECLSS Functional Overview

- ACS – Atmosphere Control and Supply Subsystem
- AR – Atmosphere Revitalization Subsystem
- THC – Temperature and Humidity Control Subsystem
- FDS – Fire Detection and Suppression Subsystem
- WRM – Water Recovery and Management Subsystem
- Not part of ECLSS

AAA – Avionics Air Assembly
CCAA – Common Cabin Air Assembly
CDRA – Carbon Dioxide Removal Assembly
CPS – Cabin Pressure Sensor
CVV – Carbon Dioxide Vent Valve Assembly
IMV – Intermodule Ventilation Assembly
IRU – Inflight Refill Unit
LNS – Lab Nitrogen System
MCA – Major Constituent Analyzer
MPEV – Manual Pressure Equalization Valve
NIA – Nitrogen Interface Assembly
ORCA – Oxygen Recharge Compressor Assembly
PBA – Portable Breathing Apparatus
PCP – Pressure Control Panel
PFE – Portable Fire Extinguisher
SD – Smoke Detector
SDS – Sample Delivery System
TCCS – Trace Contaminant Control Subassembly
UIA – Umbilical Interface Assembly
VES – Vacuum Exhaust System
VRA – Vent and Relief Assembly
VRS – Vacuum Resource System
WVA – Water Vent Assembly

Figure 6-5. ECLSS Functional Overview
Fire Detection and Suppression Subsystem

SIGNATURE		DATE
DSGN	B. HAMITER	6-5-98
ENGR	AMY LIN	
ENGR		
ENGR		
APP		
ENGR		
APP		
	PCN	

NATIONAL AERONAUTICS AND SPACE ADMINISTRATION
LYNDON B. JOHNSON SPACE CENTER HOUSTON, TEXAS

ECLSS FUNCTIONAL OVERVIEW
FIRE DETECTION AND SUPRESSION SUBSYSTEM

PROGRAM	SIZE	DWG NO.	REV
ISS	D	ECLS1B-FDS-8A	A
SCALE NONE			SHEET 1 OF 1

[ECLS1B-FDS-8A]

TD9702A

6.3.4.1 *Smoke Detection*

In the USOS, the Fire Detection and Suppression Subsystem provides two area Smoke Detectors in each pressurized module, and a Smoke Detector in each rack requiring an Avionics Air Assembly. These Smoke Detectors operate on a light obscuration principle, and are mounted in Temperature and Humidity Control Subsystem air paths. The ROS has two types of Smoke Detectors. One type is similar to USOS Smoke Detectors, and the other is an ionization type.

6.3.4.2 *Fire Indication*

A Caution and Warning (C&W) Panel mounted in each USOS module features lighted emergency buttons. If smoke is detected, flight software will light the "FIRE" button, sound an alarm, and shut off Temperature and Humidity Control equipment in the area to minimize oxygen being fed to the fire. Crewmembers may also sound (or silence) a fire alarm by manually pushing the button on the C&W Panel or on the Portable Computer System (PCS).

6.3.4.3 *Fire Extinguishing*

Fires on the USOS can be extinguished with handheld Portable Fire Extinguishers, which are filled with carbon dioxide. These function very similarly to typical fire extinguishers here on Earth. Two different nozzles allow the Portable Fire Extinguisher to be used on both open area and rack fires. The ROS uses fire extinguishers filled with a non-toxic nitrogen based substance that can be dispensed as a foam or a liquid.

6.3.4.4 *Supplemental Oxygen Supply*

During a fire, crewmembers must wear a Portable Breathing Apparatus (PBA), which is essentially a gas mask and an oxygen bottle. The PBA can also be plugged into oxygen ports provided by the Atmosphere Control and Supply Subsystem. The PBA is particularly important for a crewmember using the Portable Fire Extinguisher, because carbon dioxide displaces oxygen in the vicinity. This high concentration of carbon dioxide could cause the crewmember to lose consciousness if he or she is not supplied direct oxygen through a PBA.

6.3.4.5 *Additional Fire Detection and Suppression Capabilities at Assembly Complete*

There are no functional differences between 8A and Assembly Complete; there will simply be more equipment available.

6.3.5 Water Recovery and Management

In Figure 6-6, the USOS Water Recovery and Management Subsystem and its interfaces are illustrated for a Flight 8A configuration. ***This subsystem collects, stores, and distributes the Station's water resources.*** The water collected includes condensate from the Temperature and Humidity Control Subsystem and return water from EVA activities. ***At 8A, collected water is transported to the ROS for processing or is vented overboard.***

NOTE:
THIS DRAWING IS A SUB-DRAWING OF ECLS1B-USOV-8A.

REVISIONS		
DATE	NAME	VERSION:
6-5-98	B. HAMITER	A
6-22-98	B. HAMITER	A-1

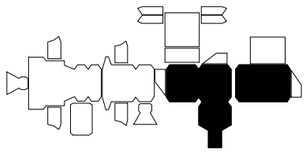

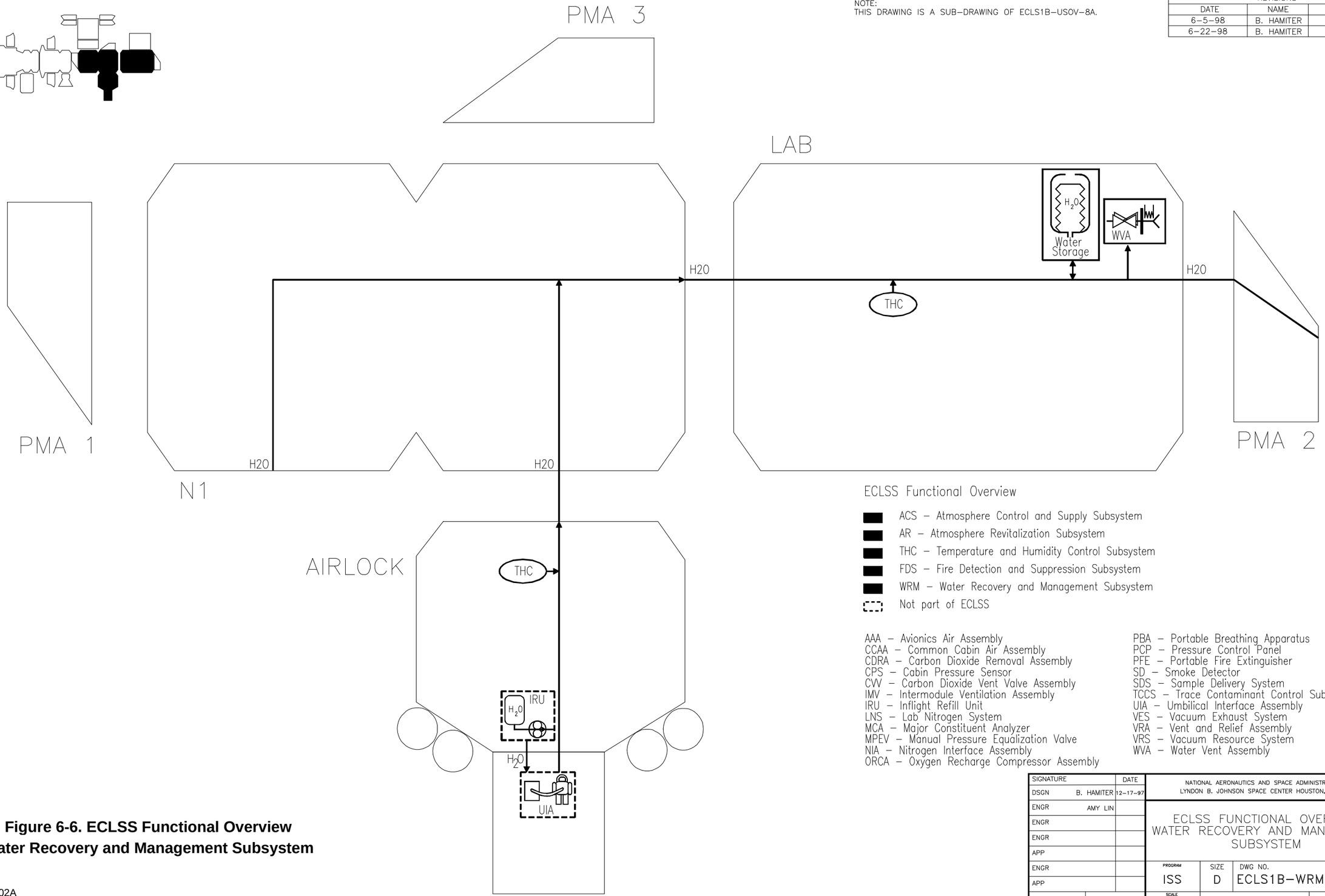

ECLSS Functional Overview

- ACS – Atmosphere Control and Supply Subsystem
- AR – Atmosphere Revitalization Subsystem
- THC – Temperature and Humidity Control Subsystem
- FDS – Fire Detection and Suppression Subsystem
- WRM – Water Recovery and Management Subsystem
- Not part of ECLSS

AAA – Avionics Air Assembly
CCAA – Common Cabin Air Assembly
CDRA – Carbon Dioxide Removal Assembly
CPS – Cabin Pressure Sensor
CVV – Carbon Dioxide Vent Valve Assembly
IMV – Intermodule Ventilation Assembly
IRU – Inflight Refill Unit
LNS – Lab Nitrogen System
MCA – Major Constituent Analyzer
MPEV – Manual Pressure Equalization Valve
NIA – Nitrogen Interface Assembly
ORCA – Oxygen Recharge Compressor Assembly
PBA – Portable Breathing Apparatus
PCP – Pressure Control Panel
PFE – Portable Fire Extinguisher
SD – Smoke Detector
SDS – Sample Delivery System
TCCS – Trace Contaminant Control Subassembly
UIA – Umbilical Interface Assembly
VES – Vacuum Exhaust System
VRA – Vent and Relief Assembly
VRS – Vacuum Resource System
WVA – Water Vent Assembly

SIGNATURE		DATE
DSGN	B. HAMITER	12-17-97
ENGR	AMY LIN	
ENGR		
ENGR		
APP		
ENGR		
APP		
	PCN	

NATIONAL AERONAUTICS AND SPACE ADMINISTRATION
LYNDON B. JOHNSON SPACE CENTER HOUSTON, TEXAS

ECLSS FUNCTIONAL OVERVIEW
WATER RECOVERY AND MANAGEMENT SUBSYSTEM

PROGRAM	SIZE	DWG NO.	REV
ISS	D	ECLS1B-WRM-8A	A
SCALE NONE			SHEET 1 OF 1

[ECLS1B-WRM-8A]

Figure 6-6. ECLSS Functional Overview
Water Recovery and Management Subsystem

TD9702A

6.3.5.1 *ROS Water Recovery and Management Overview*

The ROS has primary responsibility for water recovery and management functions for most of the assembly stages of the Station. The ROS collects condensate water from its condensing heat exchangers and receives water that is manually transported from the USOS. It is then purified and monitored for quality. If water is needed in the Elektron oxygen generator, potable water must be repurified to remove minerals. Small tanks are used to store and transport water in various locations on the ROS. Larger tanks with a pump assembly, called Rodniks, store potable water both on the exterior of the Service Module and on Progress modules. Solid waste products from various sources are collected and put on a Progress module for incineration upon atmosphere re-entry.

6.3.5.2 *USOS Water Recovery and Management*

At Flight 8A, the USOS collects condensate water from the Temperature and Humidity Control Subsystem and waste water from the Extravehicular Mobility Units (space suits). Waste water lines transport the water throughout the USOS, and the water is stored in a tank until it is removed from the system by overboard venting or manual transport to the ROS.

6.3.5.3 *Additional Water Recovery and Management Capabilities at Assembly Complete*

At Assembly Complete, the USOS Water Recovery and Management Subsystem has several more capabilities. A network of pipes and another tank will be used to transport and store water produced by the Shuttle's fuel cells for use as make-up water on the ISS. A Urine Processor will separate water from urine and refine it to waste water. A Potable Water Processor will then refine waste water (including condensate, fuel cell water, EVA waste water, and Urine Processor output water) into potable water.

6.4 ECLSS Interfaces

In Figure 6-7, the interfaces that ECLSS shares with other ISS systems at Flight 8A are illustrated. At Assembly Complete, the USOS will also provide potable water to Crew Systems and to EVA Systems.

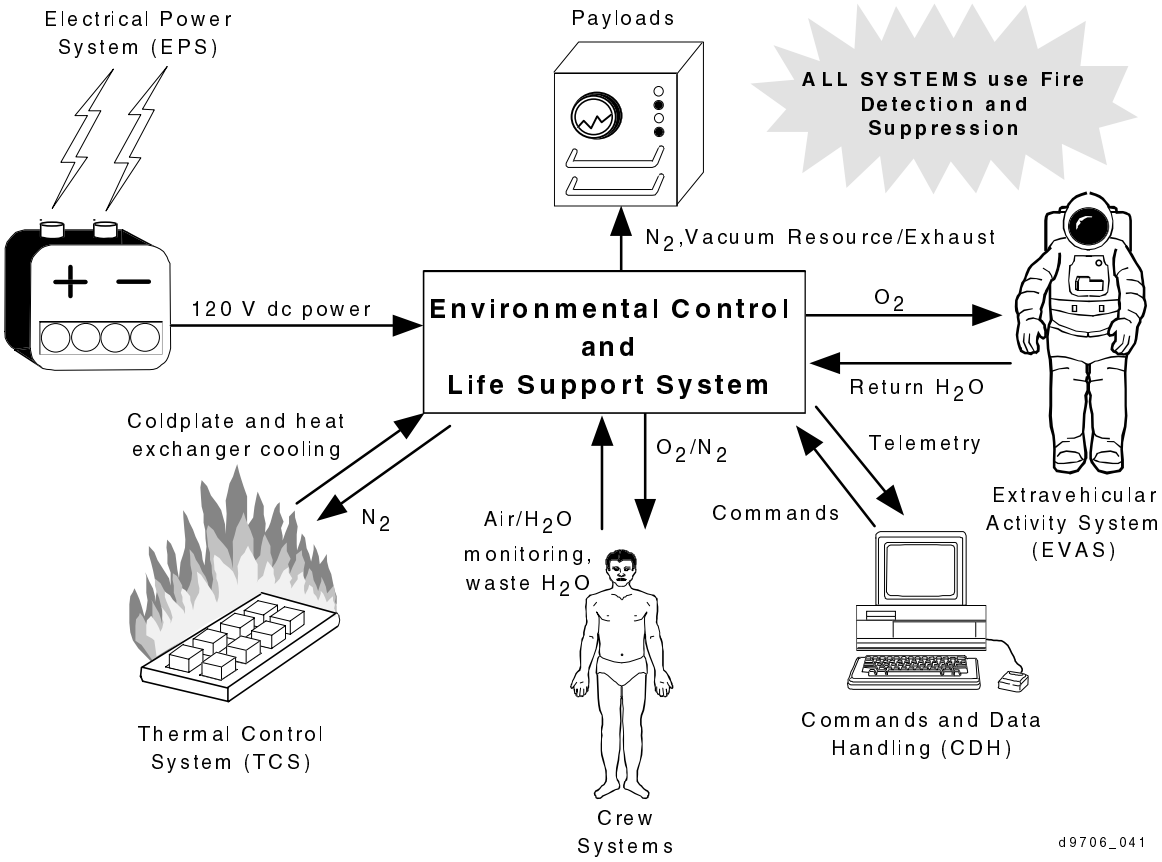

Figure 6-7. ECLSS interfaces at Flight 8A

6.5 ECLSS Milestones

There are several important milestones in the buildup of ISS ECLSS. Because ECLSS is primarily concerned with the maintenance of living conditions, these milestones correspond to the arrival of pressurized modules.

6.5.1 Flight 1A/R - Functional Cargo Block

The Functional Cargo Block (FGB) is the foundation module of the ISS. It contains the first few pieces of ECLSS equipment, including circulation fans and non-condensing atmospheric heat exchangers, fire detection and suppression equipment, and a Gas Analyzer.

6.5.2 Flight 2A - Node 1

At Flight 2A, Node 1 and two Pressurized Mating Adapters (PMAs) are delivered to the Station. Node 1 contains a Cabin Air Fan, Intermodule Ventilation equipment, a Cabin Pressure Sensor, Fire Detection and Suppression equipment, and Manual Pressure Equalization Valves on each hatch.

6.5.3 Flight 1R - Service Module

Most of the Russian ECLSS equipment on the Station at Flight 8A is housed in the Service Module. This includes the Elektron for oxygen generation, Vozdukh and lithium hydroxide-based canisters for carbon dioxide removal, a Trace Contaminant Control Unit and Harmful Impurities Filter for contaminant removal, Gas Analyzers for major constituent monitoring, fire detection and suppression equipment, air cooling and humidity removal equipment, urinal and commode facilities, and a condensate water processor. ***The arrival of the Service Module marks the beginning of the three-person permanent presence capability.***

6.5.4 Flight 5A - Lab

Much of the USOS ECLSS equipment available during most of the assembly stages arrives with the Lab. Atmosphere Control and Supply equipment includes gas lines, Pressure Control Assembly, and Manual Pressure Equalization Valves. A complete rack of Atmosphere Revitalization equipment arrives, which contains the Major Constituent Analyzer, Carbon Dioxide Removal Assembly, and Trace Contaminant Control Subassembly. The Sample Delivery System lines launched in the Lab and Node 1 are connected to the Major Constituent Analyzer. Temperature and Humidity Control equipment includes two Common Cabin Air Assemblies and more Intermodule Ventilation equipment, as well as Avionics Air Assemblies in several racks. Fire Detection and Suppression equipment is launched with the Lab, as are the Water Recovery and Management condensate tank, Water Vent Assembly, and waste and (unused) fuel cell water lines.

6.5.5 Flight 7A - Airlock

At Flight 7A, the Airlock is installed, along with much of the Atmosphere Control and Supply storage and distribution equipment, more Manual Pressure Equalization Valves, and another Pressure Control Assembly. Another Common Cabin Air Assembly and more Intermodule Ventilation equipment arrive, and Sample Delivery System lines are connected to the USOS network. The standard Fire Detection and Suppression equipment is manifested, as is the Depressurization Pump. ***This flight marks the last major USOS ECLSS build-up until the arrival of Node 2.***

6.6 Summary

6.6.1 ECLSS Purpose and Functions

The Environmental Control and Life Support System (ECLSS) maintains a pressurized habitable environment, provides water recovery and storage, and provides fire detection and suppression within the ISS.

6.6.2 Subsystem Names and Functions

There are five major subsystems within ECLSS:

- The Atmosphere Control and Supply Subsystem provides oxygen and nitrogen to maintain the Station atmosphere at the correct pressure and composition for human habitation. It also provides gas support to various users on the Station, and pressure equalization and depressurization capabilities
- The Atmosphere Revitalization Subsystem ensures that the atmosphere provided by the Atmosphere Control and Supply Subsystem remains safe and pleasant to breathe. It performs carbon dioxide removal, trace contaminant control, and major atmospheric constituent monitoring
- The Temperature and Humidity Control Subsystem helps maintain a habitable environment by circulating air, removing humidity and particulates, and maintaining the temperature of the Station atmosphere. Three levels of circulation are provided: rack, intramodule, and intermodule ventilation
- The Fire Detection and Suppression Subsystem provides smoke detection sensors for the Station volumes, fire extinguishers, portable breathing equipment, and a system of alarms and automatic software actions to annunciate and automatically respond to a fire event
- The Water Recovery and Management Subsystem collects, stores, and distributes the Station's water resources.

Figure 6-8 shows how all the components of the subsystems interact with each other.

REVISIONS		
DATE	NAME	VERSION:
6-11-98	B. HAMITER	A-1
6-22-98	B. HAMITER	A-2

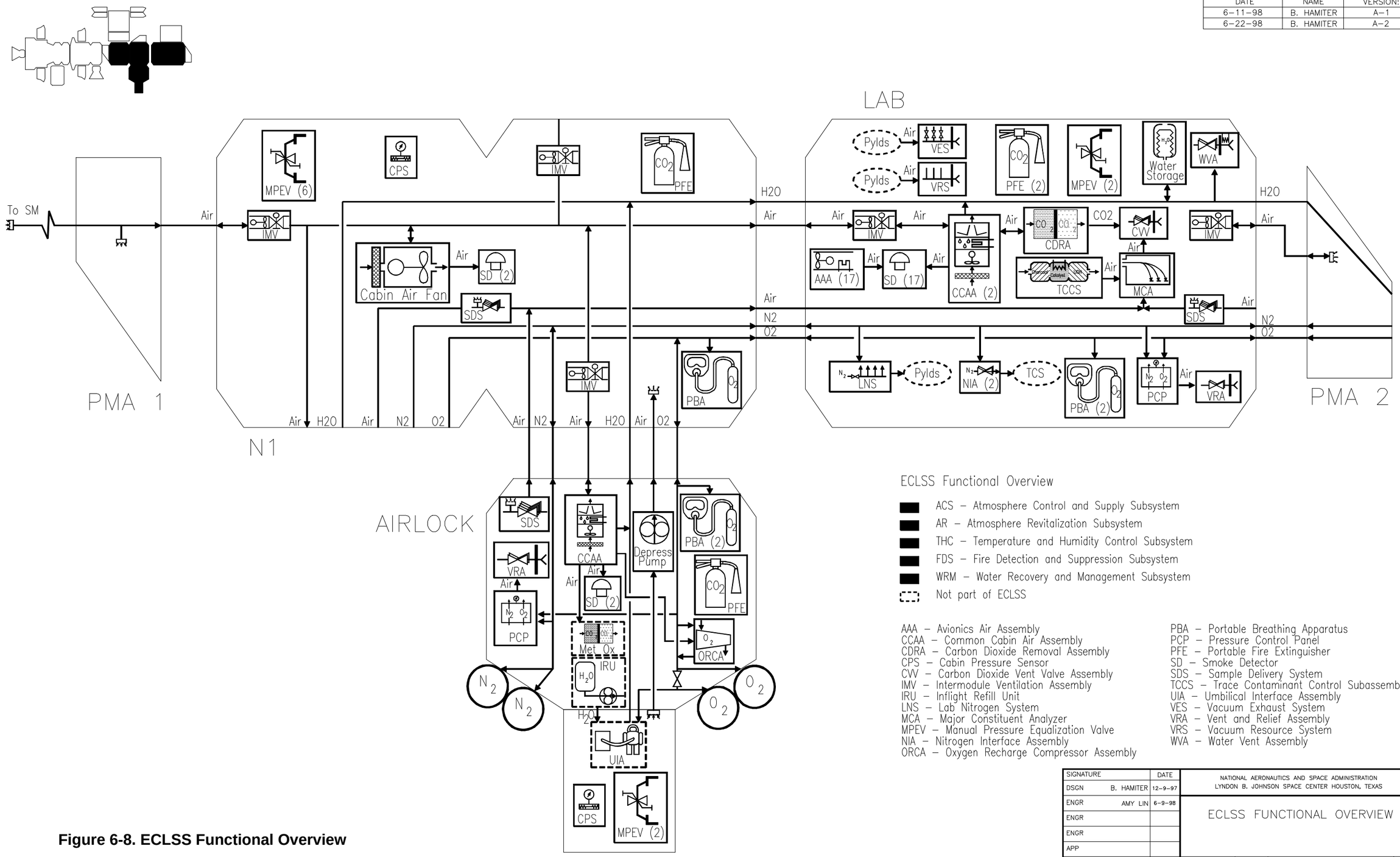

ECLSS Functional Overview

- ACS – Atmosphere Control and Supply Subsystem
- AR – Atmosphere Revitalization Subsystem
- THC – Temperature and Humidity Control Subsystem
- FDS – Fire Detection and Suppression Subsystem
- WRM – Water Recovery and Management Subsystem
- Not part of ECLSS

AAA – Avionics Air Assembly
CCAA – Common Cabin Air Assembly
CDRA – Carbon Dioxide Removal Assembly
CPS – Cabin Pressure Sensor
CVV – Carbon Dioxide Vent Valve Assembly
IMV – Intermodule Ventilation Assembly
IRU – Inflight Refill Unit
LNS – Lab Nitrogen System
MCA – Major Constituent Analyzer
MPEV – Manual Pressure Equalization Valve
NIA – Nitrogen Interface Assembly
ORCA – Oxygen Recharge Compressor Assembly
PBA – Portable Breathing Apparatus
PCP – Pressure Control Panel
PFE – Portable Fire Extinguisher
SD – Smoke Detector
SDS – Sample Delivery System
TCCS – Trace Contaminant Control Subassembly
UIA – Umbilical Interface Assembly
VES – Vacuum Exhaust System
VRA – Vent and Relief Assembly
VRS – Vacuum Resource System
WVA – Water Vent Assembly

SIGNATURE		DATE
DSGN	B. HAMITER	12-9-97
ENGR	AMY LIN	6-9-98
ENGR		
ENGR		
APP		
ENGR		
APP		
PCN		

NATIONAL AERONAUTICS AND SPACE ADMINISTRATION
LYNDON B. JOHNSON SPACE CENTER HOUSTON, TEXAS

ECLSS FUNCTIONAL OVERVIEW

PROGRAM	SIZE	DWG NO.	REV
ISS	D	ECLS1B-USOV-8A	A
SCALE NONE			SHEET 1 OF 1

[ECLS1B-USOV-8A]

Figure 6-8. ECLSS Functional Overview

TD9702A

6.6.3 Milestones

There are three major milestones in the buildup of USOS ECLSS capabilities. On Flight 2A, Node 1 contains the first pieces of USOS ECLSS equipment, consisting principally of ventilation and Fire Detection and Suppression equipment. Next, on Flight 5A, the Lab module carries a majority of the U.S. ECLSS equipment discussed in this manual, including major portions of all subsystems. Finally, on Flight 7A in the Airlock, the full capabilities of Atmosphere Control and Supply are enabled, and additional Temperature and Humidity Control and Fire Detection and Suppression equipment ensures crew health and comfort during EVA operations.

Questions

1. The Atmosphere Revitalization Subsystem is primarily responsible for
   a. Adding oxygen and nitrogen into the cabin atmosphere
   b. Circulating atmosphere throughout the Station
   c. Removing contaminants from the cabin atmosphere
2. At 8A, the USOS Water Recovery and Management Subsystem does all of the following except?
   a. Provide collection, storage, and venting of condensate water
   b. Transport water within the USOS
   c. Automatically transport water between the USOS and ROS
3. What subsystem's equipment depends on air circulation by the Temperature and Humidity Control Subsystem to operate properly?
   a. Fire Detection and Suppression
   b. Water Recovery and Management
   c. Atmosphere Control and Supply
4. At Flight 8A configuration, the Station's oxygen supply is provided by the oxygen generator in the Russian segment. Which of the following is NOT available as a backup oxygen supply?
   a. The oxygen generator in the Lab
   b. Solid Fuel Oxygen Generator in the Service Module
   c. The oxygen tanks stored outside the Airlock
5. Which of the following delivers air samples from all USOS modules to the Major Constituent Analyzer?
   a. Sample Delivery System
   b. Intermodule Ventilation System
   c. Vacuum System

6. The Common Cabin Air Assembly functions include all of the following except?
   a. Circulation of air between modules
   b. Removal of atmospheric humidity
   c. Control of atmospheric temperature
7. During a fire event, crew members must wear a Portable Breathing Apparatus while discharging a Portable Fire Extinguisher because
   a. A constant oxygen supply is required to prevent the crew member from hyperventilating
   b. When the software detects a fire, it automatically depressurizes the module so the crew must have a supplementary oxygen supply
   c. The Portable Fire Extinguisher contains carbon dioxide that could cause the crew member to lose consciousness if not directly supplied with oxygen

Section 7
Guidance, Navigation, and Control Overview

7.1 Introduction

The Station's Guidance, Navigation, and Control (GNC) System includes both the United States (U.S.) GNC System and the equivalent Russian Orbital Segment Motion Control System (ROS MCS). Emphasis in this section of the manual is on the U.S. GNC System, but some ROS MCS functionality is covered to give a complete view of the system.

GNC can be divided into six functions. These functions are ***Guidance, State Determination, Attitude Determination, Pointing and Support, Translational Control, and Attitude Control.*** The inputs from GNC sensors are processed in Navigation and Control software, which implements these functions, using the GNC effectors. The focus of this lesson is to describe the ISS navigation and control functions.

7.2 Objectives

After completing this section, you should be able to:

- Describe the six GNC functions
- Explain the general capabilities of the ISS Control Moment Gyroscopes (CMGs) to maintain a preferred attitude
- Explain the characteristics of the attitude regimes that have the most significant impact on other International Space Station (ISS) systems, and describe these impacts
- Summarize the interfaces between U.S. GNC and the other ISS systems
- Summarize how the U.S. GNC System redundancy is supported through interfaces with other ISS systems.

7.3 U.S. Guidance, Navigation, and Control System Description

7.3.1 Guidance

Guidance is used to tell the Station which route to follow from point A to point B. For the Station, this is generally executed as a reboost. The U.S. GNC System provides some guidance planning support; however, guidance is generally a Russian function and is not covered here.

7.3.2 Navigation

Navigation is the label given to the trio of *State Determination*, *Attitude Determination*, and *Pointing and Support* (P&S). ***This definition is different from that used on Shuttle, where navigation and state determination terms are used interchangeably***. State Determination answers the question "Where am I?", Attitude Determination answers the question "How am I oriented?", and Pointing and Support answers the question "Where is everything else?". The U.S. GNC Navigation Subsystem consists of software components residing in U.S. GNC Multiplexer/Demultiplexers (MDMs) and a set of GNC Orbital Replacement Units (ORUs). The U.S. GNC Navigation Subsystem maintains the onboard estimate of the position, velocity, attitude, and attitude rate of the International Space Station after Flight 8A.

7.3.2.1 State Determination

State Determination provides the Space Station state vector (position and velocity at a specific time). Two Receiver/Processor (R/P) sensors allow access to the Global Positioning System (GPS)[1], ***which permits the Station to determine its position and velocity without ground support***. The GNC flight software maintains precision estimates of position and velocity through propagation algorithms. These propagators accept periodic updates of the state vector data. Data is nominally provided by GPS but may also be provided by ROS or ground-based updates. The Russian Global Navigational Satellite System (GLONASS) functions similarly to the GPS and provides independent state vector data for the ROS MCS. ***The ROS MCS exchanges data with the U.S. GNC Multiplexer/Demultiplexers (MDMs) for redundancy and comparison tests.***

[1]The Global Positioning System (GPS) is a U.S. satellite system that allows users to determine their position and velocity.

7.3.2.2 Attitude Determination

In addition to becoming the prime U.S. source for state determination, the GPS also becomes the prime U.S. source for attitude determination at Flight 8A. ***The U.S. GNC System uses a GPS interferometry technique to determine the attitude of the Station.*** Figure 7-1 outlines the interferometry concept as applied to attitude determination.

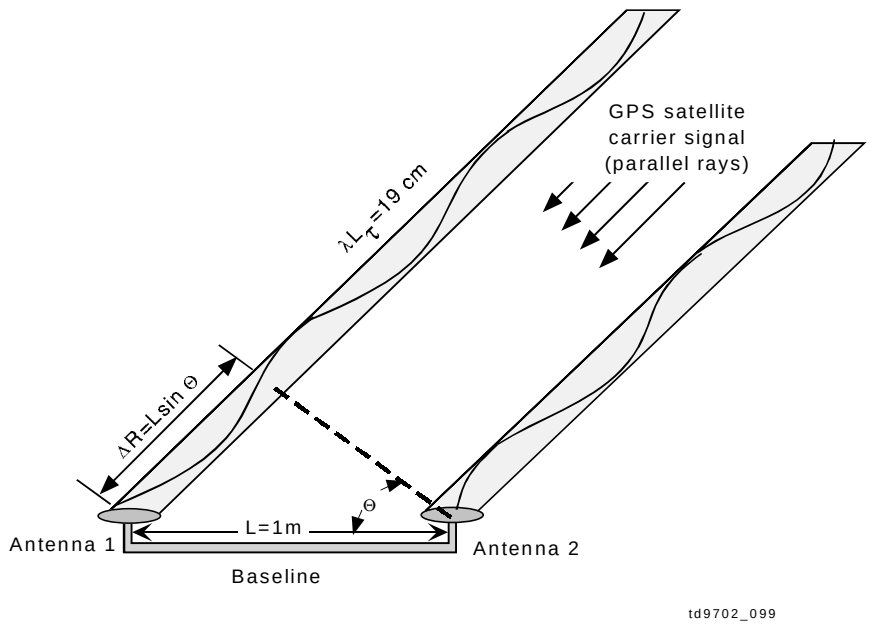

Figure 7-1. Interferometry

GPS provides attitude updates to the U.S. GNC software once every 10 seconds. The GNC software filters this data and outputs a new attitude estimate. ***Two Rate Gyro Assemblies (RGAs) provide attitude rate information to propagate the attitude between GPS updates.***

Although the U.S. GNC System is the prime source for attitude information, ***attitude data is constantly exchanged between ROS Terminal Computers and U.S. GNC MDMs.*** The ROS MCS has several hardware sensors to determine the Station's attitude and attitude rate. The sensors include star sensors, Sun sensors, horizon sensors, magnetometers, rate gyros (for measuring the Station's attitude rates), and GLONASS receivers/processors. The sensors in ROS MCS include multiple layers of redundancy.

State determination defines where the Station is located and attitude determination defines how the vehicle is oriented. The final component of Navigation, the Pointing and Support Subsystem, answers the question "Where is everything else?".

7.3.2.3 Pointing and Support

The Pointing and Support (P&S) Subsystem passes state vector, attitude, and attitude rate data to other Station systems. P&S is the GNC Subsystem to which most other U.S. systems have their GNC interface.

After activation of GNC MDMs at 5A, GNC provides pointing information (target angles) to the U.S. Photovoltaic Arrays (PVAs) and the high-rate S-band antenna. The Communication and Tracking (C&T) System uses the P&S calculations of Tracking Data and Relay Satellite System (TDRSS) line-of-sight and set and rise times for articulating their communications antennae (e.g., high rate S-band, Ku-band). Solar pointing vectors and eclipse data are sent from the P&S to the External Active Thermal Control System (EATCS) for thermal radiator orientation. P&S also calculates Station mass properties, including adjustments for the location and mass properties of dynamic objects such as the Mobile Servicing System (MSS) and robotics arms. [Note that it does not make adjustments for payloads moved by the Orbiter Remote Manipulator System.] The GPS time to the Command and Control (C&C) MDM to synchronize timing in all MDMs is also provided by the P&S.

The P&S Subsystem also generates a quality indicator flag for all calculations, which informs other systems when the Station's attitude and orbit knowledge is degraded. For example, if the GNC System knows it has a bad state vector, it is probably not providing accurate P&S data for C&T pointing. The system would set the quality indicator flag to "degraded" or "invalid".

7.3.3 Control

Control is the method of implementing the route determined by Guidance. Control of the Station consists of ***translational control*** **and** ***attitude (or rotational) control***. Translational maneuvers are necessary to achieve the Station's desired orbit, while attitude control is necessary to maintain the orientation of the Station within a selected reference frame[2].

7.3.3.1 Translational Control

The Station maintains its altitude by performing reboosts every 3 months to offset orbital decay from aerodynamic drag. Onboard propulsion for reboost is provided by the ROS MCS Subsystem. Translational control commands are executed by Mission Control Center-Moscow (MCC-M). Mission Control Center-Houston (MCC-H) plans and monitors the reboost operation.

The primary method for conducting a reboost is using the main engine of a docked transport cargo vehicle, typically a Progress M1. Progress's main engine is limited to burning only the amount of fuel contained within the Progress propulsion system propellant tanks. When necessary, the Service Module (SM) and Functional Cargo Block (FGB) can transfer fuel to the docked Progress during a reboost. In this scenario, the Progress's Rendezvous and Docking (R&D) thrusters are used, instead of the main engine, due to fuel flow limitations. In both cases, Station reboosts are open loop burns, where the firing is initiated at a prescribed time and place in orbit. If no Progress is currently docked when a reboost is needed, the SM engines can also be used to conduct a reboost. However, it is desirable to limit the firings of SM main engines, since they have a limited burn lifetime.

---

[2] For more information about Station reference frames, see Appendix C.

Translational control also enables the Station to maneuver out of the way of orbital debris. These maneuvers are similar to a nominal orbit correction but are planned and executed within a compressed schedule. U.S. SPACECOM provides tracking data on space debris 10 centimeters (cm) or larger to MCC-H flight controllers, who recommend to the Flight Director a debris avoidance maneuver, when deemed necessary. A typical debris avoidance maneuver (i.e., a raise of orbital altitude by 4 kilometers (km)) could be executed with 1- to 3-days notice.

7.3.3.2 Attitude Control

Attitude control is initially provided entirely by the ROS Propulsion System. Later in the assembly period, additional capabilities are phased in. These new capabilities include the addition of a U.S. nonpropulsive Attitude Control Subsystem (ACS). This subsystem consists of software and hardware components. The ACS software resides in two U.S. GNC MDMs, and controls four Control Moment Gyroscopes (CMGs) located on the Z1 truss.

Control Moment Gyroscopes

The CMGs are massive (about 300 kg. each), two degree-of-freedom gyroscopes. The gimbals allow the U.S. GNC software to reposition the direction of the rotor spin axis. ***By repositioning the axes of the four gyroscopes, the GNC software directs the CMGs to generate torques that counter some of the Station's attitude disturbances***. These disturbances are caused by gravity gradient forces, aerodynamic drag, etc. Each CMG can generate 256.9 Newton-meters (Nm) of torque.

The activation of the CMGs after 5A provides the first opportunity for the Station to perform high-quality microgravity activities for extended periods. Also, nonpropulsive attitude control with the CMGs is used extensively to conserve propellant supplies, even when a quality microgravity environment is not required.

Control Moment Gyroscope Saturation

The Station's ability to conduct nonpropulsive attitude control using the CMGs is not without limits. While the CMGs have no hard stops (unlike the Skylab CMGs), there are limitations on the amount of torque they can generate and the amount of momentum they can store. ***The CMGs can reach a point where the disturbance torques in a particular direction exceed the capability of the CMGs to provide countering torques. This point is called "CMG Saturation."*** If saturated, the CMGs can no longer apply counter torques to prevent undesirable Station rotation. The system has been designed to take corrective action before this situation occurs by requesting a "desaturation" of the CMGs. (During nominal coast operations, the Station should go for extended periods of time (at least, for a month) without reaching CMG saturation.)

Control Moment Gyroscope Desaturation

When the CMG momentum reaches a settable threshold, such as 80 percent of the way to saturation, the GNC System may automatically request a Russian thruster firing. The thrusters

are fired in a calculated manner such that they cancel the torques that are generated by the CMGs. This allows the GNC software to reset the CMG gimbals to a more optimal position.

CMG Maneuvers

Because of the limited torque capability available from the CMGs, their ability to maneuver the Station is small. Another limitation is the lengthy[3] period of time it takes to maneuver the Station to a new attitude. During large maneuvers, the CMGs are likely to saturate often, requiring frequent thruster firings for desaturation. Current operational concepts call for using the CMGs (with Thruster Assist for desaturations) to rotate the Station when maneuvers are less than 10° per axis or when schedules are not adversely impacted by slow maneuvers.

7.3.4 Attitude Regimes and Operational Impacts

The reader may be aware of Local Vertical/Local Horizontal (LVLH) and inertial attitudes for spacecraft. On Station, there are two attitude regimes, Torque Equilibrium Attitude (TEA) and X-Axis Perpendicular to Orbit Plane (XPOP), which are not pertinent to Shuttle attitude control, but may be extensively used on Station. Maintaining these attitude regimes creates significant impacts for Station systems.

[3] For example, for the maximum rate of an attitude maneuver, which is 0.1 deg/sec, a 180° turn requires 30 minutes.

7.3.4.1 Torque Equilibrium Attitude

Although several forces act on the Station (e.g., gyroscopic forces, such as those induced by the thermal radiator rotary joints), the two primary external torques that are of concern to the GNC System are gravity gradient torques and torques arising from aerodynamic drag, as illustrated in Figure 7-2.

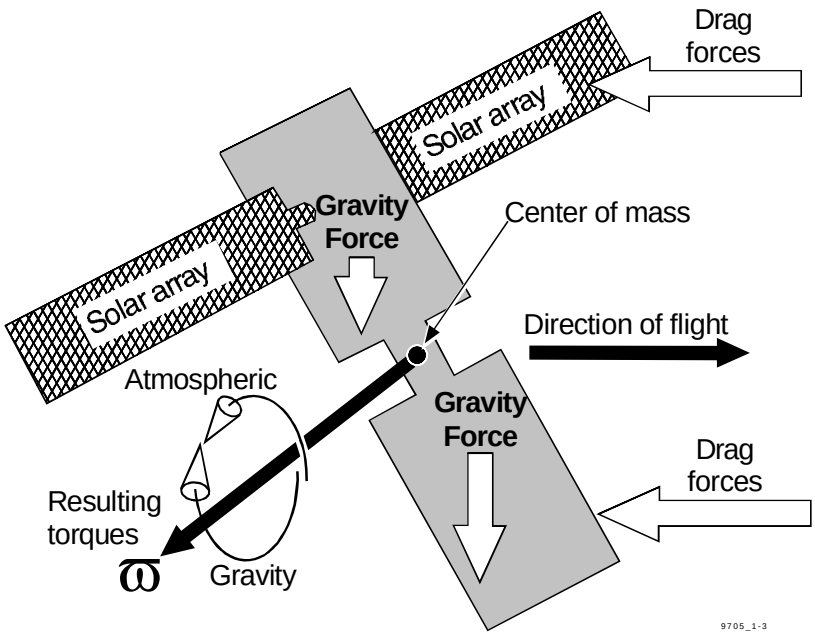

Figure 7-2. Major Station Torques

The majority of the aerodynamic drag forces result from the large surface area of the solar arrays. This drag imparts a torque about the Station center of pressure.

The gravity gradient torque is caused by the gravitational attraction on the Station modules. The pull of gravity is greater near the Earth and less farther away from the Earth. This gravity gradient torque creates a rotation about the Station's center of gravity.

Note that there are also other torques acting on the Station, such as internal torques generated by the CMGs, robotic operations, vents, and motors. ***Attitudes where all the torques balance out at zero over the course of an orbit are known as orbit average TEAs***[4]. During some portions of the orbit, the atmospheric drag torque might be larger than the gravity gradient torque, and during other times, the opposite may be true. However, over an entire orbit in TEA, the torques average to zero.

While there may be a large number of TEAs possible, the Station nominally seeks those about an LVLH attitude. This was a design decision to reduce the amount of analysis necessary for the

---

[4] Orbit average TEAs are the most commonly used for Station. Henceforth, any mention of "TEA" should be assumed to be an orbit average TEA, unless noted otherwise.

Space Station flight profiles. The Station is controlled about one of these attitudes, using the onboard CMGs.

7.3.4.2 Torque Equilibrium Attitude Impacts

Flying a TEA is the best available option when using the CMGs. ***The zero average torques over an orbit result in less frequent CMG System saturation and help to minimize propellant usage.*** However, there are disadvantages.

When commanded to a TEA, the Station is not flying an exact attitude. The GNC software varies the attitude slowly over an orbit (±2.5° at assembly complete and up to ±11° during the assembly buildup) to use the CMGs' capabilities most effectively.

For example, consider a man walking against a 20-mph headwind. On the way to his destination, the man leans into the wind and uses his body weight to counteract the wind force that would otherwise blow him over. On the way back, when the wind is behind him, the man leans backward into the wind and uses his weight to keep from being blown forward. Over the course of the walk, the man's average posture is straight up, even though he wobbled about that position. The U.S. GNC System offsets the Station's attitude slightly, to either side of the orbit average TEA, to use the Station's "weight" (i.e., gravity gradient) to offset the aerodynamic drag. The resultant change in the environmental torques helps to maintain the minimum momentum usage of the CMGs.

7.3.4.3 X-Axis Perpendicular to Orbit Plane

Up until 12A, the Space Station does not have both of the solar array gimbals necessary for effective solar pointing. When the solar beta angle is large (>37° on some assembly flights, >52° for others), the Station is unable to obtain sufficient electrical power from the arrays, while flying an LVLH attitude.

A solution to this problem is to fly the Station in an X-Axis Perpendicular to Orbit Plane (XPOP) orientation. XPOP attitude regime maintains the Station attitude close to the quasi-inertial reference frame that can be visualized by a 90° clockwise yaw of the LVLH frame at orbital noon. The X-axis is perpendicular to the orbital plane, while both the Y- and Z-axes lie in the plane. This orientation allows the single solar array rotary joint along the Station body Y-axis to track the Sun at any solar beta angle.

7.3.4.4 Impacts of XPOP on the Station

Flying XPOP generates new concerns or issues related to (a) power generation, (b) thermal control, (c) Communication and Tracking (C&T), and (d) GPS antennae blockage.

a. ***Flying XPOP increases the ability of the Station to generate power from the solar arrays***. The rotation from LVLH allows the beta gimbal to track on the Sun.

b. ***XPOP creates a thermal problem for the Station***. The systems were not originally designed to be flown in this attitude, and some lack adequate interfaces to the Thermal Control System

(TCS). XPOP results in the same side of the Station facing the Sun, while the other side faces the darkness of deep space. While Orbital Replacement Units (ORUs) on one side of the Station may overheat, those on the other side may freeze.

c. ***Blockage of the antennae by the Station structure is common while flying XPOP.*** The antennae on the Station were designed and positioned for a vehicle flying in an LVLH attitude, where one side of the vehicle is always oriented towards the open space. The blockage interferes with the voice communications, commands, and telemetry being sent to and from the ground. Whereas nominal LVLH C&T coverage is between 60 to 90 percent during an orbit, in XPOP the nominal coverage may be between 5 to 40 percent.

d. ***Similarly to C&T, the GPS antennae experience increased blockage of satellite signals while at an XPOP attitude.***

7.3.5 GNC Software Operational Modes

Having both U.S. GNC and ROS MCS systems onboard, makes for many operational challenges. In response, control of the systems has been managed through the use of GNC software modes. ***GNC modes provide flexible management of Station operations and dictate whether the U.S. or ROS system is in charge of providing attitude control.*** This is critical to Station operations, since only one GNC system can safely control the vehicle. The Station U.S. GNC modes are CMG Attitude Control, CMG/Thruster Assist, Drift, User Data Generation Only, Wait, and Standby.

The CMG Attitude Control mode uses only the CMGs for controlling the Station. While in this mode, the U.S. GNC System provides full GNC services to the Station systems. ***This mode is used for microgravity operations.***

CMG/Thruster Assist mode is very similar to the CMG Attitude Control mode, except now, the ROS MCS is authorized to use the Propulsion System to desaturate the CMGs. This mode also provides full GNC services to the Station users.

The U.S. GNC has no active attitude control of the Station in the Drift and User Data Generation Only modes but does generate P&S data for system users. Wait mode is a mode of U.S. GNC MDM warm backup, and Standby mode is used during U.S. GNC MDM initialization to configure GNC ORUs.

The ROS MCS has a similar set of Station control modes. When the U.S. GNC is in Drift, the ROS could be in either drift or under active attitude control.

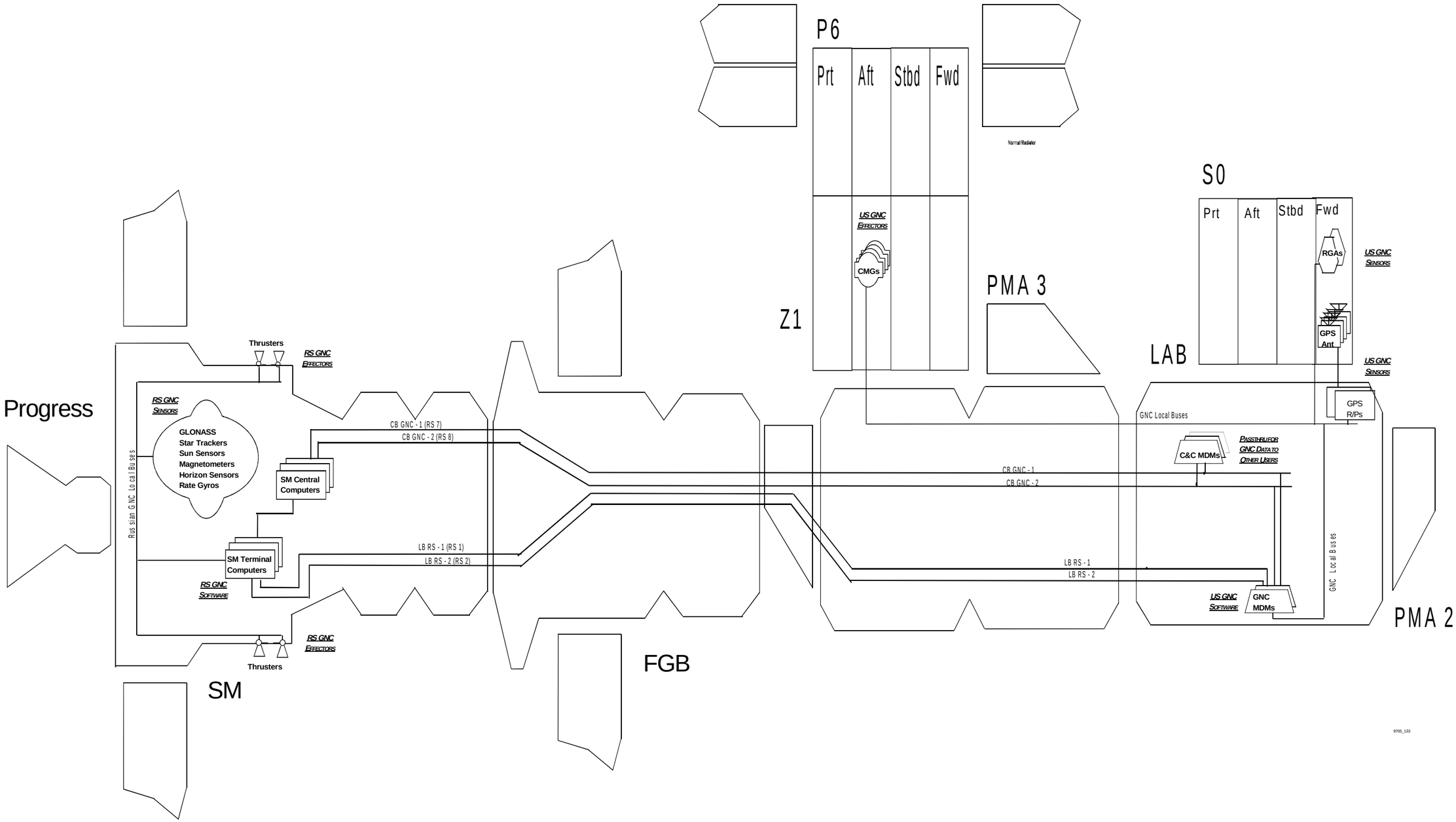

Figure 7-3. 8A GNC ISS schematic

7.4 System Interfaces

The GNC System interfaces with many other systems, such as Command and Data Handling (CDH), Electrical Power System (EPS), Thermal Control System (TCS), Communications and Tracking System (C&T), and Robotics. It also has a relationship with Environment Control and Life Support System (ECLSS). The impact of a system failure may be reflected in another system and demonstrates the usefulness of system redundancy.

7.4.1 Command and Data Handling

The GNC interfaces with CDH at the MDM level (Figure 7-4) can be characterized as multiple MDMs communicating together over multiple buses. For GNC operations, this involves communications among U.S. Command and Control (C&C) MDMs, the U.S. GNC MDMs, the Russian Central Computers (CCs) in the SM, and the Russian Terminal Computers (TCs) in the SM.

For communication with the ROS MCS, two U.S. GNC MDMs (one a primary and one a "warm" backup) are tied to three Russian TCs across two 1553 buses (local buses RS Bus-1 and RS
Bus-2). This link is used for transmitting detailed GNC commands and data to and from the ROS MCS. Another path exists between the C&C MDMs and the three SM CCs for transferring Station moding information.

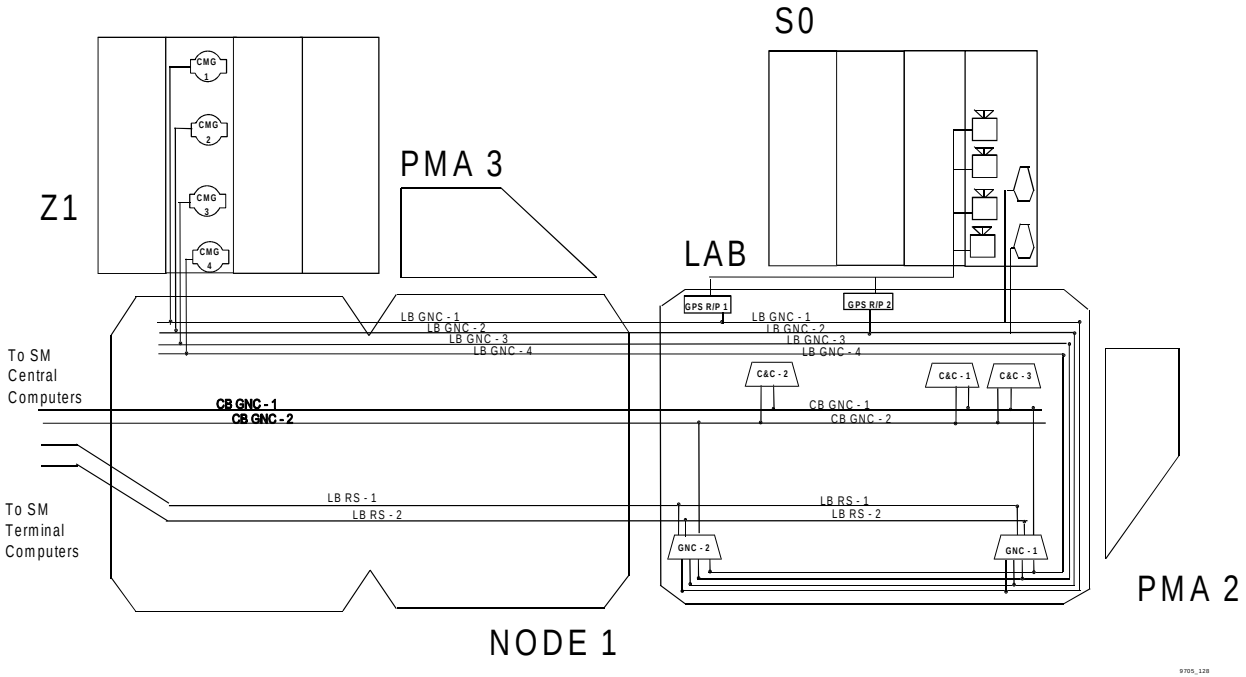

Figure 7-4. GNC/CDH interface

CDH supports the Station GNC redundancy by providing communication between ROS and U.S. GNC Systems. Additionally, the GNC MDMs talk to the U.S. GNC sensors and effectors

across the CDH network. ***Each of the GNC ORUs are distributed across individual GNC local buses. This provides for both redundancy in communication and increased fault tolerance.*** As illustrated in Figure 7-4, if Local Bus (LB) GNC-2 is lost, the GNC System loses the ability to communicate with GPS R/P-2, CMG-2, RGA-2 but will still have another GPS R/P, RGA, and three other CMGs available.

The U.S. GNC MDMs communicate with the U.S. C&C MDMs about Station and GNC modes, GNC Fault Detection, Isolation, and Recovery (FDIR), and provides GPS time for all MDMs' synchronization. The U.S. GNC MDM also acts as a pass through for the Orbiter Interface Unit (OIU) to the Station C&C MDMs.

7.4.2 Electrical Power System Interfaces

The EPS interface to GNC (Figure 7-5) is very similar to CDH in that multiple ORUs are spread over several channels to prevent loss of the GNC System with the failure of a single channel.

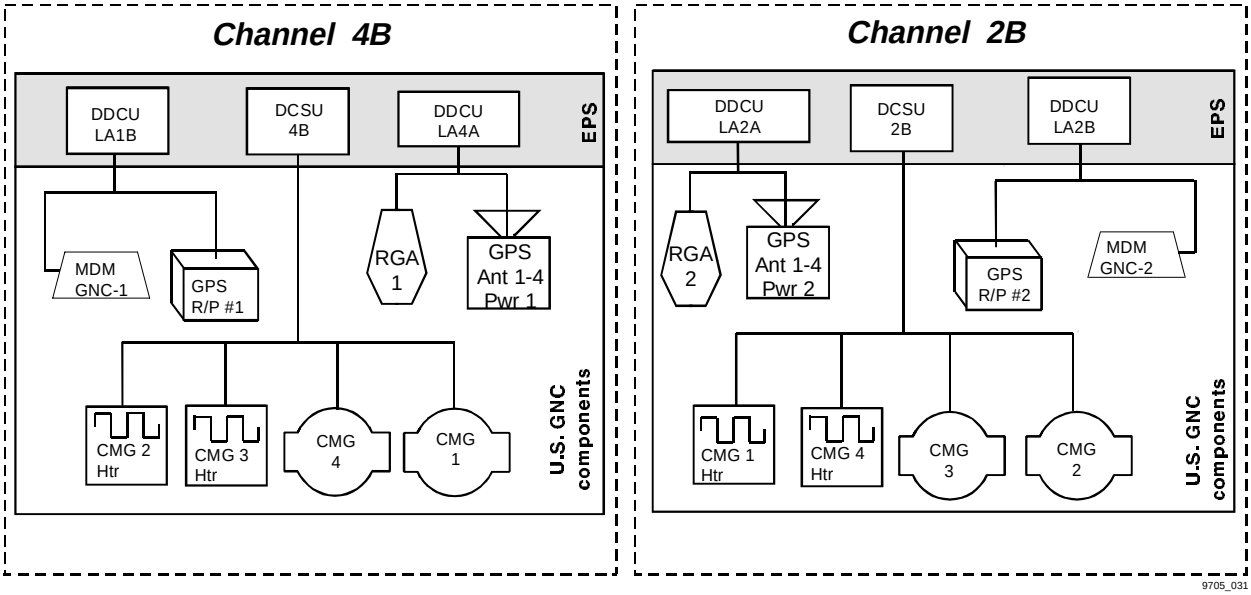

Figure 7-5. GNC/EPS interface

In the 8A Station configuration, there are two main sets of PVA/battery power sources, which are represented by the power channels designated as 2B and 4B. As shown in Figure 7-5, the loss of a power channel removes power from two CMGs, which might be enough to compromise Station microgravity operations, although limited U.S. non-propulsive attitude control is still possible.

The GNC P&S Subsystem provides EPS with calculated alpha and beta gimbal angles[5] to point the PVAs. P&S can determine the beta joint angle by using either the sensor-reported alpha joint angle or a software-calculated alpha angle. Therefore, a resolver failure on the alpha

[5] For more information on alpha and beta angles see ISS Fam Manual, Section 1

joint need not invalidate the P&S beta target angle. However, if P&S is lost, the PVAs are commanded to a constant rotation rate mode (no hard stops), possibly resulting in eventual degradation of power generation.

Should a power channel experience sufficient overload, the CMGs, RGAs, both GPS R/Ps, and antennae are available for shedding. The GNC MDMs are excluded from load shedding.

Safety requirements demand that the ROS MCS inhibit all thruster firings during all solar array and radiator actuations, both deployment and retraction. If necessary, for attitude control or desaturations, these inhibits may be removed, should the array or radiator become stuck during deployment or retraction.

7.4.3 Thermal Control System

The GNC Lab hardware (GNC MDMs and GPS R/Ps) are mounted on coldplates on the Moderate Temperature Loop (MTL). Should there be a problem in the MTL, only some of these ORUs are switchable to the Low Temperature Loop (LTL). Therefore, loss of the MTL may cause the loss of multiple power and data interfaces. ***Shutting down the MTL (e.g., because of a leak) could result in the loss of both GPS R/Ps, one GNC MDM, and one C&C MDM.*** The GNC hardware mounted external of the U.S. Lab (CMGs, RGAs, and GPS Antenna Assemblies (AAs)) have no interfaces to the TCS loops. Instead, CMGs and GPS AAs have their own heaters, while the RGAs require no separate heating or cooling. ***In turn, the GNC P&S subsystem provides TCS with the Sun line-of-sight for radiator pointing.***

7.4.4 Station Robotics Interface

Robotic manipulation of payloads that are 2000 kilograms (kg) or more, over relatively large distances, causes rapid changes in the Station mass properties. ***The U.S. GNC P&S Subsystem calculates updates to the Station mass properties at 0.1 Hz to support stable attitude control.*** Position and rate of movement data from all onboard Station robotics are relayed to the U.S. GNC System. Moving large masses requires coordination with the MCC-H GNC flight controller so that resulting momentum does not exceed the capabilities of the CMGs.

The robotics operation during assembly often requires that Station thrusters be inhibited from firing. Desaturation burns may cause premature contact that might result in damage to the Space Station Remote Manipulator System (SSRMS), payload, or target. If the CMGs saturate in this configuration, the U.S. GNC System automatically modes to drift, and attitude control is automatically handed over to the Russian Segment. Because the Russian thrusters are inhibited, the overall Station goes into a free-drift state.

7.4.5 Communications and Tracking

C&T provides the GNC System with command uplink and telemetry downlink capability that enables the GNC Flight Controller to monitor and control the system. ***GNC provides C&T with P&S vectors to aim the antennae at TDRSS or ground sites and forecasts TDRSS rise and set times for one orbit into the future***. GNC provides pointing without concern for the locations of Station structures, such as PVAs or truss elements.

Until 8A, P&S is dependent on Russian state and attitude information, so if the MCC-H GNC Flight Controller experiences a problem with the ROS MCS, it could easily impact other systems. Analysis indicates that high-rate S-band is lost in less than a minute should pointing be lost (low-rate S-band does not need GNC pointing). Ku-band continues to track TDRSS until the satellite is obscured by Earth, at which point, it is lost. Accurate pointing would then be necessary to re-acquire Ku-band.

7.4.6 Environmental Control and Life Support System

The MCC-H ECLSS Flight Controller needs to inform the GNC Flight Controller of planned activities and off-nominal situations that may affect attitude, such as an unscheduled venting. During the assembly time frame, there are several vents (e.g., U.S. Lab 1 Vacuum Exhaust and U.S. Lab 4 Carbon Dioxide (CO_2) vents) that are large enough or last long enough to cause attitude control problems with the momentum management software in the U.S. GNC MDMs. The GNC flight controller also needs to be informed if there are rapid or unplanned changes in consumables (i.e., water) that need to be accounted for in the Station's mass properties.

7.5 Summary

There are two independent GNC systems onboard the Station, ROS MCS and U.S. GNC, with the U.S. GNC System considered the prime Station source for state and attitude information. These systems support the six GNC functions of Guidance, State Determination, Attitude Determination, Pointing and Support, Translational Control, and Attitude Control. The U.S. GNC and ROS MCS provide complementary systems except for propulsion (only a ROS MCS asset) and Pointing and Support, for articulating U.S. equipment.

The initial ROS ability to maintain altitude and attitude through the use of its propulsive system is augmented by the four U.S. CMGs. By repositioning the axis of all four gyroscopes, the GNC software allows the CMGs to generate torques to counter the Station's attitude disturbances. When the disturbance torques exceed the CMGs absorption capability, it is known as "CMG Saturation." ROS thruster firing is used to reset or "desaturate" the CMGs. The U.S. GNC uses the CMGs for nonpropulsive attitude control, allowing the Station to maintain microgravity operations and attitude regimes beneficial for effective momentum management or power generation. Slowly varying attitude where all the torques balance out to zero over the course of an orbit is known as TEA. Flying TEA is the best available option when using the CMGs, because it minimizes the momentum usage of the CMG System and decreases the propellant usage. While TEA is preferred during the early stages of Station assembly, power limitations require the use of the XPOP attitude regime. XPOP is designed to point the X-axis perpendicular to the orbital plane, while both the Y- and Z-axes lie in the orbital plane. While satisfying the power generation requirement, XPOP does create some thermal, communications, and GPS coverage concerns.

The CDH, EPS, TCS, ECLSS, C&T, and Robotics Systems all have the ability to impact how well GNC performs or can be impacted by GNC's performance. CDH and EPS Systems have similar GNC interfaces that can be characterized as multiple MDMs communicating together over multiple buses. TCS provides heating and cooling for various GNC systems, such as GNC

MDMs, GPS R/Ps, etc. ECLSS needs to keep GNC apprised of situations that may affect attitude, such as unscheduled venting. Robotics data is sent to GNC software to support the stable attitude control and to avoid damage to the Station. C&T provides the GNC System with uplink and downlink capability, while GNC provides C&T with P&S vectors. The systems interfaces, as well as an interface with ROS MCS, all provide for U.S. GNC System redundancy, resulting in mission safety, effectiveness, and success.

Questions

1. Briefly describe each of the six functions that U.S./ROS GNC provides to the Space Station.
2. For the following Station operations, determine which effector(s) may be used.

a. Microgravity operations	1. CMGs
b. Drift	2. Progress main engine
c. Attitude hold	3. Progress thrusters
d. Debris avoidance	4. SM main engines
e. Reboost	5. SM thrusters

3. Summarize the limitations of nonpropulsive attitude control and how these limitations may be overcome (if at all)?
4. Describe the method used by U.S. GNC software to counteract instantaneous disturbance torques acting on the Station.
5. Describe (and/or illustrate) the attitude regime that is used to balance the primary external torques on the Station.
6. Given the following scenarios, state which attitude regime most likely:
   a. Increases power generation
   b. Minimizes propellant usage
   c. Creates a thermal problem for the Station
   d. Minimizes the momentum usage of the CMG System
   e. Increases the amount of blockage of antennae and antenna signals
7. Describe the implications for the appropriate systems in each of the following events.
   a. LB GNC-4 has failed
   b. Both LB RS-1 and LB RS-2 have failed
   c. Pointing and support capabilities are degraded
   d. The moderate temperature loop has been shut down
   e. An ECLSS unscheduled venting has occurred

Section 8
Robotics System Overview

8.1 Introduction

The Robotics Systems of the International Space Station (ISS) are used in ISS assembly and maintenance, as well as Extravehicular Activity (EVA) support and payload handling. This section provides an overview of the three different Robotics Systems used on the ISS.

- Mobile Servicing System (MSS)
- European Robotic Arm (ERA)
- Japanese Experiment Module Remote Manipulator System (JEMRMS)

The section identifies the international agencies involved in the development of the Robotics Systems and then focuses on the function, capabilities, and operational aspects of each system. Since the training manual is designed to only cover information on a particular system through Flight 8A, the Robotics Systems which arrive after 8A are covered in less detail.

8.2 Objectives

After completing this section, you should be able to:

- Describe the characteristics of each of the three ISS Robotics Systems, including the operator control method and large/small arm capability
- Identify key operational considerations and redundancy for the MSS Subsystems located on ISS through Flight 8A
  - Space Station Remote Manipulator System (SSRMS)
  - Robotic Workstation (RWS)
  - Mobile Transporter (MT)

8.3 Overview

Development of robotics on the Space Station is an international effort with five agencies working towards the development of the Mobile Servicing System (MSS), the European Robotic Arm (ERA), and the JEM Remote Manipulator System (JEMRMS).

The Canadian Space Agency (CSA) and NASA are working together in the development of the MSS which has five subsystems. CSA is responsible for the Space Station Remote Manipulator System (SSRMS), the Mobile Remote Servicer Base System (MBS), and the Special Purpose Dexterous Manipulator (SPDM). The other two MSS Subsystems, the Mobile Transporter (MT)

and the Robotic Workstation (RWS), are the responsibility of NASA. The second Robotics System, ERA, is the joint responsibility of the European Space Agency (ESA) and the Russian Space Agency (RSA). The third Robotics System, JEMRMS, is the sole responsibility of the National Space Development Agency (NASDA).

Figure 8-1 illustrates where the three different Robotics Systems are used. The MSS is used primarily on the U.S. segments and the truss; the ERA on the Russian segments and the Science Power Platform (SPP); and the JEMRMS on the Exposed Facility (EF).

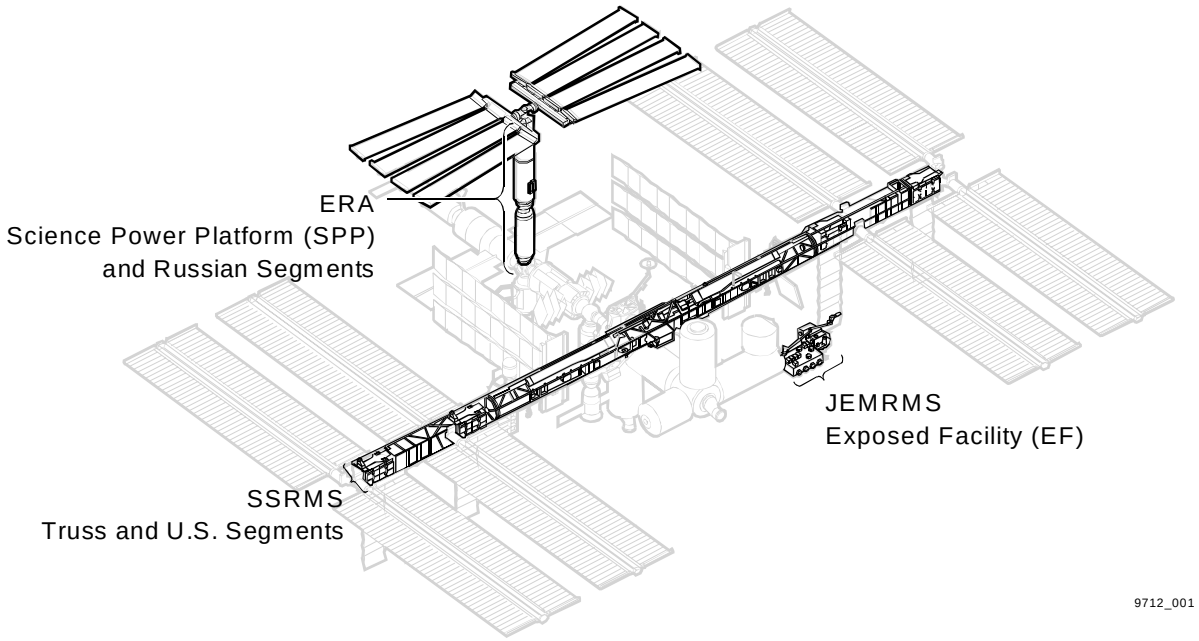

Figure 8-1. ISS locations where the Robotics Systems are used

8.4 Robotics Systems on the ISS

Early assembly flights through Flight 6A rely on the Shuttle Remote Manipulator System (SRMS) for robotics tasks. On 6A, the SSRMS and the RWS arrive to provide the Station with its first robotics capability. These subsystems of the MSS, along with the MT, MBS, and SPDM, are addressed in the order in which they arrive. After the MSS, the ERA and JEMRMS are discussed.

8.4.1 Mobile Servicing System

Almost all the MSS components arrive at ISS on separate flights. Only the SSRMS and two RWSs arrive together on Flight 6A. The later addition of the MT (Flight 8A) and the MBS (Flight UF-2) provides transportation of the SSRMS. The final addition of the Special Purpose Dexterous Manipulator (SPDM) on Flight UF-4 provides dexterous manipulation of Orbital Replacement Units (ORUs). Figure 8-2 displays the external components of the MSS, as well as the RWS, the only internal component.

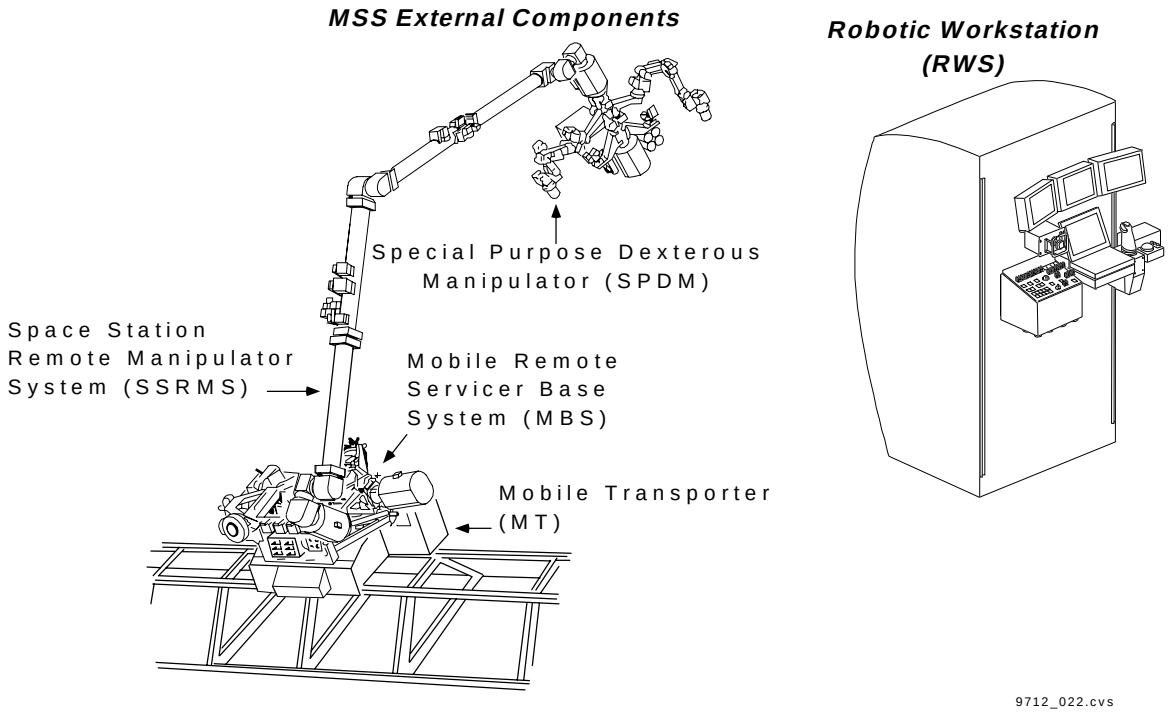

Figure 8-2. Overview of Mobile Servicing System

The main functions of the MSS include assembly of ISS elements, large payload and ORU handling, maintenance, EVA support, and transportation. The MSS is controlled using the RWS from either the Lab or the Cupola. Until the Cupola arrives, there is no direct viewing; therefore, the MSS Video System and the Space Vision System (SVS) provide the main visual inputs. The Video System, combined with ISS Communication and Tracking (C&T) systems, provides video generation, control, distribution, and localized lighting throughout MSS elements. The SVS provides synthetic views of operations using cameras, targets, and graphical/digital real-time position and rate data.

8.4.1.1 *Space Station Remote Manipulator System*

One of the first MSS Subsystems to arrive on the ISS is the Space Station Remote Manipulator System (SSRMS). It is used to handle large payloads and ORUs. Tasks include berthing and unberthing, maneuvering, and performing hand-offs with other Robotics Systems. The SSRMS, illustrated in Figure 8-3, is also able to position the SPDM at worksites, provide EVA support, and perform ISS external inspection. Other capabilities include free-flyer capture and Orbiter berthing (unplanned).

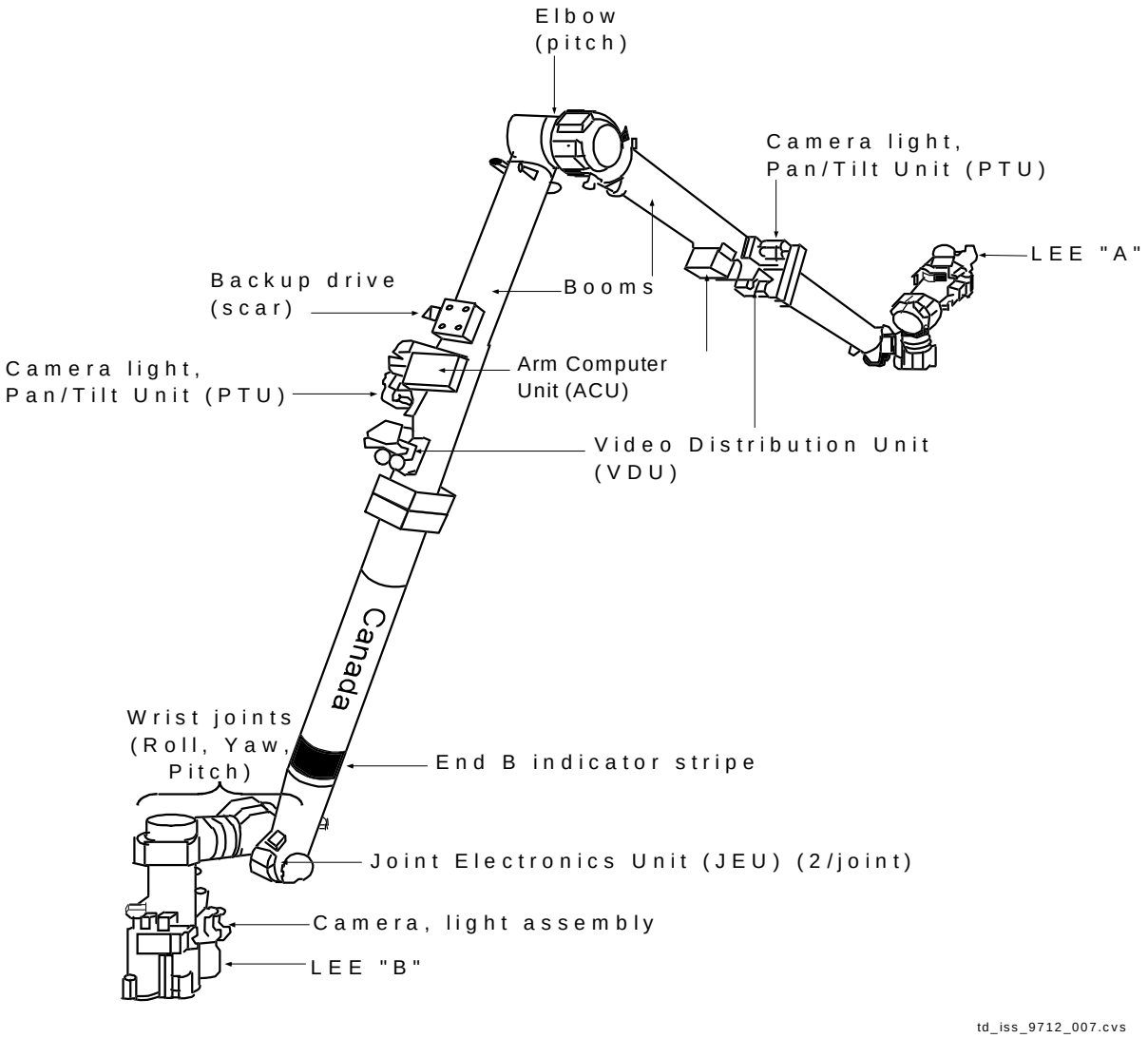

Figure 8-3. Space Station Remote Manipulator System

The SSRMS is a 56-ft (17-m) symmetric manipulator that supports electronic boxes and video cameras. It is composed of several ORUs, including two Latching End Effectors (LEE), two booms, and seven joints that can be rotated +/- 270 °. A LEE at each end of the SSRMS creates a “walking” capability between attach points called Power and Data Grapple Fixtures (PDGFs). This “walking” ability is the only mode of transportation for the SSRMS prior to the arrival of the Mobile Transporter (MT) and the Mobile Remote Servicer Base System (MBS). A LEE is shown in Figure 8-4.

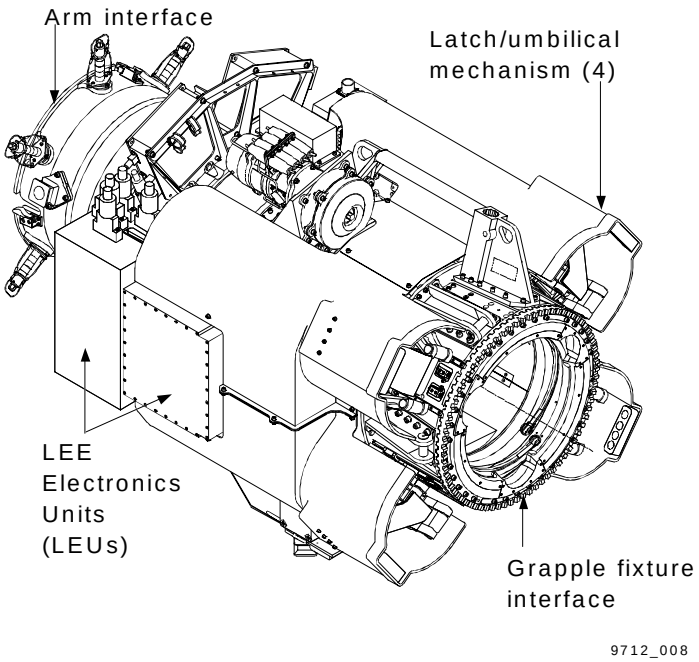

Figure 8-4. Latching End Effector

The SSRMS uses more than one type of grapple fixture on the ISS. One type, the Power and Data Grapple Fixture (PDGF) provides power, data, and video connections to the arm. The PDGF, illustrated in Figure 8-5, is the only interface from which the arm can operate. These grapple fixtures are located throughout the ISS (Lab, Mini-Pressurized Logistics Module (MPLM), JEM, Hab, Functional Cargo Block (FGB), MBS, SPDM) and provide interfaces to other elements and payloads.

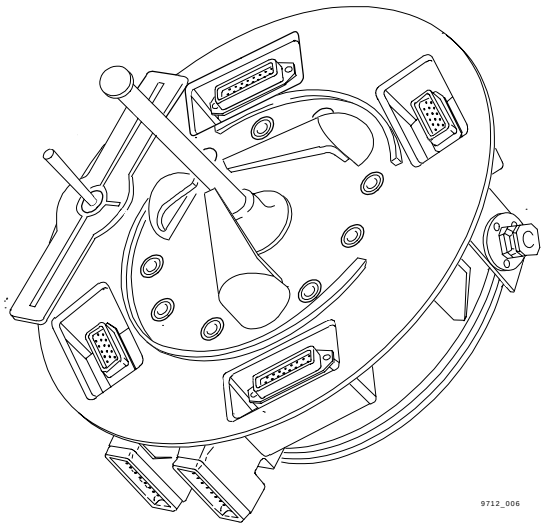

Figure 8-5. Power and Data Grapple Fixture

A second type, the Flight-Releasable Grapple Fixture (FRGF), is primarily used for handling payloads and does not provide any power, data, or video connections. These can be seen along the truss, as well as the elements (Pressurized Mating Adapter 2 (PMA2), Z1, PMA3, P6, Lab, Space Lab Pallet/Lab Cradle Assembly (SLP/LCA), MPLM, Airlock, S0, S1, Node 2, Cupola, P1, and P3/4).

The SSRMS can be operated from only one workstation at a time. When the SSRMS is powered down, the arm software is not loaded, therefore, the health status of the SSRMS is not available to the crew or ground. Due to this software implementation, SSRMS-specific ground support is needed only when SSRMS activities are performed.

For redundancy, the SSRMS has two separate electrical and electromechanical strings which are functionally identical. An ORU failure in one string causes a loss of that string, however, the second string can still be used for operations. A failed ORU is replaced via EVA or Extravehicular Robotics (EVR). Additional redundancy is contained in the LEEs, which have both prime and redundant power and data connections between the SSRMS and the payload. When there is a critical failure involving the SSRMS, the Built-In Test/Equipment (BIT/BITE) detects it, and the SSRMS is automatically entered into a safe state (brakes-on).

8.4.1.2 *Robotic Workstation*

The Robotic Workstation (RWS) provides the operator interface to control and receive data from the SSRMS. On Flight 6A, both workstations are brought up and then placed in the Lab. To provide operators with out-the-window viewing, the second RWS is moved into the Cupola when it arrives on Flight 14A.

The RWS has components which are either external or internal to the rack. The external components, illustrated in Figure 8-6, are portable and include three video monitors, a Translational Hand Controller (THC) and a Rotational Hand Controller (RHC), a Display and Control (D&C) panel, a Portable Computer System (PCS), and an Artificial Vision Unit Cursor Control Device (AVU CCD). Unlike the external components, which are moved between the Lab and the Cupola, the internal components are fixed into the Lab racks. The internal components include an AVU and a Control Electronics Unit (CEU) which houses the RWS software.

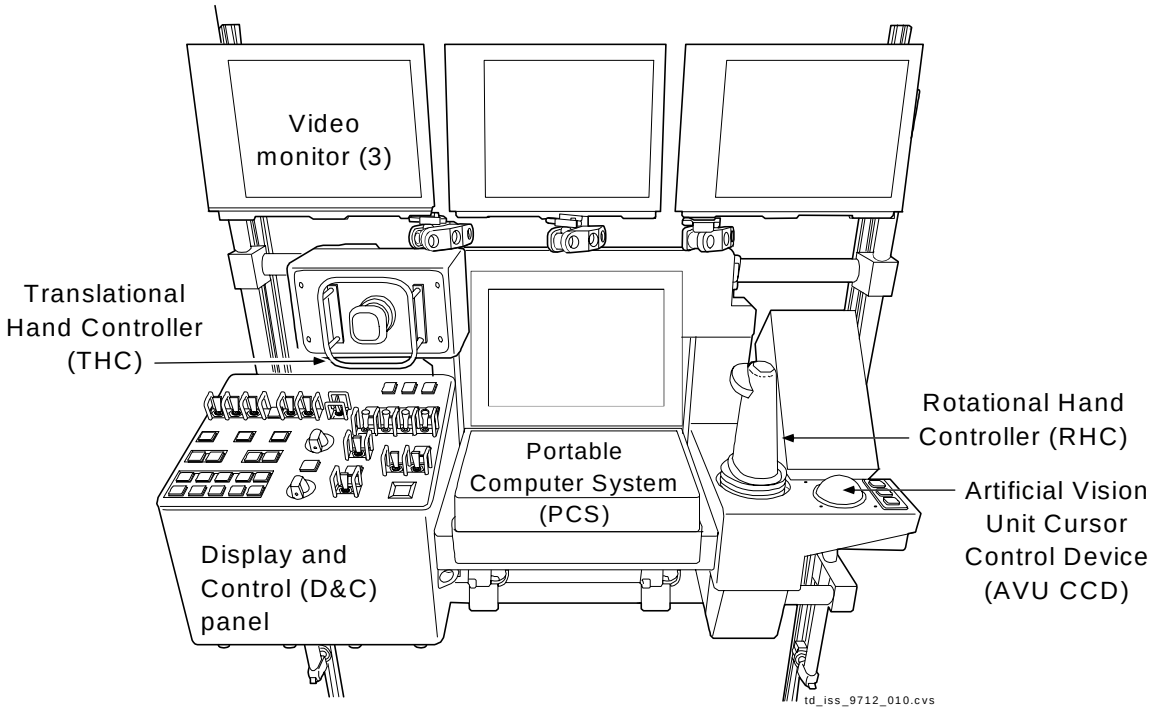

Figure 8-6. Robotic Workstation external components

During operations, one workstation is active (prime), while the second is in monitor mode or powered down. The active RWS has primary control of MSS functions, while the backup only provides emergency stop, control/display of additional camera views, and feedback of function status. If the prime RWS fails, the second workstation can transition from monitor mode to active.

The RWS interfaces with the MSS local bus, the PDGF local bus, and the Command and Control (C&C) bus (to C&C Multiplexer/Demultiplexer (MDM) and PCS). The workstation also provides various modes for operating the SSRMS and Special Purpose Dexterous Manipulator (SPDM), including Manual Augmented mode via hand controller input, Automatic Trajectory mode via prestored and operator input, and Single Joint Rate mode (joint-by-joint movement) via the Translational Hand Controller (THC) and the joint select switch.

8.4.1.3 *Mobile Transporter*

The Mobile Transporter (MT) arrives on Flight 8A and provides structural, power, data, and video links between the ISS and the Mobile Remote Servicer Base System (MBS). It also provides transportation for the SSRMS, SPDM, payloads, and even EVA crewmembers, but not until the MBS arrives. At its greatest velocity (1 inch/sec), the maximum automated translation time is 50 minutes from one end of the truss to the other. When the MT is transporting large payloads across the Station, there can be an impact to the Guidance, Navigation and Control (GNC) System due to the changing mass properties of the ISS. If the Control Moment Gyros (CMGs) are unable to handle the change in momentum, jets may be fired to compensate for the change.

Each of the primary ORUs on the MT, shown in Figure 8-7, contributes to the function of the system as a whole. The Trailing Umbilical System (TUS) provides the power, communication, and video connections between the MT and the ITS. The Umbilical Mechanism Assembly (UMA) provides the capability to transfer power at utility ports for stationary operation of the MBS/SSRMS/SPDM. The UMA can be connected only when the MT is at one of the ten MT worksites along the truss. The Remote Power Control Module (RPCM) provides power switching between appropriate MT power sources and loads. The Linear Drive Unit (LDU) provides for the translation of the MT along the truss rails, while the Roller Suspension Unit (RSU) constrains the MT to the truss. Finally, the Load Transfer Unit (LTU) firmly fixes the MT to the truss at predetermined worksites.

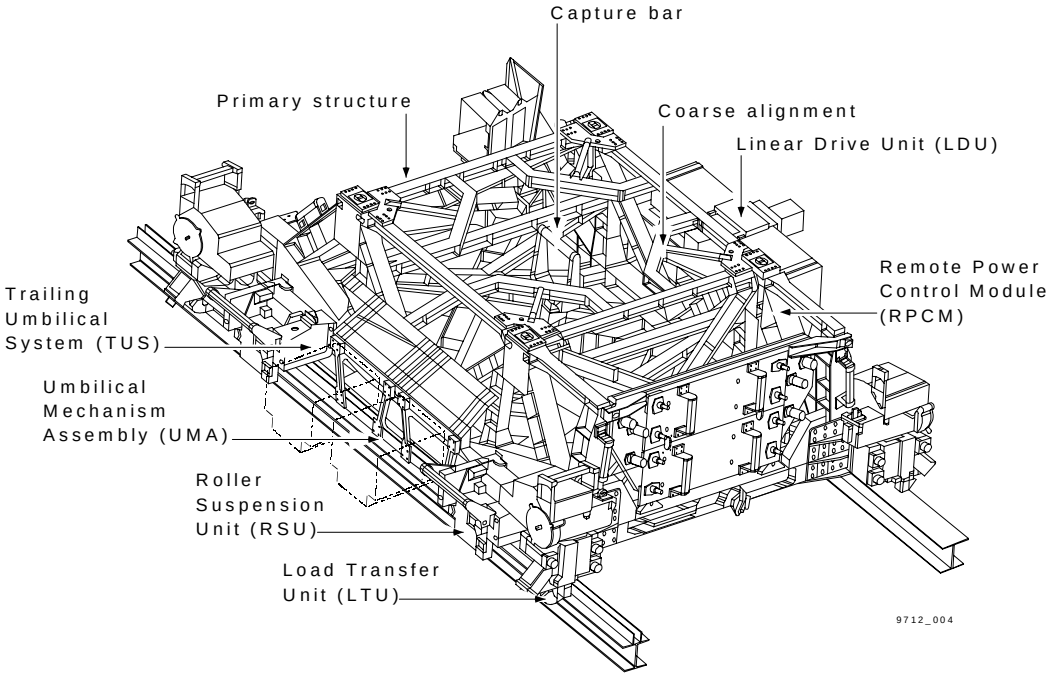

Figure 8-7. Mobile Transporter

Operator interface for the MT is through a PCS Graphical User Interface (GUI) that can be located either at the RWS or connected to another PCS port. Since no switches are needed, total control from the ground is possible, although ground control capability is primarily for powerup and system checkout. The communication interface is given by the Trailing Umbilical System (TUS). The TUS transfers commands from the MT and data from the MBS when at a worksite. It also allows the MBS to send video to the truss. The power interface for the MT is also provided by the TUS, while the MBS receives power through the Umbilical Mechanism Assembly (UMA). After the MT arrives at a worksite, it locks itself down and connects the UMA so it can send power to the MBS.

Loss of the ability to translate the MT when in between worksites is a time-critical situation. If the MBS, SSRMS, or SPDM are on the MT while it is stranded, they cannot receive power; the temperature constraints on the cameras limit the time the power can be off to about 4 hours. To address these possible problems, the MT has some redundant features. There are two functionally independent power and data path strings provided by the TUS and there are two

Umbilical Mechanism Assemblies (UMAs). There is only one Linear Drive Unit (LDU), but it has redundancy built in.

8.4.1.4 *Mobile Remote Servicer Base System*

The next component of the MSS to arrive is the Mobile Remote Servicer Base System (MBS) on Flight UF-2. Since the MBS is an interface between the SSRMS, SPDM, ORUs, payloads, EVA, and the MT, the MT cannot transport anything until the MBS arrives. It functions both as a work platform and as a base for the arm.

The MBS has several important components. The MBS Computer Unit (MCU) has various functions, including providing control and monitoring, and performing failure management functions for MBS equipment. A device called the Payload/ORU Accommodation (POA) acts as a spare Latching End Effector (LEE) and provides power and a temporary storage location for payloads and ORUs. The MBS Common Attach System (MCAS) also provides a temporary storage location for payloads, including structural interfaces and power and data interfaces through the UMA on the MT. Another interface with the MT is provided by the MT Capture Latch (MTCL) which attaches the MBS onto the MT. There are four PDGFs to support attachment of the SSRMS and SPDM. Attach points are also provided for EVA. The Canadian Remote Power Control Modules (CRPCMs) distribute and switch power to the MBS equipment and attached payloads. These CRPCMs are not interchangeable with other Station RPCMs. The MBS is seen in Figure 8-8.

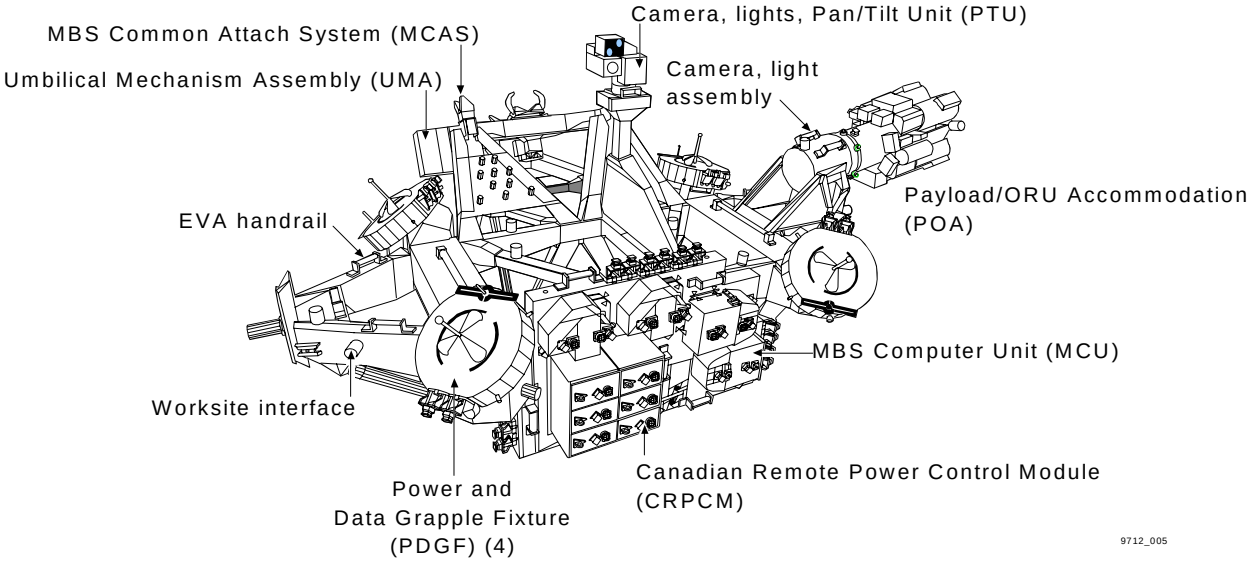

Figure 8-8. Mobile Remote Servicer Base System

Control of the MBS is also through the Robotic Workstation (RWS). No health status is available when the MBS is powered down. Similar to the rest of the MSS subsystems, the MBS has redundancy built in. Like the SSRMS, the MBS has dual electrical and electromechanical strings. It has a primary and redundant MBS Computer Unit (MCU) and three primary and three redundant CRPCMs.

8.4.1.5 *Special Purpose Dexterous Manipulator*

The Special Purpose Dexterous Manipulator (SPDM), shown in Figure 8-9, is the final component of the MSS to arrive at the ISS on Flight UF-4. It is composed of two 11.5-ft (3.5-m) seven-joint arms attached to a central single-joint body structure. These joints help to create the dexterity of this system.

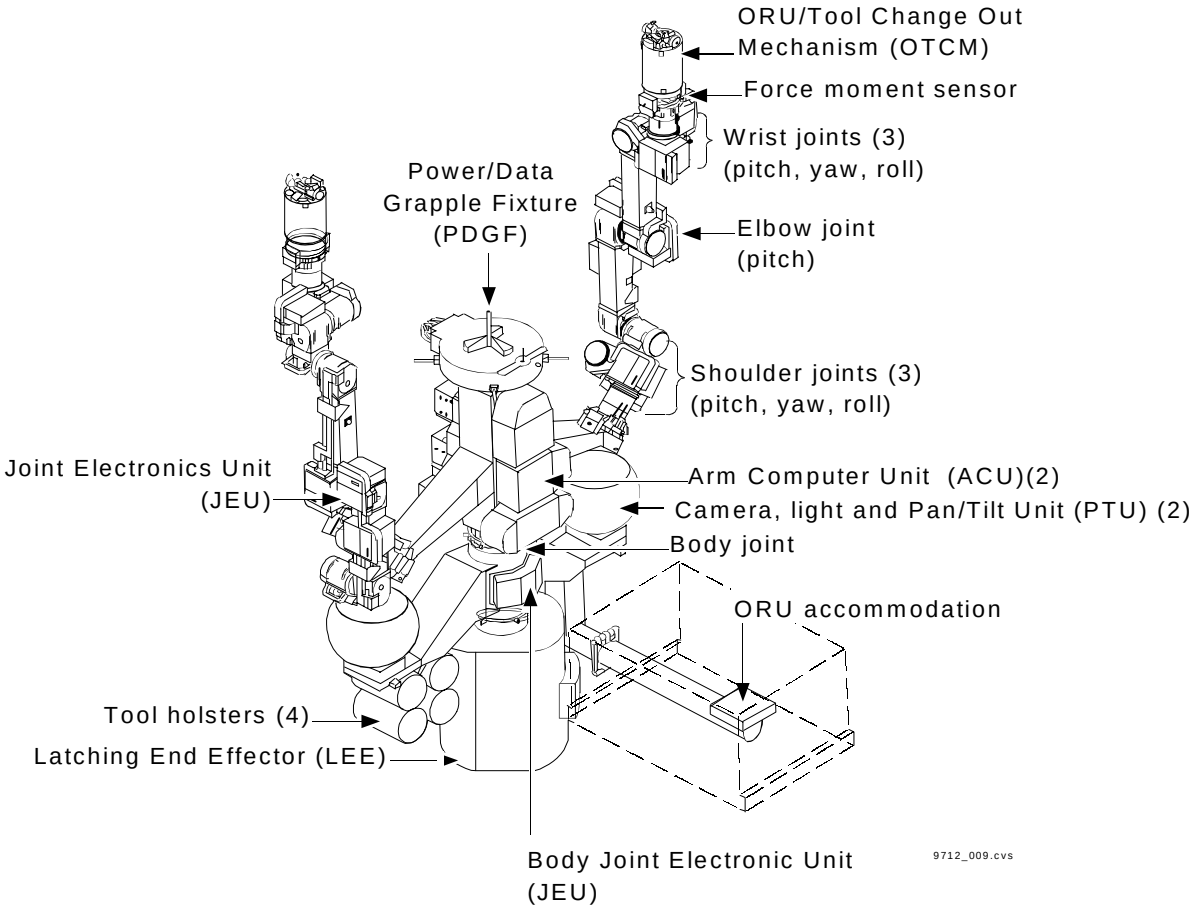

Figure 8-9. Special Purpose Dexterous Manipulator

Due to this manipulator's ability to execute dexterous operations, its primary function is to perform maintenance and payload servicing. The SPDM can remove and replace ORUs and ORU subcarriers, as well as inspect and monitor payloads and ORU equipment. It can provide lighting and Closed Circuit Television (CCTV) monitoring of work areas for EVA and Intravehicular Activity (IVA) crews. SPDM can assist EVA by transporting and positioning equipment. Control of this manipulator is provided through the RWS with control modes and features common to the SSRMS. Only one SPDM arm may be used at a time; the other arm can be used for stabilization at a worksite.

8.4.2 European Robotic Arm

Scheduled for launch on Flight 9A.1, the European Robotic Arm (ERA) is the second Robotics System to arrive on Station. ERA is being designed and built by the European Space Agency (ESA) for the Russian Space Agency (RSA) to use on the Russian segments. The ERA, shown in Figure 8-10, consists of two booms and seven joints that form a 36.7-ft (11.2-m) symmetric manipulator arm.

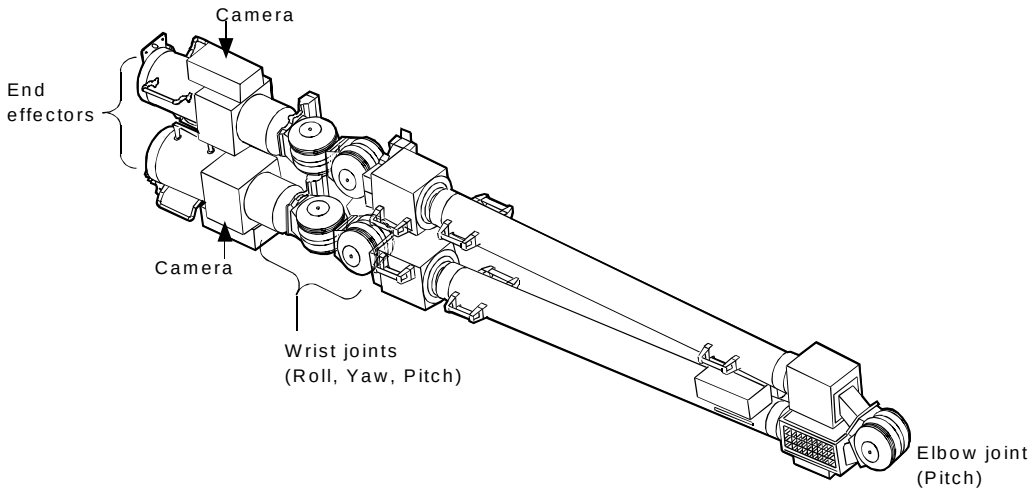

Figure 8-10. European Robotic Arm

The ERA has similarities to the SSRMS, including the power, data, and video transfer capability by the end effectors, plus the ability for either end effector to act as a basepoint while the other does payload handling. The ERA Basic End Effector (BEE), displayed in Figure 8-11, is a latch and tool end effector that provides mechanical torque, as well as electrical power to a payload.

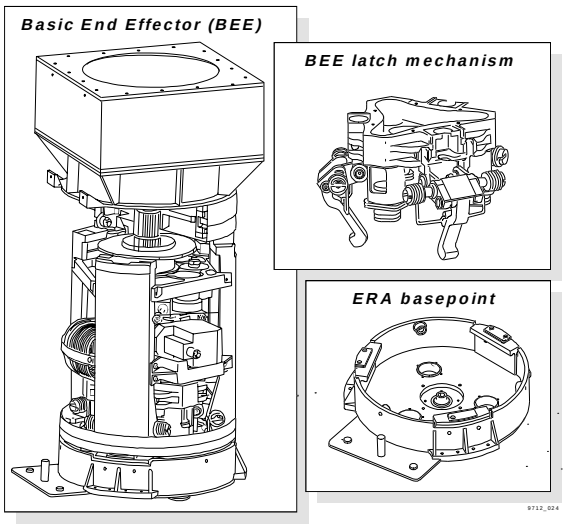

Figure 8-11. Basic End Effector (left); BEE latch mechanism and European Robotic Arm basepoint (right)

Furthermore, ERA's end effectors attach only to grapple fixtures specifically designed for them. These grapple fixtures or basepoints, shown in Figure 8-11, can only be used by ERA. They are located throughout the Russian structures and on certain payloads.

The primary functions of ERA are maintenance and support for EVA on the Russian Segment, with some assembly tasks, including the installation of the SPP solar arrays. ERA is also responsible for maintenance of SPP solar arrays, deployment of radiators, installation and replacement of ORUs, and inspection of external elements. Control during these operations is either through an EVA Man-Machine Interface (EMMI), when the operator is EVA, or through an IVA Man-Machine Interface (IMMI), when the operator is inside the Service Module. Both Man-Machine Interfaces are illustrated in Figures 8-12. Unlike the SSRMS, there are no hand controllers, thus, there is no manual augmented mode for ERA. Control is primarily through an autotrajectory mode, but single-joint and single degree-of-freedom are available.

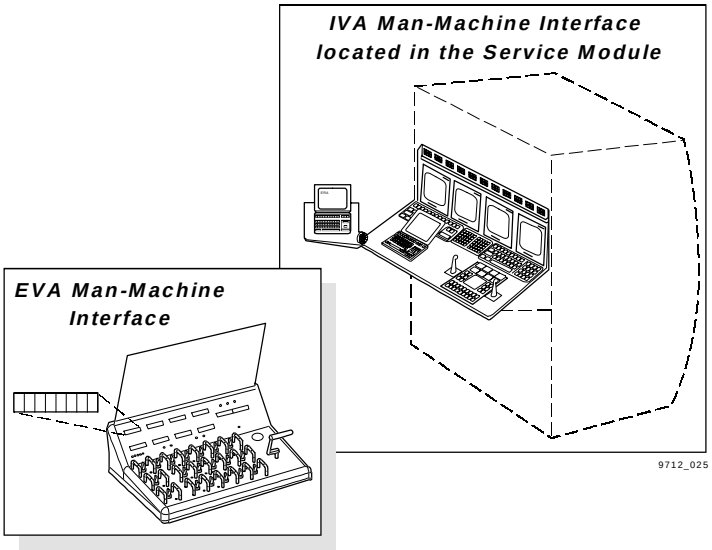

Figure 8-12. EVA Man-Machine Interface and IVA Man-Machine Interface

8.4.3 Japanese Experiment Module Remote Manipulator System

The two previously discussed Robotics Systems have many similarities. The JEM Remote Manipulator System (JEMRMS) also has some characteristics in common with the other two systems, but it has several unique attributes as well. Figure 8-13 shows the Main Arm (MA) and the Small Fine Arm (SFA) of the JEMRMS working together over the Exposed Facility (EF). The RMS Console arrives on Flight 1 J/A, the MA on Flight 1J, and the SFA on Flight 2 J/A.

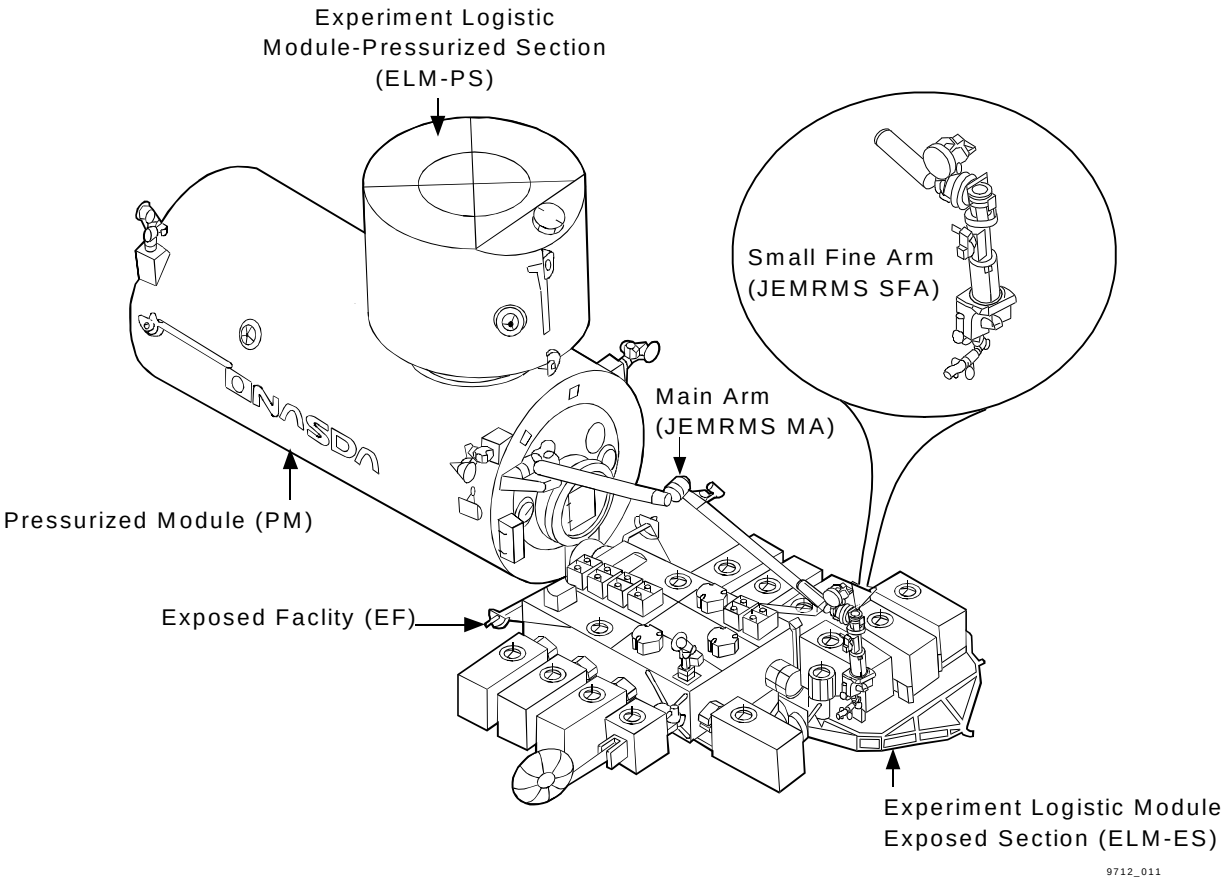

Figure 8-13. Overview of the Japanese Experiment Module Remote Manipulator System

The MA, seen in Figure 8-14 with its end effector and grapple fixture, is a 32.5-ft (10-m) six-joint robotic arm with two main booms. At the end of one boom is a snare end effector (similar to the Shuttle Remote Manipulator System (SRMS)) and at the end of the other boom is a fixed base that keeps the arm from having the "walking" capability of the other two systems. Like the other two types of end effectors, this snare end effector attaches to grapple fixtures. The JEMRMS grapple fixture is similar in appearance to the FRGF but has a connection that provides power, data, and video from the JEMRMS to payloads and SFA.

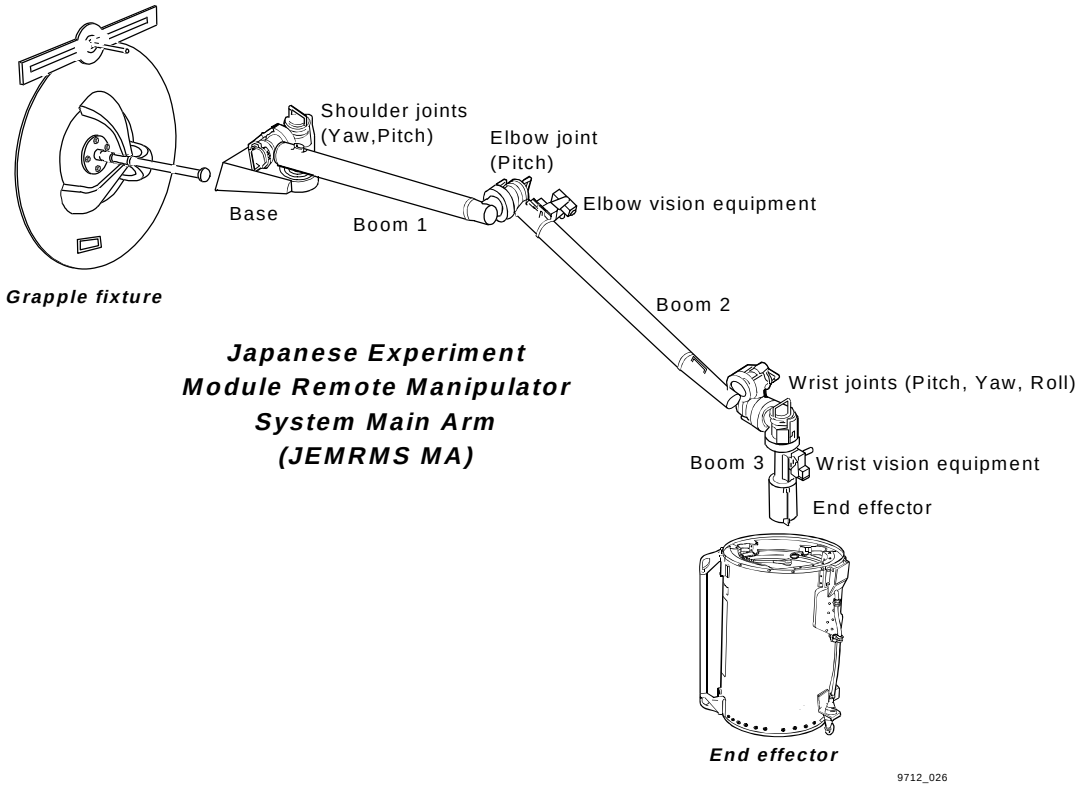

Figure 8-14. Japanese Experiment Module Remote Manipulator System Main Arm, end effector and grapple fixture

The SFA is a 6-ft (2-m) dexterous manipulator, consisting of six joints, two booms, and an end effector mechanism or "tool". The SFA, shown in Figure 8-15, operates from and is relocated by the MA. Unlike the SPDM, which can operate separated from the larger arm, the SFA must remain attached to operate.

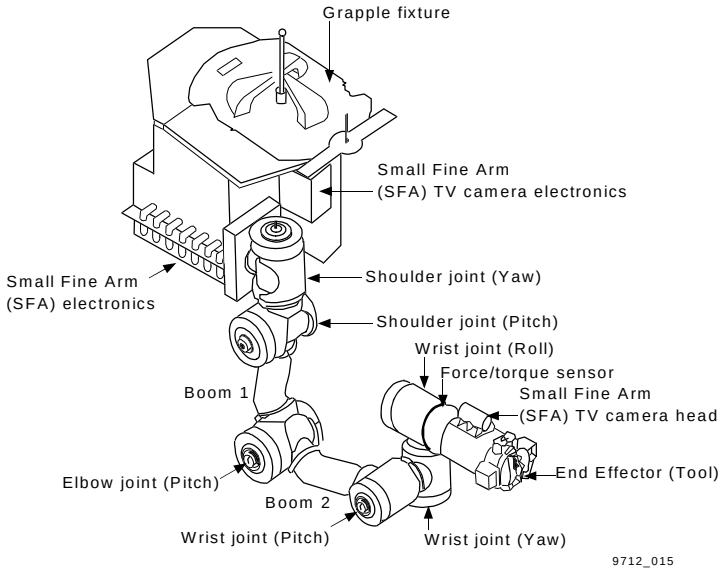

Figure 8-15. Small Fine Arm

The primary function of the JEMRMS MA is to handle the EF payloads, while the SFA supports more fine-tuned tasks, including interacting with ORUs and experiments on the EF. The JEMRMS Console, seen in Figure 8-16, is located inside the JEM Pressurized Module (PM) and provides manual augmented, autotrajectory, and single-joint modes, like the Robotic Workstation (RWS). Control of the MA is primarily done using autotrajectory mode, while manual augmented mode (hand controllers) is mainly used for SFA.

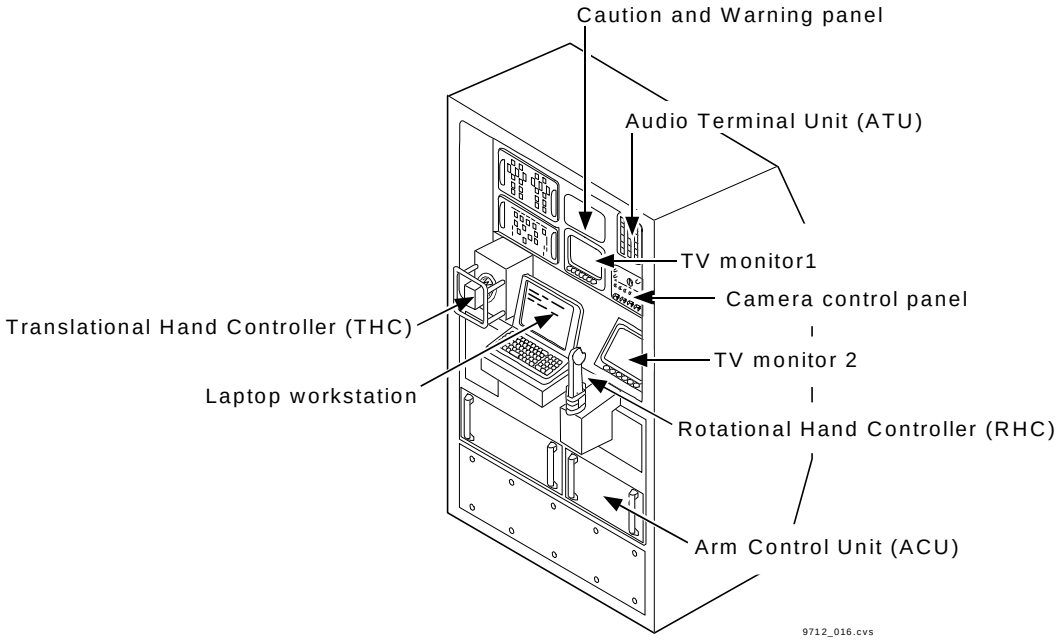

Figure 8-16. Japanese Experiment Module Remote Manipulator System Console (located in JEM Pressurized Module)

8.5 System Relationships

Table 8-1 compares the three Robotics Systems and their roles on the ISS. There are many similar and distinct characteristics in design and function among the three Robotics Systems. Many areas are being developed to have as much commonality as possible to improve communication, efficiency, and training. Some examples include common terminology, nomenclature, coordinate systems, display formats, and panel layouts. Since the crewmembers may be trained to use any Robotics System, commonality may decrease the training requirements for specific systems. Because of the differences that exist among the systems, ground control support is unique for each system. NASA/CSA ground control is responsible for the MSS, RSA is responsible for ERA, and NASDA for the JEMRMS.

Table 8-1. Overview of ISS Robotics Systems

	MSS	ERA	JEMRMS
Large arm	SSRMS	ERA	MA
Small arm	SPDM	None	SFA
Transporter	MT/MBS	None	None
Operator control	RWS	EMMI, IMMI	RMS console
Prime function(s)	ISS assembly, maintenance, and EVA support	RS maintenance and EVA support	Experiment handling

8.6 Summary

From this section, an understanding is gained of what kind of tasks each Robotics System performs and how they perform them, what kind of control system is used, and what the system capabilities are. Table 8-2 summarizes the different Robotics Systems/Subsystems, who is responsible for each, what flight each is on, and the different prime functions. It is important to remember that to accomplish required robotics tasks, the Robotics Systems need the coordinated help of other Station systems, including GNC, C&T, Electrical Power System (EPS), Command and Data Handling (C&DH), as well as the crew and the ground.

Table 8-2. Summary of Robotics Systems and Subsystems

Robotic component	International partner	Flight	Prime function(s)
SSRMS	CSA	6A	Assembly, maintenance payload handling, and EVA support
RWS	NASA	6A	Operator interface to SSRMS, MBS, and SPDM
MT	NASA	8A	Transportation of MBS, SSRMS, SPDM, EVA, payloads, and ORUs
MBS	CSA	UF-2	Work platform and an interface to MT
ERA	ESA (RSA)	9A.1	Maintenance and EVA support
JEMRMS MA	NASDA	IJ	Handle EF payloads
SPDM	CSA	UF-4	Maintenance and payload servicing
JEMRMS SFA	NASDA	2J/A	Interact with ORUs and experiments on EF

Questions

1. Match the Robotics Systems and Subsystems with the correct developing agency.

____	a.	Small Fine Arm (SFA)	1. CSA
____	b.	Mobile Transporter (MT)	2. ESA
____	c.	European Robotic Arm (ERA)	3. NASA
____	d.	Space Station Remote Manipulator System (SSRMS)	4. NASDA

2. Match the Robotics Systems with the correct prime function.

____	a.	European Robotic Arm (ERA)	1. ISS assembly
____	b.	Mobile Servicing System (MSS)	2. Russian Segment maintenance
____	c.	JEM Remote Manipulator System (JEMRMS)	3. Handle Exposed Facility (EF) payloads

3. Which of the following Robotics Systems does NOT use hand controllers?

   a. European Robotic Arm (ERA)

   b. Mobile Servicing System (MSS)

   c. JEM Remote Manipulator System (JEMRMS)

4. Once the Mobile Transporter (MT) arrives on Flight 8A, the Space Station Remote Manipulator System (SSRMS) can be transported on the MT.

   a. True

   b. False

Section 9
Structures and Mechanisms Overview

9.1 Introduction

When you see a picture of the International Space Station (ISS), what you see are the structures and mechanisms. The structures protect the crew from the environment of space and allow them to work within the ISS without space suits. Mechanisms connect the structures together.

Most flights during International Space Station (ISS) assembly involve the process of incorporating an additional structure, operating a mechanism, or both. This section introduces the structures and mechanisms used on Space Station up to and including assembly Flight 8A.

9.2 Objectives

After completing this section, you should be able to:

- Given an 8A external view diagram of the ISS, identify the various elements, truss segments, and mechanisms that make up the ISS
- Identify primary structures
- Describe function, purpose, and design philosophy for secondary structures
- Describe how the U.S. Micro-Meteoroid Orbital Debris Shields work and compare U.S. and Russian segment shielding
- Describe the function and purpose for each attachment mechanism.

9.3 Structures

Structures protect the crew from the harsh environment of space. Structures transfer loads and provide support for the various systems. Loads are the mechanical, pressure, vibration, inertial, and thermal forces applied to structural elements. The structures on ISS are made with aluminum alloys which are the preferred metal for aerospace applications. They are lightweight, corrosion resistant, and have favorable electrical conductivity which aids in grounding electrical systems. There are two main types of structures on ISS: pressurized elements and truss assemblies.

9.3.1 Pressurized Elements

Pressurized elements, such as nodes and labs, not only protect the crew from the space environment, but they also provide a work and living environment. Pressurized structures are classified as either primary or secondary. Structures that are designed to maintain the structural integrity of a pressurized element are called primary structures. Structures that are not designed

to maintain the structural integrity of a pressurized element, but are designed to transfer their loads to a primary structure, are called secondary structures.

9.3.1.1 *Primary*

Primary structures maintain the structural integrity of a pressurized element. Examples of these structures are ring frames, longeron-stiffened pressure shells, windows, and integrated trunnions. All of these examples, except windows, are shown in the diagram of a pressurized element in Figure 9-1. The typical design for most pressurized elements consists of a ring frame with longerons and shell panels. The longerons are used to increase the stiffness and load-carrying capability of the shell panels, while the shell panels form the module walls. The ring frame provides the attachment points for the longerons and the shell panels. The integrated trunnions are used to hold pressurized elements in the Shuttle payload bay for transportation to space. The trunnions lock into the payload retention latches of the Shuttle. There are a number of windows on the Russian segment, however, there are only a few windows for the U.S. segment. By Flight 8A, the U.S. Lab will have one window and a couple of hatches will also have windows.

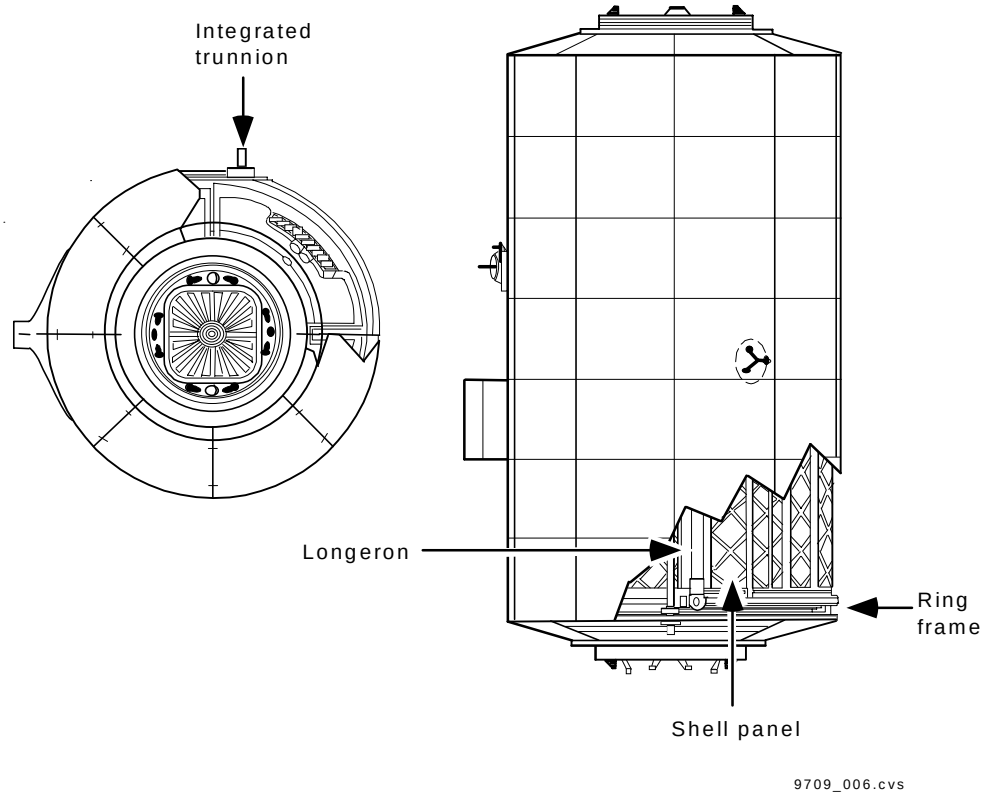

Figure 9-1. Primary structures on a typical module

Figure 9-2 is a diagram of the Station configuration just after Flight 8A. Pressurized elements are labeled on the diagram. The truss structures in the diagram are discussed later in this document.

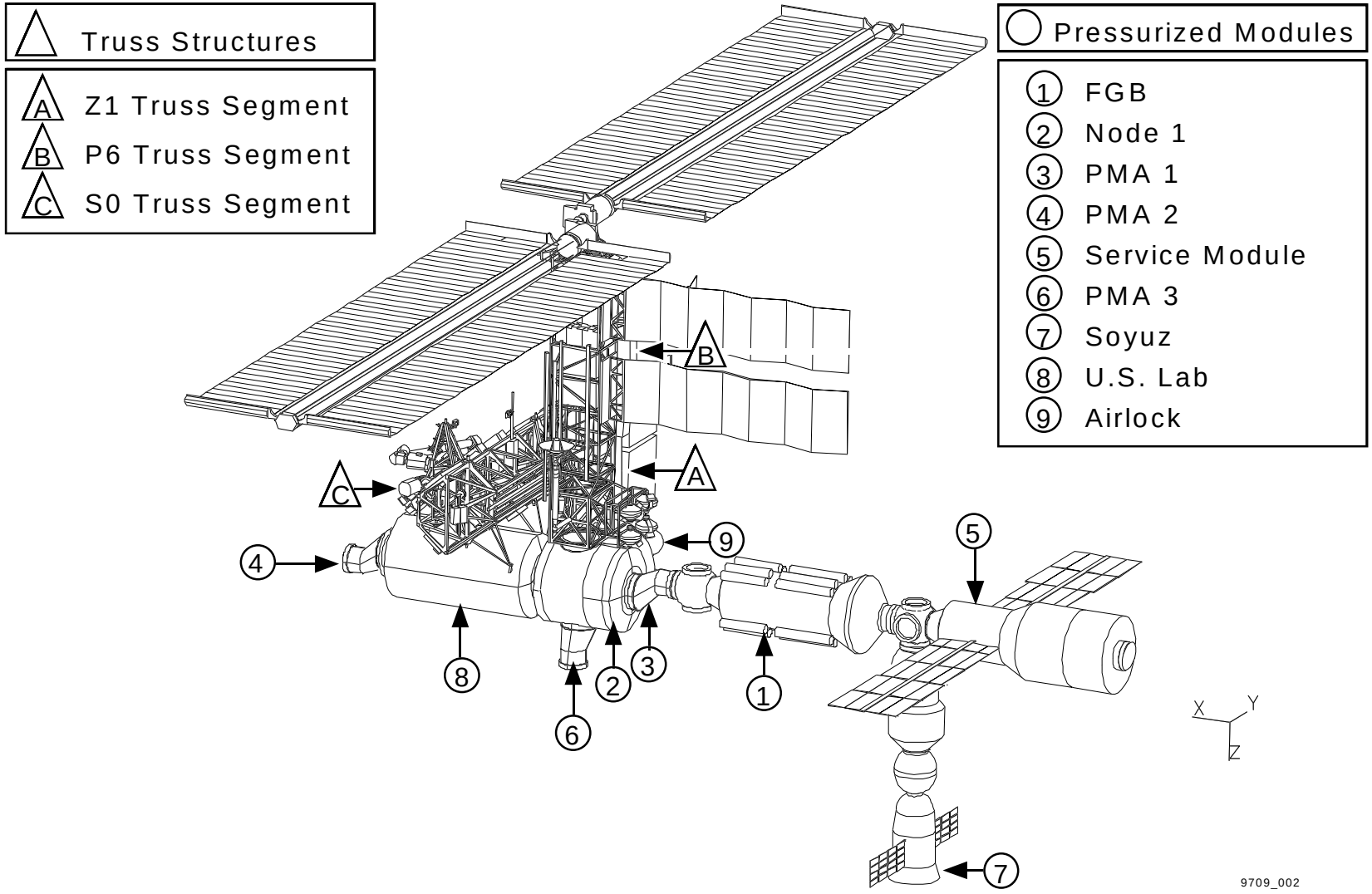

Figure 9-2. The 8A configuration of ISS

9.3.1.2 *Secondary*

Secondary structures transfer their loads to a primary structure. The secondary structures include crew and payload translation aids, equipment support, and debris shielding. Secondary structures exist both internal and external (Figure 9-3) to the primary structures. Standoffs and racks are examples of internal secondary structures. Standoffs provide the attachment points for racks and a passageway for electric and thermal cabling. Racks are the storage area for electrical equipment, sensors, and experiments.

There are a variety of hatches designed for use on the International Space Station. Hatches are integrated with the docking mechanisms used for mating the modules. Because of this fact, hatches will operate differently with whatever berthing system they are associated with. A Probe-Drogue attachment system will have a different hatch than an Androgynous Peripheral Attach System (APAS). The U.S. Common Hatch is another type of hatch and is associated with the Common Berthing Mechanism (CBM).

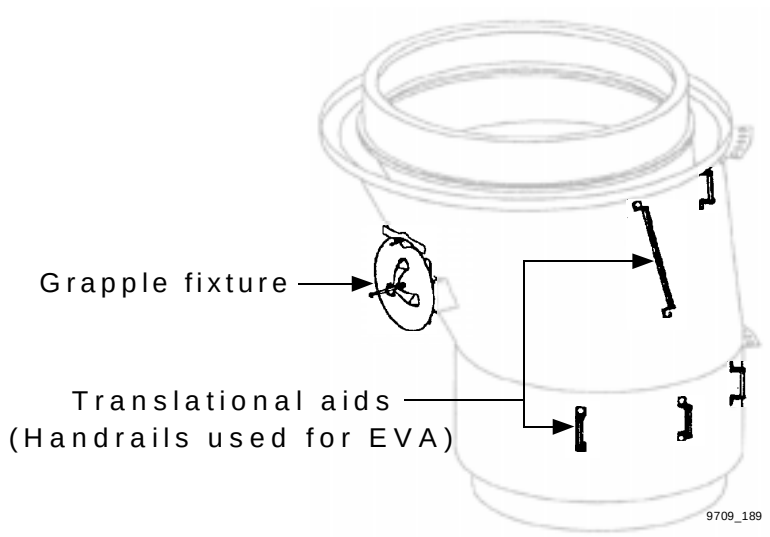

Figure 9-3. External secondary structures

Examples of external secondary structures include crew translational aids, grapple fixtures, window shutters, and Micro-Meteoroid Orbital Debris (MM/OD) shielding. Translational aids are used by Extravehicular Activity (EVA) crew to move around a work site (see Figure 9-3).

The grapple fixtures are used by the robotic arms to install, capture and move elements. The Micro-Meteoroid Orbital Debris (MM/OD) shields protect the crew modules, pressure vessels, and other critical components from orbital debris.

The MM/OD shielding on Station is passive and has no moving parts. The MM/OD shielding on the U.S.-developed segments consists of a 1.27 mm (.05 in.) thick sheet of aluminum separated from the pressure shell by a 101.6-mm (4-in.) gap. The debris shielding shocks the orbital debris and breaks it into small fragments creating a debris cloud. The debris cloud spreads the energy of the impact over a much larger area causing much less damage.

MM/OD shielding is provided for windows by the use of window shutters. The design philosophy behind the Russian micro-meteoroid debris shield is significantly different from the U.S. system. The two systems are compared in Figure 9-4.

MM/OD shielding is an important component to Station structures and crew safety while in orbit. There are 20,000 objects greater than 50 mm (1.97 in.) in low Earth orbit. Because of the MM/OD design, the chance one of these objects penetrating a U.S. pressurized element is 7.5 percent, and 5 percent for a Russian pressurized element.

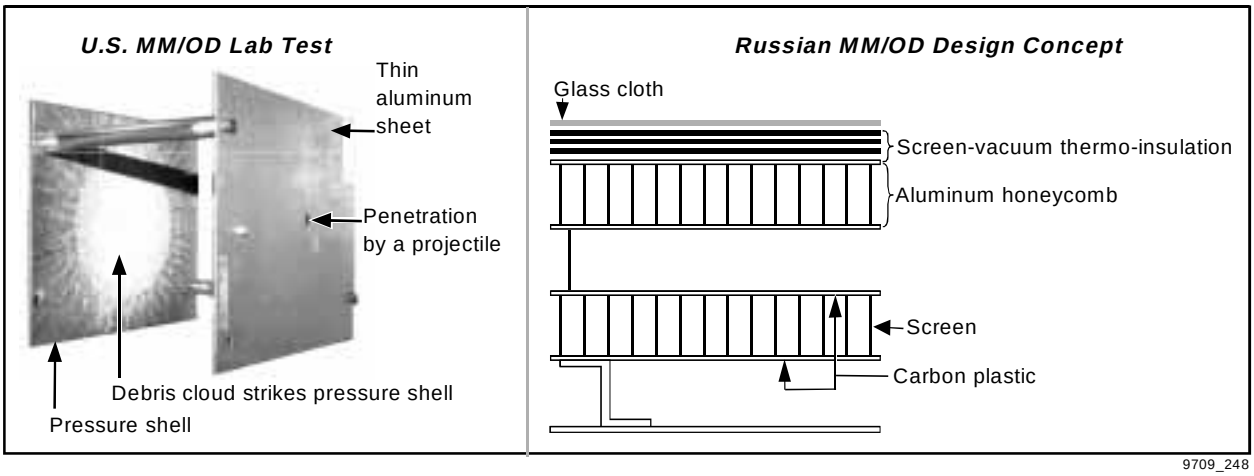

Figure 9-4. Comparison of U.S. and Russian MM/OD systems

9.3.2 Truss Assemblies

The truss assemblies provide the structural backbone of the Station and attachment points for external payloads. Truss assemblies also contain electrical and cooling utility lines, and the mobile transporter rails. The Integrated Truss Structure (ITS) is made up of ten individual segments. These segments, which are shown in Figure 9-5, will be installed on Station so that they extend symmetrically from the center of Station.

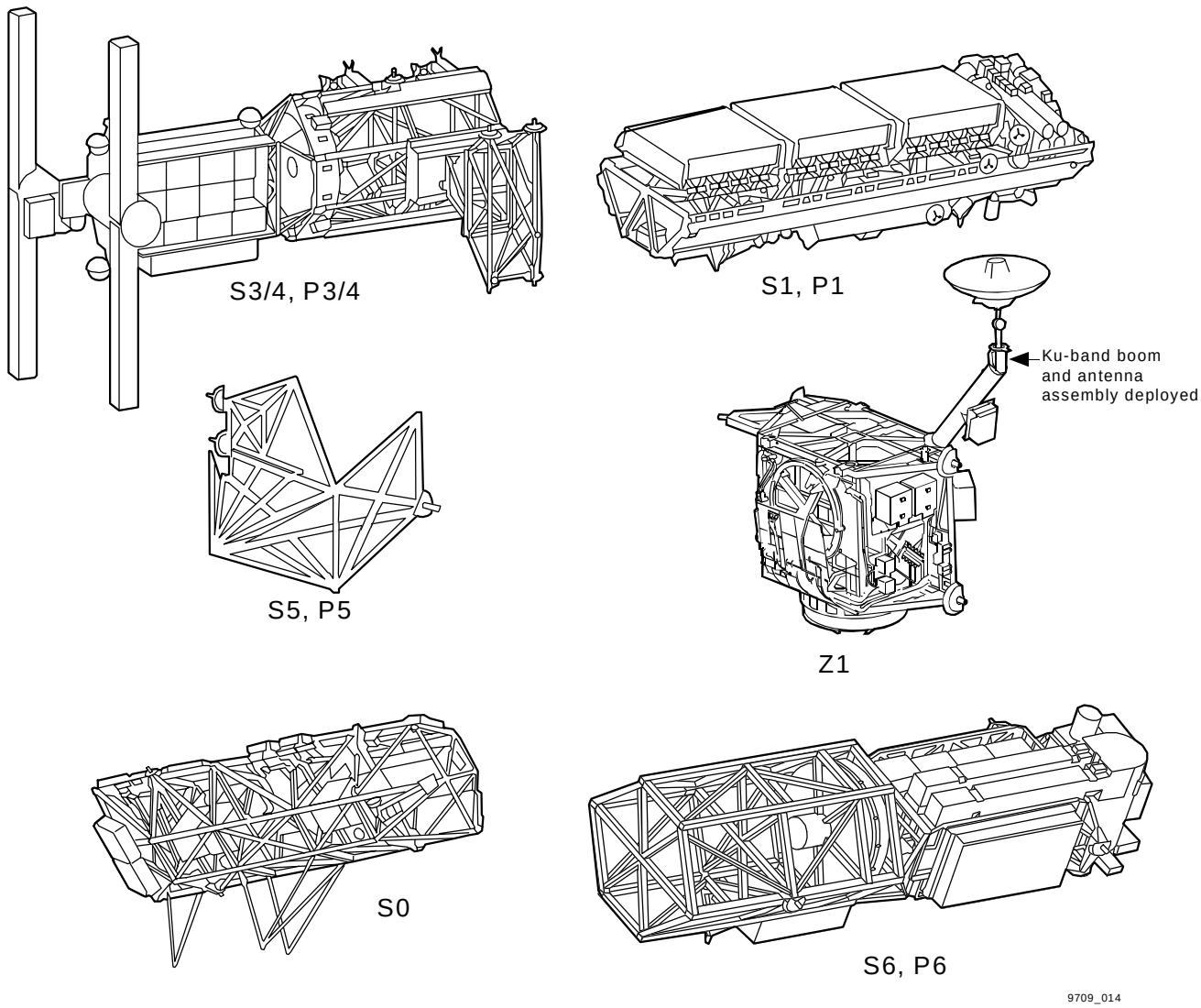

Figure 9-5. Integrated truss segments

At full assembly the truss reaches 100 meters (328 feet) in length. ITS segments are labeled in accordance with their location. P stands for port and S stands for starboard. The only truss segments present at 8A are S0, which is attached to the Lab; Z1, which is attached to Node 1; and P6, which is attached to Z1. Figure 9-2 shows the Station 8A configuration and truss locations.

The Science Power Platform (SPP) is the truss for the Russian segment and is located on the zenith side of the Service Module. Eight meters (25.76 feet) in length, it has radiators, solar arrays, the capability for pressurized storage, and the capability to support the European Robotic Arm (ERA). The SPP is also equipped with thrusters to aid the Service Module with control moments along the roll axis. The Science Power Platform (SPP) is made up of two segments, labeled SPP-1 and SPP-2 (Figure 9-6).

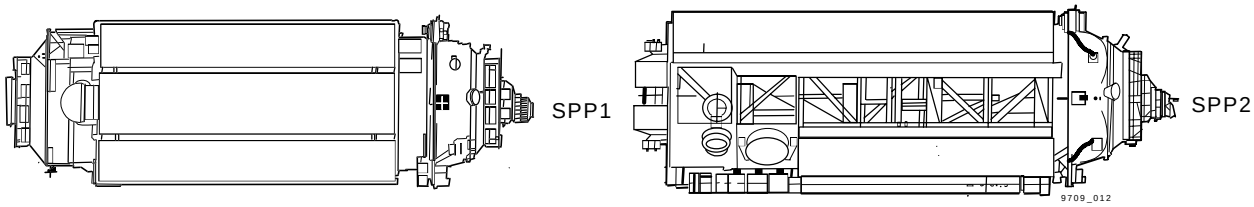

Figure 9-6. Science Power Platform

The SPP-1 segment is attached to the Service Module and contains the pressurized volume. The SPP-2 is attached to SPP-1 and contains the radiators, solar arrays, thrusters, and the European Robotic Arm (ERA).

9.4 Mechanisms

Mechanisms are used to connect structures together, allow the orbiter to dock to Station, and provide temporary attachments for payloads. Mechanisms generally include capture equipment and enough structure to withstand loading forces. There are a variety of mechanisms on Station. This variety is due to differing purposes, locations, and design requirements from participating countries. Some mechanisms accommodate Shuttle-to-Station docking, while others are used for module-to-module and truss-to-truss docking. Some mechanisms, such as the Common Berthing Mechanism (CBM) have the capability to be reused and will be relocated several times during Station assembly. Other mechanisms, such as the Lab Cradle Assembly will not be moved once installed, and thus is only used once. At 8A configuration, there is at least one example of every type of mechanism except for the Common Attach System (CAS).

9.4.1 Common Berthing Mechanism/Manual Berthing Mechanism

The Common Berthing Mechanism (CBM) connects one pressurized module to another pressurized module on the U.S. segment. The CBM has an active and a passive half (Figure 9-7).

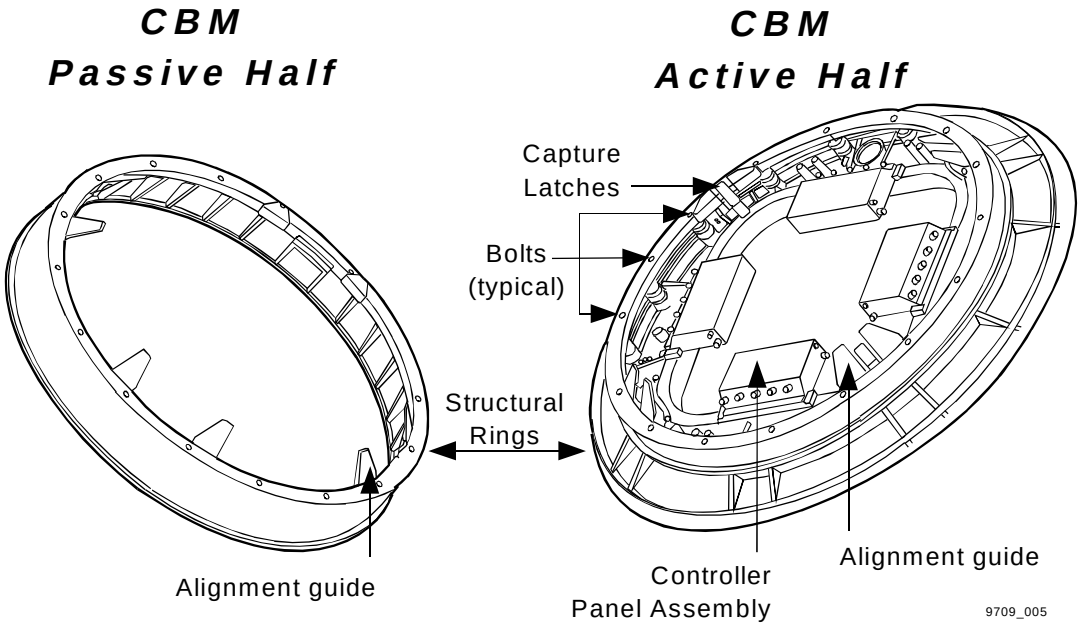

Figure 9-7. Common Berthing Mechanism

The active half contains a structural ring, capture latches, alignment guides, powered bolts, and controller panel assemblies. Only the active half of the CBM is connected to power and data. The passive half has a structural ring, capture latch fittings, alignment guides, and nuts. During the installation of a module that uses CBM, a robotic arm moves the module with the passive half into the capture envelope of the active half. Following this, the latching process begins. .Similar to the CBM active half is the Manual Berthing Mechanism (MBM). The MBM serves as a temporary attachment point and is located on the Z1 truss segment. The MBM is manually operated by an EVA crew person and can be mated with any passive CBM.

9.4.2 Lab Cradle Assembly

The Lab Cradle Assembly (LCA) attaches the S0 truss to the U.S. Lab. The LCA has an active and a passive half. The active half, shown in Figure 9-8, contains a capture latch and alignment guides, while the passive half contains a capture bar and alignment bars.

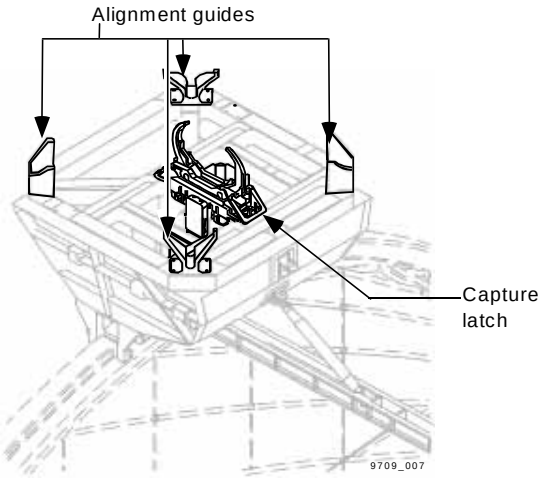

Figure 9-8. Lab Cradle Assembly active half

The LCA is attached to the ring frame and longerons of the U.S. Lab. EVA-driven bolts and support braces support the LCA and S0 truss.

9.4.3 Segment-to-Segment Attach System/Rocketdyne Truss Attach System

The segments of the Integrated Truss Structure (ITS) are attached using the Segment-to-Segment Attach System (SSAS) or the Rocketdyne Truss Attach System (RTAS) (Figure 9-9).

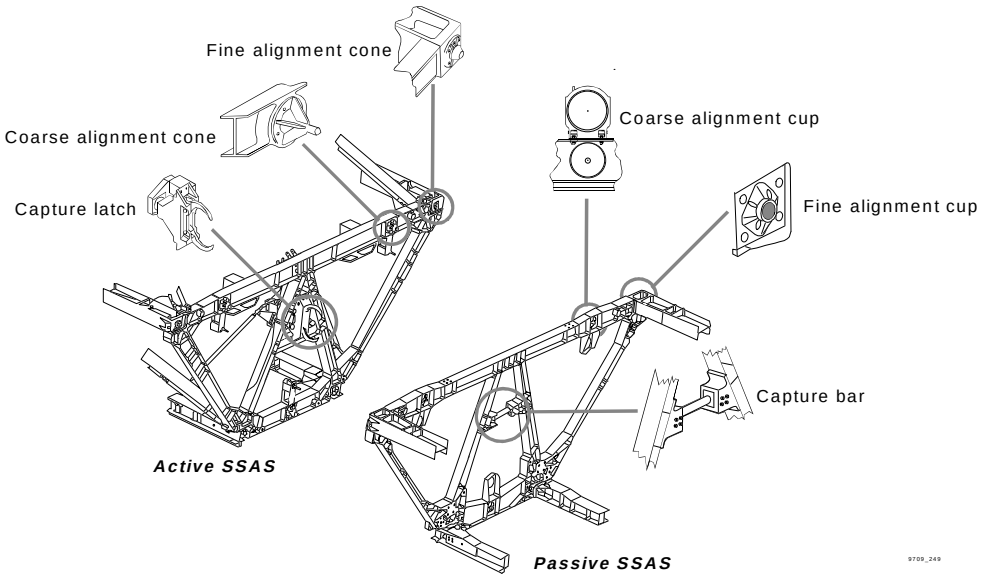

Figure 9-9. Segment-to-Segment Attach System

SSAS is the attachment mechanism for S3/4, S1, S0, P1, and P3/4 truss segments. RTAS is the attachment mechanism for S5, S6, P5, and the P6 truss segments. Each truss either has an SSAS or an RTAS mechanism attached to it. The SSAS has an active and a passive half. The active half contains motorized bolts, coarse alignment pins, fine alignment cones, and a capture latch. The passive half contains nuts, coarse and fine alignment cups, and a capture bar. The RTAS is similar to the SSAS except it does not have the motorized components. Instead, the capture latch and all of the bolts are manually driven by EVA crew.

9.4.4 Common Attach System

The Common Attach System (CAS) is designed to attach exposed payloads and logistics carriers to the truss (Figure 9-10). There are two types of CAS, each one identical to the other. The two Unpressurized Logistics Carrier Attach Systems (ULCASs) remotely capture and structurally attaches unpressurized cargo carrier platforms to the P3 Integrated Truss Structure. The four Payload Attach Systems (PASs) remotely capture and structurally attach payloads to the S3 Integrated Truss Structure. The CAS attaches to the truss's longerons and contains a capture latch and guide vanes. Payloads placed into the CAS are equipped with a capture bar and guide pins for alignment. CAS has not been manifested to be installed on flights prior to 8A.

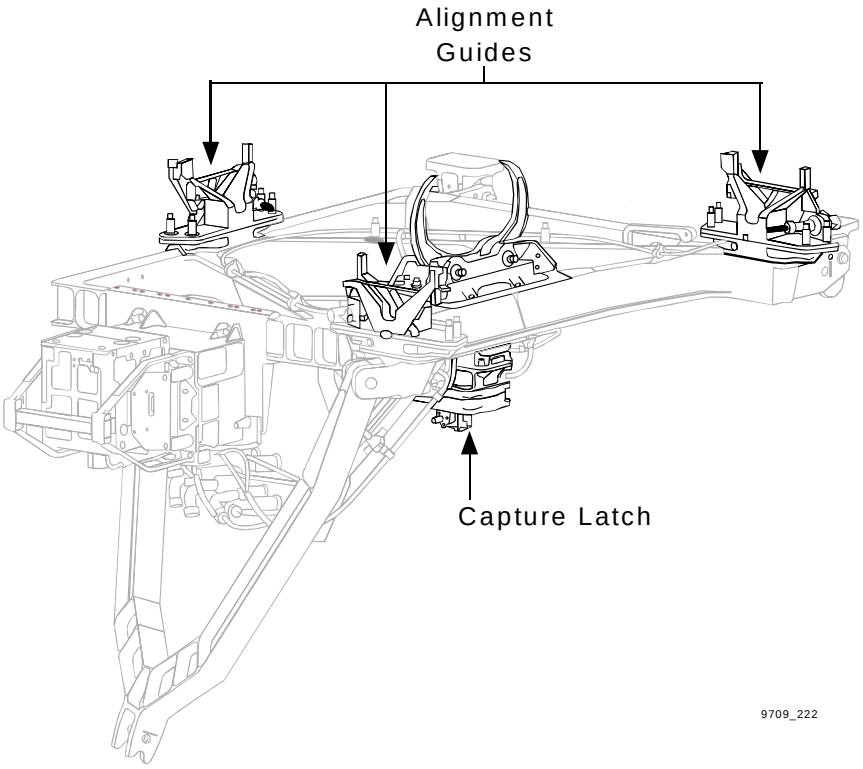

Figure 9-10. Common Attach System

9.4.5 Androgynous Peripheral Attach System

The Androgynous Peripheral Attach System (APAS) serves two functions on Station. One is to dock the orbiter and the other is to connect the Functional Cargo Block (FGB) to Pressurized

Mating Adapter 1 (PMA 1). An APAS is located on each of the three PMAs and on the FGB forward side. The components of the APAS (Figure 9-11) are a structural ring, a movable ring, alignment guides, latches, hooks, dampers, and fixers.

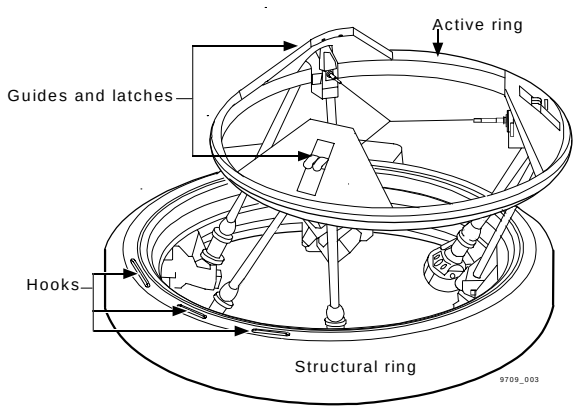

Figure 9-11. Androgynous Peripheral Attach System

The APAS is a Russian design and is designed to mate with an exact copy of itself (hence the name androgynous). Each APAS can act as the passive half or the active half. The APAS was also used on the Shuttle/Mir flights and was referred to as the Androgynous Peripheral Docking System.

9.4.6 Probe/Drogue Docking System/Hybrid Docking System

The Probe/Drogue or Hybrid docking systems are used to mate all Russian modules together including the Science Power Platform (SPP) segments (post 8A). This system has an active half and a passive half (Figure 9-12).

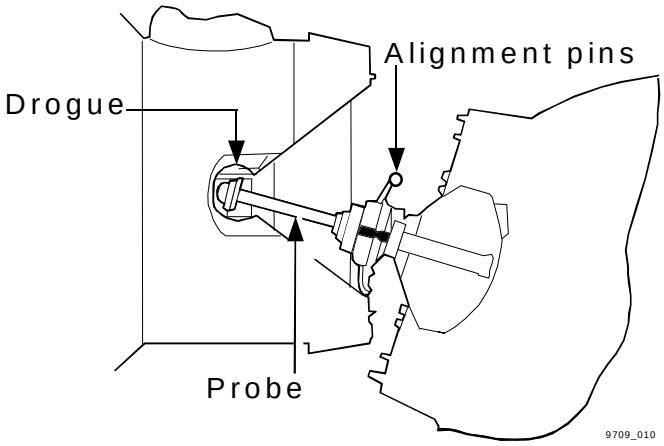

Figure 9-12. Probe/drogue docking system

The active half has a probe, a capture latch at the tip of the probe, alignment pins, hooks, and shock absorbers. The passive half has a drogue, a receiving cone, and a structural ring. The probe enters the receiving cone and the capture latch activates as the tip of the probe enters the drogue. The shock absorbers damp out the relative motion, then the probe retracts bringing the

two halves together. Next, the hooks mate the two halves and the capture latch is released so the crew can open the hatch.

The Hybrid Docking System has a larger diameter hatch, a larger structural ring, and more hooks than the regular probe/drogue. This type of design results in a more robust structure capable of handling loads larger than what Probe/Drogue was designed to handle. The Hybrid Docking System is used in areas where increased forces on the joints between docked objects, such as the SPP-to-Service Module connection, are expected. The larger hatch also permits larger cargo to pass through the hatch.

9.5 Summary

This section provides an overview of the Structures and Mechanisms that are found on the ISS. Structures are important because they protect the crew and provide support for equipment and payloads. The key structures, present at the 8A configuration, are shown in Figure 9-2. Mechanisms are also important because they attach the structures together and allow vehicles to dock with the Station. The functions of each mechanism are shown in Table 9-1 below.

Table 9-1. Mechanisms and their functions

Mechanism	Function
CBM	Connects modules together on the forward half of Station
MBM	Temporary attachment for non-pressurized elements containing a passive CBM
LCA	Connects integrated truss to Lab
SSAS	Connects integrated truss segments together
RTAS	Connects integrated truss segments together
CAS	Connects exposed payloads and logistics carriers to the truss
APAS	Mates FGB and PMA 1 together and docks orbiter to Station
Probe/Drogue Docking System	Connects Russian modules together on the aft half of Station
Hybrid Docking Assembly	Connects Russian modules together on the aft half of Station

Questions

1. Which of the following structural connections will **not** apply to the Space Station configuration at 8A?

   a. PMA 2 to the U.S. Lab

   b. PMA 1 to the FGB

   c. U.S. Lab to the PMA 1

   d. Z1 Truss segment to Node 1

2. Which of the following structures is **not** a primary structure?

   a. Micro-Meteoroid Orbital Debris Shield

   b. Integrated trunnions

   c. Longeron-stiffened pressure shell

   d. Windows

3. Pressurized elements are categorized as primary or secondary structures by which of the following criteria?

   a. By the materials they are made of

   b. By their location on Station

   c. By their ability to maintain structural integrity

   d. By their impact to the safety of the crew on Station

4. If debris hits a Station module, the Micro-Meteoroid Orbital Debris (MM/OD) will

   a. Make the debris be repelled due to the shield bouncing back in the other direction.

   b. Make the debris break up into small fragments and create a debris cloud.

   c. Absorb the shock and allow the debris to be imbedded in the shield.

   d. Vaporize the impacting debris and a sensor will be activated to sound an alarm to alert the crew.

5. Identify the following mechanisms with their functions.

1. Probe/Drogue and Hybrid	a) Used to mate one pressurized module to another on the U.S.-developed side of the Station
2. CAS	b) Used to attach the Integrated Truss Structure segments together.
3. CBM and MBM	c) Used to attach the S0 truss assembly to the U.S. Lab.
4. LCA	d) Used to dock the Orbiter or the FGB to a Pressurized Mating Adapter.
5. SSAS and RTAS	e) Used to attach exposed payload and logistics carriers to the truss.
6. APAS	f) Used to mate all Russian modules together including some SPP segments.

Section 10
Payloads Overview

10.1 Introduction

The purpose of the ISS is to provide a permanent manned laboratory for conducting science, research and technology development in space.

The principal advantages for conducting research on Station are the access to the microgravity environment, the unique vantage point provided by low Earth orbit, and the extended periods of time to perform the experiments. An additional advantage offered by the Station is the opportunity to repeat or modify the experiments based on current results.

This segment presents an overview of the types of research the ISS Program has planned for Station, identifies their potential benefits, highlights the major payloads facilities and provides definitions of important ISS Payload components.

10.2 Objectives

After completing this section, the student should be able to:

- Describe the research disciplines planned for ISS
- Identify the benefits expected from each type of research
- Identify the general characteristics of important Payload components
- List the U.S. Facility Class Payloads for each type of research.

10.3 ISS Types of Research

NASA sponsors research in the following six disciplines:

- Life Sciences
- Microgravity Sciences
- Space Sciences
- Earth Sciences
- Commercial Product Development
- Engineering Research and Technology.

10.3.1 Life Sciences

Life sciences research conducted on the ISS focuses on critical physiological issues that affect crew health and performance in long duration space flight. Research on the cardiovascular system, cardiopulmonary system and musculoskeletal system, could lead to possible methods for treatments and prevention of numerous diseases and medical conditions experienced on Earth. ***The benefits expected from life sciences research include the improvement of medical treatments for diseases such as anemia, cancer, diabetes and osteoporosis.***

Scientists will also study how plants and animals adjust to the absence of gravity. The study of plants may lead to improved plant growth systems and conservation of soil, water, and energy.

10.3.2 Microgravity Sciences

In a microgravity environment scientists have a unique opportunity to study processes which are obscured by gravity on Earth (such as buoyancy-driven convection and sedimentation) and to test physical theories at levels of accuracy that are impossible on Earth. The ISS orbiting laboratory permits larger and longer duration experiments which allow more detailed observation. The specific disciplines of microgravity science which are studied aboard ISS include: materials science, combustion science, fluid physics, fundamental physics, and biotechnology. ***Some of the benefits which could result from microgravity research are:***

- ***Materials Science: better electronic devices and improved optical fibers for telecommunications***
- ***Combustion Science: enhanced energy efficiency and reduced pollution, improved processes for making high-technology materials, and advances in fire safety for space flight***
- ***Fluid Physics: improved materials processing, safe buildings in earthquake-prone areas and improved stability and performance for power generating stations***
- ***Fundamental Physics: advanced understanding of theories relevant to topics ranging from high-temperature superconductivity to weather prediction and mathematics***
- ***Biotechnology: more effective medicines with reduced side effects and improved knowledge of how tissues grow and develop in the body.***

10.3.3 Space Sciences

Space Sciences seek to solve the mysteries of the universe, explore the solar system, find planets around other stars, and search for life beyond Earth. Space sciences include studies on solar physics, cosmic physics, astronomy, and astrophysics.

ISS provides scientists with multispectral observations of near and deep space. Prospective subjects for observation include the Sun, planets, comets, asteroids, and the galaxies and nebulae beyond our solar system. Scientists can also expose experiments to atomic oxygen, solar

ultraviolet radiation, electron and proton radiation, as well as conduct searches for extraterrestrial anti-matter.

Possible commercial and scientific benefits are a better understanding of solar interaction with Earth's environment and improved ability to predict solar activity.

10.3.4 Earth Sciences

The main goal of Earth sciences research is to understand the Earth's system and the environmental response to natural and human-induced variations in atmospheric quality, regional and global climate, geologic activity, land use, food production and ocean and fresh water health.

Through a better understanding of the causes of global changes, policy makers will be able to find solutions to potential large scale environmental problems. Using the information gathered by measurements from space and models constructed from this data, policy makers will be able to make the critical decisions to ensure the long term quality of our environment.

Earth sciences use the Station as a platform for conducting multispectral observations of Earth's land, oceans, and atmosphere. The Station's 51-degree orbital inclination provides a ground-track which covers over 75 percent of the Earth's surface, containing 95 percent of Earth's human population. Various accommodations are provided for Earth sciences research, from externally attached payload sites to a laboratory research window. The crew can reconfigure experimental equipment in response to monitoring cataclysmic events such as earthquakes, volcanic eruptions, and hurricanes.

10.3.5 Commercial Product Development

The commercial product development program was established to increase private sector interest and involvement in commercial space-related activities. The goal of this program is to stimulate interest in promising areas of space research and development with commercial applications. The knowledge gained from this space research to create new products and processes, gain economic competitive advantages, create new jobs and improve the quality of life. This program is implemented by Commercial Space Centers. They combine the participation of industry, universities, and other non-government organizations to develop specific commercial programs.

10.3.6 Engineering Research and Technology

The Station's microgravity environment provides the opportunity for institutions and industry to exercise tests and demonstrations associated with the advancement of technology and engineering research. Some of the specific areas that will be investigated through the Engineering Research and Technology discipline are: advanced energy storage systems, advanced robotics capabilities, communication systems, electromagnetic propulsion and advanced sensors.

Results from these efforts are planned to contribute toward the development and testing of Space Station upgrades, improved materials and designs for advanced NASA programs and

support for U.S. industries in the development of materials and products with commercial potential. Using prototype hardware in space provides an opportunity to evaluate the potential operations, reliability and maintenance characteristics of candidate systems before program commitment.

10.4 ISS Payloads Components

Payload operations on ISS are supported by a wide variety of programs, equipment and laboratory modules. The following significant payload components are defined:

- U.S. Laboratory
- Facility Class Payloads
- Laboratory Support Equipment (LSE)
- Attached Payloads
- Centrifuge Accommodation Module (CAM)
- Japanese Experiment Module (JEM)
- Columbus Orbital Facility (COF)
- Russian Research Modules.

10.4.1 U.S. Laboratory

The U.S. Laboratory is a pressurized module designed to accommodate pressurized payloads (see Figure 10-1). ***This module has a capacity for 24 rack locations. Payload racks will occupy 13 locations especially designed to support experiments (see Figure 10-2).*** Each of the payload rack locations provides the standard ISS Payload rack support structure and interfaces for Payload rack installation and retention. At each of the Payload rack locations in the U.S. Laboratory, there are interfaces for ISS-provided utilities and resources to which the Payload can be connected.

Figure 10-1. U.S. Laboratory module

Payload racks installed in the U.S. Laboratory will be transported to the ISS by the Shuttle as cargo integrated into the Mini-Pressurized Logistics Module (MPLM) and transferred to the U.S. Laboratory during joint Shuttle/Station operations.

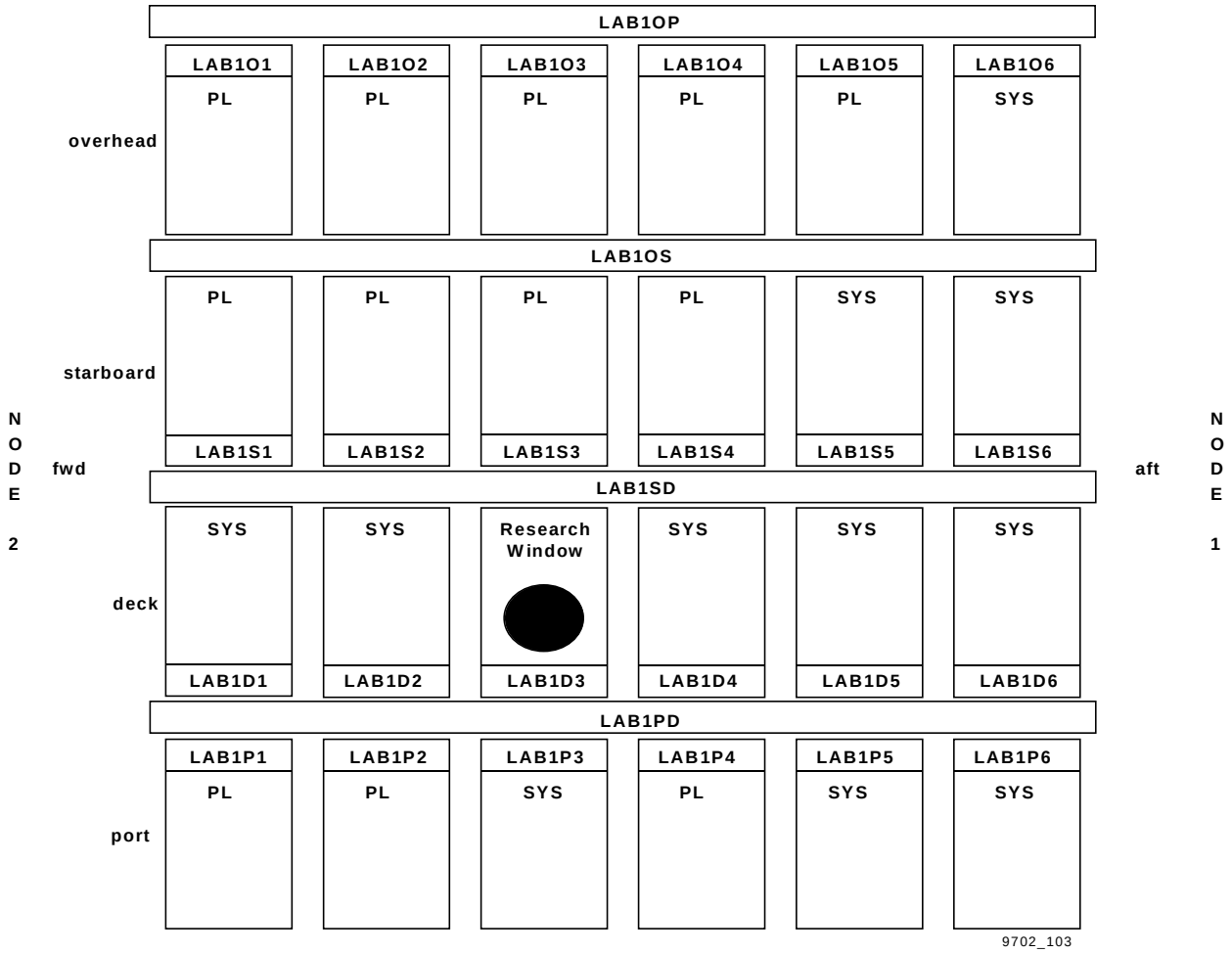

Figure 10-2. U.S. Lab topology

10.4.2 Facility Class Payloads

A Facility Class Payload is a long-term or permanent Station resident that provides services and accommodations for experiments in a particular science discipline. Facility Class Payloads will occupy International Standard Payload Racks (ISPRs). ***The ISPR provides the basic housing and support structure for the mounting of payload hardware and equipment that are to be installed in the U.S. Lab and International Partners (IP) modules.*** More detail on the ISPR is provided in Section 2 of the Payloads Operations and Interface Manual.

Facility Class Payloads are designed to allow easy changeout of experiments by the crew and to accommodate varied experiments. This easy changeout is accomplished via the Expedite the Process of Experiments to Space Station (EXPRESS) Rack. ***The EXPRESS Rack provides payload accommodations which allow quick, simple integration by using standardized hardware interfaces.*** More detail on EXPRESS is provided in Section 2 of the Payloads

Operations and Interface Manual. The services provided to the experiments include physical support interfaces, command and control, data/video handling and control/distribution of Station resources.

Some of the U.S.-developed facility class payloads are described below.

10.4.2.1 *Human Research Facility*

The Human Research Facility (HRF) (Figure 10-3) is the major facility housing Human Life Sciences payloads. ***HRF is a two-rack facility developed by NASA Lyndon B. Johnson Space Center (JSC) and is designed to support life sciences investigations using human subjects.*** Human Life Sciences payloads support monitoring of crew physiology and performance and helps to identify mechanisms for human adaptation to space. This data provides information to develop countermeasures necessitated by long duration space flights.

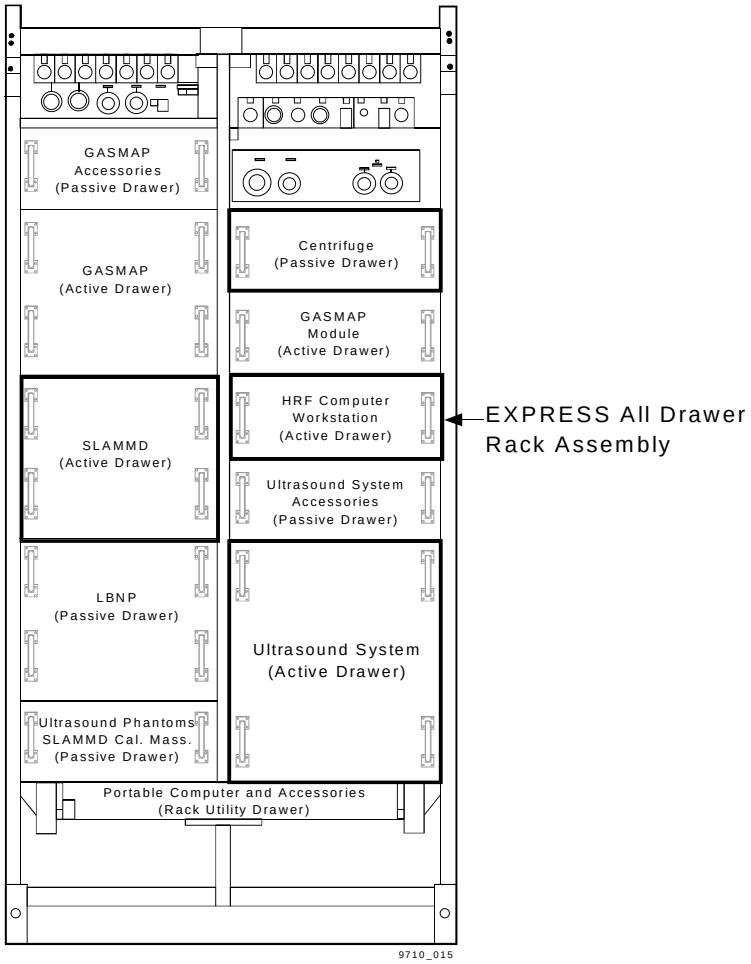

Figure 10-3. Human Research Facility Rack 1

10.4.2.2 *Advanced Human Support Technology*

Advanced Human Support Technology (AHST) Payloads use a single modified EXPRESS Rack. AHST rack is a Life Science Facility Class Payload. AHST payloads are divided in three major categories:

- ***Space Human Factors Engineering (SHFE) is designed to integrate knowledge about human capabilities and system engineering methodologies into space craft design, mission planning, and related ground operations.***
- ***Advanced Life Support was initiated to develop regenerative life support systems directed at NASA's future long-duration missions.*** Such missions, which can last from months to years, make re-supply impractical and necessitate self-sufficiency. Biological processes must be developed to fully recycle air and water, recover resources from solid wastes, grow plants for food, control the thermal environment, and control the overall system.
- ***Advanced Environmental Monitoring and Control Payloads support the development of advanced technologies, which monitor the physical environment and life support systems of space craft and extravehicular systems, for application in the commercial sector.***

10.4.2.3 *Materials Science Research Facility*

Materials Science Research Facility (MSRF) helps to conduct investigations that deal with the properties of matter and how they relate to each other. The properties to be investigated are structure (arrangement of the atoms or molecules), thermal, magnetic, chemical, and processing of materials (how the material is created).

The MSRF is in the developmental phase. An early design concept for the facility (see Figure 10-4) includes:

- A Core Rack providing support services such as control functions, command processing, data and video collection/storage/distribution and resource interfaces
- Two instrument racks distribute core services and house experiment modules which contain various furnaces, providing for specimen installation and changeout

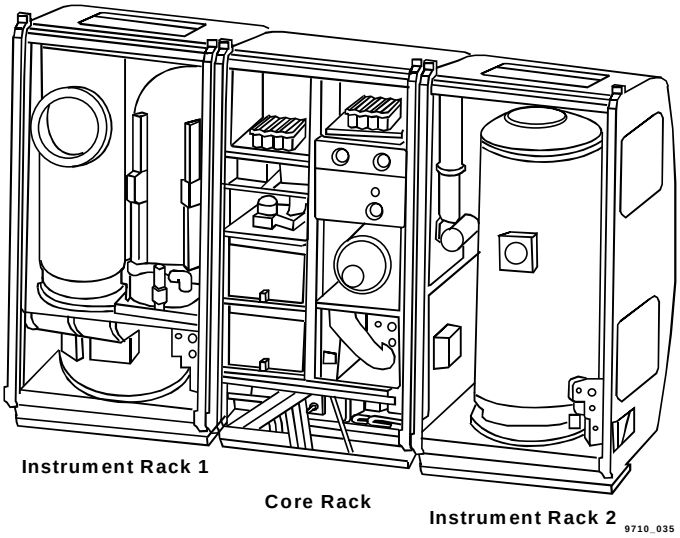

Figure 10-4. Early design for Materials Science Research Facility design

10.4.2.4 *Microgravity Science Glovebox*

The Microgravity Science Glovebox (MSG) (Figure 10-5) developed by the European Space Agency (ESA) under NASA contract, occupies a complete ISPR located in the U.S. Lab.

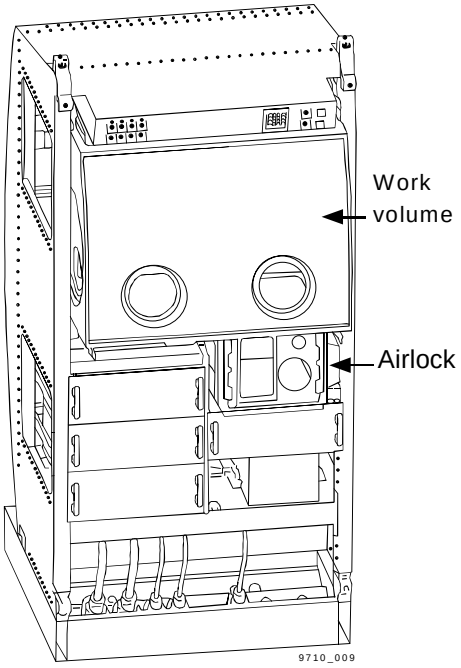

Figure 10-5. Microgravity Science Glovebox

The MSG is a multi-user facility that enables users to conduct small science and technology investigations in fluid physics, combustion science, materials science, biotechnology, and space processing. MSG core work volume slides out of the rack, to provide additional crew access capability from the side ports.

10.4.2.5 *Fluids and Combustion Facility*

Fluids and Combustion Payloads, managed by NASA Lewis Research Center, occupy a combined facility, the Fluids and Combustion Facility (FCF) (Figure 10-6). ***The FCF payloads use low gravity to study the properties and behavior of fluids (liquids, gases and mixtures), and fundamental combustion phenomena.***

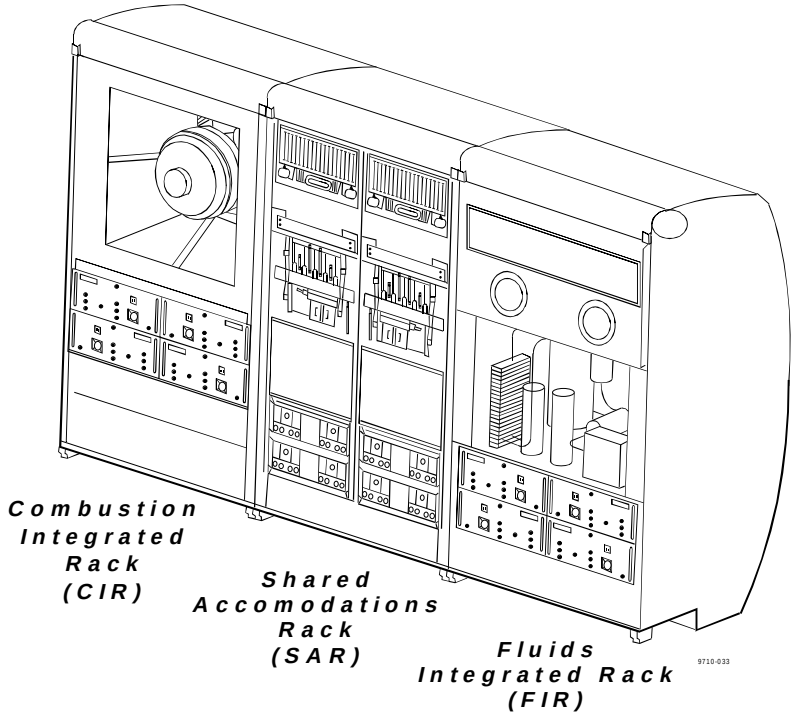

Figure 10-6. Fluids and Combustion Facility

The FCF is a three-rack facility that includes:

- Combustion Integrated Rack (CIR) - the first FCF rack to be launched, features an optics plate, a combustion chamber, replaceable diagnostics, and an integrated gas mixing assembly
- Fluids Integrated Rack (FIR) - provides capabilities for illuminating fluid samples, digital imaging systems, capability for thermal control, and capability for control of automatic cameras and positioners
- Shared Accommodations Rack (SAR) - provides common support services including command processing, data and video collection/storage and distribution.

10.4.2.6 *Biotechnology Facility*

Biotechnology Facility (BTF) supports a variety of payloads that focus on cell cultures, tissue engineering, protein crystal growth, biochemical separations, and micro-carrier and micro-capsule preparation. BTF is a one rack facility with seven separate interchangeable middeck locker experiment modules (Figure 10-7). BTF supports each experiment module with power conditioning and distribution; four different research grade gases (oxygen, nitrogen, carbon dioxide and argon); experiment computer control; and video signal processing.

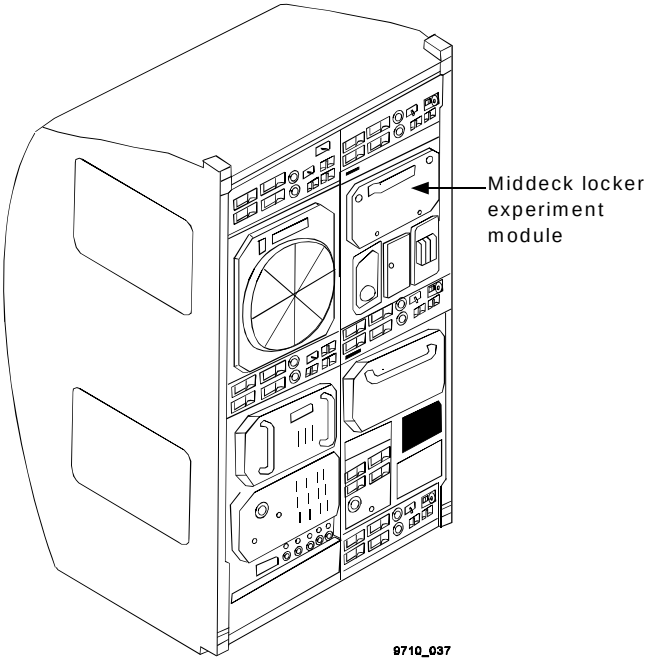

Figure 10-7. Biotechnology Facility

10.4.2.7 *Window Observational Research Facility*

The Window Observational Research Facility (WORF) (see Figure 10-8) provides a crew workstation at the U.S. Laboratory window to support research-quality optical Earth observations. Some of these observations include rare and transitory Earth surface and atmospheric phenomena.

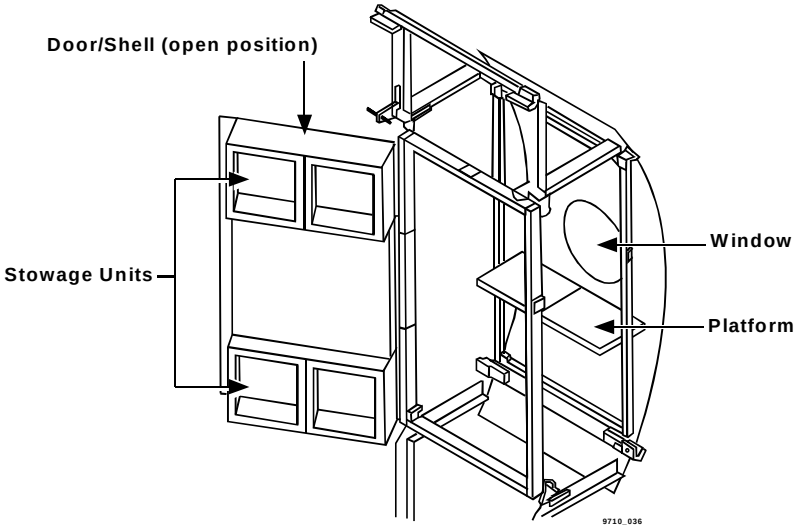

Figure 10-8. Window Observational Research Facility conceptual design

10.4.2.8 *X-ray Crystallography Facility*

X-ray Crystallography Facility (XCF) (Figure 10-9) is composed of two racks designed to support crystal growth, harvesting, mounting, and x-ray diffraction data collection. XCF uses proprietary data command processing, including a complete robotic system integrated into the unit to support crew-controlled operations or ground-controlled robotic operations for crystal mounting.

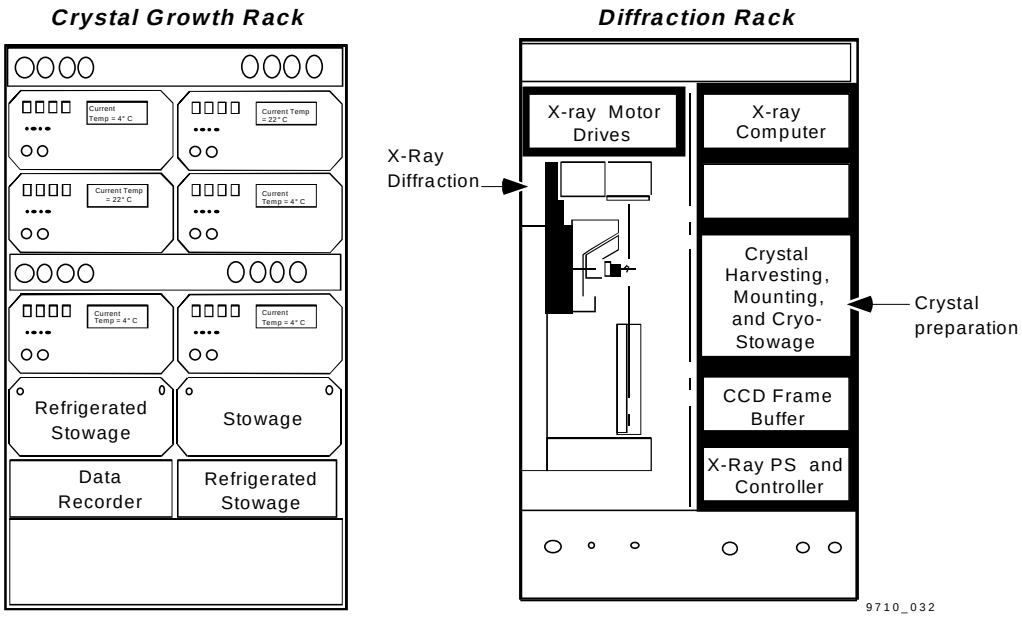

Figure 10-9. X-ray Crystallography Facility

10.4.3 Laboratory Support Equipment

Laboratory Support Equipment (LSE) are devices that are shared on a noninterference basis by multiple research users. LSE vary in size and complexity from a simple thermometer to a full-size ISPR containing a refrigerator/freezer (Figure 10-10).

In general, LSE fall into one of the following categories:

- Refrigerators and cryogenic freezers
- Microscopes
- Tools
- Instruments
- Cameras

10.4.3.1 *Minus Eighty degrees Celsius Laboratory Freezer for the ISS*

Minus Eighty degrees Celsius Laboratory Freezer for the ISS (MELFI) is provided by the European Space Agency (ESA) under NASA contract. It consists of three rotating flight units that provide cooling and storage of biological samples onboard and during ascent/descent to and from ISS. The four refrigerated sections, or dewers can be controlled independently by modulating the cold gas supply for the following temperatures: -80°C, -26°C, and +4°C.

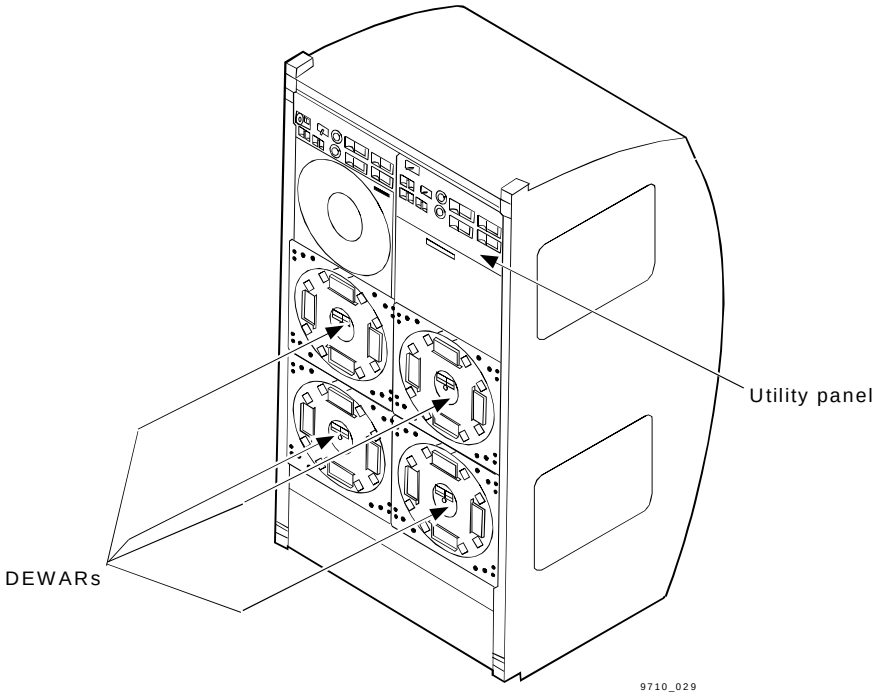

Figure 10-10. Refrigerator/freezer

10.4.4 Attached Payloads

Attached Payloads (Figure 10-11) are located outside of the pressurized volume of the Space Station on the truss or the Japanese

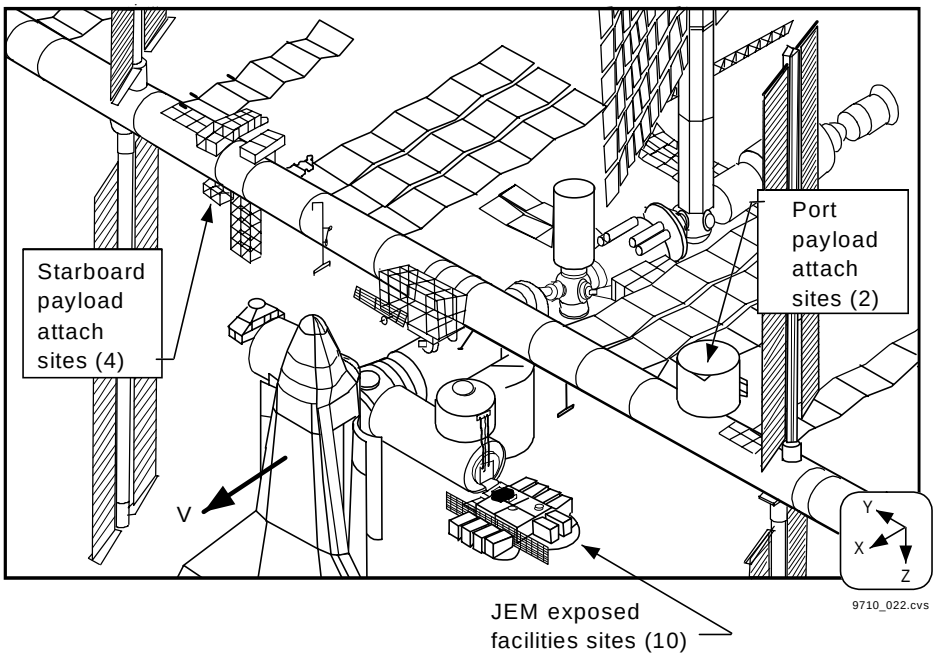

Figure 10-11. Attached payload sites

Experiment Module Exposed Facility (JEM EF). Four locations on the S3 truss segment, two locations on the P3 truss segment and ten locations on the JEM EF house attached payloads. Five of the locations on the JEM EF are allocated for National Space and Development Agency of Japan (NASDA) payloads and five for NASA payloads.

10.4.5 Centrifuge Accommodation Module

The Centrifuge Accommodation Module (CAM) (Figure 10-12) is a research facility especially designed to study the effects of selected gravity levels (0.01g-2g) on the structure and function of plants and animals, as well as to test potential countermeasures for the changes observed in microgravity.

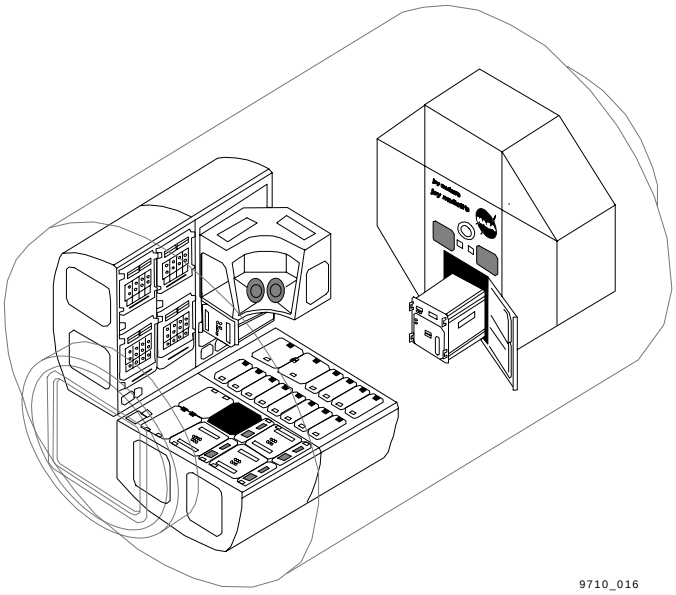

Figure 10-12. Centrifuge Accommodation Module

The module is being constructed by NASDA under NASA contract. It supports extended duration investigations, including multigeneration studies, and the opportunity to collect biological samples on-orbit in the microgravity environment. The CAM provides the same interface to ISS resources as the U.S. Lab.

This module accommodates the ***Space Station Biological Research Project (SSBRP) (Figure 10-13) managed by NASA Ames Research Center, focuses on payloads designed to study the role of gravity in the evolution, development, and functions of biological processes involving cells, plants, and animals.***

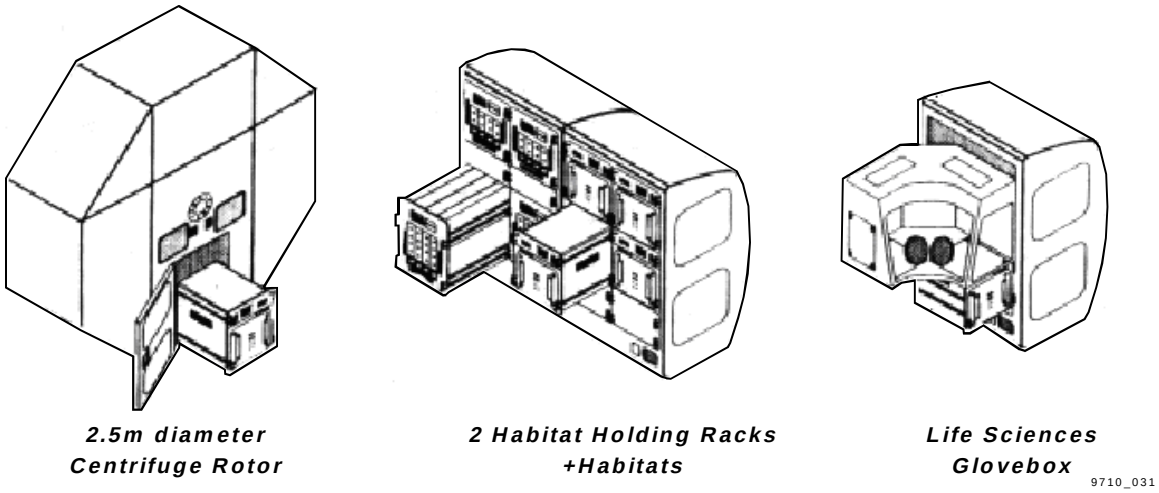

Figure 10-13. Space Station Biological Research Project

The SSBRP consists of:

- 2.5-meter diameter Centrifuge Rotor (CR) provides controlled, artificial gravity levels ranging from 0.01g to 2.0g.
- Life Sciences Glovebox (LSG) provides an enclosed work space for performing experiments and handling research organisms.

Habitat Holding Racks (HHRs) provide support to experiments via life support resources, electrical power, data links and other scientific equipment.

10.4.6 Japanese Experiment Module

The Japanese Experiment Module (JEM) (Figure 10-14), is provided by NASDA. ***The JEM Pressurized Module (JEM PM) has ten locations for ISPRs. Five of the payload locations are allocated to NASDA payloads and five to NASA payloads.*** The JEM PM provides the same interfaces to the Station resources as the U.S. Lab. In addition, the JEM PM has carbon dioxide, argon and helium gases and provides an airlock for changeout of samples or payloads on the exposed facility.

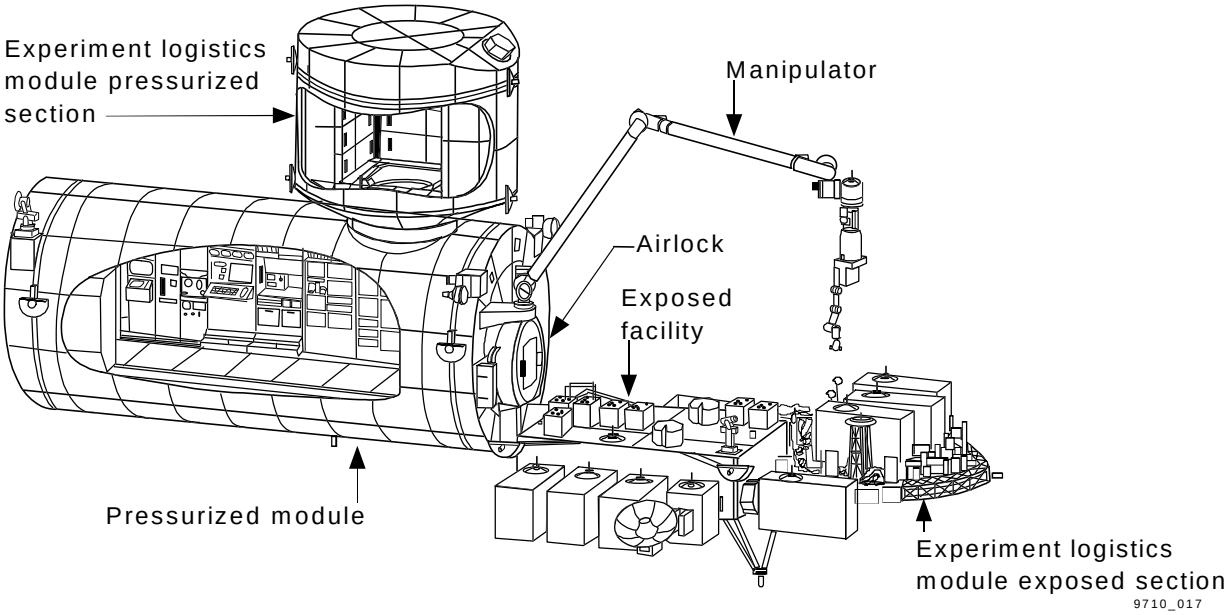

Figure 10-14. Japanese Experiment Module

The Japanese Experiment Module Exposed Facility (JEM EF) has five locations for NASDA attached payloads and five for NASA attached payloads. The JEM EF has a unique interface for active cooling of the attached payloads.

In addition, the Japanese Experiment Module includes the Experiment Logistics Module - Exposed Section (ELM ES) and the Experiment Logistics Module - Pressurized Section (ELM PS). The Experiment Logistics Module - Pressurized Section (ELM PS) will be used for initial transport of payload and logistics racks to the JEM PM. The Experiment Logistics Module - Exposed Section (ELM ES) will be used for initial transport of attached payloads to the JEM EF.

Some of the JEM multiuser facilities planned for ISS are as follows:

- Microgravity science
  - Gradient Heating Furnace (GHF)
  - Advanced Furnace for microgravity Experiment with X-ray radiography (AFEX)
  - Fluid Physics Experiment Facility (FPEF)

- Solution/Protein Crystal Growth Facility (SPCF)
- Electrostatic Levitation Furnace (ELF)
- Isothermal Furnace (ITF)

- Life science
  - Cell Biology Experiment Facility (CBEF)
  - Clean Bench (CB)
  - Aquatic Animal Experiment Facility (AAEF)

10.4.7 Columbus Orbital Facility

The Columbus Orbital Facility (COF) also called Attached Pressurized Module (APM) (Figure 10-15) is the major European Space Agency (ESA) contribution to the ISS. The COF is used primarily for research and experimentation in microgravity conditions for material sciences, fluid physics, and life science. ***The COF accommodates ten ISPR locations: five allocated to NASA utilization and five are to ESA utilization.*** The COF provides the same interfaces to ISS resources as the U.S. Lab.

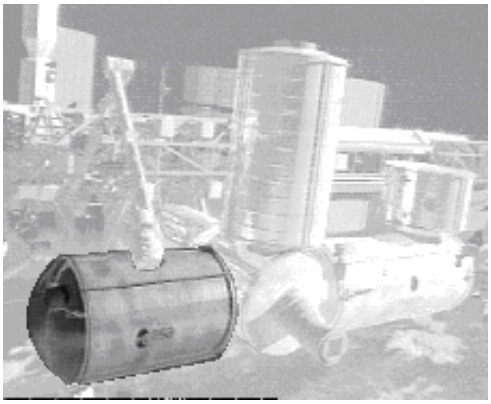

Figure 10-15. Columbus Orbital Facility

Some of the ESA multiuser facilities planned for ISS are as follows:

- Biology Research Laboratory
- Fluid Science Laboratory
- European Physiology Modules
- European Drawer Rack.

10.4.8 Russian Research Modules

The Russian Space Agency (RSA) will provide two research modules (Figure 10-16).

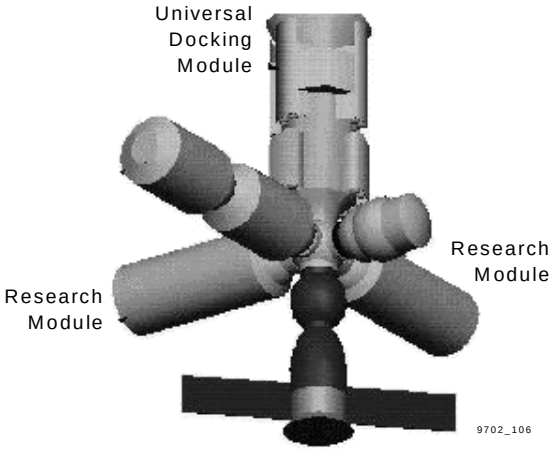

Figure 10-16. Russian Research Modules

These modules will be attached to the ISS later in the assembly sequence and are currently in the conceptual design phase. The total capacity for payloads has not been defined. Russian Research Modules may include different payload support structures than the International Standard Payload Racks (ISPR).

Russian Research Modules will accommodate experiments in different disciplines including Earth and Space Sciences, Fundamental Biology, Human Life Sciences, Microgravity Sciences and Advanced Technology.

10.5 Summary

The purpose of the ISS is to provide a permanent manned platform for conducting research in space. The principal advantages for conducting research on the ISS are the access to the microgravity environment, the unique vantage point provided by low Earth orbit, and the extended periods of time to perform the experiments. Each International Partners will have their own payloads and/or modules for conducting research. The areas of research are Life Sciences, Microgravity Sciences**,** Space Sciences, Earth Sciences, Commercial Product Development, and Engineering Research and Technology.

Questions

1. By conducting Materials Science research onboard ISS we can expect to benefit through
   a. improved power generation
   b. understanding cellular functions
   c. production of superior space products
   d. improved understanding of the properties of matter
2. The U.S. Laboratory module has a capacity for 24 rack locations. How many locations especially designed to support experiments will Payload racks occupy?
   a. 12
   b. 10
   c. 13
3. Which IP Partner is responsible for constructing the CAM?
   a. ESA
   b. NASDA
   c. RSA
   d. Canada
4. Which of the following best characterizes a Facility Class Payload?
   a. Long-term/permanent Station resident that provides services to a specific type of research
   b. Basic support structure and outer shell for housing payload hardware.
   c. Devices that are shared on a noninterference basis by multiple users.
   d. Supports a simple, short integration process and provides standardized interfaces or experiments.

Section 11
Extravehicular Activity Overview

11.1 Introduction

Building the International Space Station (ISS) requires an enormous international effort and many long hours of preparation. The two major groups responsible for building and maintaining the Space Station are Extravehicular Activity (EVA) and Robotics. There are over 600 tasks that must be successfully completed for the assembly of the ISS. It is estimated that this requires approximately 540 hours of EVA to accomplish (this estimate does not include predictions for EVAs on Russian hardware or any maintenance predictions). Many long hours of preparation, training, and teamwork are necessary to make the assembly of the ISS a successful endeavor.

11.1.1 People Involved in EVA

For planning purposes, it is helpful to identify crewmembers as either shuttle crewmembers or Station crewmembers. A shuttle crewmember becomes a Station crewmember when his or her equipment is transferred to the Station. However, for EVA, an Extravehicular (EV) crewmember is not considered a Station EV crewmember until 7A, when the Joint Airlock arrives. After the Joint Airlock arrives, there could be orbiter-based EV crewmembers and Station-based EV crewmembers. As a general rule, crewmembers in Extravehicular Mobility Units (EMUs), regardless of their nationality, work on U.S. segments of the Station and crewmembers in the Orlan spacesuits, regardless of their nationality, work on Russian segments.

11.1.2 Types of EVAs

In the shuttle program there are three basic types of EVAs: scheduled, unscheduled, and contingency. A scheduled EVA is defined as any EVA that is incorporated into the nominal flight plan. Unscheduled EVAs are performed to achieve or enhance mission objectives and are not incorporated in the nominal flight plan. Contingency EVAs are performed in emergency situations to ensure the safety of the crew and the Orbiter. ***For Station, there are only two types of EVAs: nominal and contingency***. The reason for this is that on Station an unexpected EVA can always be worked into the nominal flight plan. Table 11-1 references the EVA Flight Rules definitions for scheduled, nominal, unscheduled and contingency EVAs.

Table 11-1. EVA flight rules

Flight Rules	Scheduled EVA	Nominal EVA	Unscheduled EVA	Contingency EVA
Shuttle	A15.1.1-4	NA	A15.1.1-5	A15.1.1-6
Station	NA	B15.2.1-4	NA	B15.2.1-5

11.2 Objectives

The overall goal of this section is to provide the student with a greater understanding of the role of EVA with respect to Space Station assembly and the equipment associated with EVA operations (such as spacesuits, the Joint Airlock, and various tools/restraints).

After completing this section, you should be able to:

- Describe the major differences between the EMU and the Orlan spacesuits
- Identify the two major types of EVAs required for assembly of the Space Station
- Name the two major components that make up the Joint Airlock and describe the function of each component
- List the crewmember restraints and EVA tools available for the Space Station.

11.3 Comparison of Spacesuits

The Joint Airlock has the capability of supporting EVAs with EMUs and Orlans. Although Orlan training does not occur in the U.S. (it occurs in Russia), it is useful to understand the major differences between the EMU and the Orlan spacesuits.

11.3.1 Extravehicular Mobility Unit

As illustrated in Figure 11-1, the EMU is a modular suit made up of several parts which must be assembled for donning. The backpack on the back of the suit is called the Primary Life Support System (PLSS). It contains the necessary equipment and consumables to maintain crewmember life support. The PLSS and its components are exposed to vacuum, while the rest of the suit is nominally pressurized to 4.3 pounds per square inch differential (psid). EMU-based EVAs are nominally planned for 7 hours, including 15 minutes to egress the airlock, 6 hours of useful tasks, 15 minutes to ingress the airlock, and 30 minutes of reserved unplanned time. In addition, the EMU is equipped with a 30-minute supply of emergency oxygen located in the Secondary Oxygen Pack (SOP) at the bottom of the PLSS. Attached to the crewmember's wrist is a cuff checklist, which includes a status list for the EMU's Life Support System, and various off-nominal procedures. For additional safety, the EMU is equipped with Simplified Aid for EVA Rescue (SAFER) that allows the crewmember to pilot himself to safety, in the event that he becomes untethered and completely detached from the Space Station.

Figure 11-1. Extravehicular mobility unit

11.3.2 The Orlan-M

The Orlan-M, shown in Figure 11-2, is one adjustable size, requiring little assembly for donning. The Life Support System, mounted on the back of the suit, swings open like a door to allow crewmember access and entry into the suit. Unlike the EMU, the life support system is contained within the pressurized volume (5.7 psid) of the suit. Orlan-based EVAs are nominally planned for 5 hours. There is also a 30-minute supply of emergency O_2 located in the backup O_2 bottle. In contrast to the EMU's Cuff Checklist, Russian EV crewmembers typically do not bring out any procedures with them for EVAs; they rely almost solely on their memory from training. Like the EMU, the Orlan is also equipped with a version of SAFER that has been modified to fit the Orlan.

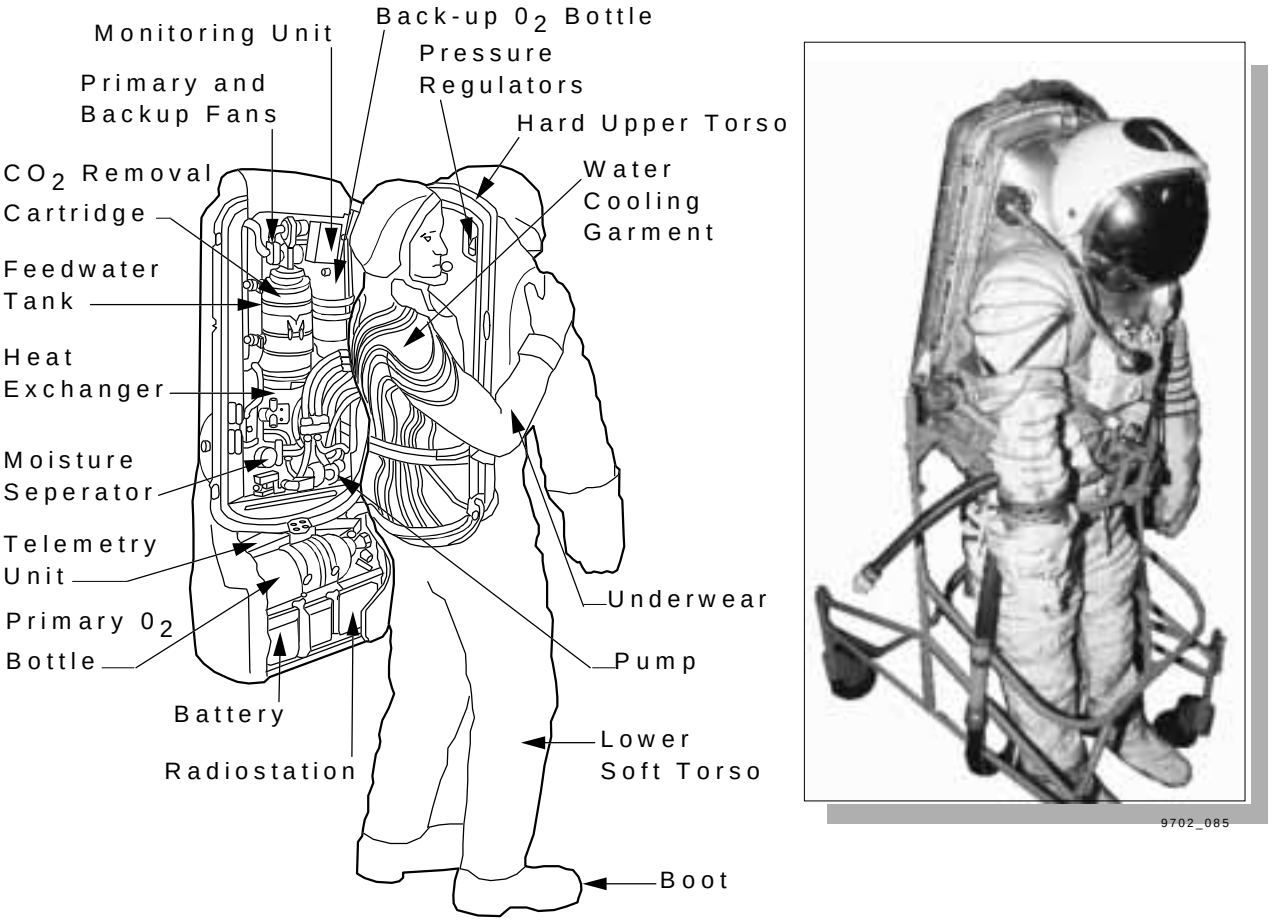

Figure 11-2. Orlan-M

11.3.3 EMU vs. Orlan

The EMU and Orlan spacesuits can be considered miniature spacecrafts. The suits contain all life support for a crewmember, including oxygen, pressure, cooling, filters for contaminants, power, and communication. While both suits were designed to allow crewmembers to work in the harsh vacuum of space, they have many differences which are outlined in Table 11-2.

Table 11-2. EMU and Orlan-M comparison

Suit feature	EMU	ORLAN-M
Sizing	Modular: The EMU is comprised of several interchangeable parts which are sized to fit the 5th percentile female to the 95th percentile male. Sizing rings in the arms and legs allow for resizing on orbit. Over 100 measurements are taken to ensure a proper fit in the gloves, upper torso, arms, lower torso, and boots	One adjustable size: The Orlan is compatible for crewmembers whose height falls between 5 feet 7 inches and 6 feet 2 inches. The Orlan's size is adjustable on orbit using Velcro straps to cinch up excess lengths
Entry Method	Waist entry: The crewmember puts on the EMU like clothes. There are various parts of the suit to assemble for donning. Self donning is possible, but usually an Intravehicular (IV) crewmember assists	Rear entry: The Orlan has a back door which swings open to allow the crewmember to step inside the suit. Self-donning is typical
Pressure	4.3 psid nominal	5.7 psid nominal
In-suit Prebreathe An in-suit prebreathe with 100% O_2 is required to allow the body to get rid of any nitrogen left in the blood stream which could cause decompression sickness (also known as "the bends")	If the cabin has been at 10.2 psi for at least 36 hours, a 40-minute in-suit prebreathe is required. If the cabin has been at 14.7 psi, a 4-hour in-suit prebreathe is required	30-minute nominal prebreathe (One reason for the shorter nominal prebreathe is the Orlan is pressurized to 5.7 psid. Also, the Russian Space Program accepts a higher level of nitrogen in the blood stream. Note that neither NASA nor the Russian Space Program has ever reported a case of the bends in space.)
On orbit useful life	From the time the EMU leaves processing (Boeing), the useful life of the EMU is 180 days or 25 EVAs. At the end of its useful life, the EMU is serviced and recertified for flight	The Orlan's useful life is 4 yrs or 10 EVAs. At the end of its useful life it is placed in a Progress and burned up on re-entry
Displays	The EMU is equipped with Caution and Warning Software (CWS) which sends messages to the Display and Control Module (DCM) mounted to the front of the suit and warning tones to the crewmember's Comm Cap. The crewmember views messages and suit parameters on a 12-character LCD on the DCM.	The Orlan suit is equipped with Caution and Warning (C&W) lights on the front of the suit and in the helmet which alerts the crewmember when critical suit parameters are beyond acceptable values
Communication	The EMU radio uses an Ultra High Frequency (UHF), duplex communication system. (Hardline communication is used for IV operations in the airlock.) EV crewmembers talk to the IV crewmember or the Capcom on the ground	The Orlan radio uses an UHF, duplex communication system. EV crewmembers talk directly with engineers on the ground (as opposed Capcom)

Table 11-2. EMU and Orlan-M comparison (continued)

Suit feature	EMU	ORLAN-M
Suit Servicing	The EMU umbilical provides power, battery recharge, suit cooling water, oxygen recharge, water recharge, and hardline communication for IV operations	The Orlan umbilical provides power, suit cooling water and prebreathe oxygen to the suit
On-orbit Maintenance	There is very little on-orbit maintenance required for the EMU because the water tanks, oxygen tanks, and battery can be recharged through the EMU umbilical. Some on-orbit maintenance would include changing out the Metox canisters (the Carbon Dioxide (CO_2) scrubbing mechanism in the suit) and resizing the EMU with various sizing rings	There is a relatively large amount of on-orbit maintenance required for the Orlans because the water tanks and oxygen tanks are completely replaced after each EVA (as opposed to being resupplied via an umbilical)
EVA Training	Task-based: U.S. EVA training currently utilizes a task-based training program. Crewmembers are trained to perform very specific tasks for an EVA on a specific flight. (For example: Task-based training teaches the crewmember to use a specific power tool on a specific bolt, using a particular torque setting and turning it a set number of times.) Although task-based training has been effective in the shuttle program, the ISS EVA training will become more skills-based in the future	Skills-based: Russian training utilizes a skills-based training program. Skills-based training teaches general concepts and generic skills which apply to numerous tasks and a variety of EVAs. (For example: Skills-based training would teach the crewmember general concepts about a power tool, how to use it, what its capabilities are, and when it should be used. Skills-based training does not necessarily go into the details of flight specific tasks.)

11.4 ISS Joint Airlock

The ISS Joint Airlock, scheduled to arrive on Flight 7A and illustrated in Figure 11-3, provides access to the vacuum of space for EVA capability. Nominally, two full EMUs and a short EMU (an EMU without the Lower Torso Assembly) are stowed in the Joint Airlock. In addition, two Orlans may be stowed in the Equipment Lock in the event of an Orlan-based EVA. ***The Joint Airlock is the prime site for EMU-based EVAs and is capable of supporting Orlan-based EVAs. It is connected to the starboard side of Node 1 by the Space Station Remote Manipulator System (SSRMS), also known as the Space Station robot arm. The two distinctive components of the Joint Airlock are the Equipment Lock and the Crew Lock.***

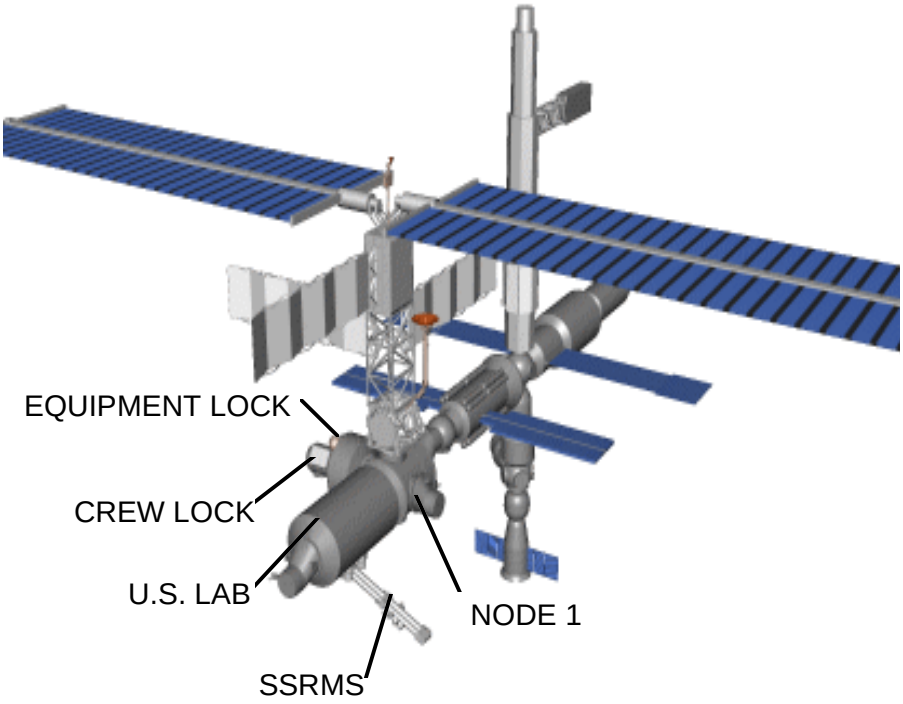

Figure 11-3. ISS at 8A

11.4.1 Components of the Joint Airlock

The ISS Joint Airlock is comprised of the Crew Lock (C/L) and the Equipment Lock (E/L) (Figure 11-4). Together they provide the capability to service, maintain, don/doff, and store EMU and Orlan spacesuits.

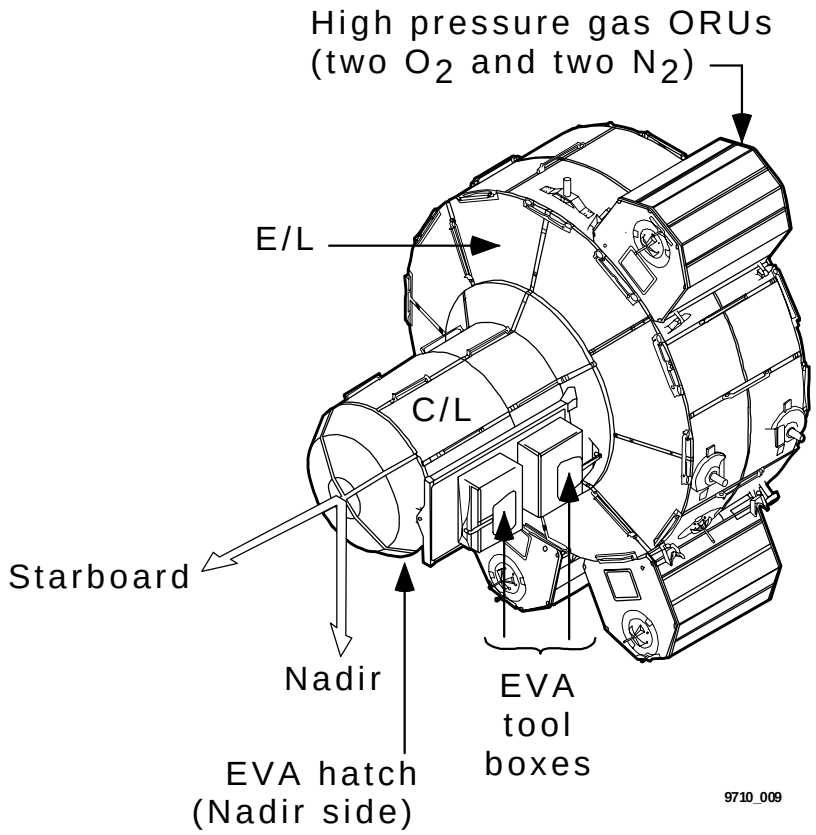

Figure 11-4. Crew lock and equipment lock

Crew Lock: ***The C/L (Figure 11-5) is the portion of the airlock that will nominally be depressed to vacuum so the crew can go EVA.*** Its design was derived from the shuttle external airlock (rotated 90°). It provides the egress point to vacuum via the EVA hatch. As the C/L is depressed down to 3 psi, the Depress Pump in the airlock is used to reclaim 70-80 percent of the cabin atmosphere. The rest of the atmosphere (3 psi down to vacuum) is vented to space through the Manual Pressure Equalization Valve (MPEV) on the EVA hatch. There are also MPEVs located on the IV hatch and the Node 1 starboard hatch.

The Umbilical Interface Assembly (UIA) panel is located on the wall of the C/L and supplies consumables to the spacesuits via an umbilical. In between a series of EVAs, EMUs may be stored in the C/L.

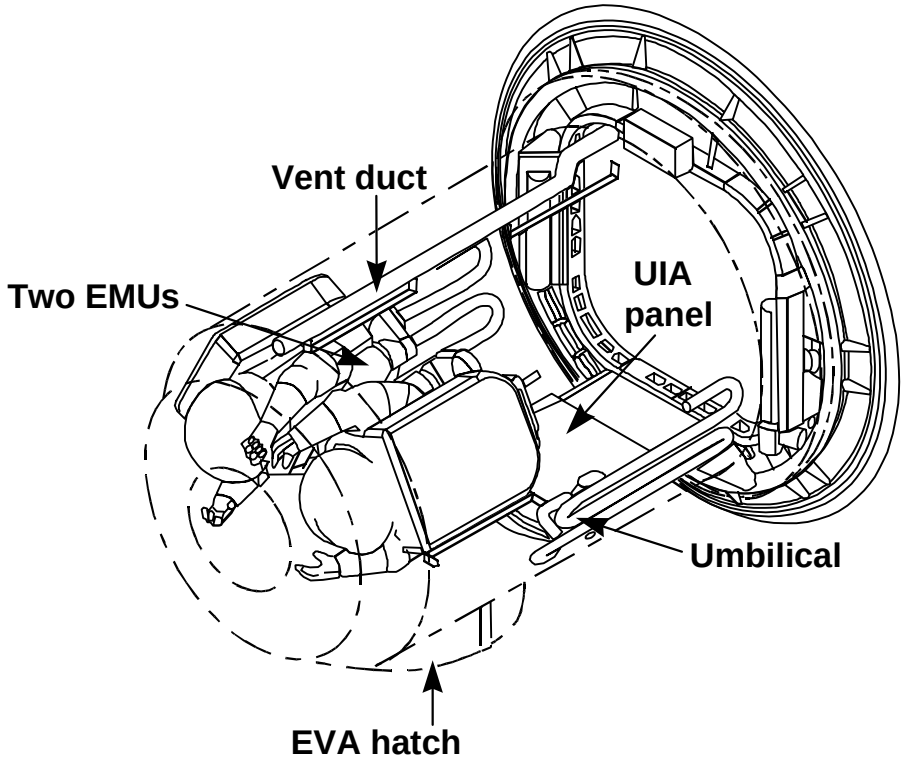

Figure 11-5. Crew lock

Equipment Lock: ***The E/L (Figure 11-6) is used for stowage, campout (when the crewmembers must sleep in the airlock overnight before an EVA), recharge/servicing of EMUs and Orlans, and donning/doffing of EMUs and Orlans.*** The majority of the EMU EVA equipment is stored in the E/L, including EMU ancillary equipment, SAFERs, batteries, power tools, and other important supplies. Attached to the seat tracks of the E/L are EMU Don/Doff Assembly (EDDA) stations that facilitate EMU mounting and servicing. In the event of an Orlan-based EVA out of the Joint Airlock, the Orlan Don/Doff Assemblies will also mount to the EDDA seat tracks in the E/L to allow for Orlan donning/doffing and servicing.

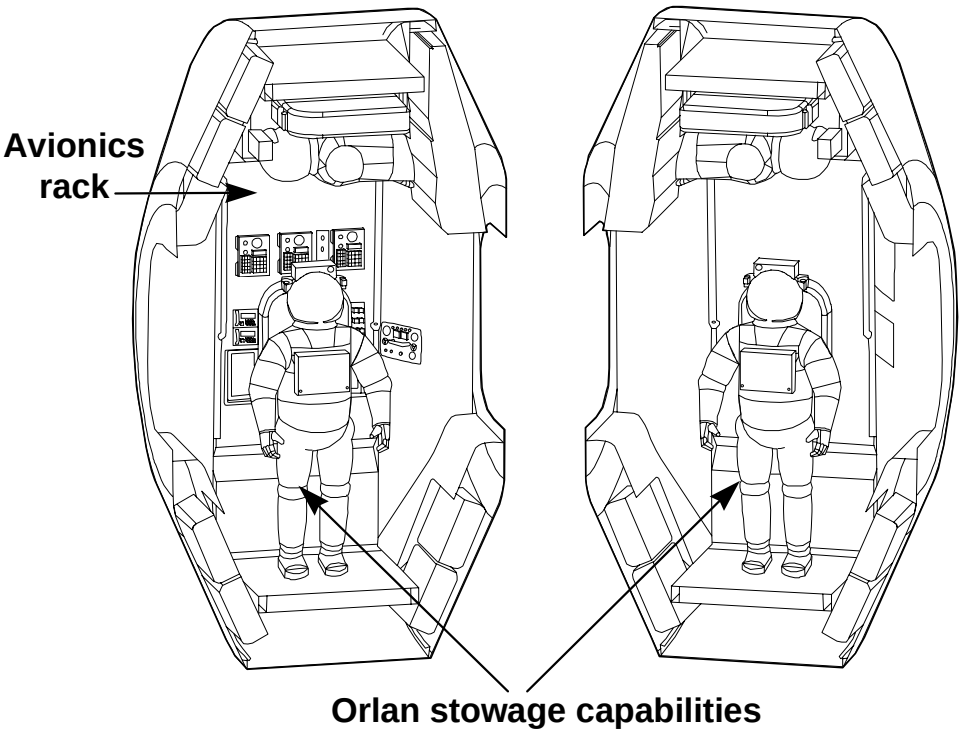

Figure 11-6. Equipment lock

11.4.2 ISS Joint Airlock System Interfaces

The Joint Airlock contains many system interfaces, known as Service Performance and Checkout Equipment (SPCE), that are essential for EMU servicing. The following are overview definitions of the SPCE items located in the E/L and C/L

Power Supply Assembly (PSA) - The PSA receives 120 V dc from the Station power from RPCM AL-2A3B-C (A054) and converts the power to 18.5 V dc for the EMU and 28 V dc for the Orlan depending on the switch configuration. The PSA also has an auxiliary port (28 V dc) to power portable equipment.

Battery Charger Assembly (BCA) - The BCA has four separate charger units. Each charger has six different channels capable of charging a variety of batteries including power tool batteries, helmet light batteries, and EMU batteries. The BCA is reprogrammable from a serial data port to accommodate any type of battery.

Battery Stowage Assembly (BSA) - The BSA stores the batteries to be recharged and contains a unique connector for each type of battery. The capacity of the BSA is 16 batteries. There is an external port that can accommodate six more batteries if needed.

EMU Don/Doff Assembly (EDDA) - The EDDA is used for suit donning/doffing, storage, and servicing. It is hinged to allow access to the PLSS for servicing tasks as well as access to the rack behind it.

EMU Water Recharge Bag - The EMU Water Recharge Bag is a portable water storage unit that is filled from the galley for EMU water recharge. One bag holds 20 lbs of water which is enough water to recharge two EMUs.

In-flight Refill Unit (IRU) - The IRU pumps the water from the EMU water recharge bag to the EMUs for water recharge via the UIA panel (umbilical). The IRU has an inlet for the EMU water recharge bag and an auxiliary port for additional water supply. The auxiliary port can be used to fill the EMU drink bags.

Umbilical Interface Assembly (UIA) - The UIA is the major consumables interface in the Joint Airlock. It provides servicing through the umbilicals. For the EMUs, the UIA supplies water for recharge, suit cooling, waste water return, O_2 supply, hard-line communication, and suit power. Located on the UIA panel is the Onboard Spacesuit Control Assembly (OSCA) which provides prebreathe O_2 to Orlans at 70 pounds per square inch gauge (psig). The UIA panel in the C/L supports servicing of two EMUs, two Orlans, or one of each simultaneously.

SPCE Maintenance Kit - The SPCE maintenance kit is comprised of the equipment required for SPCE maintenance and miscellaneous items. It includes an umbilical purge tool, a cooling loop flushing fixture, additional EMU water recharge bags, filters, an EMU serial data cable for EMU diagnostics, and critical backup units. These items might not be stowed together but are collectively referred to as the SPCE maintenance kit. Figure 11-7 shows the Joint Airlock system interfaces.

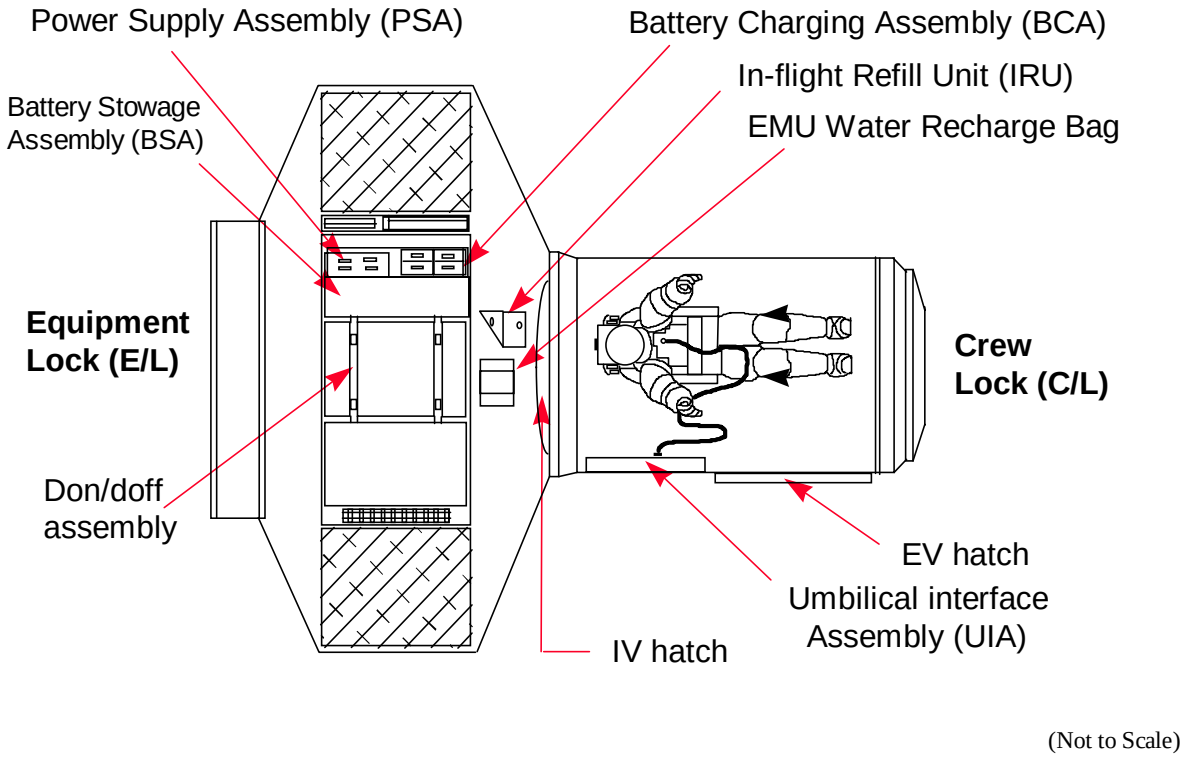

Figure 11-7. Joint airlock system interfaces

11.5 EVA Operations

There are numerous operations that must occur before and after an EVA to ensure a successful EVA. These activities include preparing the airlock, inspecting the suits, prebreathe protocol procedures which guard against decompression sickness, servicing the suit after an EVA, and closing out the airlock.

11.5.1 Prep/Post Activities

There are many procedures which must be accomplished before and after an EVA. The activities which occur before an EVA are called "Prep" (as in *prep*aration) activities. The activities that occur after an EVA are called "Post" activities. Table 11-3 defines the most common Prep/Post activities required to support U.S. EVAs.

Table 11-3. Prep/Post EVA procedures

Before an EVA:	After an EVA:
Airlock Prep This is performed the day before EVA or the day before the orbiter docks to the Station. The purpose is to configure and activate the airlock	**Repress** EV crew ingresses and connects to the umbilicals. The IV hatch MPEV is opened to equalize C/L with E/L. Before the airlock is completely repressed, an airlock pressure integrity check occurs at 5 psi
EMU Checkout These procedures are performed at least 1 day before the EVA. (In a series of EVAs, EMU Checkout would be performed approximately every five EVAs.) The purpose of EMU Checkout is to ensure the integrity of the suits **Campout** Campout (so named because the crew sleeps in the airlock overnight) is a part of the EMU prebreathe protocol to prevent decompression sickness. It is performed the night before an EVA and includes a 1 hr initial mask prebreathe on 100% O_2, depress of joint A/L to 10.2 overnight, pre-sleep, sleep, post-sleep, repress of A/L to 14.7 for personal hygiene break while on portable O_2 masks, and depress of A/L back to 10.2. During this time, two crewmembers are isolated in the airlock overnight **EVA Prep** This is performed the day of an EVA and includes preparation activities, suit donning, N_2 purge at 14.7, and a final 30-minute, in-suit prebreathe **Depress** EV crew depresses C/L to 3 psi via the depress pump, stopping at 5 psi for a leak check of the EMU. The final depress to vacuum is accomplished by venting the remaining atmosphere through the EVA hatch MPEV	**Post EVA** This is performed directly after repress. EV crew doffs suits at the EDDAs, stows EMU ancillary equipment, performs suit drying and seal maintenance, performs battery, and METOX recharge **EMU Servicing** This is performed the day after an EVA. Crew verifies that batteries, METOX, and O_2 are recharged, and performs EMU water recharge **Airlock Close-out** This is performed after the last EVA of a series of EVAs to configure the airlock to a dormant mode until the next scheduled EVA. Airlock equipment is powered down and the racks are secured

11.5.2 Decompression Sickness Prevention

In order to prevent decompression sickness (also known as the bends), crewmembers must eliminate the nitrogen in their bloodstream. A prebreathe protocol has been established in both the Russian EVA training and the U.S. EVA training which outlines steps to do so. The Russian prebreathe protocol consists of breathing 100 percent O_2 for 30 minutes while in the suit. The U.S. prebreathe protocol is more complicated. The operational goal of the prebreathe protocol is to spend as little time as possible in the final in-suit prebreathe, or on Quick Don Masks (QDMs) for the initial prebreathe, without compromising the standard of decompression sickness prevention. (QDMs are uncomfortable and inconvenient. The in-suit prebreathe is tiring and cuts into the amount of time a crewmember can perform EVA tasks.) The following chart outlines the prebreathe protocol for an EMU-based EVA, assuming a suit pressure of 4.3 psid during the EVA.

Time at 10.2 psi	Initial prebreathe	Final in-suit prebreathe
0 hours	0 minutes	4 hours
12 hours	60 minutes	75 minutes
24 hours	60 minutes	40 minutes
36 hours	0 minutes	40 minutes

This protocol indicates that if the cabin pressure has been at 10.2 psi for at least 36 hours, then the crewmember has only one final prebreathe with 100 percent O_2 in the suit for 40 minutes. At the other extreme of the chart, if the cabin has remained at 14.7 the entire time (zero hours at 10.2), then a 4-hour in-suit prebreathe is required. In the shuttle program, it is reasonable to depress the entire cabin down to 10.2 for a period of time to shorten the length of the final, in-suit prebreathe. However, in the ISS program, it is unreasonable to depress the entire Station down to 10.2 every time an EVA is scheduled. As a result of this predicament, the Campout Prebreathe protocol was developed in an effort to avoid long in-suit prebreathe times.

Campout begins the day before the EVA. Initially, crewmembers must wear prebreathe masks (QDMs) in order to breathe 100 percent O_2 for 1 hour before their sleep period. Next, the Joint Airlock (both the E/L and the C/L) is depressed down to 10.2, and the two EV crewmembers sleep in the airlock overnight. After the sleep period is over (at least 8 hours), the Joint Airlock is repressed back to 14.7 and the EV crewmembers must don the QDMs again for an additional hour during their hygiene break and postsleep activities. Finally, the airlock is depressed back down to 10.2, where the crew begins EVA preparation activities. As a result of the Campout protocol, the EV crewmembers only have a 30-minute, in-suit prebreathe just prior to depress to vacuum, before their EVA.

11.6 EVA Tools and Restraints

There are over 600 EVA tasks planned for the assembly of the ISS. Although this may sound overwhelming, in reality, most of these tasks may be simplified to bolts and connectors. Station EVAs consist mostly of loosening launch restraints, installing handrails, connecting and assembling structures (such as antennas and pieces of truss). In addition, there are tasks which involve setting up connectors for umbilicals which provide power, data and fluids to the Station. In general, the SSRMS/RMS (Shuttle Remote Manipulator System) docks modules together, and EVAs ensure that all the proper connections have been made. Most of these tasks are hand and labor intensive. There are numerous tools and restraints which are used to accomplish these EVAs. The rest of this section is dedicated to providing a picture and a very brief description of these ISS tools and crew restraints.

11.6.1 Mini-Workstation

The Mini-Workstation (MWS), illustrated in Figure 11-8, attaches to the front of the EMU around the DCM. It can be used to carry small tools and provides a loose crew restraint with the end effector and retractable tether. In other words, the loose restraint helps the crewmembers stay at their worksite; however, they have to use a hand for stability when tightening bolts or performing other such tasks. The MWS is manifested on all flights.

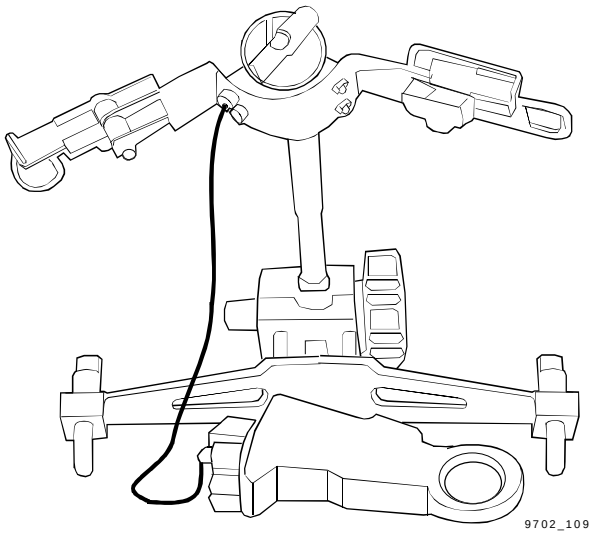

Figure 11-8. Mini-Workstation

11.6.2 Multi-Use Tether

The Multi-Use Tether (MUT) is attached to the MWS and can carry 75-100 lb. Referenced in Figure 11-9, it can also be used to transport small objects such as Orbital Replaceable Units (ORUs) and Articulating Portable Foot Restraints (APFRs). The MUT end effector provides a semi-rigid restraint for EV crewmembers at the worksite by clamping onto a handrail. Advantages of the MUT are that it requires less time to set up than APFRs and is more stable than the MWS end effector. The MUT is a part of the standard tool complement starting on Flight 2A.

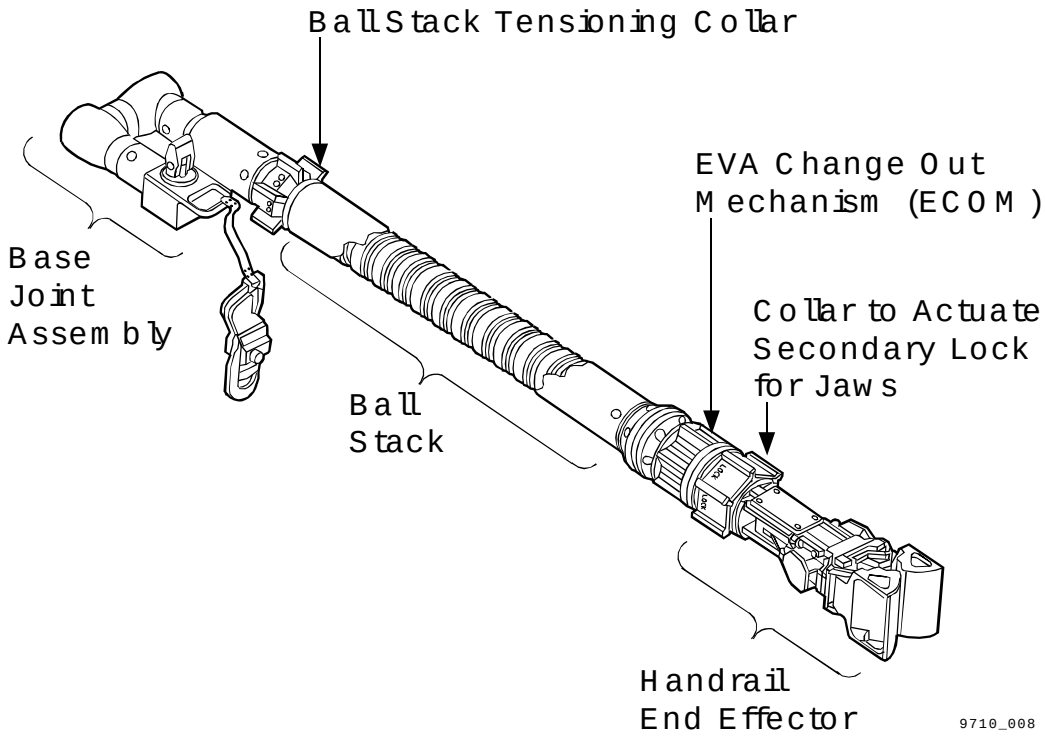

Figure 11-9. Multi-Use Tether

11.6.3 Portable Work Platform

The Portable Work Platform (PWP), illustrated in Figure 11-10, is composed of three modular components:

a. the APFR

b. the Temporary Equipment Restraint Aid (TERA)

c. the Tool Stanchion

It is used in a variety of configurations, according to the EVA tasks which are to be performed.

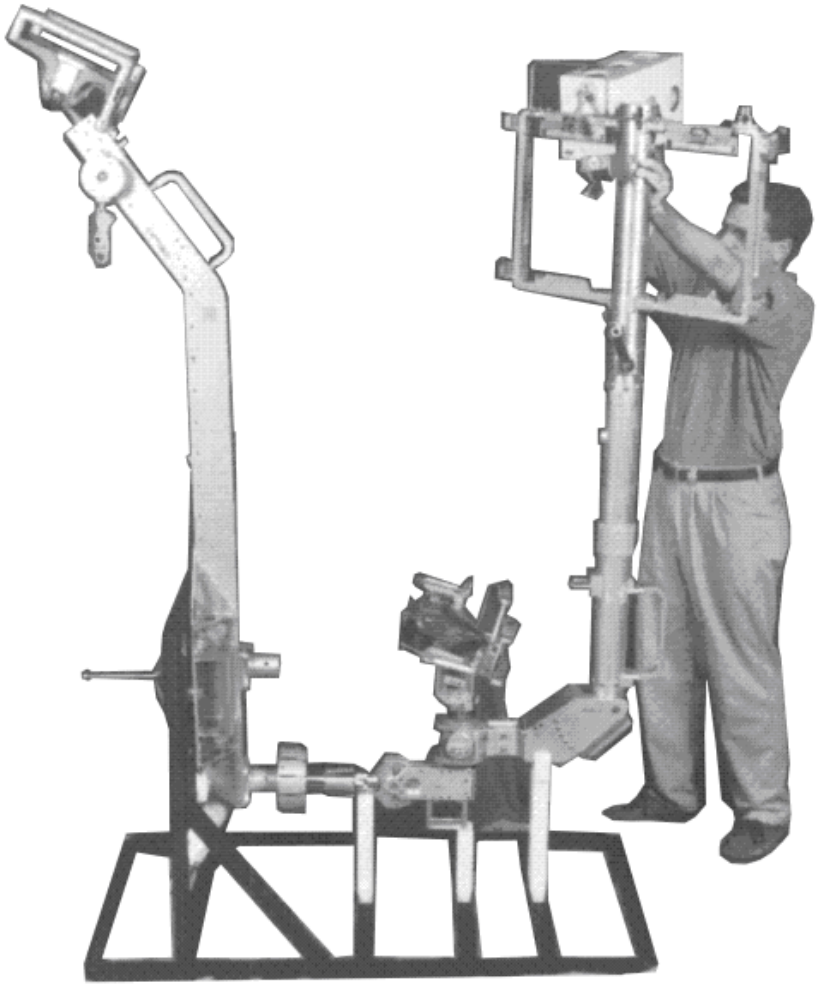

Figure 11-10. Portable Work Platform

11.6.3.1 *Articulating Portable Foot Restraint*

The Articulating Portable Foot Restraint (APFR) attaches directly to the ISS, the SSRMS/RMS or the TERA via a socket (see Figure 11-11). It provides the crewmember with rigid restraint at the worksite and a load limiter protects the structures that it is mounted in. There are foot pedals

for moving the APFR in the yaw and roll directions. The joint articulation in the pitch direction must be adjusted prior to ingressing the APFR.

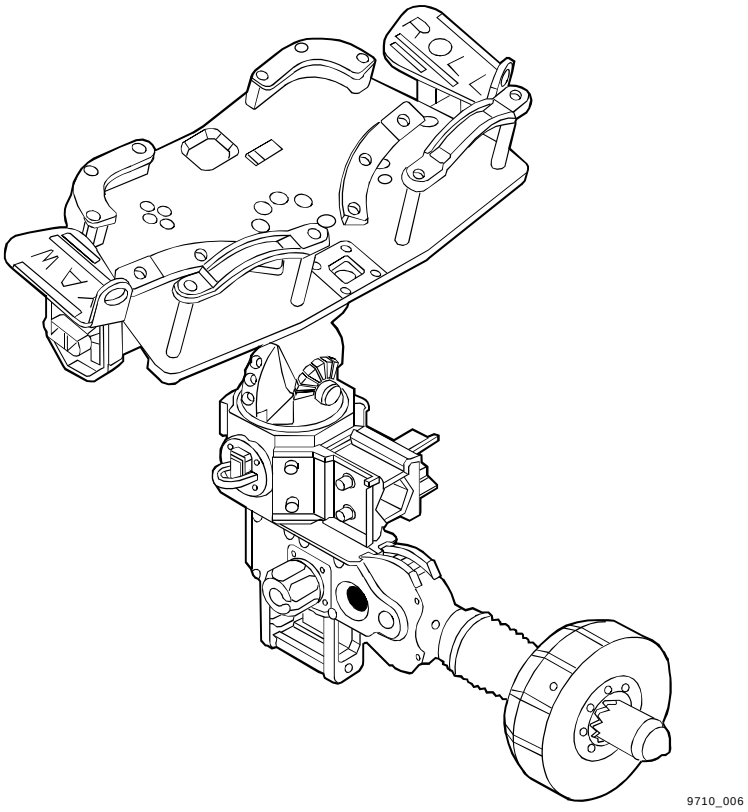

Figure 11-11. Articulating Portable Foot Restraint

11.6.3.2 *Temporary Equipment Restraint Aid*

The Temporary Equipment Restraint Aid (TERA), illustrated in Figure 11-12, interfaces to the SSRMS/RMS via a grapple fixture. It is a support structure that provides a grid for holding replacement ORUs and other miscellaneous EVA equipment. The ORU adapter plate interface is an articulating mechanism which allows the restrained crewmember to move the ORU to a convenient position.

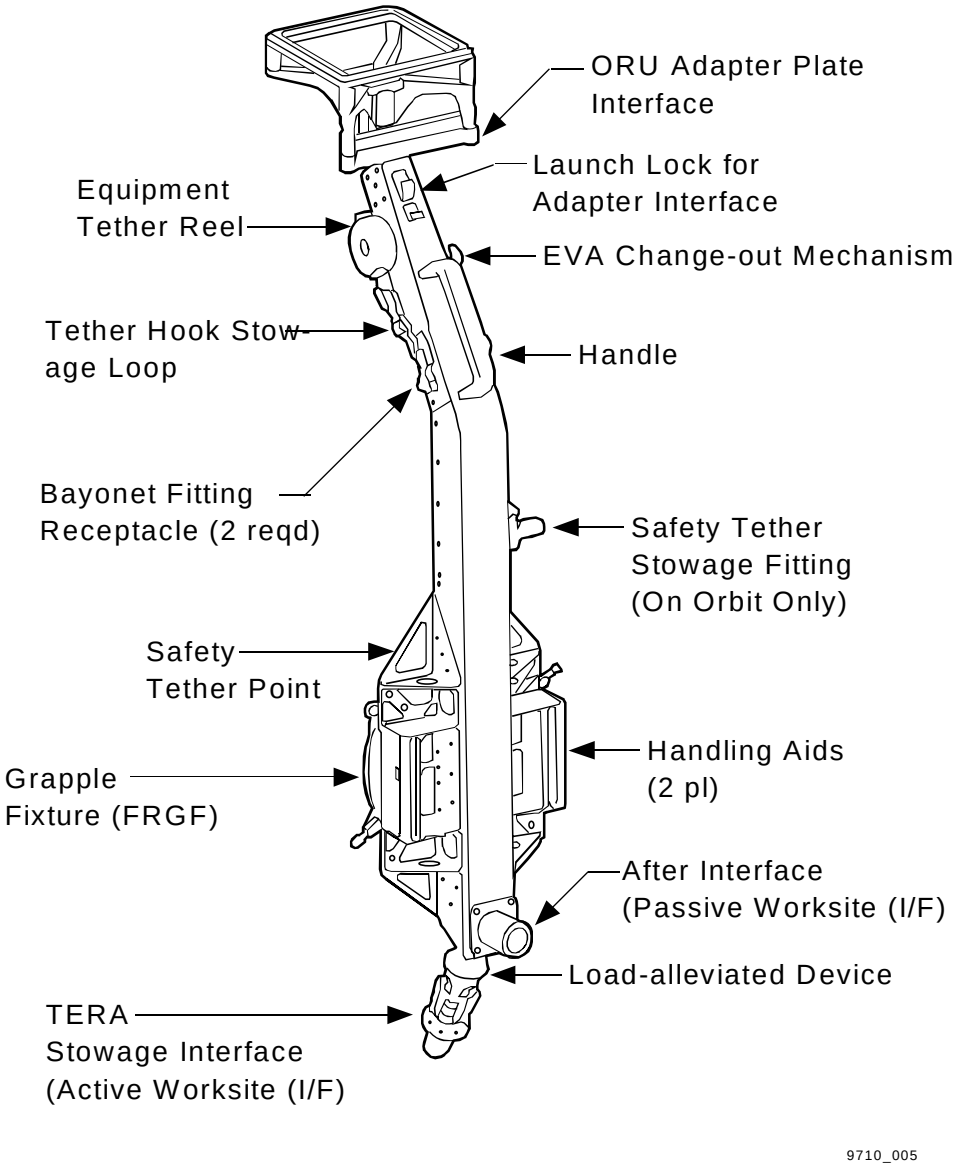

Figure 11-12. Temporary Equipment Restraint Aid

11.6.3.3 *Tool Stanchion*

The Tool Stanchion attaches to the APFR (see Figure 11-13). Tool boards slide into the top of the stanchion. It functions much like a workbench, holding tools and providing temporary stowage of old ORUs. The crewmember is able to yaw and tilt the tool stanchion with respect to the APFR.

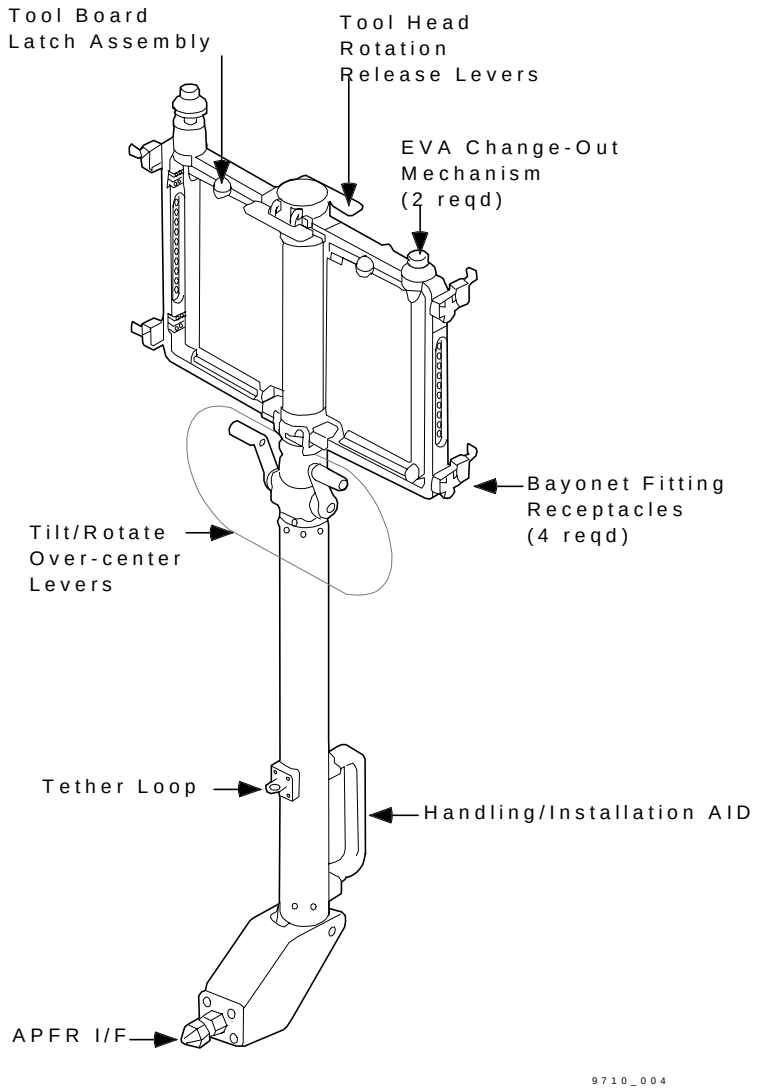

Figure 11-13. Tool stanchion

11.6.4 *Crew and Equipment Translation Aid Cart*

The Crew and Equipment Translation Aid (CETA) cart can efficiently and effectively translate EV crewmembers, EVA equipment and tools, and ORUs. Illustrated in Figure 11-14, it is manually operated by an EV crewmember who utilizes a hand brake to stop and secure the cart at a worksite. The CETA cart translates along the Mobile Transporter (MT) rails and can be used as a work platform to access various worksites on ISS. There will eventually be two CETA carts permanently on Station: one is manifested on Flight 9A and one on 11A.

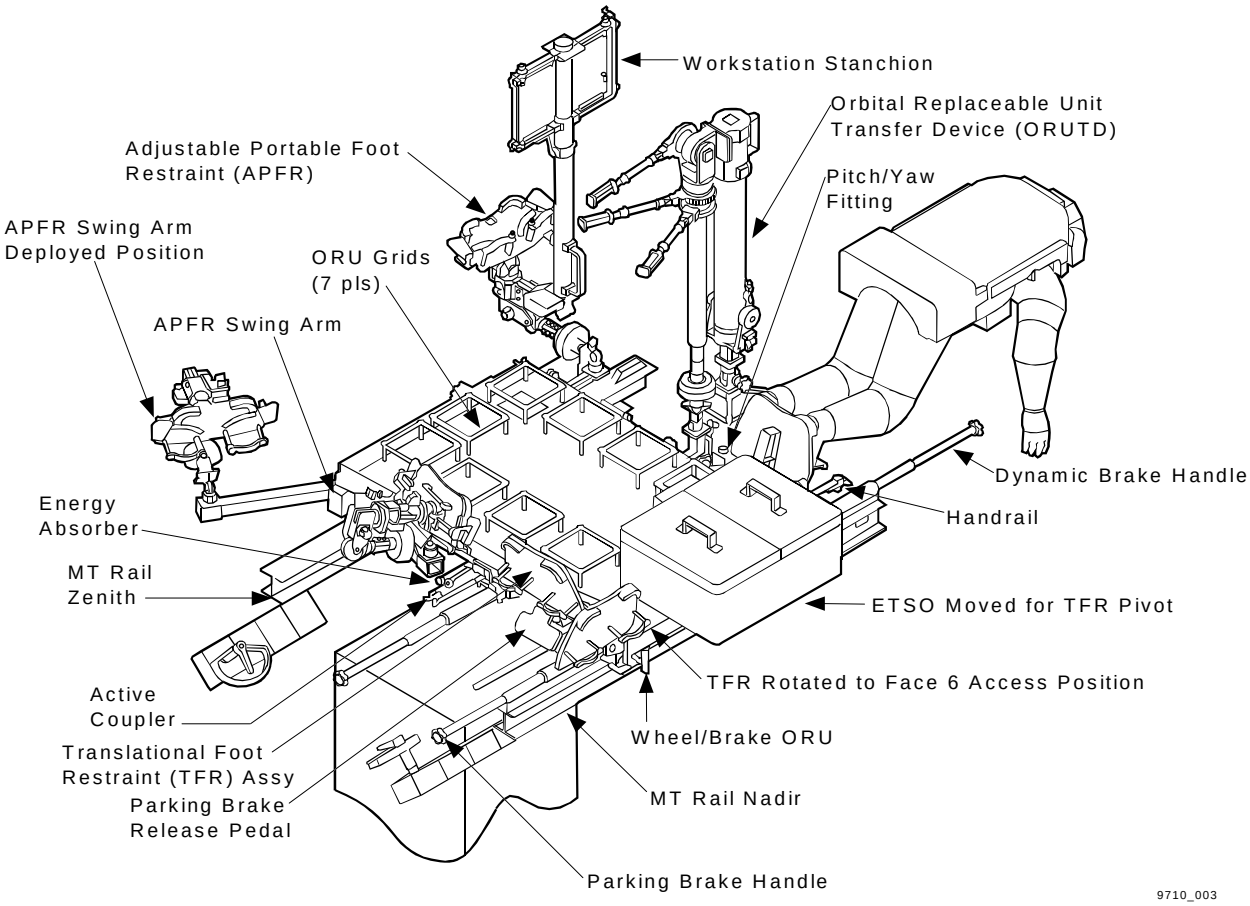

Figure 11-14. Crew and Equipment Translation Aid Cart

11.6.5 *ORU Transfer Device (Crane)*

Shown in Figure 11-15, the Crane is a mechanical device that facilitates the transfer of ORUs to and from worksites along the Truss structure during maintenance EVAs. The Crane has a telescoping boom which extends to 18 feet and possesses pitch and yaw capabilities. It may be operated manually (with the crank) or with a power tool and is stowed on the CETA cart. Currently, there is a Crane manifested on Flights UF-1 and 7A.

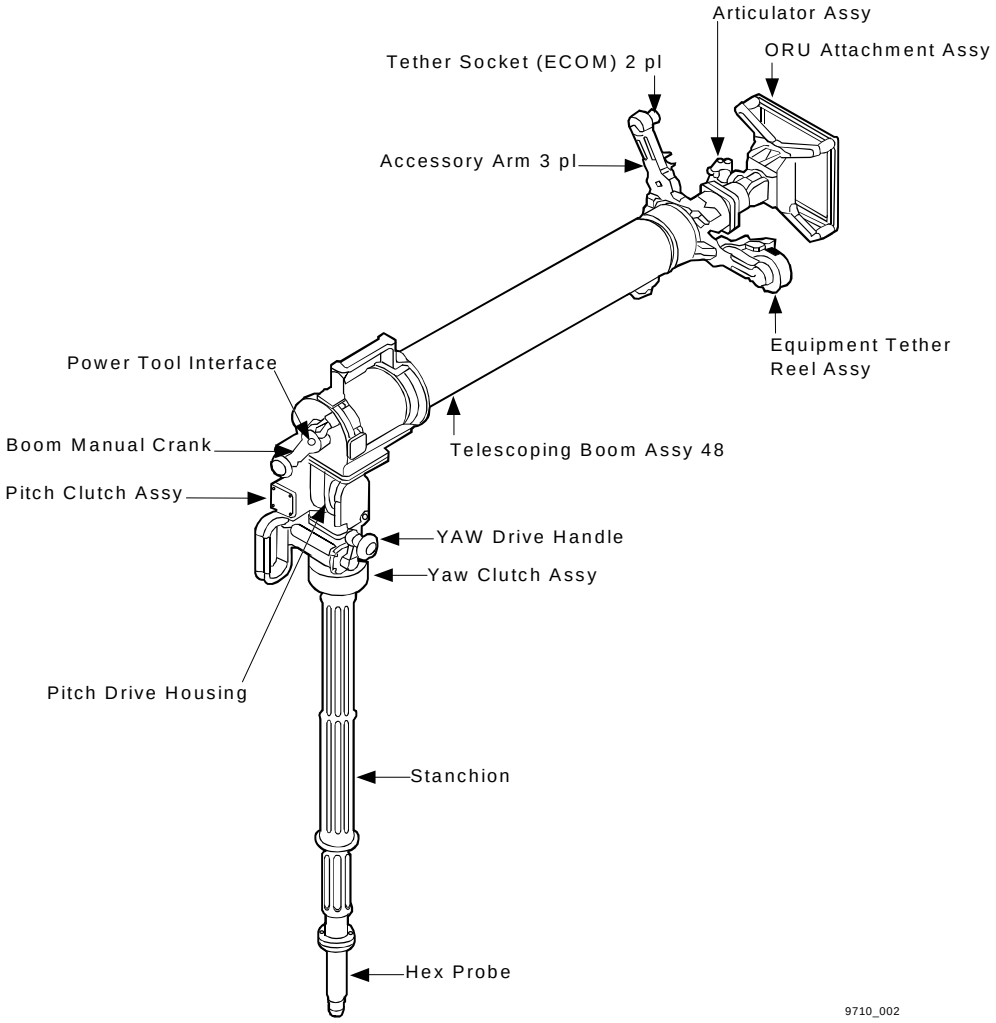

Figure 11-15. ORU transfer device (Crane)

11.6.6 *Pistol Grip Tool (Power Tool)*

The power tool (Figure 11-16) is a self-contained, computer-controlled, battery-powered, pistol-grip style tool. It may also be used as a non-powered ratchet wrench. It is comparable to a very smart electric drill. Its function is to apply torque to mechanical interfaces and fasteners (such as bolts) and may be used with various socket extensions and torque multipliers. Torque, speed, and turn limits may be programmed into the power tool to perform many EVA tasks. The batteries which supply power to the tool are replaceable on the ground or on orbit. Each ISS flight, beginning with Flight 2A, will have two power tools to use for EVA operations.

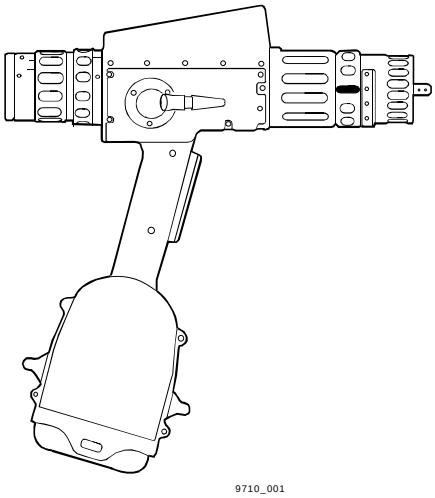

Figure 11-16. Pistol grip tool (power tool)

11.6.7 Tool Box

The Tool Box, shown in Figure 11-17, stores a variety of EVA tools. The two tool boxes on the CETA cart are used for frequently used EVA tools, while the two tool boxes on the airlock are used to stow infrequently used tools.

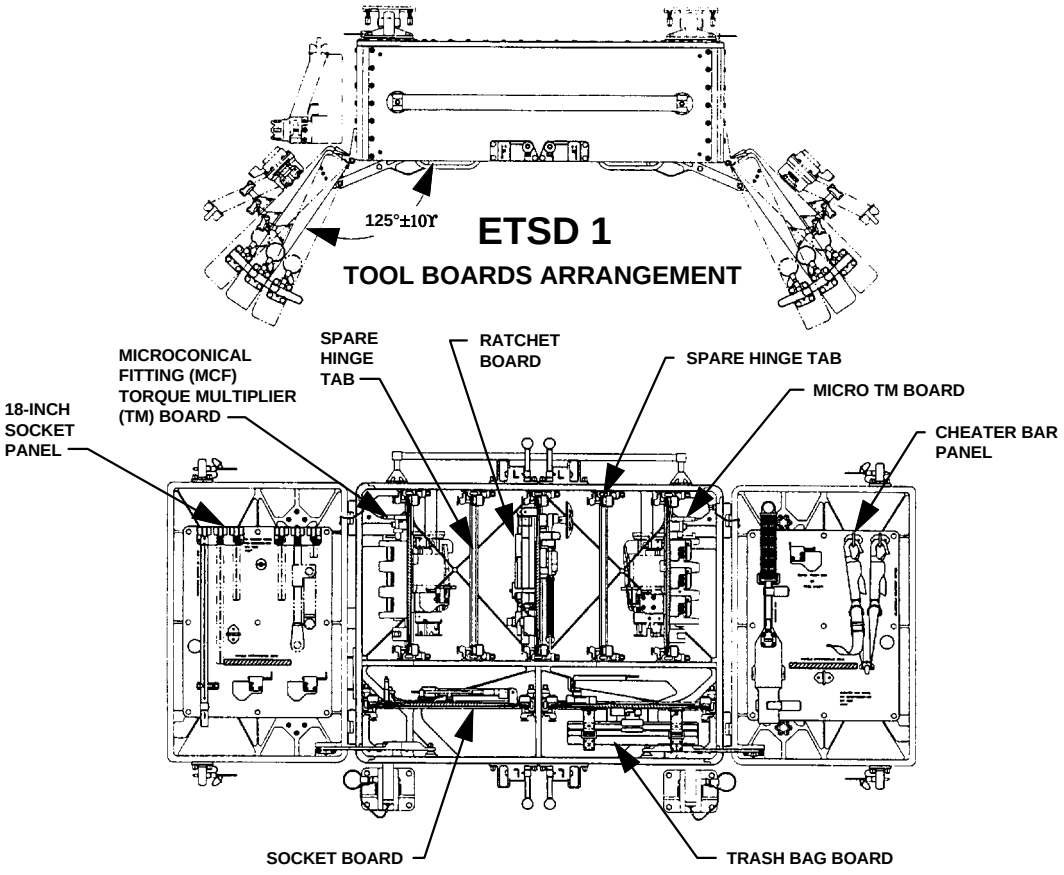

Figure 11-17. Tool box

11.7 Summary

EVA plays a major role in the assembly and maintenance of the ISS. On the Station, there are two main types of EVAs: Scheduled and Contingency. The Flight Rules define these EVAs to provide a basis by which flight controllers may make important planning decisions.

A ISS EV crewmember may be in an Orlan suit or an EMU. Although the suits serve the same purpose (to provide life support for EV crewmembers) there are many differences between the two suits which are outlined in this lesson. Some of the major differences include differences in pressure, sizing, useful life, entry method, prebreathe protocol, and displays.

The Joint Airlock, which arrives on Flight 7A, is made up of the C/L and the E/L. The E/L provides storage, and recharge/servicing for EMUs and Orlans. It also serves as sleeping quarters for the crew during the Campout phase of the prebreathe protocol. The E/L has the capability to support both Orlan-based and EMU-based EVAs. The C/L is the volume of the Joint Airlock that will nominally be depressed to vacuum so that the crew may egress the airlock for an EVA. The C/L is also the location for the UIA panel which provides multiple consumables via an umbilical to the suits.

Once the crew has egressed the airlock, there are multiple tools and restraints that are used to promote successful EVAs. The most common ISS tools/restraints are the MWS, MUT, PWP, APFR, TERA, Tool Stanchion, CETA cart, Crane, Power Tool, and Tool Boxes.

Questions

1. Indicate which of the following characteristics correspond to either the EMU or the ORLAN:

__	a.	Nominally pressurized to 4.3 psid	1. EMU
__	b.	Modular components	2. ORLAN
__	c.	After useful life, burns up on re-entry	
__	d.	Usually requires a dedicated IV crewmember to assist in donning	
__	e.	Suit parameters displayed on DCM	
__	f.	Nominally pressurized to 5.7 psid	

2. True or False. The Equipment Lock is included in the volume which will nominally be depressed to vacuum so the crew can go EVA.

3. True or False. The Mini-Workstation (MWS) can be used to provide loose crewmember restraint.

4. True or False. The Joint Airlock arrives on Flight 7A.

5. According to the EVA Flight Rules, the basic types of ISS EVAs are:

   a. Scheduled and Unscheduled

   b. Scheduled and Contingency

   c. Scheduled, Unscheduled, and Contingency

   d. None of the above

Section 12
On-Orbit Maintenance Overview

12.1 Introduction

Keeping the Space Station working in a nominal mode requires more maintenance activity than we have seen in past programs. Both potential crewmembers and flight controllers, will have some experience with On-Orbit Maintenance (OOM) during the Space Station Program. Crewmembers may have to troubleshoot, service, or replace an Orbital Replacement Unit (ORU). Flight controllers may have to perform procedures to determine the status of a particular ORU or to isolate it from the rest of a system so a crewmember can remove and replace it. This section presents the nomenclature, philosophy, and strategy of OOM.

12.2 Objectives

Upon completing this section, you should be able to:

- Describe the International Space Station (ISS) operational maintenance philosophy
- Describe the maintenance roles and responsibilities of the International Partners (IPs)
- Summarize the different methods, types, and levels of OOM
- Summarize the typical tools and procedures used in OOM.

12.3 Maintenance Philosophy/Definitions

Several unique factors of ISS, relative to previous U.S. space vehicles, have influenced the ISS philosophy of maintenance. The first unique factor is that the ISS never returns to the ground. Presently, mechanical malfunctions on the Space Shuttle are handled by applying temporary repairs which allow the shuttle to continue to function safely both on orbit and during re-entry. Once on the ground, the vehicle is thoroughly inspected and any defective systems or Line Replaceable Units (LRUs) are repaired or replaced. The result is a vehicle which is “like new” and ready for another launch. All ground repairs are considered to be permanent. Conversely, since the ISS never returns to the ground, all repairs must be made on orbit. Since the ISS is designed to operate for many years, all repairs must be designed to be permanent. (In space, temporary fixes are risky and may take more of the crew’s time than permanent repairs.) Here, the crew functions as both the operators and the maintainers of the ISS systems.

Another unique aspect of the ISS is that the entire vehicle is assembled in orbit. The zero-g environment of space causes special problems for crewmembers. Tools and loose ORUs have to be tethered and small parts restrained so that they do not float away. Crewmembers have to determine the best method of anchoring themselves while they attempt to remove and replace defective ORUs and parts. In the Intravehicular Activity (IVA) environment, particles of debris

caused by drilling and filing operations have to be collected and disposed of so they do not contaminate the crew's environment.

Finally, the lack of comprehensive end-to-end testing of the ISS components carries a great deal of potential for subsequent problems. Ideally, all of the ISS modules and trusses are assembled on the ground; the mechanical and electrical interfaces between the various modules and trusses are tested; and any problems are repaired. The vehicle is then disassembled and the components carried into orbit by various launch vehicles. In the ISS program, this is not the case. Many times the testing of the interface between two mating modules is impossible, because while one module is being carried into space, the module with which it interfaces is still being assembled on the ground.

The Hubble Space Telescope program's reduced budget resulted in the fact that a final end-to-end test of the telescope's mirror was never conducted. A spherical aberration in the mirror was not discovered until the telescope was in orbit. Repairs to the telescope while in orbit were costly and required many difficult Extravehicular Activities (EVAs) to correct the problem.

The key to success for the ISS is timely and effective maintenance. The ISS program will be judged by the quality and quantity of science data produced: it is essential the science-producing payloads are kept operating as long as possible. To function nominally, payloads require ISS services such as electrical power, cooling, pressurized gases and Command and Data Handling (CDH). Again, to keep all of these services operating in a nominal manner, timely maintenance is essential.

12.3.1 On-Orbit Maintenance Philosophy

The ISS OOM philosophy is to use available resources to maintain, repair and replace failed ISS hardware components and return the affected systems to their original configuration and efficiency.

Contrast this with the present shuttle in-flight maintenance philosophy:

- The use of temporary repairs and organizational maintenance (removal and replacement or cannibalization of selective LRUs) to ensure mission success, or to increase levels of safety
- Permanent repairs will be made after the vehicle lands (during ground processing)

NASA and the Russian Space Agency (RSA) have slightly different approaches to maintenance conducted on space stations. NASA's baseline approach for the ISS is to remove and replace defective ORUs in their entirety. In limited cases, where time considerations and the lack of a spare ORU do not permit replacement, repairs are made to a part of an ORU. This approach is based on the idea that replacing ORUs requires less crew training and reduces the amount of crew time required to make repairs, thus increasing the amount of time to perform science.

The RSA approach for Mir seems to be to repair ORUs in-situ (in place) on orbit. In some cases, where the particular ORU is a critical one, the temporarily repaired ORU is replaced by a spare ORU when it becomes available via a Progress resupply flight. In the past, RSA has had limited

down-mass capabilities, requiring all ORUs to be maintained on orbit. Generally, ground servicing has not been an option.

The ISS requires cooperation from the various IPs in all areas, including maintenance. IPs are responsible for the following activities for their respective components of Station hardware: planning, training, and execution of maintenance procedures.

In addition, each IP is responsible for providing their own tool kits (metric). Tool sharing between IPs is expected. In some cases, one IP's spare parts may be delivered to orbit by another IP's launch vehicle. In the event of the loss of a component which is critical to crew safety, vehicle integrity, or mission success, and if the IPs agree to it, parts may be borrowed or "cannibalized" from one IP module and used in another.

12.3.2 Methods of On-Orbit Maintenance

There are three distinct modes of performing maintenance on the ISS:

- IVA - Performed inside the vehicle
- EVA - Performed outside the vehicle, using special EVA tools, restraints and aids (CETA cart)
- EVR (Extravehicular Robotics) - Using the Space Station Remote Manipulator System (SSRMS) alone or in conjunction with EVA to perform external maintenance. Using the SSRMS alone to perform external maintenance is the preferred method of performing EVR, since this minimizes the crewmembers' exposure to the hazards of the space environment. When performed in conjunction with EVA, the SSRMS may be used to either move the work to the crewmember, or the crewmember to the worksite

For an example of a maintenance activity involving all three modes of maintenance, consider a failed external video camera luminaire unit:

- EVA - The crewmember goes EVA
- EVR - The SSRMS is used to position the EVA crewmember in the vicinity of luminaire assembly
- EVA - The crewmember removes the luminaire assembly and takes it inside
- IVA - The bulb is removed from the luminaire assembly and replaced (at Maintenance Work Area (MWA))
- This process is reversed to put the luminaire assembly back in its original location

Maintenance operations play an important role in overall ISS operations

(Interesting data concerning OOM)

Estimates for ISS crew time for maintenance are as follows (Based on data from Logistics and Maintenance IPT)

- 421 EVA - Total mean maintenance crew hours per year
- 777 EVR - Total mean maintenance crew hours per year
- 2536 IVA - Total mean maintenance crew hours per year

Presently, RSA maintenance of Mir requires approximately 75 percent of the crew workday (Above figures represent long-term averages and include preventive maintenance time.)

12.3.3 Types of On-Orbit Maintenance

The following categories of maintenance are based on either the urgency of the maintenance, the time frame, or the place the maintenance will be carried out.

- Preventive - Keeps item(s) in a specified condition by performing systematic inspection, detection, cleaning, repair and/or replacement of parts at preplanned, specified intervals
- Corrective - Restores an item to its original condition
- In-Situ - Performs repairs at the hardware site
- Contingency - Performs maintenance to restore a function which is vital to crew safety or vehicle integrity. May require immediate action

Note that based on the definitions above, there may be overlaps between different types of maintenance. For example, if corrective maintenance is being performed on an ORU and the ORU cannot be removed for servicing, then the maintenance is also in-situ maintenance.

12.3.4 Levels of On-Orbit Maintenance

The ISS program uses three levels of maintenance: organizational, intermediate and depot. Each succeeding level requires a higher level of skill and more complex tools and diagnostic equipment. Details on each level are provided in Table 12-1.

Table 12-1. On-orbit maintenance levels

Level (Location)	Skills	Equipment required	Example
Organizational (performed on orbit)	Minimal maintenance skills	Standard hand tools, some diagnostic equipment	Visual inspections R&R of some ORUs Periodic cleaning/servicing of equipment Periodic checks of equipment performance External adjust/align ORUs
Intermediate - (performed IVA on orbit or on ground)	Higher level of skill(s) than organizational maintenance	More support/diagnostic equipment than organi-zational maintenance	Removal and replacement of major hardware components and assemblies Removal and replacement of ORU components, (i.e., circuit card assemblies)
Depot - (normally performed on the ground)		Specialized equipment not available on orbit Extensive collections of spare parts Complex diagnostic equipment	Complete overhauling/rebuilding of equipment (such as failed circuit cards). Complex calibrations of equipment

An ISS Multiplexer/Demultiplexer (MDM) can be used to illustrate the various levels of OOM. If a defective MDM is removed and replaced with a spare MDM, then Organizational maintenance is being performed. If a defective MDM is removed, carried to the MWA, the MDM opened up, a defective circuit card removed and replaced with a spare circuit card, then Intermediate level maintenance is being performed. If the defective circuit card is then carried to the ground where a failed integrated circuit chip on the card is replaced with a spare chip, then Depot level is being performed.

Note that when possible, some ORUs or failed components of ORUs are returned to the ground where depot level maintenance is performed on the ORUs/components. Once repaired, the ORU/component can be returned to orbit as a spare ORU/component.

12.4 On-Orbit Maintenance Strategy

The ISS On-Orbit Maintenance strategy involves four elements: tools, spare parts, procedures, and training. Each of these elements is discussed below.

12.4.1 NASA MWA/IVA Tools

Maintenance Work Area: The MWA is basically a portable work table (approximately 36 inches wide by 25 inches deep) which can be folded and stowed inside a storage drawer. (See Figure 12-1). In its folded configuration, the MWA measures approximately 15 inches by 26 inches by 9.25 inches. It clamps to the seat tracks on either side of a rack and can be rotated either up or down, as desired. The term "seat track" refers to a type of slotted mechanism often used on commercial airplanes to adjust the position of the seats. The MWA can be used to restrain ORUs while maintenance is being performed in a number of ways. First, seat tracks are built into the surface of the table which allows an ORU to be held to the MWA by clamps and other devices that interface with the seat tracks. In addition, slots in the surface allow the restraint of ORUs with bungee cords. The MWA is planned to be flown on Mission 6A.

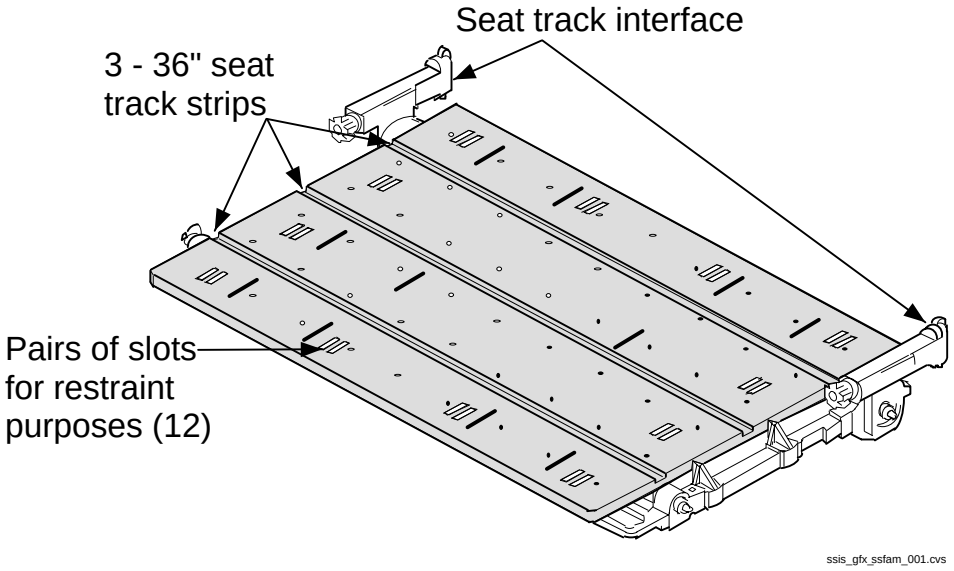

Figure 12-1. Maintenance work area (top view)

MWA Containment System: The MWA Containment System is a clear plastic enclosure designed to be used with the MWA to contain debris created by maintenance operations such as cutting, drilling, filling, or soldering. (See Figure 12-2). Rigidity is given to the enclosure by seven structural members, two arched members located at each end of the enclosure and five straight horizontal members which connect the two end pieces. When used, the enclosure and the structural members are removed from a storage drawer; the structural members are inserted into the plastic envelope and the entire structure is clamped to the surface of the MWA. When assembled, the containment system is approximately 34 inches wide by 24 inches deep by 26 inches high. Note that the MWA Containment System connects to the MWA in five locations: at each of the four corners and at a center baseplate in the "floor" of the containment enclosure. Other features of the MWA Containment System include: four gloveports, one in each end and two in one side; a 6-inch by 12-inch rigid, clear plastic viewing window; a 14-inch by 26-inch access flap for ORU access; a 6-inch by 12-inch filtered air intake; and two utility ports. The two utility ports are normally capped, but when necessary, either a vacuum hose or an electrical cable

can be interfaced to either of the ports. Although the plastic envelope is considered to be a consumable item, the seven structural members are intended to be reused. Presently the MWA Containment System is planned to be flown on Mission 6A.

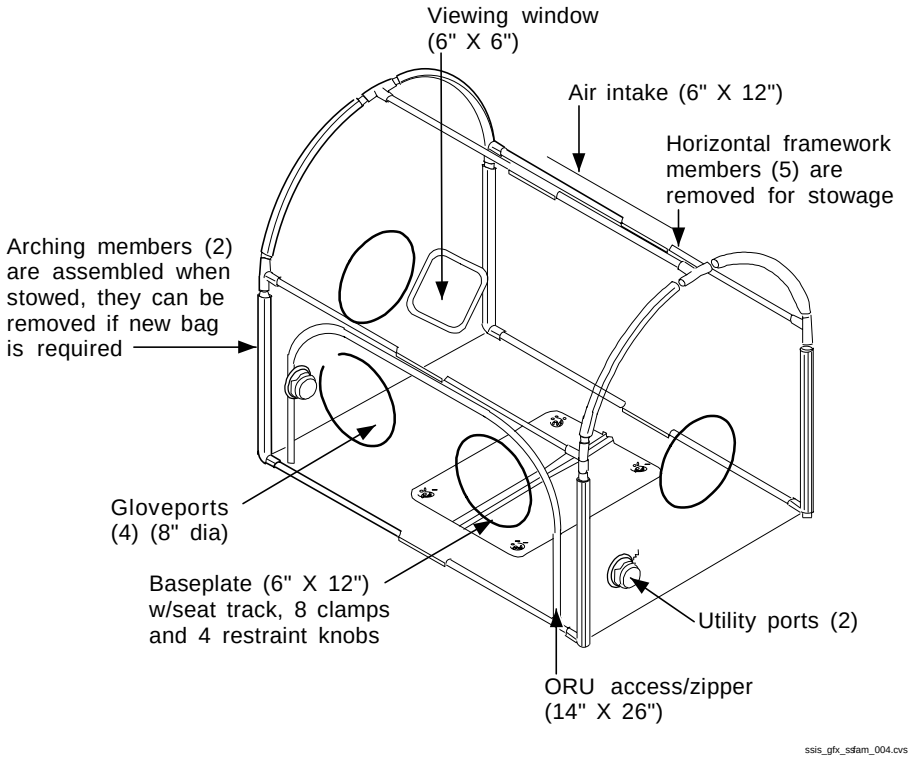

Figure 12-2. MWA containment system

On-Board Tools: Hand Tools - The ISS onboard tools are generally two types: hand tools and diagnostic tools. The hand tools can be further subdivided into EVA hand tools and IVA hand tools. The main differences between the two is EVA tools have special provisions for tethering and use by (EVA) gloved hands. (EVA tools are not discussed here). The IVA hand tools are basically the same type of common tools found in most automobile repair shops. The following is a list of typical types of IVA hand tools stowed in the ISS:

- Ratchets-powered/unpowered, torque, adapters, universal joints, breaker bars, extensions
- Sockets-regular/deep, Hex head
- Screw drivers - common-tip, Phillips head, jeweler's
- Wrenches - open/box end, L-shaped, Hex head
- Pliers - various types
- Metal working tools - hacksaw, bone saw, chisels, punches, files
- Hammer - deadblow ball peen hammer

There is more than one set of IVA hand tools on the ISS. It is anticipated that the following sets will also be on the ISS:

- IP hand tools - Each IP will have a hand tool set for their respective module(s) (RSA, ESA, NASDA)
- Payload tools - Each payload is expected to provide any special tools needed to maintain their payload
- Special tools - For certain ORUs, special tools are required to remove and replace the ORU. In most cases, these special tools are packed with the replacement ORU
- Specialty tool kits such as
  - Electrical repair tools
  - Fiber optics repair kit
  - Fluid line repair kit
  - Hose and cable kit (similar to shuttle kit)
  - Tap and die set
  - Sewing kit

The NASA IVA hand tool set is unique in that it contains both English and metric sized tools. (Most of the IP tool sets contain only metric-sized tools). This tool set contains most of the tools which are in the shuttle In-Flight Maintenance (IFM) tool set in addition to a large number of new tools. The NASA hand tool set will be carried to orbit on Mission 2A. It is housed in a Nomex storage bag which is stowed in the overhead storage rack in Node 1. Within the storage bag, the tools are grouped into “kits” containing like tools (for instance, all the sockets in one kit, all the screw drivers in another kit, etc.). Each kit is contained within a Nomex pouch identified by a single letter of the English alphabet. The identifiers, along with a general description of the contents of the pouch is printed on the outside of each pouch.

On-Board Tools: Diagnostic Tools - The diagnostic tools are primarily used to perform fault isolation. Generally, the procedure is to remove a defective ORU, carry it to the MWA, open it up and use the diagnostic equipment to pinpoint which electrical component of the ORU has failed and in what manner. Once the defective ORU component is replaced, the diagnostic equipment is again used to determine if the repair was successful. After this, the ORU is closed and returned to its original location.

If the ORU cannot be removed from its installed location, the diagnostic tools can also be carried to the ORU and the maintenance performed in-situ. A description of available diagnostic tools follows.

Scopemeter: The Scopemeter, presented in Figure 12-3, is a commercially available combination of multimeter and oscilloscope manufactured by the Fluke™ company. It can be used to measure voltages, currents and resistance and to detect, digitize, store, and display waveforms with frequencies up to 100 Mhz. With its special probes, it can also measure temperature, and pressure. The Scopemeter has a liquid crystal display and is powered from a rechargeable power pack. An adapter is being developed which will allow the Scopemeter to receive its power from a standard ISS Utility Outlet Panel (UOP). A Scopemeter will be carried to orbit on both Mission 2R (on a Progress resupply vehicle) and Mission 6A.

Figure 12-3. Scopemeter

Pin kit: The ISS Pin Kit, presently scheduled to be flown on Mission 6A, is housed in a Nomex pouch and has some of the same components as the present Shuttle Pin Kit. The main difference between the two kits is all the shuttle-unique items are removed from the ISS Pin Kit and ISS components added.

The ISS Pin Kit contains:

- Prefabricated jumper/test cables (in various wire gauges and lengths)
- Materials for manufacturing custom jumper cables (various gauges and lengths of wire and crimp-on connectors)
- Alligator clips, various type of test leads
- Assorted fuses

Logic Analyzer: The Logic Analyzer consists of a Portable Computer System (PCS), a Potable Computer Memory Card International Adapter (PCMCIA) card plugged into the PCS and LabVIEW software operating within the PCS. (See Figure 12-4) The PCMCIA card has numerous probes connected to it which allow the PCS to monitor several different points in a circuit, or several circuits, simultaneously. Although LabVIEW software has the capability to monitor any number of parameters, analog or binary, the Logic Analyzer application software is designed to monitor the logical state ("1" or "0", high or low, etc.) of particular points within a circuit or electronic component. The full capability of the Logic Analyzer will not be realized until Flight 6A.

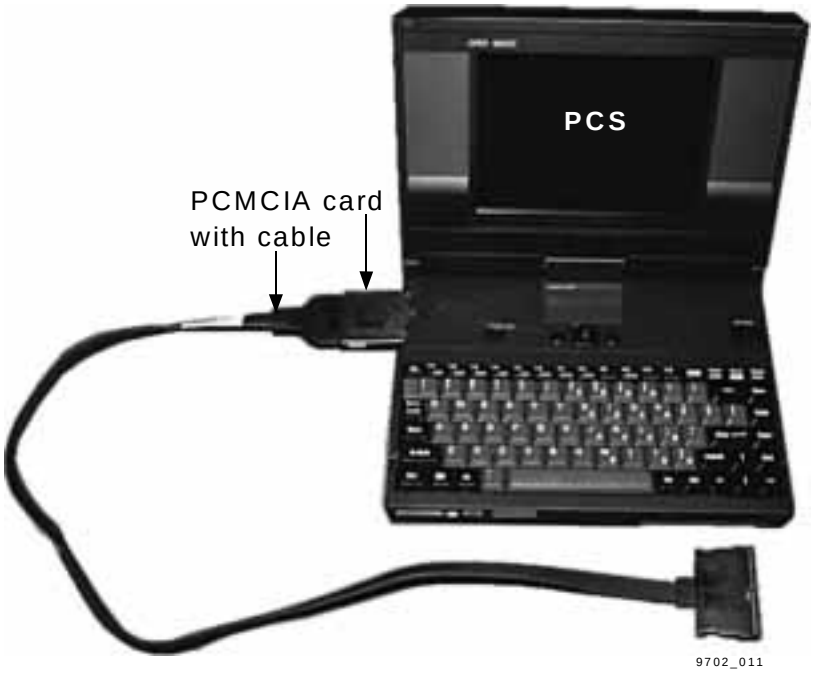

Figure 12-4. Logic analyzer

Function/Sweep Generator - The Function/Sweep Generator, (presented in Figure 12-5) generates standard waveforms (sine wave, saw-tooth wave, square wave, etc.) to diagnose electronic circuits and perform fault isolation. Generally, the function/sweep generator is used to inject a known, reference signal (wave) into a circuit and the output of the circuit is monitored with the scopemeter or the logic analyzer (depending on whether the circuit is an analog or a digital circuit). The ISS function/sweep generator is an off-the-shelf function/sweep generator which has been adapted to operate from 120 V dc power and repackaged in a new cabinet. As Figure 12-6 illustrates, the top of the cabinet has compartments to house the scopemeter, scopemeter attachments, and the logic analyzer PCMCIA card. In this configuration, the function/sweep generator is sometimes referred to as the "Diagnostic Caddy."

Figure 12-5. Function/sweep generator

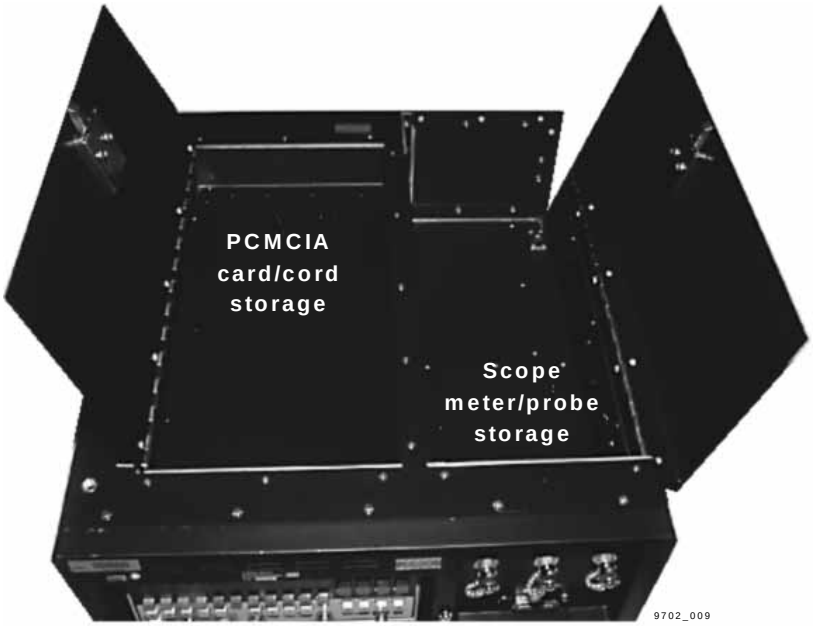

Figure 12-6. Diagnostic caddy

DC Power Supply: The DC Power Supply is designed to operate from a 120 V dc power supply. As shown in Figure 12-7, it plugs into a standard UOP and can be adjusted to provide voltages from 0-120 V dc and currents from 0-7 amperes. The dc power supply will be flown on Mission 6A.

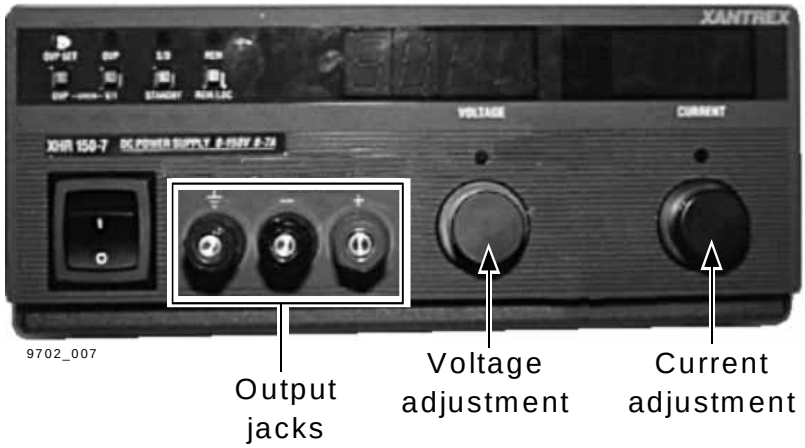

Figure 12-7. DC power supply

Power Strip: The Power Strip plugs into a standard ISS UOP and provides 4 UOP type sockets, each of which can be switched On and Off independently. It also has a removable fuse, as shown in Figure 12-8. Note that the four sockets on the power strip provide data connections as well as power. The power strip will be flown on Mission 6A.

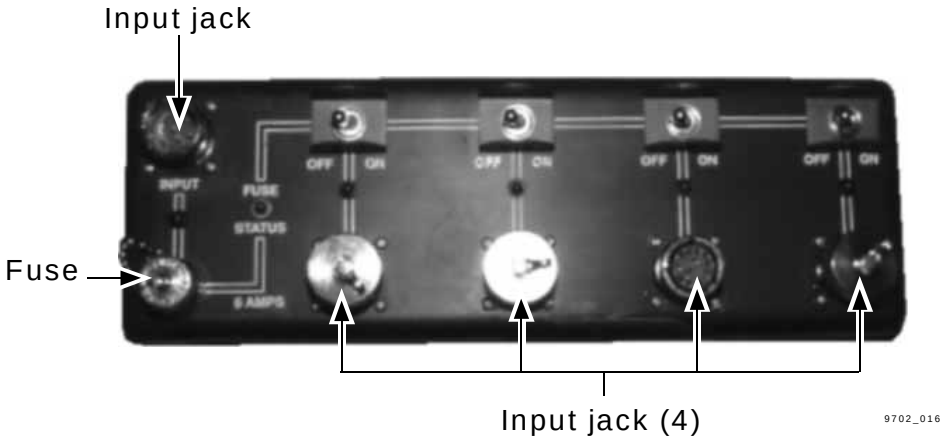

Figure 12-8. Power strip

12.4.2 Maintenance Logistics

Spares: As can be seen from the above description of ISS tools, the crew has a great deal of capability to diagnose and repair failed ISS ORUs and ORU components. Although some repairs can be performed by simply tightening a bolt or adjusting a seal, most ISS repairs require a spare ORU or spare parts for an ORU.

Maintenance logistics spare parts include: procurement; storage; inventory; transportation (both to the storage area and to the worksite); and tracking of ORU failure modes and lifetime.

For the ISS program, a quantity of selected spares were purchased even before any component of the ISS was launched. Due to financial considerations, it was impossible to provide spares for every ORU on the ISS. Therefore, the following factors were considered when determining which spares to purchase:

- The criticality of the ORU to crew safety, vehicle integrity, or mission success
- Mean Time Between Failures (MTBF) for the ORU in question (based on tests of a quantity of the ORU; the average length of time the ORU operates without failing.)
- The quantity of that particular type of ORU on the ISS
- The availability of operational "work-arounds" if the ORU fails
- The availability of launch vehicle volume and weight allowance to carry the ORU to orbit

A spare part purchased, based on the above criteria, and scheduled to fly on a future mission is referred to as a preplanned spare.

A spare, already onboard the ISS and available for future use, is referred to as a prepositioned spare. (The present plan is to have the equivalent of three racks of spares onboard the ISS by Mission 8A.)

If an ORU fails on the ISS and a spare ORU cannot be acquired in a timely manner, the required maintenance is postponed and the spare is referred to as a backlogged spare.

If an ORU performing a critical function fails, and another ORU of its type is available on orbit, and is performing a function deemed less critical than the first, the second ORU may be "borrowed" to perform the more critical function. The spare in this case is referred to as a borrowed (or "cannibalized") spare. When a spare becomes available, it is placed in the position of the second ORU; the borrowed ORU, performing the more critical function, is not replaced.

Ground Support of Maintenance Logistics: Although the Operations Support Officer (OSO) is the primary Mission Control Center-Houston (MCC-H) discipline concerned with OOM, almost every discipline in the MCC-H is involved in some aspect of OOM. The OSO performs the following activities on the ground in support of maintenance logistics:

a. Tracking of ORU failures

b. Determination of the availability of spare ORUs

c. Initiation of spare ORU procurement

d. Generation of maintenance procedures

e. Updating of maintenance databases

The primary tool the OSO uses to perform items b, d, and e is the Consolidated Maintenance Inventory and Logistics Planning (CMILP) system. CMILP is a software application contained within the Integrated Planning System (IPS) in the MCC-H. IPS is a ground-based system and is used to develop maintenance procedures and control parts inventory and has the capability to access the Logistics Support Analysis Records (LSAR) maintenance database.

On-Orbit Maintenance Prioritization: At any time during the lifetime of the ISS, there may be numerous ORUs which have failed. Some of these failures may be serious, while others may have less impact. With the limited resources available (particularly crew time) a process had to be developed which allowed prioritizing of these repairs to make the best use of the available resources. This process is projected to proceed as follows:

- The system operator in the MCC-H detects, or is informed of, a system anomaly and aids in performing Fault Detection Isolation and Recovery (FDIR) to the ORU level.
- The system operator declares the ORU as either
  - Failed
  - Operating in a degraded mode
- The ORU is placed on the Designated Item (DMI) list
- The DMI list is prioritized, based on
  - Station and Crew Survival
  - System Criticality
  - Availability of Spare ORUs
  - Crew time availability

12.4.3 Maintenance Procedures

Elements of a Procedure: A maintenance procedure is a sequenced set of steps that describe how to remove, replace, repair, inspect, calibrate, or adjust an ORU or ORU components. Most ISS core maintenance procedures contain the following eight basic elements:

- List of required tools/spare parts
- Safing steps - Removing electrical power, or pressure, from the maintenance site
- Access steps - Steps taken to get access to a failed ORU. This may require removing panels or rotating racks
- Remove steps - Removing the old part
- Replace steps - Installing the new part
- Check-out steps - Steps taken to ensure the new part works in its new location. This may require turning on power to the new part

- Close-out steps - Reinstalls any access panels which were removed for access
- Postmaintenance - Stowing the tools, and defective ORU and maintenance record keeping

Procedures Generation: Failures occur for which there are no predefined maintenance procedures; when this occurs, the necessary procedures are written "real time," as required.

Location of Maintenance Procedures: Some basic group of predefined procedures are stored onboard on a CD ROM or as a part of the System Operation Data File (SODF) and accessed by a PCS. Additional procedures are uplinked from the ground as they are required. As a minimum, the following types of maintenance procedures are stored onboard:

- Routine/Preventative Maintenance Procedures - These are performed on a relatively frequent basis
- Emergency Procedures - The crew needs immediate access to these procedures, when required

12.4.4 Maintenance Training

As we have mentioned before, crew training in maintenance techniques is an element that enhances our ability to make successful repairs on the ISS. All crewmembers receive basic and advanced training in OOM techniques. Selected members of the crew receive additional, increment-specific maintenance training. Since time does not permit training crewmembers on all possible OOM procedures, the emphasis is on teaching basic maintenance skills. However, some specific routine and critical maintenance procedures are covered in training.

Examples of basic maintenance skills

- Tool Usage
  - Hand tools
  - Soldering
  - Gluing
  - Cutting/swaging
- Hardware Access
  - Rack tilt-down
  - Close-out panel removal
- Procedure Execution
  - Only the most critical and the most common procedures are taught on the ground

IPs and payload providers are responsible for providing crew training for their specific modules/equipment. This training takes place at their respective facilities (based on mockup

fidelity). NASA and RSA may coordinate the teaching of basic maintenance skills (i.e., NASA might teach gluing skills; RSA might teach soldering skills, etc.).

12.5 Summary

- ISS OOM has a completely different philosophy than IP. Permanent repairs must be made on orbit.
- IPs are responsible for maintenance activity on their respective components of Station hardware.
- The four types of OOM are: preventive, corrective, in-situ, and contingency
- The three levels of OOM are: organizational, intermediate, and depot
- Our philosophy for ISS OOM is to maintain, repair, and replace ISS ORUs with the goal of returning the affected systems to their original configuration. This goal is obtained by using
  - Tools
    - Hand tools
    - Diagnostic tools
  - Logistics
    - A supply of spare ORUs
    - Planning/prioritization
  - Procedures
    - Extensive collection of prepared procedures
    - Stored on PCS or uplinked, as needed
  - Training - All crewmembers well trained in basic/advanced maintenance skills
    - Emphasis on maintenance skills, not procedures
    - Selected maintenance procedures

The following is a typical scenario followed in the event of an ORU failure, indicating the responsibilities of the various disciplines involved:

- Crewmembers
  - Report defective ORU(s)
  - Assist flight controllers in troubleshooting “questionable” ORU
- Systems Operator/Flight Controller
  - Troubleshoots his (or her) system(s)

  - Determines which ORU has failed
  - Puts affected system/ORU in safe configuration
- Operations Support Officer (OSO)
  - Prioritizes maintenance tasks
  - Writes OOM procedures
  - Coordination of maintenance procedures among IVA, EVA, and EVR disciplines
  - Determines if appropriate spare ORU is onboard
  - Submits list of failed ORUs and suggested manifest changes to Maintenance and Repair IPT
- Maintenance and Resupply IPT
  - Procures spare ORUs (in response to OSO's request)
  - Manifests spare ORUs
- Crewmembers
  - Remove and replace failed/degraded ORU

Questions

Identify the type and location of OOM being performed in the following tasks. Choose the best fit, since activities may overlap.

On-Orbit Maintenance (OOM)	Tasks
Types a. Preventative b. Corrective c. In-Situ d. Contingency **Methods** I. IVA II. EVA III. EVR	1. ____ ____ Internal water loop repair 2. ____ ____ Module pressure vessel leak repair 3. ____ ____ Scrub module internal walls 4. ____ ____ Remove and replace malfunctioning MDM 5. ____ ____ Module filter cleaning

Section 13
Flight Crew Systems Overview

13.1 Introduction

The purpose of this section is to provide a broad, introductory overview of Flight Crew Systems (FCS) Subsystems and hardware.

As defined by the International Space Station (ISS) Program, FCS consists of the following categories of equipment:

- Restraints and Mobility Aids
- Portable Emergency Provisions
- Housekeeping and Trash Management
- On-Orbit Maintenance (OOM)
- Lighting
- Stowage
- Decals and Placards
- Closeouts
- Crew Health Care System (CHeCS)

- Personal Hygiene Equipment
- Wardroom
- Crew Privacy
- Operational and Personal
- Galley and Food System
- Inventory Management

This section covers all these categories with the exception of On-Orbit Maintenance (OOM), CHeCS, and Inventory Management, which are covered elsewhere.

This section is organized topically, by subsystem. The subsystems that are covered first (above the dashed line) include hardware that is present in both the U.S. and Russian segments. The latter subsystems are present only in the Russian segment prior to U.S. Hab module outfitting. The majority of discussions on hardware details covers the U.S.-provided hardware. In most cases, the Russian-provided hardware is functionally similar, although the details may differ. Some details on Russian hardware are discussed here, however, specific details on Russian hardware are provided by Russian-supplied training.

This section discusses the FCS hardware that is present up to and including Assembly Flight 8A, according to Revision C of the ISS Assembly Sequence.

13.2 Objectives

After completing this section, you should be able to:

- Identify FCS Subsystems and hardware
- State the U.S. and Russian contributions of crew systems through Flight 8A
- Describe the purpose of FCS hardware
- Identify the interfaces FCS has with other ISS systems

At the end of this section, there are ten questions students can use to check their understanding of the material.

13.3 Restraints and Mobility Aids

13.3.1 Purpose

Restraints and Mobility Aids (R&MAs) are provided to support Intravehicular Activity (IVA) personnel restraint, IVA equipment restraint, and IVA personnel mobility. R&MAs interface with the rack and module secondary structure for attachment points. R&MAs provide IVA body support without sacrificing crewmember maneuverability, and accommodate the human body's zero-g body posture and the inherent freedom associated with weightlessness. R&MAs are repositioned on orbit to meet changing workstation and translation requirements. R&MAs are located at frequently used workstations and translation paths. Portable R&MAs use a common attach mechanism (seat track), and are easily removed to allow for rack pivoting and to provide maximum aisle clearance.

13.3.2 Hardware Components

The hardware consists of numerous types of equipment restraints, personnel restraints, and mobility aids.

13.3.2.1 *Equipment Restraints*

Equipment restraints include tether straps, bungees, equipment bags, equipment anchors, cable ties, panel covers, Portable Computer System (PCS) desk, and Velcro. The tethers are cloth straps with carabiner hooks on each end. There are fixed length tethers, which are 14 inches long, and adjustable length tethers, which can extend up to 68 inches long. Figure 13-1 shows an adjustable tether.

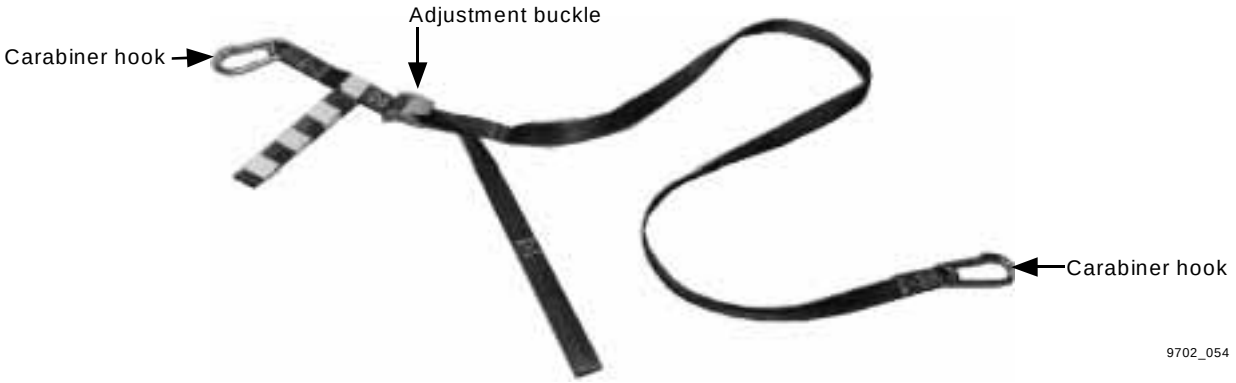

Figure 13-1. Adjustable tether

The bungees are elastic cords with carabiner hooks on each end. Several different lengths of bungees are provided. Figure 13-2 shows three types of bungees.

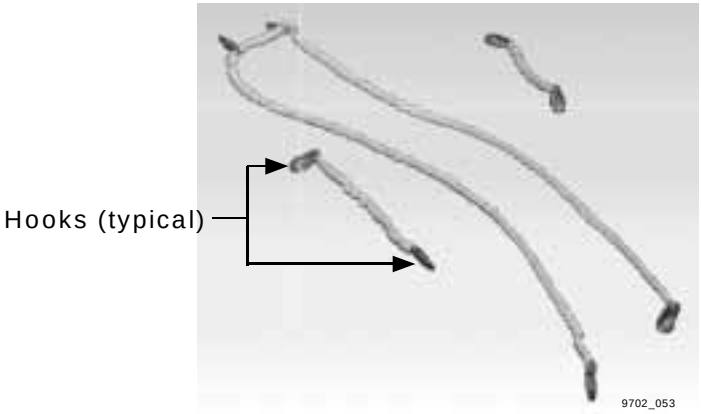

Figure 13-2. Bungees

Equipment bags are cloth bags provided to restrain loose equipment. The bags have several compartments and internal, moveable dividers to accommodate a variety of items. The cloth lids to the different compartments are mesh to facilitate viewing of the bag contents.

Although not formally part of the R&MA Subsystem, the seat track (Figure 13-3) is the primary mounting interface for R&MA hardware.

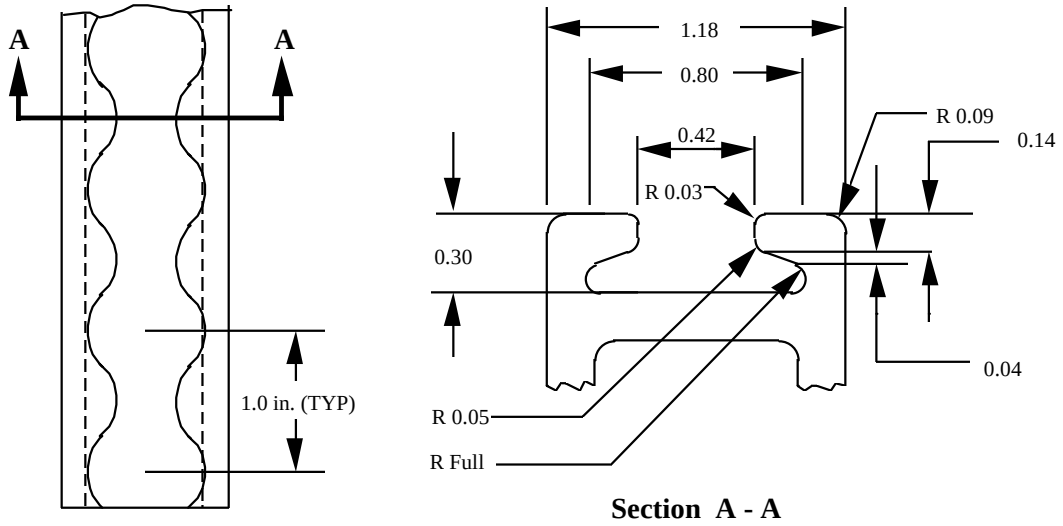

Figure 13-3. Seat track details

The seat track provides a common interface between the R&MA hardware and all U.S.-, European-, and Japanese-provided elements and racks. The seat track is part of the rack structure, and all racks have seat tracks mounted on their front face. Additionally, small sections of seat track ("seat track buttons") shown in Figure 13-4, are mounted on the standoff secondary structure to support maintenance activities in the standoff areas, and in other areas throughout the modules (see Figure 13-5). The seat track is extruded aluminum and is the passive half of the attachment interface.

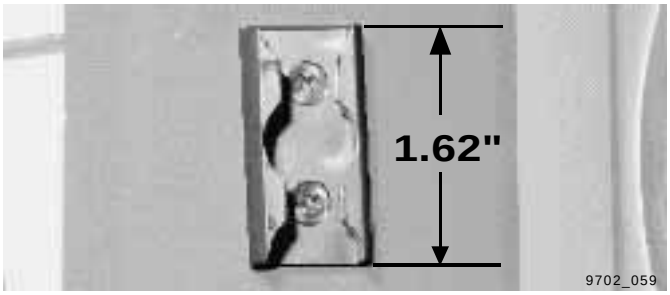

Figure 13-4. Short seat track button

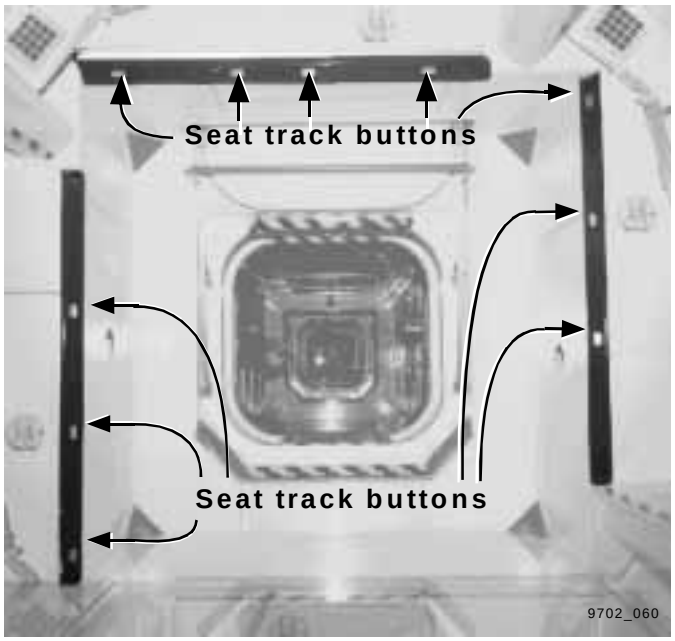

Figure 13-5. Node FWD endcone/alcove area

Anchors and attachments provide moveable secure anchors and attach points for restraining crew and equipment. This hardware includes Seat Track Equipment Anchors (STEA), Handrail Equipment Anchors (HEA), and Articulating Posts. Anchors and attachments are made from aluminum and attach to either the seat tracks or handrails.

As its name implies, the STEA is an equipment anchor that attaches to the seat track. The STEA has a tether ring, a hex stud socket, and a mechanism for attaching to the seat track (Figure 13-6). The tether ring is used as an anchoring point for tethers. The hex stud socket provides an anchor point for any hardware possessing a hex stud (Anchor Foot Restraint, Articulating Post, camera mounts, etc.).

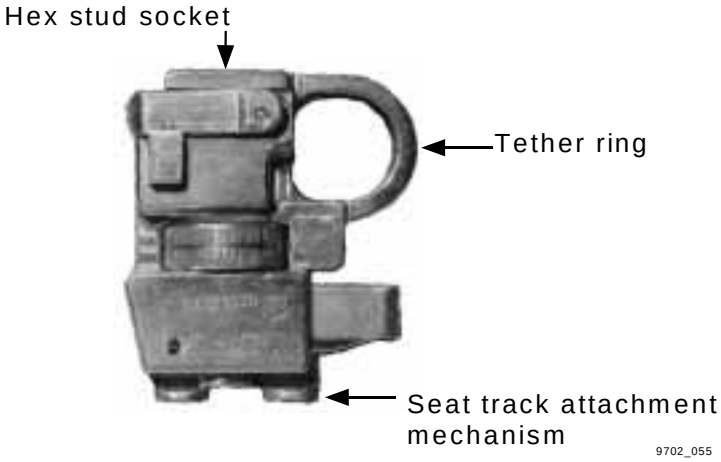

Figure 13-6. STEA attached to seat track

The HEA, like the STEA, is an equipment anchor containing a tether ring and hex stud socket (Figure 13-7).

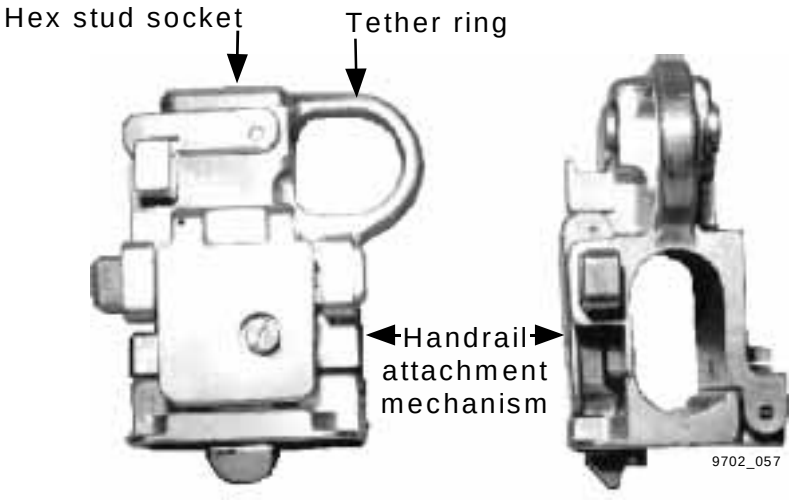

Figure 13-7. Handrail equipment anchor

Rather than connecting to a section of seat track, the HEA attaches to a handrail (Figure 13-8). The tether ring and hex stud socket of the HEA are identical to those on the STEA, and serve the same purposes.

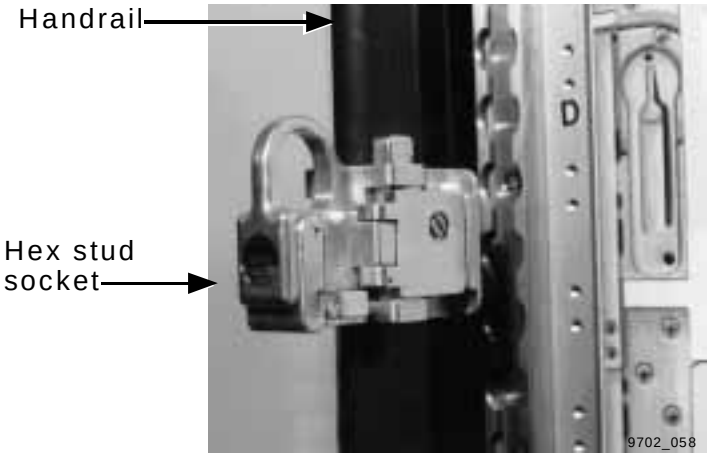

Figure 13-8. HEA attached to handrail

The Articulating Post provides equipment with a relatively fixed and stable structural anchor at any position or orientation which may be desired. The post includes two articulating joints, three post sections, a hex stud at one end (which interfaces with the STEA or HEA), and a socket at the other end which attaches to the equipment. Two or more posts may be used in series to increase the standoff distance from the anchor attachment or to increase the degree of articulation or orientation.

The PCS desk provides equipment with a stable mounting surface to a seat track. The desk top surface can be positioned according to the crewmembers' preference. A Cable Tie provides a means of securing cables to a seat track in order to keep the cables away from the working area.

Although not used as extensively as it is on the Shuttle, Velcro is used to restrain small items on ISS. Rack panel covers, which attach to seat track and cover a portion of a rack front, are provided to give the crew more surface area for restraining items. The panel covers have small pieces (typically 2 inches by 2 inches square) of Velcro adhered to them.

13.3.2.2 *Personnel Restraints*

Personnel restraints consist of Long-Duration Foot Restraints (LDFRs), Short-Duration Foot Restraints (SDFRs), Anchor Foot Restraints (AFRs), Torso Restraints, and Long Duration Crew Restraints (LDCRs).

The LDFR (Figure 13-9) provides restraint for extended-length and/or heavy-duty tasks. The LDFR is mounted to the seat track on rack fronts. Its primary use is at workstation locations.

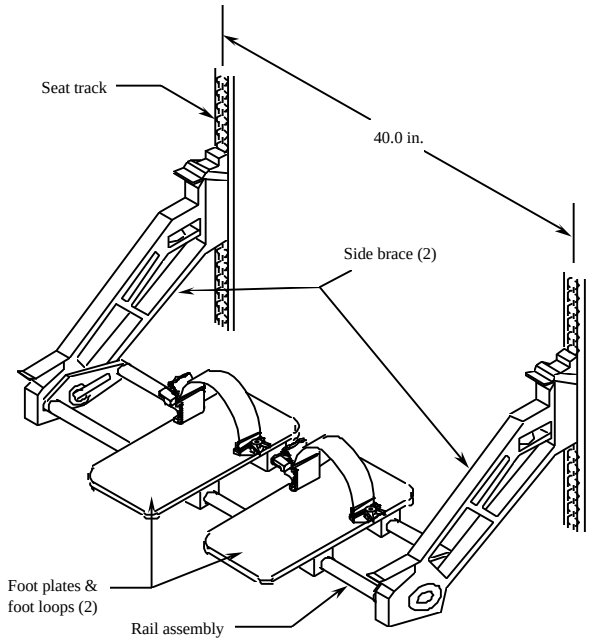

Note: Hole pattern on foot plates not shown

Figure 13-9. Long duration foot restraint

The SDFR, shown in Figure 13-10, supports short-duration tasks by providing features for easy ingress/egress while providing sufficient restraint to keep crewmembers from floating away from the work area. Each SDFR consists of a metal foot plate, cloth foot loop, and a clamp mechanism for attaching it to handrails. SDFRs are used in areas that do not require high force/torque applications or long periods of two-arm activity.

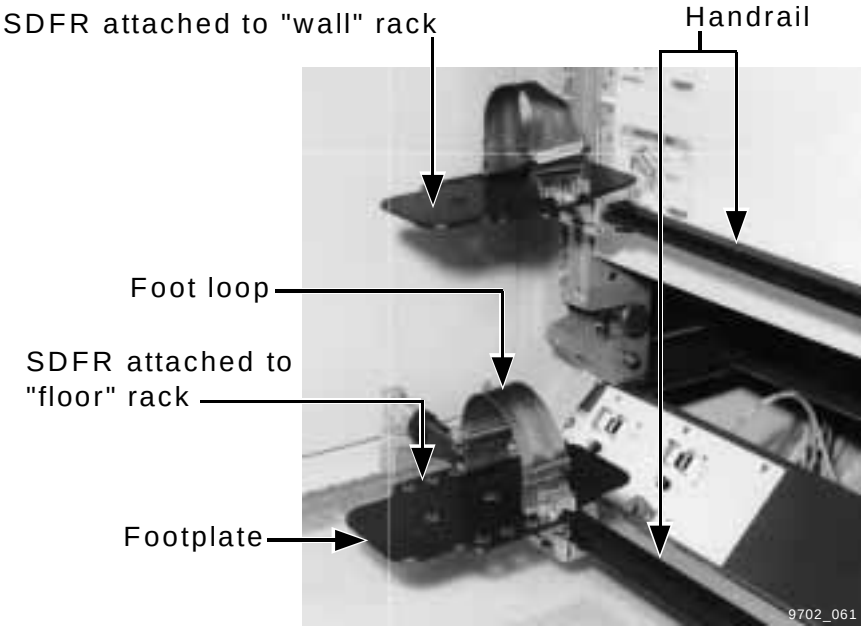

Figure 13-10. SDFR attached to handrails

Like the SDFR, the AFR supports short-duration tasks. The AFR consists of an aluminum foot plate similar to the foot plate of the SDFR. Rather than attaching directly to a handrail like the SDFR, the AFR uses a hex stud for attaching to the socket of the STEA or the HEA. This attachment scheme allows foot restraints to be located wherever a small section of seat track is available.

The torso restraint can be used in place of, or in addition to foot restraints to provide additional crew restraint. It is worn around the waist by the crewmember. The torso restraint can be used to restrain crewmembers performing maintenance tasks (which require high force/torque application) or robotics tasks (which require two hands and precise body positioning). The restraints have aluminum extension rods which have hex studs on the ends. The hex studs interface with the equipment anchors described above.

The LDCR is provided as an alternative to the LDFR. It attaches to the LDFR rail and consists of foam rollers and an arm. The restraint is used by placing the feet between two rollers and placing the other roller behind the knee.

13.3.2.3 *Mobility Aids*

Mobility aids (Figure 13-11) consist of removable handrails that allow the crew to move freely from one area to another. These handrails provide convenient handholds, attachment points for various crew and equipment anchors and tethers, and mounting provisions for the SDFR. Handrails attach to rack fronts through the seat track interface. Three different length handrails are provided: 41.5 inches long, 21.5 inches long and 8.5 inches long. The 41.5-inch handrails are long enough to span the width of a rack, and can be mounted parallel or perpendicular to the seat track. The 21.5-inch handrails are provided for the primary translation paths, and in the areas around hatches. The 8.5-inch handrails are intended to be used on secondary translation paths, as portable mobility aids, and as equipment handles.

Figure 13-11. Handrails

The Rack Handle Assembly (RHA), shown in Figure 13-12, is provided as an equipment mobility aid to facilitate on-orbit rack translation. Two rack handles are used simultaneously on the top and bottom surfaces of the rack to provide for two-person rack translation. The RHA is attached to the rack via quarter-turn fasteners. The handle interface is located in line with the rack center of mass to aid in control of the rack. The RHA is stowed while not in use.

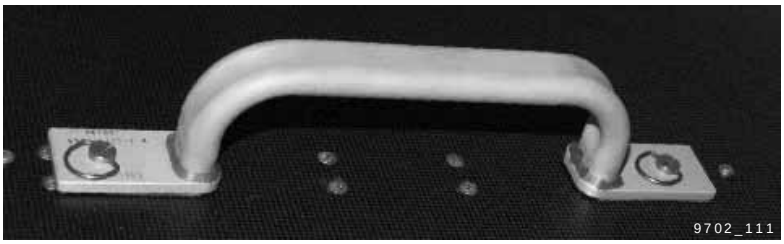

Figure 13-12. Rack handle assembly

Figure 13-13 shows the typical use of R&MA in a module.

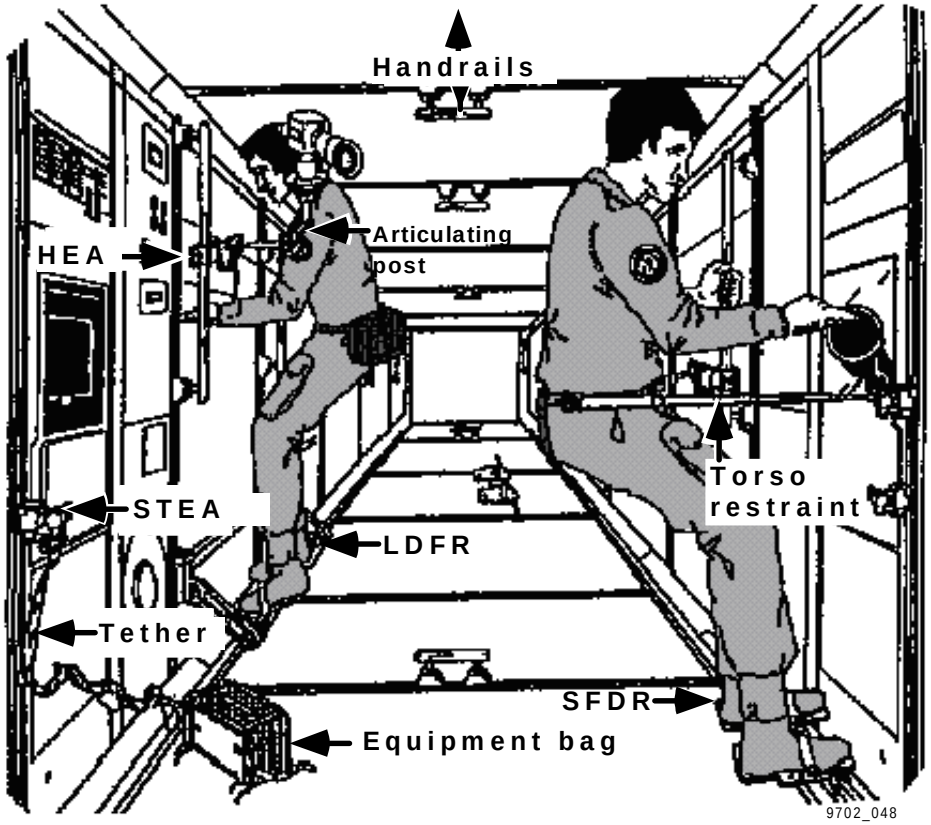

Figure 13-13. Restraints and mobility aids use

13.3.3 Russian R&MAs

R&MAs in the Russian segment are different from those in the U.S. segment. Much of the equipment restraint is provided by bungees. These bungees are also used extensively for mobility aids. Foot bars run along the length of modules, near the floor, and are used by slipping the foot under the bar.

13.4 Stowage

13.4.1 Purpose

The Stowage Subsystem provides the packaging, containers and restraints for all loose crew and payload/user equipment, supplies and consumables, trash, and hardware replacement units stowed within the Space Station elements.

13.4.2 Hardware Components

The Stowage hardware consists of stowage racks, stowage lockers, stowage trays, Aisle Stowage Containers (ASCs), Resupply Stowage Platforms (RSPs), and soft stowage bags. Stowage racks (Figure 13-14) consist of a rack structure, a stowage locker structure and stowage trays.

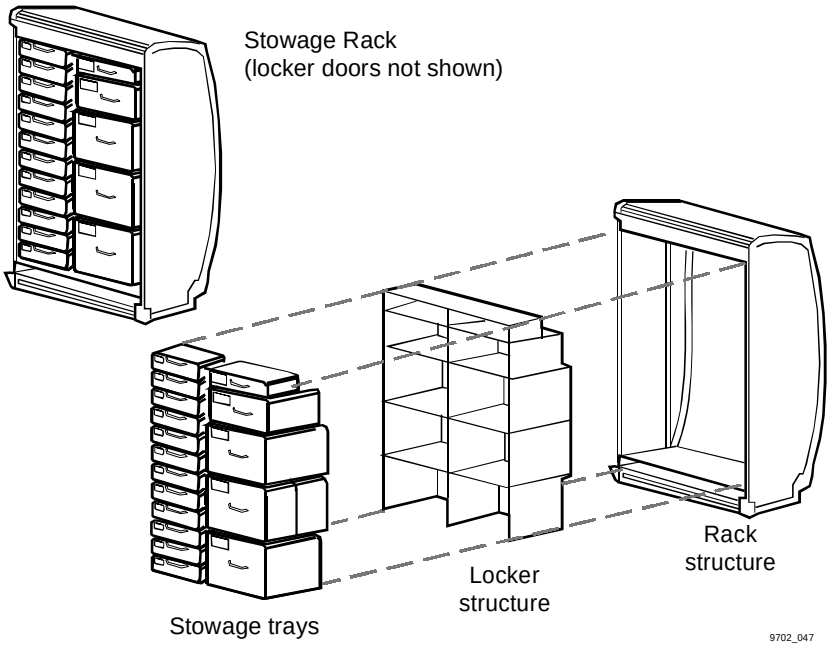

Note: Locker doors not shown.

Figure 13-14. Stowage rack

The stowage tray is the main "module" for stowing items. The trays vary in length and height (all are roughly 17.5 inches wide). A single high tray is 5.25 inches tall, a double is 10.5 inches, and a triple tray is 15.75 inches. The different lengths are 10 inches, 17 inches, 30 inches, and 34 inches. Through different combinations of height and length, a variety of sizes of trays are provided to accommodate many different stowage configurations. The locker structure transfers the launch and landing loads to the rack structure (rather than having the trays take the loads). Like the trays, the lockers have different heights and lengths. The sizes are such that a triple high, 34-inch long locker can accommodate different combinations of trays: a triple-high, 34-inch long tray; or 3 single-high, 34-inch long trays; or 1 double-high, 34-inch long tray and 1 single-high, 34-inch long tray; or 6 single-high, 17-inch long trays; etc.

Other hardware used for stowage are Resupply Stowage Platforms (RSPs), Aisle Stowage Containers (ASC) and ASC softpack stowage bags. The RSPs are metal structures that attach to the Mini-Pressurized Logistics Module (MPLM) rack attach points and carry soft stowage bag. The ASCs are metal structures that attach to the front of stowage racks in the MPLM. Both the RSPs and ASCs have attach points for mounting ASC softpack stowage bags and oversized items that cannot be accommodated in stowage trays. The ASC softpack bags are 38.5 inches by 19 inches by 17.8 inches, and can accommodate the volume of seven single high, 17-inch long stowage trays. The RSP can accommodate the ASC softpack and Shuttle soft stowage bags (i.e.,

airlock stowage bags, which are 47 inches by 21 inches by 34 inches). The RSPs and ASCs are intended for use during logistics flights only, and are not permanently used on orbit.

13.4.3 Russian Stowage

Some stowage in the Russian modules is provided behind panels along the walls, with the panels being secured with screws, or in some modules, the panels are hinged doors. Some specialized stowage areas are designed to conform to stowed items and there is some standardized stowage for food and clothes. Much of the stowage in the Russian segment is in the Docking and Stowage Module.

13.5 Portable Emergency Provisions

13.5.1 Purpose

The Portable Emergency Provisions (PEPs) Subsystem provides hardware to ensure crew survival in the event of any single failure, including the complete loss of any one pressurized element.

13.5.2 Hardware Components

The PEPs subsystem is comprised of Missed Resupply Provisions and Portable Breathing Apparatuses (PBAs). Note that Portable Fire Extinguishers (PFEs) also support the function of crew survival, but are part of the Environmental Control and Life Support System (ECLSS) Fire Detection and Suppression (FDS) system. See the ECLSS section for a discussion of the U.S. PFE.

Additional food, waste and trash management supplies, personal hygiene supplies and clothing are stowed on orbit as “Missed Resupply Provisions.” These provisions can support the crew 45 days past the nominal mission duration. Missed resupply provisions are located strategically so as not to occupy high-traffic stowage volumes. Also, the missed resupply provisions are distributed throughout the Station modules to minimize the impact of the loss of any one module. The missed resupply provisions food items require water and interface with the onboard water system. The total weight of assembly complete missed resupply provisions is approximately 1077 lbs, and the total volume is approximately 90 cubic feet.

In addition to the missed resupply provisions, PEPs also provides a PBA (Figure 13-15) which sustains the crew in an emergency such as fire, environmental contamination, or module depressurization.

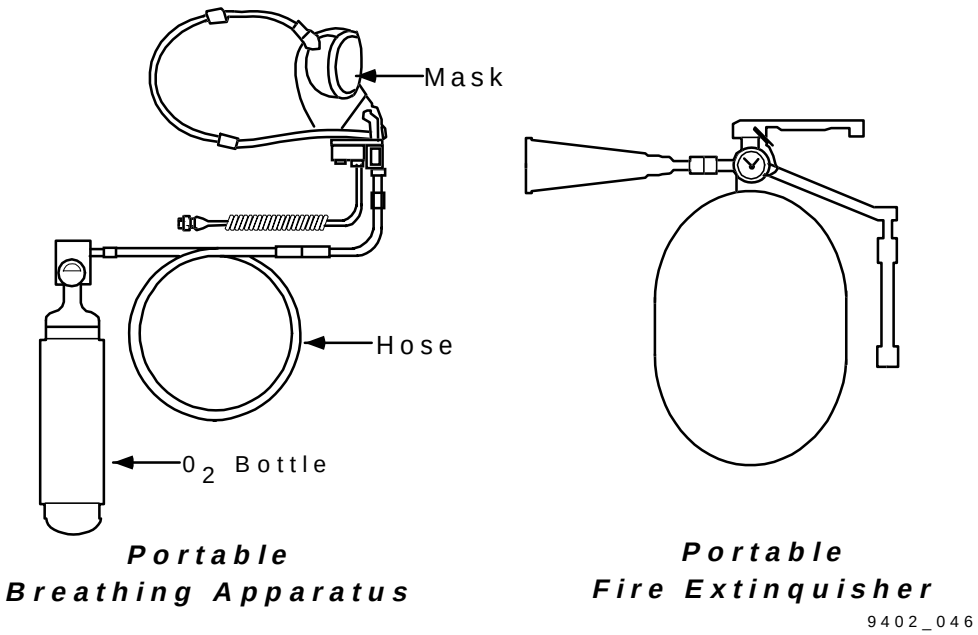

Figure 13-15. Portable emergency provisions

The PBA protects the wearer's face and eyes, and provides 15 minutes of 100 percent breathing Oxygen (O_2) at a flow rate of 18 liters per minute (the PBA can support a maximum flow rate of 90 liters per minute). The PBAs may be connected to the Station ECLSS O_2 distribution system and used for contamination clean-up tasks which take longer than 15 minutes.

The PBA consists of a portable O_2 bottle assembly, a Quick Don Mask (QDM) and connecting hose, and an extension hose and tee. A microphone and earphone are built into the mask, and the PBA interfaces with the Internal Audio System so the crewmembers can maintain communication with each other and the ground during emergencies requiring a PBA.

13.5.3 Russian PEPs

Russian Segment PEPs consist of breathing masks and fire extinguishers. The masks provide O_2 from a solid source and can last several hours. The O_2 is provided by a chemical reaction with the crewmember's exhaled air. The fire extinguishers use an aqueous foam (mostly water, and some foaming agent) propelled by gaseous nitrogen.

13.6 Decals and Placards

13.6.1 Purpose

Decals and placards are provided throughout the modules to display crew instructions, procedures, and location coding nomenclature.

13.6.2 Hardware Components

Decals and placards are used for displaying identification information, operating instructions, location coding information, and stowage labeling. Racks, stowage trays and their contents are identified and labeled, as are individual parts, to assist in inventory control. Failed and expended items are also labeled.

Trays are labeled with stowage tray cards (Figure 13-16), which include a listing of the contents of the tray, a graphical representation of the tray configuration, and its stowage location. The card is folded and therefore has four surfaces (inside top and bottom, and outside top and bottom) on which different stowage configurations and locations can be represented.

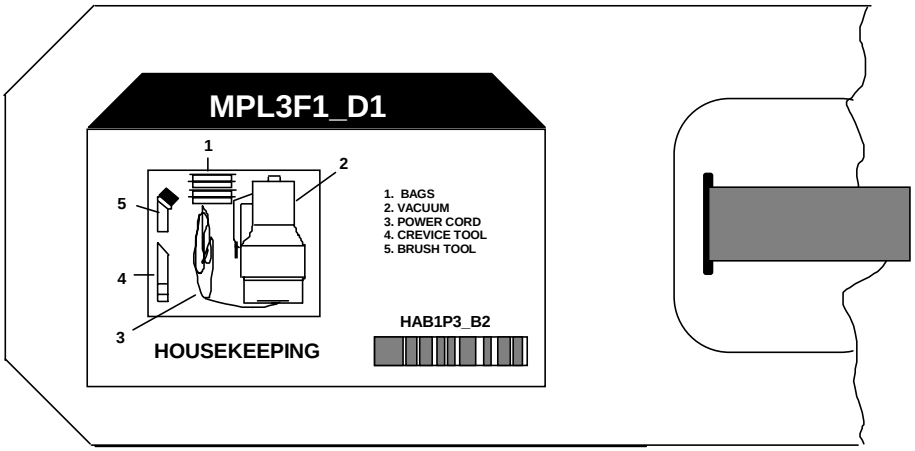

Figure 13-16. Stowage tray card

Instructional, procedural, and safety information can be relayed via decals applied to equipment. Figure 13-17 shows decals that are on the common hatches. These decals provide the crew with information pertinent to hatch operations.

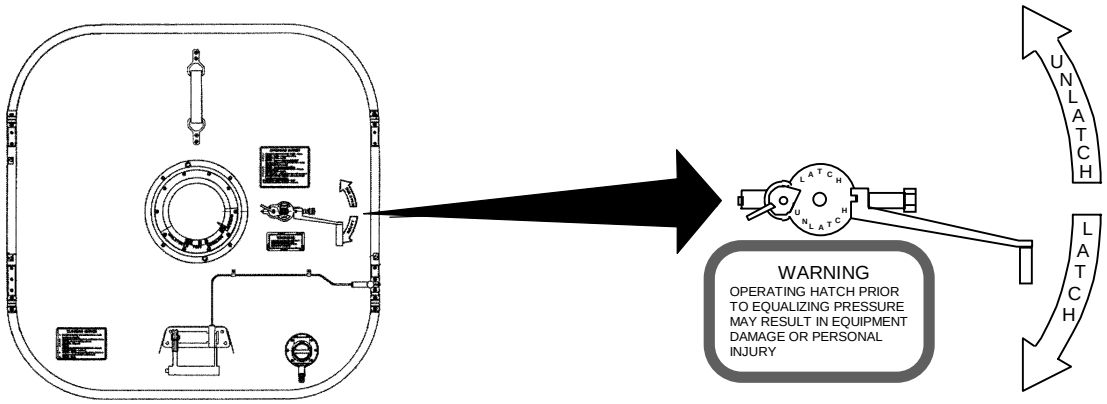

Figure 13-17. Hatch decal

All labeling normally visible to the crew is required to be in English (including those in the Russian Segment). A secondary language is permissible. However, the secondary language must be at least 25 percent smaller than the English label and cannot obstruct the English label.

13.7 Housekeeping and Trash Management

13.7.1 Purpose

Housekeeping and Trash Management equipment and supplies are provided to facilitate routine cleaning and trash management (any payload or experiment that uses reactive or hazardous materials must provide clean-up and/or isolation equipment and supplies).

13.7.2 Hardware Components

The hardware consists of a portable wet/dry vacuum cleaner (Figure 13-18) and attachments, wipes, cleansers, and trash collection bags and bag liners.

The wet/dry vacuum cleaner is powered by the 120 V dc utility outlet ports (part of the Electrical Power System (EPS)), and provides for collection of loose, wet or dry debris and fluids. The vacuum cleaner can be used for cleaning ECLSS filters, removal of free-floating fluids, and collecting debris. Various attachments are provided to accommodate a variety of cleaning tasks. Disposable vacuum bags are also provided.

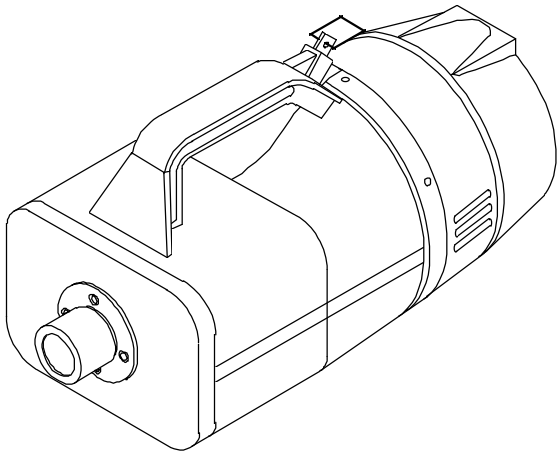

Figure 13-18. Wet/dry vacuum cleaner

Six different types of wipes are provided for housekeeping: dry wipes (paper wipes), durable wipes (dry fabric), detergent wipes (paper impregnated with a mild detergent), disinfectant wipes (paper wipes impregnated with a disinfectant), utensil detergent wipes, and utensil sanitizing wipes. The wipes are packaged in cartridges, which are loaded into a dispenser. The dispenser has a sealing lid to minimize evaporation of the impregnated material.

Detergent pouches are also provided to contain and dispense detergents, surfactants, or disinfecting agents.

Portable trash bags are located throughout the modules via the seat track. The bags are easily removable and are lined with bag liners. Once the liners are full of trash, they are closed and stowed for eventual disposal.

13.7.3 Russian Housekeeping Supplies

The Russian segment is provided with a vacuum cleaner and wipes similar to those on the U.S. segment.

Trash (including used clothing and linens) in the Russian segment is collected and stowed in empty food containers and special sealable bags. These are then disposed of in the Progress

vehicle.

13.8 Closeouts

13.8.1 Purpose

Closeout panels and seals are provided to segregate internal volumes for light, noise, and particulate control and for aesthetic value.

13.8.2 Hardware Components

The closeouts hardware (Figure 13-19) includes closeouts associated with racks (rack seals, standoff closeouts, utility interface panel closeouts), rack volume closeouts, endcone closeouts, Common Berthing Mechanism (CBM) vestibule closeouts, and window shades.

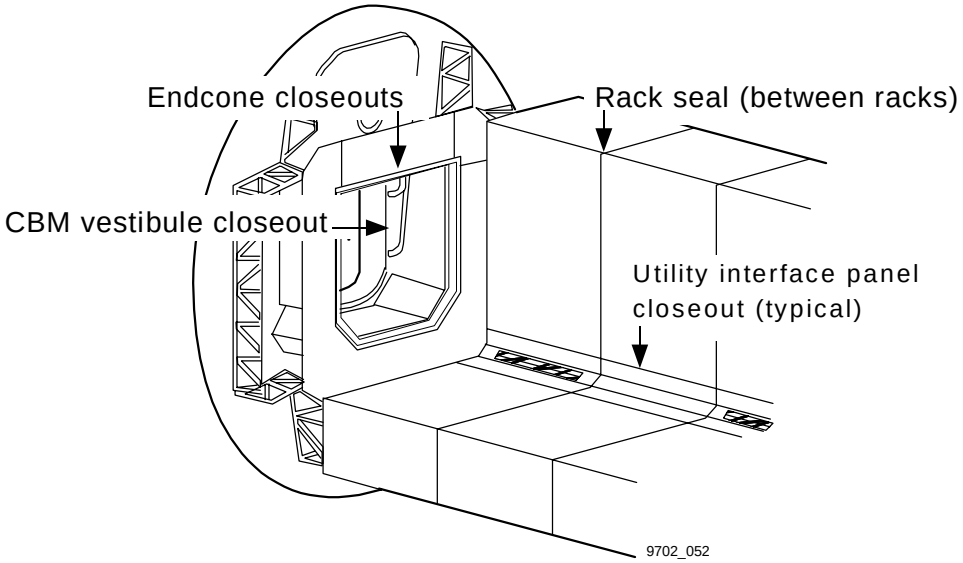

Figure 13-19. Closeout panels (typical)

13.9 Lighting

13.9.1 Purpose

Lighting equipment is provided to facilitate productivity.

13.9.2 Hardware Components

Lighting equipment consists of general lighting, portable utility lighting, and emergency egress lighting. All the lighting hardware components interface with the EPS for power.

The general lighting is provided by General Luminaire Assemblies (GLAs) (Figure 13-20) located in the modules. There are 12 GLAs in the Lab, and 8 in Node 1.

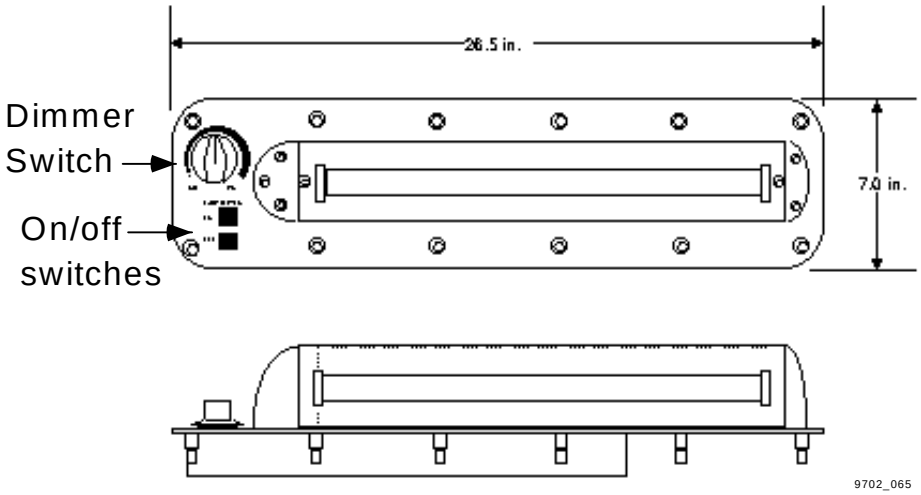

Figure 13-20. General luminaire assembly

The Portable Utility Light (PUL) provides supplemental lighting as needed. For example, during a maintenance activity behind a rack, a PUL can be mounted (using the equipment anchors described in 13.3.2.1) to provide more illumination in the area.

Emergency Egress Lights (EELs) are mounted in the module endcones to identify the egress path to the escape vehicle. The lights are strips of Light Emitting Diodes (LEDs) which are powered by batteries. The batteries are constantly charged, and the lights turn on only if there is a total loss of power to module.

For more information on the Lighting System, refer to JSC-36284, Lighting C 21002.

13.10 Personal Hygiene

13.10.1 Purpose

Personal Hygiene equipment and supplies are provided to facilitate personal hygiene and metabolic waste collection.

13.10.2 Hardware Components

The Service Module (SM) contains a waste collection compartment and hygiene supplies (washcloths, soap, shampoo, razors, toothbrushes, toothpaste, etc.).

The waste collection compartment contains a commode/urinal which is used to collect urine and fecal matter.

Personal hygiene (bathing, shaving, oral hygiene, etc.) is also accommodated in the SM.

The personal hygiene equipment requires electrical power, and has an interface to the onboard water processing system.

13.11 Operational and Personal Equipment

13.11.1 Purpose

Operational and Personal Equipment (O&PE) is used to accomplish routine daily activities (both regular-duty and off-duty activities) in operating the Station.

13.11.2 Hardware Components

The O&PE hardware includes clothing, cameras, calculators, pens and pencils, recreational equipment (books, tapes, CDs, tape players, CD players, games), and a battery charger. Much of the recreational equipment is standard, off-the-shelf equipment, and runs off of rechargeable batteries (hence the battery charger). Some of the O&PE hardware requires power from the EPS.

Current agreements state that NASA provides O&PE and personal hygiene supplies for astronauts, and the Russian Space Agency (RSA) provides supplies for cosmonauts. However, the International Space Station Program Office (ISSPO) is working toward commonality agreements.

13.12 Wardroom and Galley and Food System

13.12.1 Purpose

The Wardroom and Galley and Food systems provide nutritional support for the crew.

13.12.2 Hardware Components

The hardware includes wardroom area, food, food preparation hardware (food warmers, food trays, utensils, etc.). The wardroom table/galley is located in the SM, and provides an area for preparing and consuming meals. The table includes crew and equipment restraints, and has recessed wells for food warming. The wardroom area also includes a potable water dispenser, which dispenses hot and ambient water for drink and food hydration, a trash container, and two refrigerators. The Wardroom/Galley requires electrical power and water.

Most of the Russian food is ambient stowed (freeze-dried, low moisture, or thermostabilized) and prepackaged in individual serving packages. Also, fresh foods are supplied to provide variety and prevent food boredom. This includes in-season products such as apples, lemons, oranges, tomatoes, onions, garlic, and kielbasa.

The U.S. food (prior to assembly complete) is based on the Shuttle food system. Six types of food (thermostabilized, rehydratable, intermediate moisture, natural form, fresh, and irradiated) and beverages are provided. The food is packaged to be compatible with the SM wardroom table/galley.

Current agreements state that NASA provides half the food and RSA provides half - regardless of crew make-up.

Food preparation and consumption supplies include meal trays (for restraining food packages and utensils), knives, forks, spoons, scissors (for opening food packages), straws, and condiments.

13.13 Crew Privacy Accommodations

13.13.1 Purpose

Crew Privacy Accommodations (Crew Quarters) provide the crewmembers with a private area for sleeping, changing clothes, and off-duty activities.

13.13.2 Hardware Components

The hardware includes crew quarters (includes a private place to sleep, change clothes, “personal retreat”, a place to hang personal pictures, store clothes, etc.), and sleep restraints. The staterooms require electrical power and conditioned air. Currently, the SM design includes two crew quarters (“staterooms”). However, NASA is working to get a third stateroom added.

13.14 Summary

Interfaces Summary			
	ECLSS	EPS	C&T
Portable Emergency Provisions	H_2O, O_2		Audio
Housekeeping and Trash Management		Power	
Lighting		Power	
Personal Hygiene	water	Power	
Operational and Personal Equipment		Power	
Wardroom, Galley and Food	water	Power	
Crew Quarters	conditioned air	Power	

Restraints and Mobility Aids

- Hardware: equipment restraints, crew restraints, and mobility aids.
- Purpose: support IVA personnel and equipment restraint and personnel mobility.

Stowage

- Hardware: stowage racks, lockers, trays, containers.
- Purpose: stow loose equipment, supplies, and consumables.

Portable Emergency Provisions

- Hardware: PBA, missed resupply provisions.
- Purpose: sustain the crew in the event of an emergency and ensure the survival of the crew if a pressurized element is lost.

Decals and Placards

- Hardware: cue cards, stowage tray cards, and decals.
- Purpose: display crew instructions, procedures, and location coding nomenclature.

Housekeeping and Trash Management

- Hardware: vacuum cleaner and attachments, wipes and cleansers, trash collection bags.

Purpose: facilitate routine cleaning and trash management.

Closeouts

- Hardware: rack seals, standoff closeouts, utility interface panel closeouts, rack volume closeouts, endcone closeouts, window shades.
- Purpose: segregate volumes for noise and particulate control, and for aesthetic value.

Lighting

- Hardware: general lighting, portable utility lights, and emergency egress lighting.
- Purpose: facilitate productivity.

Personal Hygiene

- Hardware: waste management compartment, and hygiene supplies.
- Purpose: support personal hygiene and metabolic waste collection.

Operational and Personal Equipment

- Hardware: clothing, cameras, calculators, pens and pencils, recreational equipment, battery charger.
- Purpose: facilitate routine daily activities.

Wardroom and Galley and Food System

- Hardware: food and food preparation hardware, ovens, food trays.
- Purpose: provide nutritional support for the crew.

Crew Privacy

- Hardware: crew quarters.
- Purpose: provide a private area for sleeping, changing of clothes, and off-duty activities.

Questions

1. Which of the following is <u>not</u> a subsystem of Crew Systems?
   a. Decals and Placards
   b. On-orbit Maintenance
   c. Closeouts
   d. Internal Audio System
   e. All of the above are Crew Systems subsystems.
2. Which of the following is <u>not</u> a subsystem of Crew Systems?
   a. Restraints and Mobility Aids
   b. Operational and Personal Equipment
   c. Water Recovery and Management
   d. Portable Emergency Provisions
   e. All of the above are Crew Systems subsystems.
3. Which of the following statements is (are) true?
   a. Stowage hardware tracks on-board supplies.
   b. Portable Emergency Provisions are used to sustain the crew in the event of an emergency.
   c. O&PE is provided to repair powered equipment.
   d. The wardroom is used for conducting Life Science experiments.
   e. All of the above.
4. Which of the following statements is (are) true?
   a. Restraints and Mobility Aids are used to support crew translation.
   b. Personal Hygiene hardware is used to clean the interior of the station.
   c. Crew Privacy Provisions are used to support classified experiments.
   d. Housekeeping and Trash Management hardware is used to dispose of crew metabolic waste.
   e. All of the above.

5. Which of the following does not interface with the Galley/Food Subsystem?

   a. EPS

   b. ECLSS

   c. C&T (Communications and Tracking)

6. Which of the following subsystems interfaces with the on-board Water Systems?

   a. Restraints and Mobility Aids

   b. Personal hygiene

   c. Lighting

7. **Fill in the blank:** The _____ subsystem includes items that display location coding information, crew procedures, warning labels, and stowage information.

8. **Fill in the blank:** The _____ subsystem supports the nutritional needs of the crew.

9. Match the hardware subsystems with their components (use each component only once, there will be two left over).

1. Restraints and Mobility Aids Subsystem	a) Meal preparation utensils
2. Portable Emergency Provisions Subsystem	b) Compact disk player
3. Housekeeping and Trash Management Subsystem	c) Biocide wipes
4. Lighting Subsystem	d) PBA
5. Operational and Personal Equipment Subsystem	e) Task light assembly
6. Galley and Food Subsystem	f) First aid kit
	g) Shampoo
	h) Equipment bag

10. Match the hardware subsystems with their components (use each component only once, there will be two left over).

1. Stowage Subsystem	a) Rack volume closeout
2. Decals and Placards Subsystem	b) Stowage tray
3. Closeouts Subsystem	c) Dining table
4. Personal Hygiene Subsystem	d) Wet/dry vacuum cleaner
5. Wardroom Subsystem	e) Utility outlet panel
6. Crew Privacy	f) Waste collection compartment
	g) Stateroom
	h) Warning labels

Section 14
Crew Health Care System

14.1 Introduction

The Crew Health Care System (CHeCS) is required to maintain the health of the International Space Station (ISS) crew. CHeCS is composed of three subsystems, each of which meets one of three major health concerns associated with long-duration spaceflight. Multiple devices and supplies comprise CHeCS and are described in detail below.

14.2 Objectives

After reading this section, you should be able to:

- Identify the purpose of CHeCS
- Identify the purposes of the three CHeCS subsystems
- Identify the key components available by Flight 8A.

14.3 Purpose

The purpose of CHeCS is to enable an extended human presence in space by assuring the health, safety, well-being, and optimal performance of the ISS crew.

14.3.1 CHeCS Architecture

CHeCS components will arrive on ISS in three phases, with a few exceptions. A selection of hardware is manifested to support the Increment 1 crew (launched on Flights 2R, 2A.1, and 3A). The second phase is the launch of the first CHeCS rack, which will reside in the U.S. Laboratory Module (Flight 6A) until the U.S. Habitation Module arrives. The third phase is the launch of three CHeCS racks, which will reside in the U.S. Habitation Module (Flight 17A). At that point, CHeCS will be at its full compliment. See Section 14.8, CHeCS Launch Summary/Appendix, for CHeCS launch summary.

CHeCS consists of both rack-mounted and portable components. The portable components are either stowed until needed or permanently deployed. Stowage requirements for each component are presented in the following sections.

14.3.2 CHeCS Subsystems

Three health-related concerns were defined early in the Space Station development process. These include physiological countermeasures to spaceflight, environmental monitoring, and medical care. The three CHeCS subsystems each address one of the concerns. The Countermeasures System (CMS) evaluates crew fitness, provides countermeasures, and monitors the crew during countermeasures. The Environmental Health System (EHS) monitors air and water quality for chemical and microbial contaminants, monitors radiation levels, and monitors surface microbial contaminants. The Health Maintenance System (HMS) monitors crew health, responds to crew illness or injury, provides preventive health care, and provides stabilization and emergency transport between vehicles.

14.4 Countermeasures System

The CMS prevents cardiovascular and musculoskeletal deconditioning that occurs as a result of exposure to spaceflight. We have learned from the Skylab, Space Shuttle, and Mir Programs the importance of physiological countermeasures to maintain muscle and bone mass and strength, and we have learned to prepare for re-adaptation to the 1-g environment after landing. Prescribed exercise is performed daily by all ISS crewmembers, except on the day of an Extravehicular Activity (EVA) or within 24 hours of a periodic fitness evaluation. Periodic fitness evaluations monitor the crewmembers' fitness level and determine if deconditioning has occurred. This allows the crew surgeon to alter exercise and countermeasure protocols, if required.

14.4.1 Components

The CMS consists of exercise hardware, including a treadmill, resistive exercise device, and cycle ergometer, and monitoring devices, including a portable computer, heart rate monitor, and Blood Pressure (BP) and Electrocardiogram (ECG) monitor.

14.4.1.1 Treadmill With Vibration Isolation System

The Treadmill with Vibration Isolation System (TVIS) is used to simulate 1-g walking and running. The TVIS is used primarily for postural and locomotor musculoskeletal maintenance, with cardiopulmonary benefits. The treadmill is very similar to the Extended Duration Orbiter (EDO) treadmill flown on several shuttle missions. The major differences include relocation of the restraints, addition of active or motorized capability, and addition of the Vibration Isolation System (VIS). The VIS minimizes vibration that might affect other ISS systems or payloads by isolating x, y, and z translation, roll, pitch, and yaw. A TVIS system similar to the ISS TVIS was flown on shuttle Flight STS-81. The TVIS allows a maximum translation of ± 0.5 inches and ± 2.5 degrees rotation in any axis and does not pass a load greater than 5 pounds to surrounding connections or structures. The restraints, or Subject Load Devices (SLDs), are located to the side of the crewmember (Figure 14-1), rather than forward and aft as with the EDO treadmill. Similar to the Mir treadmill, the TVIS is located in a pit within the Service Module, and the running surface of the treadmill is flush with the floor of the module.

Figure 14-1. Treadmill with vibration isolation system

The display unit folds down when not in use. The treadmill operates in an active (powered) or passive (nonpowered) mode. The TVIS is launched on Flight 2A.1 and requires assembly on orbit. The TVIS will remain in the Service Module and is currently the only treadmill manifested for ISS.

14.4.1.2 Medical Equipment Computer

The Medical Equipment Computer (MEC) is the CHeCS Portable Computer System (PCS). The ***MEC provides for storage and downlink of exercise data from the ergometer and TVIS, physiological data such as electrocardiogram and heart rate, and EHS data*** (see Environmental Health System Components). The MEC also contains medical records, medical reference, and psychological support software.

14.4.1.3 Resistive Exercise Device

The Resistive Exercise Device (RED) prevents muscle atrophy of the major muscle groups by maintaining strength, power, and endurance. ***The RED provides resistance training for the major muscle groups*** of the legs, hips, trunk, shoulders, arms, and wrists. The RED is mounted to the Treadmill with Vibration Isolation System (TVIS) for isolation and to allow interval training protocols. Up to 430 pounds of resistance is available in increments of 5 pounds. Information, including set number, repetition number, and resistance load, is stored and viewed and/or downlinked via the MEC.

The following exercises can be performed with the RED:

- Squat
- Dead lift
- Bent rows
- Calf raises
- Leg extension
- Leg curl
- Knee lift
- Leg abduction
- Leg adduction
- Lateral raises
- Military press
- Chest/butterfly
- Biceps
- Triceps
- Side bends

14.4.1.4 Heart Rate Monitor

The heart rate monitors are heart watches that can be worn by the crew to monitor heart rate and control exercise level during daily exercise (Figure 14-2). Heart rate is measured accurately, continuously, and noninvasively. The heart rate transmitters are the same as flown on the space shuttle, with the heart rate receivers located on the treadmill, ergometer, and available on a watch.

Figure 14-2. Heart rate monitor

14.4.1.5 Blood Pressure/Electrocardiogram Monitor

The Blood Pressure/Electrocardiogram (BP/ECG) monitor is used to monitor and record systolic and diastolic blood pressure (in mmHg), ***heart rate, and 12-lead ECG waveform*** on a continual basis during periodic fitness evaluations and microgravity countermeasures. The information is downlinked to the flight surgeon in the Mission Control Center (MCC) for monitoring during the periodic fitness evaluations via the Medical Equipment Computer (MEC).

14.4.1.6 Cycle Ergometer With Vibration Isolation System

The cycle ergometer is used for systemic aerobic conditioning and can be used to perform independent upper and lower limb cycle activity. The cycle ergometer is located in the Lab and is shared by Crew Health Care System (CHeCS) and the Human Research Facility. The device is similar to the space shuttle Inertial Vibration Isolation System ergometer (Figure 14-3), with modifications made only to the electronics of the system. As with the TVIS, the Vibration Isolation System (VIS) isolates x, y, and z translation, roll, pitch, and yaw.

Figure 14-3. Space shuttle cycle ergometer

14.5 Environmental Health System

The Environmental Health System (EHS) provides qualitative and quantitative air, water, surface, and radiation monitoring for the internal and external environments of the ISS. Close environmental monitoring is crucial to ensure a safe, clean atmosphere for the crew to live and work. The EHS provides the hardware to monitor aspects of the ISS environment essential to crew health.

14.5.1 Components

The EHS hardware is divided into four groups, representing the four areas that are monitored: Water Quality, Microbiology, Radiation, and Toxicology.

14.5.1.1 Water Quality Hardware

Total Organic Carbon Analyzer

The Total Organic Carbon Analyzer (TOCA) determines the concentration of total carbon, total inorganic carbon, and total organic carbon in ISS potable water samples, as well as pH and conductivity (Figure 14-4). A full analysis is conducted in 30 minutes or less. Results are read from the TOCA display and/or stored and downlinked via the MEC. Following Flight 6A, the Total Organic Carbon Analyzer (TOCA) will be stowed in the CHeCS rack. Water is sampled weekly in the Service Module for the first 90 days of Increment 1 and monthly thereafter.

Figure 14-4. Total organic carbon analyzer

Water Sampler and Archiver

The Water Sampler and Archiver (WSA) is used to collect and store ISS water samples for in-flight and ground-based analysis. The kit contains water sampling and calibration syringes, archival sample bags, and sample collection adapters for obtaining samples aseptically. The Water Sampler and Archiver (WSA) is portable and stowed in the CHeCS rack when not in use.

14.5.1.2 Microbiology Hardware

Water Microbiology Kit

The Water Microbiology Kit (WMK) detects and enumerates microorganisms in the onboard water systems. The kit consists of a syringe pump assembly, microbial capture devices, air filter assemblies, liquid media, and sample and waste bags (Figure 14-5).

Figure 14-5. Water microbiology kit

After collection, water samples are drawn through the microbial capture device, which filters the water and captures microorganisms (Figure 14-6). Data from the Water Microbiology Kit (WMK) includes total count (colony forming units) and fecal coliforms. Results are read at 2 days and 5 days after inoculation of the microbial capture devices.

Figure 14-6. WMK syringe assembly

Surface Sampler Kit

The Surface Sampler Kit (SSK) contains media for culture of microbial and fungal organisms from exposed internal surfaces. Samples are taken from two sites per habitable module, once per month for the first 3 months of Increment 1 and once every 3 months thereafter. Two types of contact slides with agar media are used, one type for bacteria and one for fungi (Figure 14-7).

Slides are stowed after inoculation and evaluated at 2 days and 7 days for growth. Any resulting growth is compared to a density chart, and results are called down.

Figure 14-7. Surface sampler kit

Microbial Air Sampler

The Microbial Air Sampler (MAS) determines levels of airborne microbial contaminants in the habitable modules. The MAS kit contains a portable air sampling device used to collect air samples from ISS modules (Figure 14-8).

Figure 14-8. Microbial air sampler

Each module is monitored once a month for the first 3 months of Increment 1 and once every 3 months thereafter. Air samples are taken on two types of agar media plates, one plate for bacterial growth and the other for fungal growth. The incubation time is 48 hours for bacteria and 7 days for fungi. The crew compares resulting growth to density charts and calls down results.

14.5.1.3 Radiation Hardware

Tissue Equivalent Proportional Counter

The Tissue Equivalent Proportional Counter (TEPC) measures and stores accumulated radiation spectra. The TEPC includes a detector and spectrometer (Figure 14-9). During Increment 1, the TEPC interfaces with the MEC for data storage and downlink. After Flight 5A, TEPC data is transferred via the CHeCS 1553B bus for telemetry to the ground. The TEPC uses ISS power and must be connected to a CHeCS designated power/data port for data downlink. The TEPC operates continuously, requiring relocation by the crew weekly. The Tissue Equivalent Proportional Counter (TEPC) is secured to ISS nodes and modules via seat track fittings or Velcro.

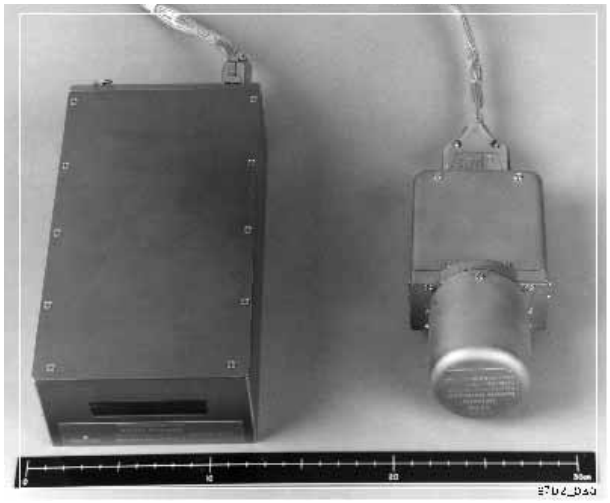

Figure 14-9. Tissue equivalent proportional counter

Personal Dosimeters

Personal dosimeters are worn continuously by each crewmember throughout the increment. Similar personal dosimeters are worn by space shuttle and NASA/Mir crewmembers. The small, passive dosimeters are analyzed postflight to determine the radiation exposure of the crewmember throughout the mission.

Radiation Area Monitors

Radiation Area Monitors (RAMs) are independent monitors attached throughout the ISS. A set of RAMs are deployed by each Increment throughout all habitable volumes, with four to six in each module and two to four in each node. Radiation Area Monitors (RAMs) are changed out with each crew rotation. The RAMs are small, passive dosimeters attached to walls and surfaces with Velcro. Results are read postflight to determine radiation levels throughout the ISS.

Intravehicular Charged Particle Directional Spectrometer

The Intravehicular-Charged Particle Directional Spectrometer (IV-CPDS) measures the flux of all trapped, secondary, and galactic cosmic rays as a function of time, energy, and direction internal to the ISS (Figure 14-10). Data from the IV-CPDS is transferred via the CHeCS 1553B bus for telemetry to the ground. The IV-CPDS is relocated by the crew weekly This may involve only rotating the instrument, since measurements are taken unidirectionally.

Figure 14-10. Intravehicular-charged particle directional spectrometer

Extravehicular-Charged Particle Directional Spectrometer

The Extravehicular-Charged Particle Directional Spectrometer (EV-CPDS) measures the flux of all trapped, secondary, and galactic cosmic rays as a function of time, energy, and direction external to the ISS. The EV-CPDS is composed of three Intravehicular-Charged Particle Directional Spectrometers (IV-CPDSs), each facing a different direction (Figure 14-11).

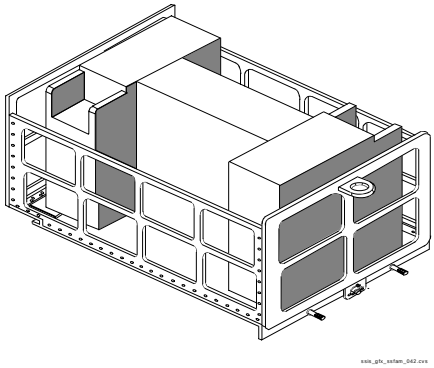

Figure 14-11. Extravehicular-charged particle directional spectrometer

The EV-CPDS is contained in an Extravehicular Activity/Extravehicular Robotics removable avionics box mounted to the S-0 truss. The EV-CPDS is mounted preflight and arrives on Flight 8A attached to the S-0 truss segment. An EVA is required to position the EV-CPDS properly. Data is transferred via the CHeCS 1553B bus for telemetry to the ground. The EV-CPDS is the only CHeCS component located external to the ISS.

14.5.1.4 Toxicology Hardware

Compound-Specific Analyzer - Combustion Products

The Compound-Specific Analyzer - Combustion Products (CSA-CP) detects, identifies, and quantifies concentrations of carbon monoxide, hydrogen cyanide, hydrogen chloride, and oxygen. Data is logged internally and displayed on the face of the unit. The CSA-CP can be used in the passive mode (Figure 14-12) or active mode using a pump attachment (Figure 14-13). Five primary scenarios have been identified for the use of the two CSA-CPs onboard.

- In the event smoke is detected, a CSA-CP is used to determine concentrations of combustion products during cleanup efforts.
- In the event a crewmember exhibits symptoms of inhalation exposure, a CSA-CP is used to sample the area of potential exposure and determine if combustion products are present.
- One CSA-CP is used in passive mode on a continuous basis, primarily to sample for carbon monoxide. If the response of any sensor exceeds the threshold concentration during passive monitoring, a local audio and visual alarm is annunciated to the crew.
- In the event of a Major Constituent Analyzer (MCA) failure, a CSA-CP is deployed and used in passive sampling mode for determining levels of oxygen.
- Following a combustion event, a CSA-CP provides information that indicates the effectiveness of contingency atmospheric cleanup procedures and if gas masks or portable breathing apparatus can be doffed.

9702_045

Figure 14-12. Compound-specific analyzer - combustion products

Figure 14-13. CSA-CP with pump

Volatile Organic Analyzer

The Volatile Organic Analyzer (VOA) determines the concentration of targeted compounds in the ISS atmosphere. The VOA is used for periodic sampling of the atmosphere, and data is downlinked via the CHeCS 1553B bus. Target compounds and detection limits are listed in Table 14-1.

Table 14-1. Volatile organic analyzer target compounds

Compound	Detection limit (mg/m^3)	Compound	Detection limit (mg/m^3)
1,1,1-Trichloroethane	1	Dichloromethane	0.5
1,2,2 Trifluoro-1,2,2-Trichloroethane	5	Ethanal, (Acetaldehyde)	0.5
1-Butanol	5	Ethanol	5
2-Butanone	3	Ethyl Acetate	5
2-Butoxyethanol	1	Hexamethylcyclotrisiloxane	10
2-Methyl-1,3-Butadiene	10	Methanol	0.5
2-Methyl-2-Propanol	5	Methyl Benzene, (Toluene)	3
2-Propanone	5	n-Hexane	5
4-Hydroxy-4-Methyl-2-Pentanone	1	n-Pentane	10
Acetic Acid	0.5	Trichlorofluoromethane	10
Benzene	0.1	Trifluorobromomethane	10
Carbonyl Sulphide	0.5	Trimethylsilanol	3
Chlorodifluoromethane	5	Xylenes, (total of three isomers)	10
Dichlorodifluoromethane	10		

Compound-Specific Analyzer - Hydrazine

The Compound-Specific Analyzer - Hydrazine (CSA-H) is used in the airlock to detect hydrazine contaminating the Extravehicular Mobility Unit (EMU) after an EVA (Figure 14-14). The monitor is stored in the airlock during an EVA on which contamination is deemed a possibility, and it is activated by the EVA crew upon repressurization of the airlock. After activation, the monitor is moved over the outside surface of an EMU. If hydrazine is present, a display indicates the contaminant and its concentration. EVA procedures define the actions to be taken if hydrazine is detected. A datalogger is built into the monitor to verify and document detection of a contaminant.

Figure 14-14. Compound-specific analyzer - hydrazine

14.6 Health Maintenance System

The Health Maintenance System (HMS) provides preventive, diagnostic, and therapeutic care, as well as patient transport capability. The HMS is designed to supply daily needs and basic life support, as well as advanced life support for a crew of three for 180 days.

14.6.1 Components

The HMS is composed of six components, the Ambulatory Medical Pack (AMP) provides for daily needs and periodic health examinations, the Crew Contaminant Protection Kit protects the crew in case of a toxic spill or contamination, and the remaining four, including the Advanced Life Support Pack, Crew Medical Restraint System, defibrillator, and Respiratory Support Pack, provide for advanced life support and transport.

14.6.1.1 Ambulatory Medical Pack

The AMP provides in-flight medical care, such as basic first aid and treatment for minor illness or injury. The AMP includes daily use items such as oral medications, bandages, topical medications, and injectables (Figure 14-15). Also included are physician's instruments needed for comprehensive physical exams performed monthly on each crewmember. A Portable Clinical Blood Analyzer (PCBA) is also included in the Ambulatory Medical Pack (AMP). The PCBA requires only a finger prick and analyzes levels of various blood constituents. The AMP is resupplied every 6 months.

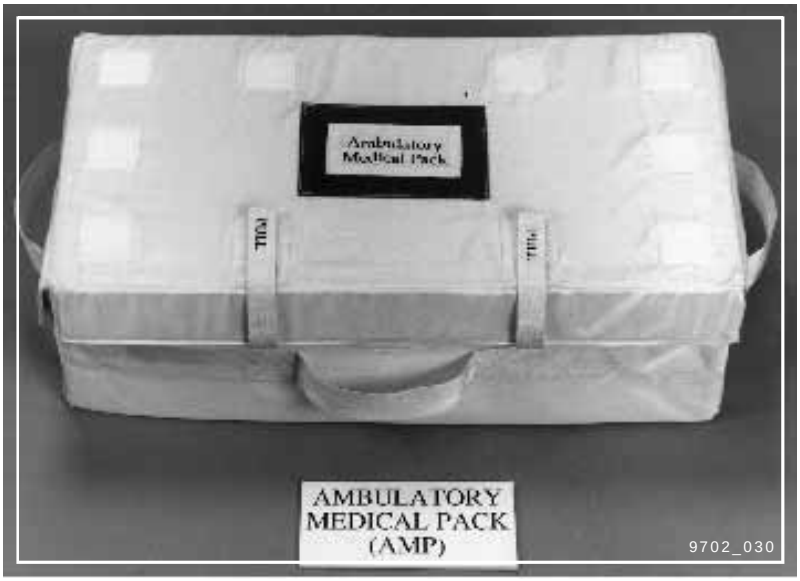

Figure 14-15. Ambulatory medical pack

14.6.1.2 Crew Contaminant Protection Kit

The Crew Contaminant Protection Kit (CCPK) is a multipurpose kit that protects the crew from toxic and nontoxic particulates and liquids (Figure 14-16). The CCPK is almost identical to the space shuttle contaminant cleanup kit. The major difference is the interface for the emergency eyewash system. The Space Station Eyewash (SSE) is a modified pair of swim goggles with tubing that allows a continuous flow of water to flush the eyes of contaminants. The SSE connects to the SVO-ZV port (Service Module drink port) for supply water and dumps contaminated water to 1.8-liter waste bags. The CCPK also includes goggles for eye protection, masks for respiratory protection, gloves for skin protection, multiple waste bags for containment, and decals for labeling the waste bags with the toxicity level of the contents. The CCPK is resupplied at the first available opportunity after use, or every 2 years.

Figure 14-16. Crew contaminant protection kit

14.6.1.3 Advanced Life Support Pack

The Advanced Life Support Pack (ALSP) provides advanced cardiac life support and basic trauma life support capabilities. Supplies in the ALSP are divided into subpacks by function (Figure 14-17). The following subpacks are included in the ALSP:

- Airway Subpack
- Drug Subpack
- Emergency Surgery Subpack
- Assessment Subpack
- Intravenous (IV) Administration Subpack
- Bandages Subpack

In addition to the subpacks, the ALSP contains an Ambu bag, blood pressure cuff, stethoscope, sharps container, IV infusion pump, and endotracheal detector device. The ALSP is resupplied at the first available opportunity after use, or every 18 months.

Figure 14-17. Advanced life support pack

14.6.1.4 Crew Medical Restraint System

The Crew Medical Restraint System (CMRS) provides restraint, with spinal stabilization, for an ill or injured crewmember, while also providing restraint for the Crew Medical Officers (CMOs) attending to the patient (Figure 14-18). The CMRS provides electrical isolation for the CMOs and the ISS during defibrillation. The CMRS is stowed in the CHeCS rack and attaches to the ISS via seat track interfaces. The design enables the CMOs to deploy the CMRS and restrain the patient within 2 minutes.

Figure 14-18. Crew medical restraint system

14.6.1.5 Defibrillator

The defibrillator provides for defibrillation, ECG and heart rate monitoring and analysis, and transcutaneous (external) pacing. The defibrillator, pictured in Figure 14-19, is a commercial-off-the-shelf device with the addition of a Power and Data Interface Module (PDIM). The PDIM allows downlink of the ECG and heart rate to the flight surgeon in the Mission Control Center-Houston (MCC-H). The defibrillator is stowed in the CHeCS rack with power and date lines connected. If the injured crewmember cannot be brought to the CHeCS rack, the defibrillator can be brought to the patient. The defibrillator can be powered from any UOP, but can downlink data only through a CHeCS UOP. The defibrillator includes two batteries for use during patient transport. Periodic on-orbit checkouts of the defibrillator unit by the crew are required.

Figure 14-19. Defibrillator

14.6.1.6 Respiratory Support Pack

The Respiratory Support Pack (RSP) provides resuscitation for a crewmember with impaired pulmonary function. The RSP, shown in Figure 14-20, ventilates an unconscious crewmember automatically, with the Crew Medical Officer (CMO) preparing the settings; provides oxygen to a conscious crewmember who needs assistance breathing; and allows the CMO to manually resuscitate a patient. The RSP uses oxygen from the ISS O_2 bus, portable breathing apparatus bottles, or space shuttle oxygen ports. The RSP is pneumatically powered and, therefore, has no Electrical Power System interface. The RSP will be functional at Flight 7A, after installation of the oxygen supply tanks, and will be stowed in the CHeCS rack.

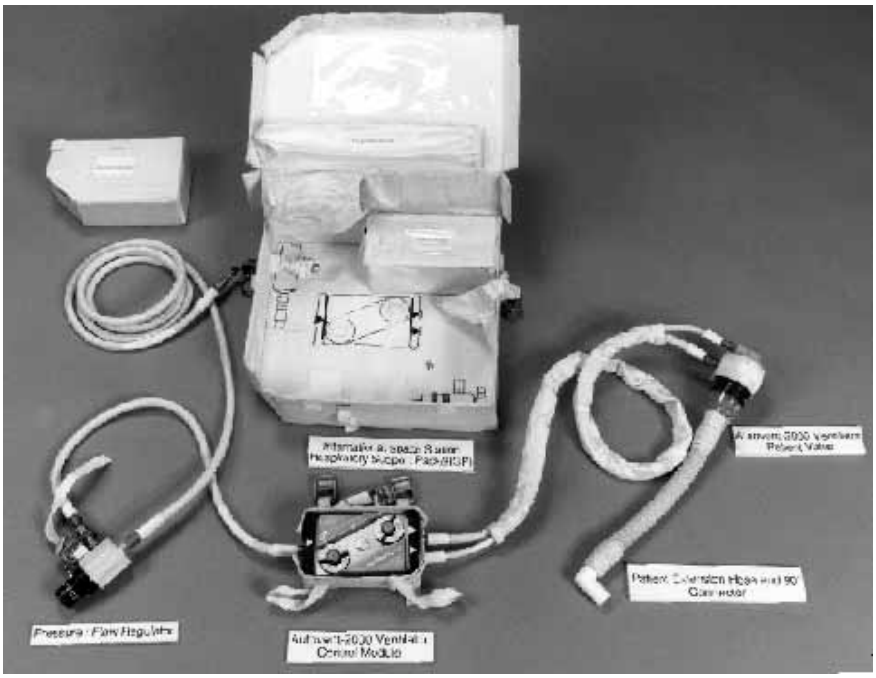

Figure 14-20. Respiratory support pack

14.7 Summary

CHeCS, including the Countermeasures System (CMS), EHS, and HMS, enables an extended human presence in space by assuring the health, safety, well-being, and optimal performance of the ISS crew.

CounterMeasures System	Environmental Health System	Health Maintenance System
Treadmill with Vibration Isolation System	Total organic carbon analyzer	Ambulatory Medical Pack
Medical equipment computer	Water sampler and archiver	Crew Contaminant Protection Kit
Resistive exercise device	Water Microbiology Kit	Crew Medical Restraint System
Heart rate monitors	Surface Sampler Kit	Advanced Life Support Pack
Blood pressure/electrocardiogram monitor	Microbial air sampler	Defibrillator
Cycle ergometer with Vibration Isolation System	Tissue equivalent proportional counter	Respiratory Support Pack
	Personal dosimeters	
	Radiation area monitors	
	Intravehicular-charged particle directional spectrometer	
	Extravehicular-charged particle directional spectrometer	
	Compound-specific analyzer - combustion products	
	Volatile organic analyzer	
	Compound-specific analyzer - hydrazine	

14.8 CHeCS Launch Summary

Flight	CHeCS component(s)
2A.1	TOCA, heart rate monitors, TEPC, CCPK, TVIS, MEC, CSA-CP, BP/ECG monitor, SSK, WSA, RED
3A	AMP, ALSP
2R	Personal dosimeters, RAMs, HRDs
6A	CMRS, IV-CPDS, defibrillator, RSP, VOA, MAS, cycle ergometer
7A	CSA-H
8A	EV-CPDS
16A	Spectrophotometer
17A	Incubator, fungal spore sampler, slide staining apparatus

Questions

1. What is the purpose of the CHeCS?
   a. To resupply health care consumables during ISS operations
   b. To ensure the health, safety, well-being, and optimal performance of the ISS crew
   c. To provide health care and environmental monitoring
2. The purpose of the CHeCS Health Maintenance System (HMS) is to provide
   a. Preventive, diagnostic, and therapeutic care, as well as patient transport capability
   b. Preflight, in-flight, and postflight physical examinations to ensure crew health
   c. Complete advanced life support and rescue capabilities in a medical emergency
3. Which of the following CHeCS components will <u>not</u> be on ISS by Flight 8A?
   a. Defibrillator
   b. Incubator
   c. Medical Equipment Computer (MEC)
4. The purpose of the CHeCS Countermeasures System (CMS) is to prevent
   a. Crew exposure to radiation
   b. Contamination of the internal ISS environment
   c. Cardiovascular and musculoskeletal deconditioning
5. Which of the following CHeCS CMS components will not available by Flight 8A?
   a. Treadmill with Vibration Isolation System (TVIS)
   b. Blood Pressure/Electrocardiogram (BP/ECG) monitor
   c. Lower Body Negative Pressure (LBNP)

Section 15
ISS Operations and Planning

15.1 Introduction

Unlike previous projects in U.S. human space flight, the International Space Station (ISS) will operate on a continuous basis, with execution planning, logistics planning, and on-orbit operations occurring simultaneously for long periods of time. Additionally, the sheer size and unique constraints of Station compared to Shuttle demand a somewhat different approach to both planning and operations.

The ISS planning process is very complex and involves many interfaces and products. Utilizing the results of this planning process for operations as well as translating the results of current operations into future planning is a sophisticated process. This section will introduce you to the overall process and introduce several products and activities of each of the four phases of ISS planning that are important aspects of real-time Station operations. How these activities are performed on orbit will also be described. Everyone has a part of the puzzle and requires other parts (products) in order to complete their function.

15.2 Objectives

After completing this section of the ISS familiarization training manual, you will be able to:

- Describe the four planning phases of the increment planning process and the associated activities and products
- Explain the major dependencies between products for the increment planning process
- Identify the name, primary users, and functions of each Integrated Planning System application
- Identify what items are tracked and key crew capabilities in the Inventory Management System.

15.3 Introduction to Planning Time Frames and Products

15.3.1 ISS Planning Time Frames

Before discussing the ISS planning process in depth, it is important to be familiar with the terms that are used to reference planning time frames. These terms are as follows:

- Increment (I) - This is the time frame from the launch of a vehicle rotating ISS crew-members to the undocking of the return vehicle for that crew. The length of an increment ranges anywhere from 1 month to about 6 months. This term refers to all of the activities

occurring during the time frame, including the Shuttle and Russian logistics flights. Additionally, a great deal of ISS planning is based upon the increment.

- Expedition - This covers the same time frame as an increment but is used when referring to the ISS crew serving during that increment.
- Planning Period (PP) - This is the period on which much of ISS planning is based. It spans approximately 1 calendar year, but is tied to the beginning and end of ISS increments, so usually does not begin on January 1. From the Rev C Assembly Sequence, Planning Period 1 is June 1998 through January 1999 and includes Increment 0 (Flights 1A/R, 2A, 1R, 2A.1, 3A). Planning Period 2 runs January 1999 through December 1999 and includes Increments 2 and 3.

15.3.2 Complexity of the Planning Process

As was mentioned in the Introduction, the planning process for the International Space Station is much more complex than that of previous programs. An understanding of what has caused this additional complexity provides the rationale for why many of the products described later in this section are produced. Many factors make planning for ISS more complex than previous programs, the most important of which are discussed below.

The first is product delivery dates. Some products, such as flight software, are required for every ISS assembly flight at launch (L)-X months. Others, such as the Multilateral Increment Training Plan, are produced for an entire increment (which may include several launches) at Increment (I)-X months. Since an increment can include several flights, the challenge is to synchronize templates and product delivery dates.

The second challenge is international integration. The issues include language of operations and documentation and merging different cultural styles of planning as well as conforming to memorandums of understanding between international organizations. Just integrating programs is a significant challenge - not only merging International Partner programs with NASA programs, but also merging the NASA programs (Space Shuttle and Space Station) themselves. The Shuttle program is very stable and is trying to shorten its planning templates, but the Space Station program is very new and is establishing more conservative templates. Shared products under these different styles and priorities for planning are sometimes difficult to schedule together.

The final area that is a particular challenge to ISS is resource management. Crew time, power, communication time, and bandwidth are just some of the resources that are limited for ISS, and must be managed to achieve ISS objectives. Many of these resources, such as crew time, also fall under partner allocation agreements made at the program and government level. Planners from all the Partners will work together to ensure that each Partner is receiving an appropriate amount of resources over time.

Addressing these challenges is no small task, but the first step is to establish a template for the many product deliveries required to fly the Space Station.

15.3.3 Increment Planning Process Template

There are four main phases to planning. They are Strategic Planning, Tactical Planning, Pre-increment Planning and Increment Execution. The phases are not completely distinct because of overlap in some products and early production. Each phase, along with major products produced, are illustrated in Figure 15-1 and described below.

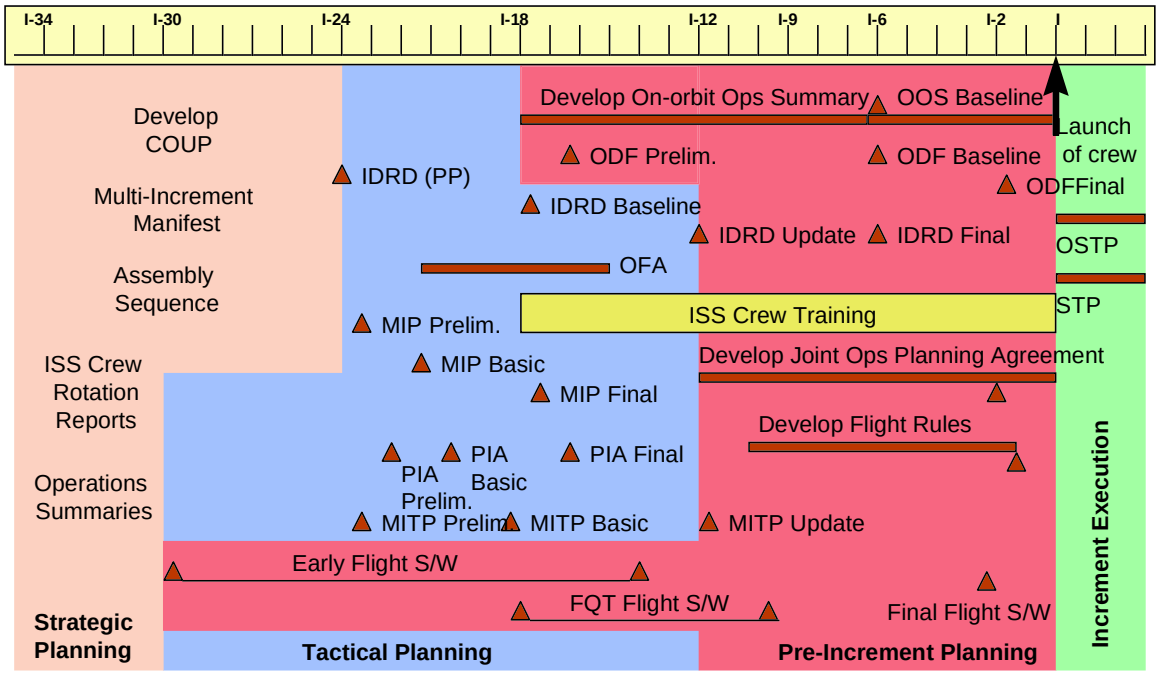

Figure 15-1. Planning Process Template

15.3.4 Strategic Planning

Definition: Strategic planning is long range planning and begins at about PP-5 years (5 years before a planning period) and continues through PP-3 years (3 years before planning period execution). Many products in this phase are scrolling plans that cover the next 5 years and are updated regularly.

Generic Groundrules, Requirements, and Constraints (GR&C) Part 1: Strategic and Tactical Planning - This document defines the generic groundrules and constraints used for Program-level planning functions (i.e., planning for vehicle and cargo traffic, resource planning, crew rotation planning, crew loading, cargo integration, and ground processing), and the generic Program-level operations requirements that must be met by the ISS Execute-level organizations.

Consolidated Operations and Utilization Plan (COUP) - This document is a 5-year plan for the Space Station. It defines the system operations and utilization activities planned for the ISS. For each planning period, it establishes the amount of resources and accommodations allocated and subscribed by system and each Partner for utilization, and reflects the planned amounts of supporting services from other programs that are available and subscribed. The COUP also

provides specific direction and guidance to tactical planning regarding COUP implementation. The COUP includes a high level manifest of major items planned for each planning period and is written by the ISS Program Office.

Multi-Increment Manifest - This document defines the traffic and crew rotation plans for the five planning periods contained in the COUP. The Multi-Increment Manifest (MIM) contains three major sections, the assembly sequence overview, flight schedule, and flight table. The flight schedule combines the high-level integrated Traffic Plan and Crew Rotation Plan with other key planning information including flight-specific and deferred EVAs, docking port utilization plans, and planning period and increment boundary information. The flight table is a high-level summary which includes number of crewmembers, altitude, number of days docked, and a high-level description of the cargo. It is prepared by the Multi-Increment/Tactical Planning Integrated Product Team (IPT) (an ISS program level group with MOD and International Partner participation) and signed by all partners. The crew rotation takes into account the upmass capability of the planned vehicle, vehicle life, training currency for time critical and complex tasks, and the assembly sequence. The traffic model for ISS uses the assembly sequence, vehicle life, ISS altitude, logistics requirements and micro-gravity requirements to plan the flow of vehicles to and from the ISS.

Assembly Sequence - This is essentially the schedule for building the Space Station. It takes into account the system capabilities through the ISS build process, element availability dates and partner agreements.

15.3.5 Tactical Planning

Definition: Tactical Planning begins at about PP-30 months with development of the PP Increment Definitions Requirements Document (IDRD). Delivery of the Baseline PP IDRD at PP-18 months is the transition point from Tactical to Pre-Increment planning. Updates to the PP IDRD are performed every 6 months as needed through the end of the Planning Period. Tactical Planning is a multilateral function which defines the resources, allocations, research objectives, priorities and manifest for each increment. It also continues the integrated traffic planning started in the strategic timeframe.

Increment Definitions Requirements Document (IDRD) - This document is produced for each planning period. The IDRD serves as an internal program agreement on the requirements for the increments. It is similar to a Shuttle Program Flight Requirements Document. Included in the IDRD are resource allocations, mission priorities, and a detailed manifest for each increment and flight in the planning period. The Preliminary IDRD is published at PP-24 months, with the baseline published at PP-18 months and then updated every 6 months as required. It is developed by the Tactical Planning IPT with inputs from all concerned organizations. All affected partners sign the document.

Resource and Engineering Feasibility Assessments - During development of the Baseline PP IDRD, after the system and utilization requirements have been integrated and compiled for each increment in the PP, assessments are performed to determine the feasibility of satisfying these requirements. There are two types of assessments: an Engineering Feasibility Assessment

(EFA) and an Operations Feasibility Assessment (OFA). This is the opportunity for the planning world to ensure that the priorities and objectives of the increments are possible to achieve.

Payload Integration Agreement (PIA) - These documents layout the agreements made between the ISS program and its payload customers. A PIA is produced for each major payload. The agreement includes requirements of each side and resource allocations, including crew time. This agreement will also have a Payload Data Library to document the details concerning telemetry, training, etc. much like Shuttle Payload Integration Plan (PIP) annexes. These agreements are developed by the Payload Operations and Integration Function (POIF) at Marshall Space Flight Center (MSFC).

Multi-lateral Increment Training Plan (MITP) - This document is written for each increment. It describes all of the training required to support a single ISS increment including systems and payloads training. There are sections to cover ISS crew training, Shuttle crew training and controller team training. The baselined version is published one month prior to ISS increment specific crew training.

Mission Integration Plan (MIP) - This is a Shuttle Program to Station Program agreement. It is similar to a Shuttle Payload Integration Plan (PIP) but it covers all of the cargo elements and Shuttle supported activities for an entire ISS assembly or utilization flight. The Shuttle Program Office Payload Integration Manager (PIM) manages the document. It does not include as extensive a set of annexes since many of the requirements documented in the PIP annexes are internal to MOD for the Station flights.

Post Increment Evaluation Report - This report documents the accomplishment of increment objectives, allocations and requirements. It contains an overview of the increment, increment objectives and requirements, the degree to which the objectives and requirements were met, lessons learned from the increment, and recommendations.

15.3.6 Pre-Increment Planning

Definition: Pre-increment Planning begins at about I-18 months with delivery of the Baseline PP IDRD, and continues until launch. This phase is when actual flight and increment products are produced.

On-orbit Operations Summary (OOS) - This is a high level activity plan for an entire increment. High level activities are planned for a specific day of the increment but are not scheduled for a specific time. No details about the activity are provided. The OOS establishes the basis from which distribution of ISS resources is made by providing expected resource availability and environmental conditions throughout an increment, and by identifying constraints and critical events or time periods during an increment. The OOS is also the foundation for the development of the detailed Short Term Plan (STP), covered later in this section. Work on the OOS begins at about PP-18 months with the Preliminary OOS delivered at PP-12 months, Basic OOS at PP-6 months and Final OOS at PP-2 months. Updates to the OOS will continue through to the end of the Planning Period, to reflect operations as they actually occurred. The OOS is analogous to the Expedition Plan used on the Mir space station. There is no analogous Shuttle

product due to the short duration of Shuttle missions. Refer to Figure 15-2 for an overview of the OOS Cycle.

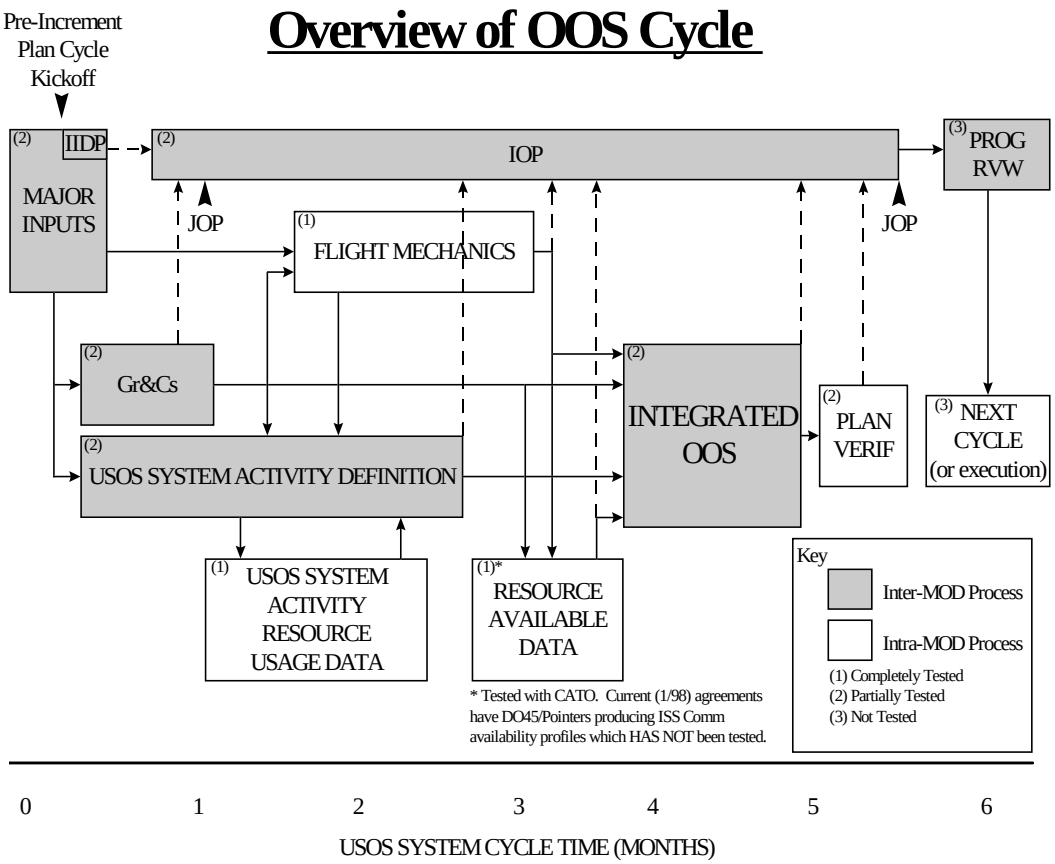

Figure 15-2. Overview of OOS cycle

Flight Rules - These are the guidelines for real-time decision making. They are monitored and approved by the Flight Rule Control Board (FRCB) chaired by the Flight Directors. There are Generic, Increment Specific, and Flight Specific versions of the flight rules.

Execute Planning Ground Rules and Constraints (GR&C) - These are the guidelines used to create the OOS, STP and other planning functions. As with flight rules, there are both generic GR&Cs and increment specific GR&Cs.

Operations Data File (ODF) - This is the collection of procedures and reference material required to operate and maintain the ISS systems, payloads and attached vehicles. The ODF includes both paper and electronic material, but the emphasis is on electronic data. There are six major components to the ODF. They are as follows:

- Systems Operations Data File (SODF) - Includes the NASA, Canadian Space Agency (CSA) and Italian Space Agency (ASI) system procedures as well as any multi-segment procedures.
- Payload Operations Data File (PODF) - Includes U.S. and Italian payload procedures.

- Canadian Space Agency (CSA) PODF - Contains Canadian Payload procedures.
- Russian Space Agency Operations Data File (RSA ODF) - Contains most of the systems and payload procedures for the Russian Orbital Segment (ROS).
- The European Space Agency (ESA) also has an integrated ODF with both systems and payloads.
- The National Space and Development Agency (Japan) (NASDA) ODF is similar to the RSA ESA ODF in scope.

SODF - The SODF is the repository of all the U.S. Space Station onboard and ground systems procedures. Procedures contain the necessary technical information compiled in a standardized format that the crew and ground controllers need in order to perform their jobs. Procedure authors gather information from various sources before writing a procedure. Once written, the procedure is validated and verified to ensure its safety and effectiveness. The development of procedures takes place in three cycles: Preliminary, Basic, and Final. The Preliminary cycle is worked from L-24 months to L-18 months and involves the initial development of the procedure. Once written and reviewed the procedure moves to the Basic cycle, where the majority of the validation occurs. The Basic cycle covers the time period of L-18 months to L-6 months. During the Basic cycle the procedure is refined by incorporating any new information that has become available. At the end of the Basic cycle, at L-6 months, the procedures must be contained within the U.S. SODF. The Final cycle is worked from L-6 to L-2 months. This is the last chance to change a procedure. After the Final cycle only critical change requests will be accepted.

The U.S. SODF contains six different types of procedures:

- Activation and Checkout - Used for the activation or checkout of systems of components of systems.
- Nominal - Used to carry out the normal day-to-day functions
- Quick Response - Used in the event of a failure to quickly safe the system within a very limited amount of time
- Malfunction - Designed to copy with system or equipment failures that require a diagnostic process
- Corrective - Designed to bypass or overcome a failure condition
- Reference - Includes nonexecutable ancillary information used to ensure the successful execution of a procedure

Integrated Operations Plan (IOP) - This is really more of a tool to access and review many of the products discussed in this section. It provides on-line access via the Internet to operations products and schedules. The IOP is organized and developed by increment and includes access to the SODF, MITP, GR&C, and flight schedules. It is maintained by DO47, the Flight Planning and Tool Development Group. The Preliminary IOP is frozen at I-12 months, the Basic at I-6 months and the Final at I-2 months.

15.3.7 Increment Execution

Definition: This phase begins with the start of the increment. The planning products produced in this phase employ a "just-in-time" development philosophy to ensure the availability of up date plans and to minimize the need for frequent replanning.

STP - The STP is the detailed integrated schedule of activities to be performed during 1 week of Station operations. The STP includes all ISS activities, including U.S. and International Partner systems and payload activities. In addition to crew activities, STP timelines also include automated onboard activities and ground controller activities, as well as ancillary data such as Station attitude and communications coverage data. Activities in the STP include all the information necessary for execution, including a reference to the procedure associated with each activity. The STP is somewhat analogous to a combination of the Shuttle Flight Plan and the Spacelab Payload Crew Activity Plan (PCAP). The differences between the STP and the Shuttle products are that, while the Flight Plan and PCAP are paper products used for onboard execution, the STP is an electronic product used only for ground planning. However, the STP is used to derive the Onboard Short Term Plan (OSTP) which is used for onboard execution. The STP is developed the week prior to its execution and is based on the OOS which was developed prior to the increment. An example of an STP is shown on the next page in Figure 15-3. Development of the STP is performed by a team called the International Execute Planning Team (IEPT) which consists of planning personnel from the U.S. and each International Partner.

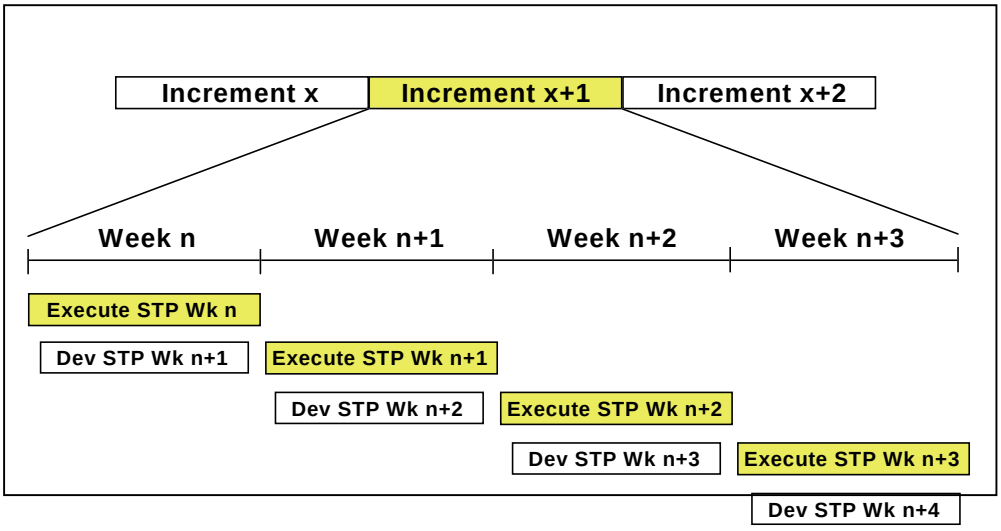

Figure 15-3. Weekly STP Development

OSTP - The OSTP is the integrated plan which is viewed and executed onboard Station. Since it is derived directly from the STP, the OSTP contains all activities to be executed, including crew, ground, and automated activities for the U.S. and International Partner Segments. The OSTP will contain approximately three days of activities. At any given time, the OSTP will contain yesterday's, today's, and tomorrow's activities, with uplink of new activities occurring daily. In addition to scheduled activities, the OSTP will also contain "Jobjar" activities. These are activities which do not need to be performed at a specific time but may be performed at the

crew's discretion. The OSTP is viewed using an onboard laptop computer using software called the OSTP/ODF Crew Interface (OOCI). In addition to the OSTP, OOCI software will also be used by the crew to view electronic procedures and other electronic documentation, and after Flight 8A, will allow the crew to view and interface with automated procedures. Ground controllers will be able to view and interface with the OSTP on Mission Control Center (MCC) workstations using software called the OSTP Editor/Viewer (OE/V). OSTP and OOCI capabilities will be phased in during the assembly sequence. When all capabilities are available, the OSTP will provide a very powerful planning and execution tool for the crew and controllers. Some of the capabilities that will be available are linking to procedures directly from the OSTP, statusing activities directly on the OSTP, filtering of activities, setting reminders of upcoming activities, and making notes and annotations directly on the OSTP. Also, using OE/V software, ground controllers will be able to keep track of onboard activity status with constant voice communication with the crew. The relationship between the OOS, STP, and OSTP is summarized in Figure 15-4.

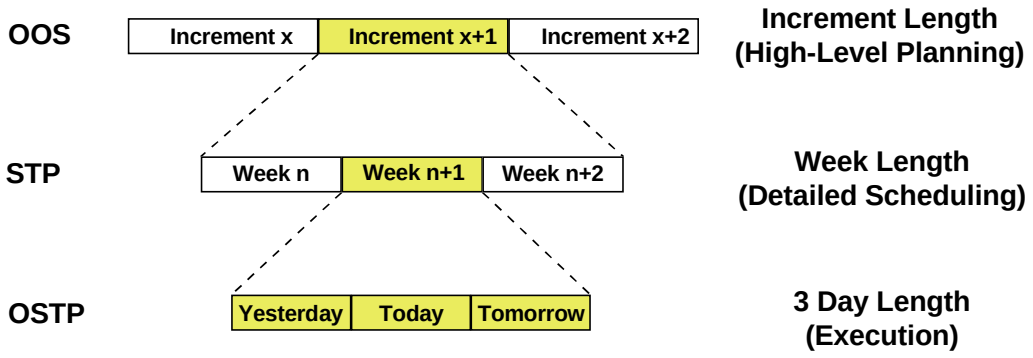

Figure 15-4. Relationship between the OOS, STP, and OSTP

15.4 Planning and Analysis Tools

While there are many tools available for planning and analysis of Station operations, there are several tools and products in particular which deserve special attention because of their widespread use and impact on operations.

15.4.1 The Integrated Planning System

In order to provide data on resources available, identify conflicts in resource allocation, and distribute Station resources, the Integrated Planning System (IPS) was developed. The IPS is an integrated collection of computer applications used for planning and analysis of Space Station operations. The primary users of IPS will be flight controllers and planners developing the OOS, STP, and OSTP. IPS consists of seven major applications:

- Consolidated Planning System (CPS) - Used for generation and analysis of both ground and on-orbit activity timelines and plans. CPS is used to assess the IDRD, generate the OOS, STP, and OSTP as well as performing real-time and near-real-time planning and replanning.

CPS can schedule against multiple resources as well as handle complex conditions and constraints, and is used for both ISS and Shuttle planning

- Consolidated Maintenance Inventory Logistics Planning (CMILP) tool - Used by ground controllers and planners for onboard inventory tracking, developing Station resupply/return requirements, and for real-time and near real-time support of maintenance operations
- Flight Dynamics Planning and Analysis (FDPA) tool - Used by ground controllers and planners to provide high fidelity trajectory, attitude, propellant consumption, and communications coverage analysis
- Procedures Development and Control (PDAC) tool - Used by ground controllers to develop and configuration manage operations procedures, develop onboard executable procedures via the Timeliner compiler interface, and distribute procedures electronically
- Resource Utilization Planning and System Models (RUPSM) tool - Models the ISS Electrical Power System, Thermal Control System, and Environmental Control and Life Support System systems. Using RUPSM, ground controllers can analyze and plan usage of ISS electrical, thermal, and life support resources to support timeline development and monitor system performance in real and near real-time
- Robotics Planning Facility (RPF) - Provides software tools to model robotics systems, including the Space Station Remote Manipulator System (SSRMS). RPF is used as a robotics design, analysis, and training tool and provides real-time and near real-time robotics operations support
- ISS Mission Operations Directorate (MOD) Avionics Reconfiguration System (IMARS) - IMARS is the central repository for ISS MOD reconfiguration products and provides the software tools required for processing reconfiguration data. IMARS produces Mission Build Facility (MBF) utilization files from the Standard In and command/telemetry products for the MCC and Portable Computer System (PCS) from MBF Standard Out. It also provides flight software and data configuration management and serves as a central repository for command files, data load files, caution and warning limits, and Standard In and Standard Out files.

15.5 Inventory Management

Due to the volume of articles onboard Station, and the fact that Station will be on orbit continuously for at least 15 years, the need arises for a system of tracking the location and status of items that have been stored on board. The Inventory Management System (IMS) fulfills that purpose.

The Inventory Management System, together with detailed logistics planning, provides a process used to ensure that the right items are in the right place at the right time. To perform this task, plans and processes are developed which ensure the continued support of the ISS core systems. Mission manifesting and transfer of items to the Kennedy Space Center (KSC) are also supported.

Logistics and inventory management starts years before a flight and determines who sends what items to the ISS, what vendors are used during the procurement process, and how items will be repaired. This is extremely important because it is necessary to ensure that the right items are sent to, maintained on, and returned from the ISS at the right time. A current status and a forecast for the future availability of inventory is essential. It is necessary to know what is broken in order to fix it.

Inventory is affected by the manifest of each flight. The ISS uses the Inventory Storage File to determine exactly what is onboard. Inventory includes items pertaining to:

- Crew Support - Includes clothing, food, and personal items
- Station Support - Includes spares, repair parts, consumables, technical data and documentation, support equipment, etc.
- User Support - Includes items required to support customer/user for payloads and their associated support items, and consumables including fluids and gases. It also includes returning experiment products, specimens, and disposal of waste materials

The inventory on the ISS is managed by the Inventory Management System. IMS is a software application that will reside onboard the Station Support Computers (SSC), so updated inventory is available Station wide. Updates to the inventory can be made via the keyboard, Graphical User Interface (GUI) or bar code reader. IMS provides capabilities for crew queries, displays, editing of locations, keeping track of quantities, changes in operational status, changing hazardous codes, keeping notes, etc. It also creates a change/update log to track inventory activities.

Two scheduled inventory audits are planned for the crew. The first will allow sufficient time for the necessary items to be manifested into the Mini-Pressurized Logistics Module (MPLM) and the second will be done closer to launch for items to be manifested into the mid-deck lockers. The ground will track everything else. One thing to note is that food will not be tracked but will be in the database for volumetric purposes. There is a set resupply regardless of what has been consumed.

Resupply and Return Analysis is another part of Inventory Management. It evaluates the capability to supply logistics support resources for on-orbit systems. Weight and volume requirements of Orbital Replacement Unit (ORU) spares, repair parts, support equipment, tools, etc. all have to be evaluated. Decisions must be made concerning everything from the number of crewmembers allowed on a flight to alternative logistics carriers that could be used. Unfortunately with all the constraints, science requirements may be impacted by system maintenance requirements. There may also be times when a payload item is moved to another flight or scheduled maintenance activities will have to be postponed, all due to changes in the manifest.

As you can see the manifest is an ever changing list of items that depends upon the Inventory Management System to ensure that crewmembers have what they need when they need it in order to sustain the ISS and themselves.

15.6 Scenario

What is immediately obvious from this brief overview is that the ISS planning and operations process is a very complex web of simultaneous activities and products, all of which are in various stages of maturity at any given time. There is no clear starting and ending point that is analogous to a single Space Shuttle mission. Planning for a particular day, week, increment, and year on ISS all occur simultaneously with on-orbit operations. Perhaps the best way to summarize this is to look at what could be an individual day in the life of the ISS program.

On this particular day, a crewmember pulls up the OSTP on a laptop, and views the activities that are scheduled for the day. The first scheduled activity in the timeline is performing a minor maintenance task. Using information provided in the activity, the crewmember pulls up the necessary procedure, which is contained in the SODF, and begins to collect the necessary tools and materials, an easy task since their location has been recorded and stored within the Inventory Management System.

Meanwhile, ground planners are converting STP data into OSTP records in preparation for uplink to the crew. At the same time, other ground controllers are busy generating data in IPS applications in preparations for next week's operations. One Electrical Power Systems controller, for example, uses RUPSM to predict exactly how much power will be available at any given time during the week. This prediction will be fed, in part, by trajectory and attitude data that was generated by FDPA as part of OOS development in preparation for the increment. Later in the week, the Ops Planner will use CPS to take this predicted data, along with activities scheduled during OOS development, to schedule the activities appropriately into next week's STP.

Speaking of the OOS, development and refinement of the OOS for the next increment would be in full swing. Again using tools available in the IPS, as well as increment requirements from the IDRD, data and activities are being generated to help define everything that needs to get done during the increment. Also, ground controllers are busy writing new procedures related to the activities for the increment and logistics personnel are working out the Shuttle manifest to get the needed equipment onboard.

This very brief and simplified scenario gives you an idea of the complexity of the Station planning and operations process. Of course, the actual processes are much more complicated and require a tremendous amount of integration among many different organizations, both U.S. and International Partners, to successfully plan and perform Station operations.

15.7 Summary

The planning process for the International Space Station is a very complex process and involves many activities and products. These products are developed during the four planning phases of the increment planning process. They are as follows:

- Strategic Planning - Long Range Planning which begins at PP-5 and continues through I-2 years. Includes products such as the COUP, Assembly Sequence, Multi-Increment Manifest, and GR&C

- Tactical Planning - Multilateral function which defines the resources, allocations, research objectives, priorities, and manifest for each increment and begins at PP-30 months. Includes products such as the IDRD, PIA, MITP, MIP, Resource and Engineering Feasibility Assessments, and Post Increment Evaluation Reports

- Pre-Increment Planning - This phase is when actual flight and increment products are produced. Pre-Increment planning begins at about I-18 months with delivery of the Baseline PP IDRD, and continues until launch. Includes products such as OOS, Flight Rules, GR&C, ODF, SODF, and IOP.

- Increment Execution - This phase begins with the start of the increment. The planning products produced in this phase employ a "just in time" philosophy to ensure the availability of update plans and to minimize the need for frequent replanning. Includes products such as the STP and OSTP.

It is important to understand that planning products have important functions by themselves, but the key to the Increment planning process is that these products work together and are dependent on one another. For example, the STP is used to derive the Onboard Short Term Plan (OSTP) which is used for onboard execution. It is developed the week prior to its execution and is based on the OOS which was developed prior to the increment.

The Integrated Planning System provides an integrated collection of computer applications which provides a means for the coordinated generation and analysis of all required Space Station operations products. Almost all flight controllers will need to use one or more of the IPS applications as part of their day to day activities, both on console in the Mission Control Center and in the office environment. It is important for all IPS users to understand not only the functions of the applications which they primarily use, but also how all the applications fit together to form an integrated system. There are seven IPS applications, they are as follows:

- Consolidated Planning System (CPS) - Interactive operations planning and activity scheduling tool. It is used for the generation and analysis of activity timelines and planning products.

- Consolidated Maintenance, Inventory, and Logistics planning (CMILP) - Interactive tool which provides support to maintenance procedures development, tracks onboard inventory, and supports logistics planning by developing and tracking Space Station resupply and return requirements

- Flight Dynamics Planning and Analysis (FDPA) - The FDPA application provides high fidelity Trajectory, Guidance, Navigation, and Control (GNC), and Pointing tools to support Space Station operations

- Procedures Development and Control (PDAC) - The PDAC application is an interactive tool which provides the capability to develop and manage operations procedures

- Resource Utilization Planning and Systems Models (RUPSM) - The RUPSM application provides mathematical models for the onboard Electrical Power System (EPS), Thermal Control System (TCS), and Environmental Control and Life Support System (ECLSS)
- Robotics Planning Facility (RPF) - The RPF provides software tools to model multiple degree of freedom robotics systems, including the SSRMS
- ISS MOD Avionics Reconfiguration Subsystem (IMARS) - The IMARS functions as the central repository for Space Station Mission Operations data reconfiguration products and provides the software tools required for processing this data.

Inventory management is needed to ensure that the right items are sent to, maintained on, and returned from the ISS at the right time. It is required to aid the crew and ground controllers in managing the ISS onboard inventory as well as maintain the current status and forecast future inventory availability. It is an ongoing activity that gives planning a picture of what is on the ISS.

IMS is the software application that is used by the crew and MCC-H personnel to track and manage the onboard inventory. It can be loaded onto any onboard SSC workstation. The updated inventory is available Station wide and contains a portion of the CMILP data. Additionally, a copy is maintained by the ISO on a workstation in the MCC-H to provide an identical system to that which the crew is using (great for troubleshooting problems).

IMS supports a bar code reader interface and provides capabilities for crew queries, displays, and editing of locations, quantities, operational status, hazardous codes, notes, etc. All of this via the keyboard, GUI, or bar code reader. IMS also creates a change/update log to track inventory activities, which will be downlinked by the ISO for analysis and integration into the CMILP database.

Questions

1. What planning product represents the integrated plan to be viewed and executed on board Station, and contains the specific activities that will be performed by the onboard crew?

2. What is the purpose of the Station Operations Data File (SODF)?

3. During what time period is the Short Term Plan (STP) developed, and how long is the operations period that the STP covers?

4. What tool will be used by onboard crew and ground controllers to track location and quantity of equipment and supplies onboard ISS?

5. Which of the following provides on-line access via the Internet to operations products and schedules?

   a. On-orbit Summary (OOS)

   b. Onboard Short Term Plan (OSTP)

   c. Mission Integration Plan (MIP)

   d. Integrated Operations Plan (IOP)

6. Which of the following is not a phase of ISS planning and operations?

   a. Strategic Planning

   b. Tactical Planning

   c. Short Term Planning

   d. Pre-Increment Planning

   e. Increment Execution

7. Which collection of software applications is the primary tool used by the Mission Operations Directorate (MOD) to perform Space Station planning and analyses?

   a. Consolidated Planning System (CPS)

   b. Station Operations Data File (SODF)

   c. Mission Operations Directorate Engineering and Logistics System (MODELS)

   d. Integrated Planning System (IPS)

Appendix A
Acronyms

AA	Antenna Assembly
AAA	Avionics Air Assembly
AAEF	Aquatic Animal Experiment Facility
ABC	Audio Bus Coupler
AC	Assembly Complete
ACS	Atmosphere Control and Supply Assembly/Contingency System
ACU	Arm Control Unit
	Attitude Control Subsystem
	Audio Communication Unit
AFEX	Advanced Furnace for Microgravity Experiment with X-ray radiography
AFR	Anchor Foot Restraint
AHST	Advanced Human Support Technology
ALSP	Advanced Life Support Pack
AMP	Ambulatory Medical Pack
APAS	Androgynous Peripheral Attach System
APCU	Assembly Power Converter Unit
APFR	Articulating Portable Foot Restraint
APM	Attached Pressurized Module
APS	Automated Payload Switch
AR	Atmosphere Revitalization
ARCU	American-to-Russian Converter Unit
ARIS	Active Rack Isolation System
ASC	Aisle Stowage Container
ASCR	Assured Safe Crew Return
ASI	Italian Space Agency
ATU	Audio Terminal Unit
AUAI	Assembly-Contingency/UHF Audio Interface
AVU	Artificial Vision Unit
BC	Bus Controller
BCA	Battery Charger Assembly
BCDU	Battery Charge/Discharge Unit
BEE	Base End Effector
	Basic End Effector
BGA	Beta Gimbal Assembly
BIT/BITE	Built-in Test/Equipment
BP	Blood Pressure
BSA	Battery Stowage Assembly
BSP	Baseband Signal Processor

BTF	Biotechnology Facility
C&C	Command and Control
C&C MDM	Command and Control Multiplexer/Demultiplexer
C&T	Communication and Tracking
C&TS	Communication and Tracking System
C&W	Caution and Warning
C/L	Crew Lock
CADU	Channel Access Data Unit
CAM	Centrifuge Accommodation Module
CAS	Common Attach System
CB	Control Bus, Clean Bench
CBEF	Cell Biology Experiment Facility
CBM	Common Berthing Mechanism
CC	Central Computer
CCAA	Common Cabin Air Assembly
CCD	Cursor Control Device
CCPK	Crew Contaminant Protection Kit
CCTV	Closed Circuit Television
CDH	Command and Data Handling
CDRA	Carbon Dioxide Removal Assembly
CDS	Continuous Data Steam
CETA	Crew and Equipment Translation Aid
CIR	Combustion Integrated Rack
CHeCS	Crew Health Care System
CHRS	Central Heat Rejection System
cm	centimeter
CM	Crewmember
CMG	Control Moment Gyroscope
CMILP	Consolidated Maintenance Inventory Logistics Planning
CMO	Crew Medical Officer
CMRS	Crew Medical Restraint System
CMS	Countermeasure System
CO_2	Carbon Dioxide
COF	Columbus Orbital Facility
COR	Communications Outage Recorder
COTS	commercial-off-the-shelf
COU	Concept of Operations and Utilization
COUP	Consolidated Operations and Utilization Plan
CPC	Control Post Computer
CPS	Consolidated Planning System
CR	Centrifuge Rotor
CRPCM	Canadian Remote power Control Module
CRV	Crew Rescue Vehicle
CSA	Canadian Space Agency
CSA-CP	Compound-Specific Analyzer - Combustion Products

CSA-H	Compound-Specific Analyzer - Hydrazine
CTRS	Conventional Terrestrial Reference System
CVIU	Common Video Interface Unit
CVT	Current Value Table
CWC	Contingency Water Collection
CWS	Caution and Warning Software
D&C	Display and Control
DAIU	Docked Audio Interface Unit
DC	Docking Compartment
DCM	Display and Control Module
DCSU	Direct Current Switching Unit
DDCU	Direct Current-to-Direct Current Converter Unit
DMI	Designated Item
DSM	Docking and Stowage Module
E/L	Equipment Lock
EACP	EVA Audio Control Panel
EATCS	External Active Thermal Control System
ECG	Electrocardiogram
ECLSS	Environmental Control and Life Support System
ECU	Electronics Control Unit
EDDA	EMU Don/Doff Assembly
EE	End Effectors
EEL	Emergency Egress Lights
EETCS	Early External Thermal Control System
EF	Exposed Facility
EFA	Engineering Feasibility Assessment
EHS	Environmental Health System
EIOCU	Enhanced Input/Output Control Unit
ELF	Electrostatic Levitation Furnace
ELM-ES	Experiment Logistic Module - Exposed Section
ELM-PS	Experiment Logistic Module - Pressurized Section
ELOC	Extended Loss of Communication
EMMI	EVA Man-Machine Interface
EMU	Extravehicular Mobility Unit
ER	Extravehicular Robotics
EPCE	Electrical Power Consumer Equipment
EPS	Electrical Power System
ESA	European Space Agency
ETCS.	External Thermal Control System
ETOV	Earth-to-Orbit Vehicle
ETVCG	External Television Camera Group
EVA	Extravehicular Activity
EV CM	Extravehicular Crewmember

EV-CPDS	Extravehicular-Charged Particle Directional Spectrometer
EVSU	External Video Switch Unit
EXPRESS	EXpediate the PRocess of Experiments to Space Station
FCF	Fluids and Combustion Facility
FCR	Flight Control Room
FCS	Flight Crew Systems
FCT	Flight Control Team
FDIR	Fault Detection, Isolation, and Recovery
FDPA	Flight Dynamics Planning and Analysis
FDS	Fire Detection and Suppression
FEL	First Element Launch
FF	Free Flyer
FGB	Functional Cargo Block
FIR	Fluids Integrated Rack
FPEF	Fluid Physics Experiment Facility
FRCB	Flight Rule Control Board
FRGF	Flight Releasable Grapple Fixture
GR&C	Ground Rules and Constraints
GCTC	Gagarin Cosmonaut Training Center
GF	Grapple Fixture
GFI	Ground Fault Interrupter
GHF	Gradient Heating Furnace
GLA	General Luminaire Assembly
GLONASS	Global Navigation Satellite System
GNC	Guidance, Navigation, and Control
GPC	General Purpose Computer
GPS	Global Positioning System
GR&C	Generic Groundrules, Requirements, and Constraints
GUI	Graphical User Interface
Hab	Habitation Module
HC	Hand Controller
HDR	High Data Rate
HEA	Handrail Equipment Anchor
HEPA	High Efficiency Particulate Air
HGA	High Gain Antenna
HHR	Habitat Holding Racks
HMS	Health Maintenance System
HRF	Human Research Facility
HRFM	High Rate Frame Multiplexer
HRM	High Rate Modem
I/O	Input/Output

I	Increment
IAA	Intravehicular Antenna Assembly
IAC	Internal Audio Controller
IAS	Internal Audio Subsystem
ICM	Interim Control Module
IDRD	Increment Definitions and Requirements Document
IEA	Integrated Equipment Assembly
IEPT	International Execute Planning Team
IF	Intermediate Frequency
IFM	In-Flight Maintenance
IGA	Inter-Government Agreement
IMARS	ISS MOD Avionics Reconfiguration System
IMMI	IVA Man-Machine Interface
IMS	Inventory Management System
IMV	Intermodule Ventilation
IOCU	Input/Output Controller Unit
IOP	Integrated Operations Plan
IP	International Partner
IPS	Integrated Planning System
IPT	Integrated Product Team
IRU	In-flight Refill Unit
ISPR	International Standard Payload Rack
ISS	International Space Station
ISSPO	International Space Station Program Office
ITCS	Internal Thermal Control System
ITF	Isothermal Furnace
ITS	Integrated Truss Structure
IV	Intravenous
IVA	Intravehicular Activity
IV-CPDS	Intravehicular-Charged Particle Directional Spectrometer
IVSU	Internal Video Switch Unit
JEM	Japanese Experiment Module
JEM EF	Japanese Experiment Module Exposed Facility
JEM PM	Japanese Experiment Module Pressurized Module
JEMRMS	Japanese Experiment Module Remote Manipulator System
JEU	Joint Electronics Unit
JOPA	Joint Operations Planning Agreement
JSC	Lyndon B. Johnson Space Center
KhSC	Khrunichev Space Center
km	kilometer
KSC	Kennedy Space Center
Ku-band	Ku-Band Subsystem
L	Launch

Lab	Laboratory Module
LAN	Local Area Network
LB	Local Bus
LBNP	Lower Body Negative Pressure
LCA	Lab Cradle Assembly
LDCR	Long Duration Crew Restraint
LDFR	Long Duration Foot Restraint
LDR	Low Data Rate
LDU	Linear Drive Unit
LED	Light Emitting Diodes
LEE	Latching End Effector
LGA	Low Gain Antenna
LOS	Loss-of-Signal
LRU	Line Replaceable Unit
LSAR	Logistics Support Analysis Records
LSE	Laboratory Support Equipment
LSG	Life Sciences Glovebox
LSM	Life Support Module
LTL	Low Temperature Loop
LTU	Load Transfer Unit
LVLH	Local Vertical/Local Horizontal
MA	Main Arm
MAS	Microbial Air Sampler
MBF	Mission Build Facility
MBM	Manual Berthing Mechanism
MBS	Mobile Remote Servicer Base System
MBSU	Main Bus Switching Unit
MCA	Major Constituent Analyzer
MCAS	MBS Common Attach System
MCC	Mission Control Center
MCC-H	Mission Control Center-Houston
MCC-M	Mission Control Center-Moscow
MCS	Motion Control System
MCU	MBS Computer Unit
MDM	Multiplexer/Demultiplexer
MEC	Medical Equipment Computer
MELFI	Minus Eighty degrees Celsius Laboratory Freezer
MIM	Multi-Increment Manifest
MIP	Mission Integration Plan
MITP	Multilateral Increment Training Plan
MM/OD	Micrometeoroid/Orbital Debris
MMI	Man-Machine Interface
MOD	Mission Operations Directorate
MODELS	Mission Operations Directorate Engineering and Logistics

	System
MOU	Memorandums of Understanding
MPEV	Manual Pressure Equalization Valve
MPLM	Multi-Purpose Logistics Module
MSD	Mass Storage Device
MSFC	Marshall Space Flight Center
MSG	Microgravity Science Glovebox
MSRF	Materials Science Research Facility
MSS	Mobile Servicing System
MT	Mobile Transporter
MTBF	Mean Time Between Failures
MTCL	MT Capture Latch
MTL	Moderate Temperature Loop
MUT	Multi-Use Tether
MWA	Maintenance Work Area
MWS	Mini-Workstation
N_2	Nitrogen
NASA	National Aeronautics and Space Administration
NASDA	National Space and Development Agency (Japan)
NiH_2	Nickel Hydrogen
NiCd	Nickel Cadmium
Nm	Newton-meter
NTSC	National Telemetry/Television Standards Committee
O&PE	Operational and Personal Equipment
O_2	Oxygen
OCCS	Onboard Complex Control System
ODF	Operations Data File
OE/V	OSTP Editor/Viewer
OFA	Operations Feasibility Assessment
OGA	Oxygen Generator Assembly
OIU	Orbiter Interface Unit
OOCI	OSTP/ODF Crew Interface
OOM	On-Orbit Maintenance
OOS	On-orbit Operations Summary
ORCA	Oxygen Recharge Compressor Assembly
ORU	Orbital Replacement Unit
ORUTD	Orbital Replacement Unit Transfer Device
OSCA	Onboard Spacesuit Control Assembly
OSO	Operations Support Officer
OSTP	Onboard Short Term Plan
OTCM	ORU/Tool Change Out Mechanism
P&S	Pointing and Support
PAS	Payload Attach System

PAV	Process Air Valve
PBA	Portable Breathing Apparatus
PCA	Pressure Control Assembly
PCAP	Spacelab Payload Crew Activity Plan
PCBA	Portable Clinical Blood Analyzer
PCMCIA	Potable Computer Memory Card International Adapter
PCS	Portable Computer System
PCU	Plasma Contactor Unit
PCWQM	Process Control and Water Quality Monitor
PDAC	Procedures Development and Control
PDGF	Power and Data Grapple Fixture
PDIM	Power and Data Interface Module
PEP	Portable Emergency Provision
PFCS	Pump and Flow Control Subassembly
PFE	Portable Fire Extinguisher
PG	Product Group
PIA	Payload Integration Agreement
PIM	Payload Integration Manager
PIP	Payload Integration Plan
PLSS	Primary Life Support System
PM	Pressurized Module
PMA	Pressurized Mating Adapters
PMCA	Power Manager Controller Application
POA	Payload/ORU Accommodation
POC	Payload Operations Complex
POCC	Payload Operations Control Center
PODF	Payload Operations Data File
POIC	Payload Operations Integration Complex
	Payload Operations Integration Center
POIF	Payload Operations and Integration Function
POST	Power On Self-Test
PP	Planning Period
PPA	Pump Package Assembly
PPS	Primary Power System
PSA	Power Supply Assembly
psid	pounds per square inch differential
psig	pounds per square inch gauge
PTCS	Passive Thermal Control System
PTU	Pan/Tilt Unit
PUL	Portable Utility Light
PV	Photovoltaic
PVA	Photovoltaic Array
PVCU	Photovoltaic Control Unit
PVM	Photovoltaic Module
PVR	Photovoltaic Radiator

PVTCS	Photovoltaic Thermal Control System
PWP	Potable Water Processor,
	Portable Work Platform
PYR	Pitch, Yaw, and Roll
QD	Quick Disconnect
QDM	Quick Don Mask
R&D	Rendezvous and Docking
R&MA	Restraints and Mobility Aid
R/P	Receiver/Processor
R-S	Reed-Solomon
RACU	Russian-to-American Converter Unit
RAIU	Russian Audio Interface Unit
RAM	Radiation Area Monitor
	Random Access Memory
RBI	Remote Bus Isolator
RCS	Reaction Control System
RED	Resistive Exercise Device
RF	Radio Frequency
RFCA	Rack Flow Control Assembly
RFG	Radio Frequency Group
RGA	Rate Gyro Assembly
RHA	Rack Handle Assembly
RHC	Rotational Hand Controller
RM	Research Module
RMS	Remote Manipulator System
ROS	Russian Orbital Segment
RPC	Remote Power Controller
RPCM	Remote Power Controller Module
RPDA	Remote Power Distribution Assembly
RPF	Robotics Planning Facility
RS	Russian Segment
RSA	Russian Space Agency
RSC-E	Rocket Space Corporation-Energia
RS MCS	Russian Segment Motion Control System
RSP	Respiratory Support Pack
	Resupply Stowage Platform
RSTS	Rack Standalone Temperature Sensor
RSU	Roller Suspension Unit
RT	Remote Terminal
RTAS	Rocketdyne Truss Attach System
RUPSM	Resource, Utilization Planning and System Models
RWS	Robotic Workstation

S-band	S-Band Subsystem
SAFER	Simplified Aid for EVA Rescue
SAR	Shared Accommodations Rack
SARJ	Solar Alpha Rotary Joint
SAW	Solar Array Wing
SCI	Signal Conditioning Interface
SCU	Sync and Control Unit
SDFR	Short Duration Foot Restraint
SDS	Sample Delivery System
SFA	Small Fine Arm
SFCA	System Flow Control Assembly
SHFE	Space Human Factors Engineering
SLD	Subject Load Device
SLP	Space Lab Pallet
SM	Service Module
SMCC	SM Central Computer
SOC	State of Charge
SODF	Systems Operations Data File
SOV	Shutoff Valve
SPCE	Service Performance and Checkout Equipment
SPCF	Solution/Protein Crystal Growth Facility
SPD-1553B	Serial Parallel Digital-1553B
SPDA	Secondary Power Distribution Assembly
SPDM	Special Purpose Dexterous Manipulator
SPG	Single Point Ground
SPIP	Station Program Implementation Plan
SPP	Science Power Platform
SPS	Secondary Power System
SSAS	Segment-to-Segment Attach System
SSBRP	Space Station Biological Research Project
SSC	Station Support Computer
SSCS	Space-to-Space Communication System
SSE	Space Station Eyewash
SSK	Surface Sampler Kit
SSRMS	Space Station Remote Manipulator System
SSSR	Space-to-Space Station Radio
SSU	Sequential Shunt Unit
STEA	Seat Track Equipment Anchor
STP	Short Term Plan
SVS	Space Vision System
TC	Terminal Computer
TCCS	Trace Contaminant Control Subassembly
TCS	Thermal Control System
TDRS	Tracking and Data Relay Satellite

TDRSS	Tracking and Data Relay Satellite System
TEA	Torque Equilibrium Attitude
TEPC	Tissue Equivalent Proportional Counter
TERA	Temporary Equipment Restraint Aid
THC	Temperature and Humidity Control
	Translational Hand Controller
TOCA	Total Organic Carbon Analyzer
TOCK	Current Orbital Coordinate System
TOPO	Trajectory Operations Officer
TRC	Transmitter/Receiver/Controller
TSM	Transport Servicing Module
TTCS	Telephone and Telegraph Communication Subsystem
TUS	Trailing Umbilical System
TVIS	Treadmill With Vibration Isolation System
TWMV	Three-Way Mixing Valve
UB	User Bus
UCS	Ultrahigh Frequency Communication System
UDM	Universal Docking Module
UHF	Ultrahigh Frequency
UIS	Universal Instrumentation System
UIA	Umbilical Interface Assembly
ULCAS	Unpressurized Logistics Carrier Attach System
UMA	Umbilical Mechanism Assembly
UOP	Utilization Operations Panel
	Utility Outlet Panel
UP	Urine Processor
U.S.	United States
USOS	United States Orbital Segment
	United States Onboard Segment
	United States On-Orbit Segment
VBSP	Video Baseband Signal Processor
VDS	Video Distribution Subsystem
VIS	Vibration Isolation System
VOA	Volatile Organic Analyzer
VRA	Vent and Relief Assembly
VTR	Video Tape Recorder
VS	Video System
VSU	Video Switch Unit
WMK	Water Microbiology Kit
WORF	Window Observational Research Facility
WRM	Water Recovery and Management
WS	Water Separator

WSA	Water Sampler Kit
WSGS	White Sands Ground Station
WVA	Water Vent Assembly
XCF	X-ray Crystallography Facility
XPOP	X-Axis Pointing Out of Plane X-Axis Perpendicular to Orbit Plane
YPR	Yaw, Pitch, and Roll
ZOE	Zone of Exclusion

Appendix B
Answers

Answers to Section 2 - CDH

1. Which mode transitions can the Station-level control software automatically execute?

   The Station-level control software can automatically transition to only two modes: to survival from any mode, and to standard from microgravity mode only.

2. Which types of crew interface computers can be used to manage Caution and Warning?

   The PCS, Control Post Computer (from the attached laptops), Russian laptop, and Robotic Workstation (also from the PCS connected to it).

3. What Caution and Warning indications are received when a fire occurs?

   Caution and Warning indications received include an emergency tone from the US ATU and the Russian ACU, the fire pushbutton on the C&W panel is backlit red and is appropriately indicated on the Russian C&W Panel, and the PCS displays the fire condition on the C&W Header and other C&W displays. The Russian laptop.

4. A crewmember can directly command a Tier 3 MDM.

   b. False - ALL commands must go through Tier 1 and Tier 2 MDMs prior to reaching Tier 3 MDMs.

5. Describe what the following bus names mean: CB CT 4, UB ORB N1 2

   CB CT 4 refers to the control bus (Tier 1 bus) that connects to Communications and Tracking equipment and it is the fourth of multiple buses. UB ORB N1 2 is the User Bus (Tier 3 bus) that connects to orbiter and Node 1 equipment and is the second of multiple buses.

Answers to Section 2 - CDH (continued)

6. What action can be expected from the CDH System if the EXT-1 MDM fails? If LA-3 fails? (i.e., What type of redundancy does the system offer to cover these failures?)

   If the Tier 2 MDM EXT-1 fails, the system will power on EXT-2 and automatically switchover to it. If the Tier 3 MDM LA-3 fails, there is no fully redundant MDM so no automatic reconfiguration will take place. Loss of capability associated with that MDM will result.

7. What are the names of the data buses that exchange information between the SMCCs and the C&C MDMs? Which buses exchange information between the SM Terminal Computers and the U.S. GNC MDMs? (Refer to Figure 2-8)

   CB GNC-1 and CB GNC-2 (Russian Bus 7 and Bus 8) exchange data between the SMCCs and the C&C MDMs. LB RS-BUS 1 and LB RS-BUS 2 exchange data between the SM Terminal Computers and the U.S. GNC MDMs.

Answers to Section 3 - EPS

1. Which of the following functions is **NOT** considered a direct function of the EPS?

   b. DC-to-AC power conversion

2. Which of the following is **incorrect**?

   a. The Sequential Shunt Unit cycles coolant through the array.

3. The function of the Solar Array Wing (SAW) is to: (circle all that apply)

   a. House and protect solar cell blankets during transport.

   c. Deploy and retract solar cell blankets while in orbit.

   d. Collect and convert solar energy into electrical power.

4. Which of the following best describes the ECU?

   b. Firmware controller responsible for deploying/retracting the solar arrays.

5. The DCSU is mounted on the _____.

   a. IEA

6. Which one of the following **BEST** describes the function of the BCDU?

   c. Regulates charging of the batteries.

7. The **primary** function of the DDCUs is to provide health and status information on primary power.

   b. False

8. SPDAs convert primary power to secondary power.

   b. False

9. If a sequential shunt unit is declared lost, which of the following would result?

   a. The power channel would soon cease to function.

10. RPDAs are used in all ISS elements.

    b. False

Answers to Section 3 - EPS(continued)

11. The DCSU provides the capability to _____.

    b. Distribute primary and secondary DC electrical power.

12. The range of motion of the beta gimbal is:

    c. 360 degrees

Answers to Section 4 - C&T

1. Which of the following is NOT a part of a command path of the ISS?

   c. VHF

2. U.S. Segment Video Subsystem receives a video input from the ROS Video Subsystem.

   b. False

3. The S-Band Subsystem has an interface with the

   b. Audio Subsystem

4. At Flight 8A, if the S-band string fails, which of the following is the MOST direct audio link to the ground?

   b. VHF System

5. U.S. payload experiment data is transmitted to the ground by

   b. Ku-band

6. Which C&T Subsystem multiplexes video and payload data for transmission to the ground?

   b. Ku-band

7. The U.S. Subsystem that links the UHF and S-band Subsystems is

   c. IAS

8. What C&T Subsystem multiplexes audio and telemetry data for transmission to the ground?

   b. S-band

9. After 6A, recorded systems telemetry normally reaches the ground through which C&T Subsystem?

   a. Ku-band

10. Primary commanding of the U.S. Systems is done through which C&T Subsystem?

    b. S-band

11. The VDS's most important interface for video data is with the

    b. SSRMS

12. C&W tones are sent to the ROS by the IAS.

    b. False

Answers to Section 4 - C&T (continued)

13. The CDH OPS LAN receives forward link data from which ISS Subsystem.

    a. Ku-band

14. The Russian Segment Communication Subsystem that transmits using a high data rate is

    c. Lira

15. What ROS Communication Subsystem cannot directly use the LUCH satellite?

    c. VHF2

16. What ISS Communication System is used to command the Station during orbiter rendezvous?

    c. UHF

17. The IAS distributes audio to the docked orbiter, EVA astronauts and _____.

    c. Russian ACUs

18. Files can be received from the ground by which C&T Subsystem?

    b. Ku-band

Answers to Section 5 - TCS

1. PTCS Multilayer Insulation (MLI) is analogous to

   c. A home's insulation.

2. Which of the following BEST describes surface coatings used throughout the Station?

   a. Must be resistant to atomic oxygen and radiation.

3. The ITCS is responsible for

   b. Rejecting waste heat from pressurized elements to the EETCS.

4. The ITCS provides which of the following to the IFHX?

   a. Heat collected from internal equipment.

5. The EETCS provides

   c. Temporary cooling for the Station until the ETCS is activated.

6. Which of the following statements if INCORRECT?

   b. The ETCS has two pumps per loop and the EETCS has one.

7. The Interface Heat Exchanger (IFHX)

   b. Is completely external to the module.

8. The temperature of the ammonia in the EETCS loops

   c. Is maintained by bypassing some of the ammonia around the radiators.

9. Which of the following statements BEST describes TCS software

   b. Monitors and controls the system.

10. The FGB ITCS is responsible for

    c. Using both air and water/glycol to provide cooling.

11. The FGB ETCS

    a. Flows through both IFHXs.

Answers to Section 6 - ECLSS

1. The Atmosphere Revitalization (AR) Subsystem is primarily responsible for

   c. Removing contaminants from the cabin atmosphere

2. At 8A, the USOS Water Recovery and Management Subsystem does all of the following except?

   c. Automatically transport water between the USOS and ROS

3. What subsystem's equipment depends on air circulation by the Temperature and Humidity Control Subsystem to operate properly?

   a. Fire Detection and Suppression

4. At Flight 8A configuration, the Station's oxygen supply is provided by the oxygen generator in the Russian segment. Which of the following is NOT available as a backup oxygen supply?

   a. The oxygen generator in the Lab

5. Which of the following delivers air samples from all USOS modules to the Major Constituent Analyzer?

   a. Sample Delivery System

6. The Common Cabin Air Assembly functions include all of the following except?

   a. Circulation of air between modules

7. During a fire event crewmembers must wear a Portable Breathing Apparatus while discharging a Portable Fire Extinguisher because

   c. The Portable Fire Extinguisher contains carbon dioxide that could cause the crewmember to lose consciousness if not directly supplied with oxygen.

Answers to Section 7 - GNC

1. Briefly describe each of the six functions that U.S./ROS GNC provides to the Space Station.

- Guidance - Tells the Station which route to follow
- State determination - Provides state vector (position and velocity at a specific time)
- Attitude determination - Provides how the Station is oriented
- Pointing and support - Passes state vector, attitude, and attitude rate data to other Station systems; provides mass properties data; calculates target angles for the U.S. solar array alpha and beta joints; calculates Sun and TDRSS line of sight and line-of-sight rate vectors, along with rise and set times; provides GPS time to the C&C MDM to synchronize timing in all MDMs
- Translational control - Provides for desired altitude by performing reboosts/deboosts and also enables the Station to maneuver out of the way of orbital debris
- Attitude control - Provides for control of the Station's attitude using both propulsive and nonpropulsive control

2. For the following Station modes, determine which effector(s) may be used.

   a. CMGs are used for attitude control during microgravity operations, because if thrusters were to be fired, the microgravity environment would be destroyed.

   b. No type of propulsive device would be used in drift mode. CMGs could be kept operational as long as no torques are created on the Station.

   c. For attitude hold, it is possible to use CMGs or SM thrusters, or the combination of CMGs and SM thrusters. The Progress thrusters are also technically available for Station attitude control.

   d. Depending on the amount of fuel available for Progress main engine, it is possible to use Progress main engine or Progress thrusters for debris avoidance. When there is no Progress, the SM main engines may be used to raise the Station altitude.

   e. Nominally, the Progress main engines are used for reboost, with the Progress thrusters as a backup.

3. Summarize the limitations of nonpropulsive attitude control and how these limitations may be overcome.

   a. CMGs become saturated (a point where the external torques in a particular direction exceed the counter capability of the CMGs) and are no longer able to counter the effects of the external torques on the Station. Russian thrusters are fired in a calculated manner to desaturate the CMGs.

Answers to Section 7 - GNC (continued)

b. CMGs require a longer period of time to perform maneuvers then thrusters do. A nonpropulsive attitude maneuver requires at least three CMGs for full control capability and two for limited capability.

4. Describe the method used by U.S. GNC software to balance disturbance torques acting on the Station.

   U.S. GNC software balances disturbance torques acting on the Station by repositioning the spin axis of all operational CMGs.

5. Describe (and/or illustrate) the attitude regime that is used to counteract the primary external torques on the Station.

   Orbit average TEA is an attitude where all the torques balance out to zero over the course of an orbit to counteract the external torques acting on the Station (i.e., from Figure 7-3 below).

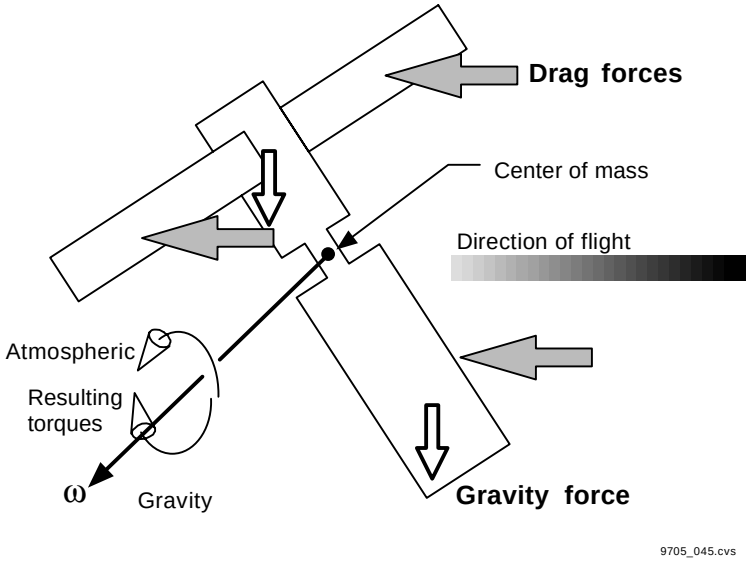

Figure 7-3. Major Station torques

6. Given the following scenarios, state which attitude regime most likely:

   a. XPOP

   b. TEA

   c. XPOP

   d. TEA

   e. XPOP

Answers to Section 7 (continued)

7. Describe the implications for the appropriate systems in each of the following events.

   a. The GNC System loses the capability to communicate with CMG-4, but still has the capability to communicate with three other CMGs.

   b. The capability to exchange the detailed GNC commands and navigation and control data between the U.S. GNC MDMs and RS TCs are lost, if both LB RS-1 and LB RS-2 are lost.

   c. If P&S is degraded, several systems are effected.

   - EPS: Possible power degradation may occur.
   - C&T: Possible high-rate S-band and Ku-band communication lost.
   - Robotics: The changes in mass properties could not be properly tracked, causing attitude control degradation, so the robotics operations may be affected.

   d. Failure of the moderate temperature loop could result in the loss of both GPS R/Ps, one GNC MDM, and one C&C MDM.

   e. Information of the unscheduled venting would be sent to the GNC Flight Controllers, so they can determine the force and torque applied to the Station by this venting, and what course of actions needs to be taken. The venting may cause undesirable Station rotation, which can be counteracted by CMGs or thrusters.

Answers to Section 8 - Robotics

1. Match the Robotics Systems and Subsystems with the correct developing agency.

   __4__ a. Small Fine Arm (SFA)

   __3__ b. Mobile Transporter (MT)

   __2__ c. European Robotic Arm (ERA)

   __1__ d. Space Station Remote Manipulator System (SSRMS)

2. Match the Robotics Systems with the correct prime function.

   __2__ a. European Robotic Arm (ERA)

   __1__ b. Mobile Servicing System (MSS)

   __3__ c. JEM Remote Manipulator System (JEMRMS)

3. Which of the following Robotics Systems does NOT use hand controllers?

   a. European Robotic Arm (ERA)

4. Once the Mobile Transporter (MT) arrives on Flight 8A, the Space Station Remote Manipulator System (SSRMS) can be transported on the MT along the truss.

   b. False

Answers to Section 9 - Structures & Mechanisms

1. Which of the following structural connections will **not** apply to the Space Station configuration at 8A?

   c. U.S. Lab to the PMA 1

2. Which of the following structures is **not** a primary structure?

   a. Micro-Meteoroid Orbital Debris Shield

3. Pressurized elements are categorized as primary or secondary structures by which of the following criteria?

   c. By the structural loads they are designed to handle

4. If debris hits a Station module, the Micro-Meteoroid Orbital Debris (MM/OD) will

   b. Make the debris break up into small fragments and create a debris cloud.

5. Identify the following mechanisms with their functions:

1. Probe/Drogue and Hybrid	f) Used to mate all Russian modules together including some SPP segments
2. CAS	e) Used to attach exposed payload and logistics carriers to the truss
3. CBM and MBM	a) Used to mate one pressurized module to another on the U.S.-developed side of the Station
4. LCA	c) Used to attach the S0 truss assembly to the U.S. Lab.
5. SSAS and RTAS	b) Used to attach the Integrated Truss Structure segments together.
6. APAS	d) Used to dock the Orbiter or the FGB to a Pressurized Mating Adapter.

1.

Answers to Section 10 - Payloads

1. By conducting Materials Science research onboard ISS we can expect to benefit through

   d. improved understanding of the properties of matter

2. The U.S. Laboratory module has a capacity for 24 rack locations. How many locations especially designed to support experiments will Payload racks occupy?

   c. 13

3. Which IP Partner is responsible for constructing the CAM?

   b. NASDA

4. Which of the following best characterizes a Facility Class Payload?

   a. Long-term/permanent Station resident that provides services to a specific type of research

Answers to Section 11 - EVA

1. Indicate which of the following characteristics correspond to either the EMU or the ORLAN::

_1_	a.	Nominally pressurized to 4.3 psid	1. EMU
_1_	b.	Modular components	2. ORLAN
_2_	c.	After useful life, burns up on re-entry	
_1_	d.	Usually requires a dedicated IV CM to assist in donning	
_1_	e.	Suit parameters displayed on DCM	
_2_	f.	Nominally pressurized to 5.7 psid	

2. False. The Equipment Lock is included in the volume which will nominally be depressed to vacuum so the crew can go EVA.

3. True. The Mini-Workstation (MWS) can be used to provide loose CM restraint.

4. True. The Joint Airlock arrives on Flight 7A.

5. According to the EVA Flight Rules, the basic types of ISS EVAs are:

   b. Scheduled and Contingency*

Answers to Section 12 - OOM

1. __(In-Situ)_____ Internal water loop repair

2. _(Contingency)__ Module pressure vessel leak repair

3. _(Preventive)____ Scrub module internal walls

4. _(Corrective)____ Remove and replace malfunctioning MDM

5. __(Preventive)__ Module filter cleaning

Notes:

Question 1. The best answer is In-Situ, because one cannot remove the water loop and carry it to another location for repairs. If water is leaking from the loop at a large rate, then the maintenance can also be Contingency, because it requires immediate action. Since the water loop is also being restored to its original condition, the maintenance can also be Corrective.

Question 2. Since the first concern here is crew safety, repairs need to be performed immediately and the maintenance is Contingency, however, the leak also has to repaired at the point where it is leaking, so this can also be considered In-Situ maintenance. Finally, since the vessel wall is being restored to it original condition, the maintenance can be Corrective.

Question 3. Since this is routine repair, is not time critical and the MDM can be moved to another location for repairs, the best answer here is Corrective, because we are restoring MDM functionality to its original condition.

Question 4. Since this must be done at specified, regular intervals, the maintenance being performed is Preventive.

Missing feedback on one question. Will supply later.

Answers to Section 13 - FCS

1. Which of the following is not a subsystem of Crew Systems?

   d. Internal Audio System

2. Which of the following is not a subsystem of Crew Systems?

   c. Water Recovery and Management

3. Which of the following statements is (are) true?

   b. Portable Emergency Provisions are used to sustain the crew in the event of an emergency.

4. Which of the following statements is (are) true?

   a. Restraints and Mobility Aids are used to support crew translation.

5. Which of the following does not interface with the Galley/Food Subsystem?

   c. C&T (Communications and Tracking).

6. Which of the following subsystems interfaces with the on-board Water Systems?

   b. Personal hygiene

7. **Fill in the blank:** The Decals and Placards Subsystem includes items that display location coding information, crew procedures, warning labels, and stowage information.

8. **Fill in the blank:** The Galley and Food Subsystem supports the nutritional needs of the crew.

9. Match the hardware subsystems with their components

1. Restraints and Mobility Aids Subsystem	h. Equipment bag
2. Portable Emergency Provisions Subsystem	d. PBA
3. Housekeeping & Trash Management Subsystem	c. Biocide wipes
4. Lighting Subsystem	e. Task light assembly
5. Operational & Personal Equipment Subsystem	b. Compact disk player
6. Galley and Food Subsystem	a. Meal preparation utensils

Answers to Section 13 - FCS (continued)

10. Match the hardware subsystems with their components

1. Stowage Subsystem	b. Stowage tray
2. Decals and Placards Subsystem	h. Warning labels
3. Closeouts Subsystem	a. Rack volume closeout
4. Personal Hygiene Subsystem	f. Waste management
5. Wardroom Subsystem	c. Dining table
6. Inventory Management Subsystem compartment	g. Bar code labels

Answers to Section 14 - CHeCS

1. What is the purpose of the CHeCS?

   b. To ensure the health, safety, well-being, and optimal performance of the ISS crew

2. The purpose of the CHeCS Health Maintenance System (HMS) is to provide

   a. Preventive, diagnostic, and therapeutic care, as well as patient transport capability

3. Which of the following CHeCS components will <u>not</u> be on ISS by Flight 8A?

   b. Incubator

4. The purpose of the CHeCS Countermeasures System (CMS) is to prevent

   c. Cardiovascular and musculoskeletal deconditioning

5. Which of the following CHeCS CMS components will not available by Flight 8A?

   c. Lower Body Negative Pressure (LBNP)

Answers to Section 15 - Ops & Planning

1. What planning product represents the integrated plan to be viewed and executed onboard Station, and contains the specific activities that will be performed by the onboard crew?

   The Onboard Short Term Plan (OSTP)

2. What is the purpose of the Station Operations Data File (SODF)?

   The SODF is the repository of all U.S. Space Station onboard and ground execution procedures. Both crew and controllers will use the SODF to access procedures required to operate the Space Station.

3. During what time period is the Short Term Plan (STP) developed, and how long is the operations period the STP covers?

   The STP is developed the week before operations, and covers 1 week of operations.

4. What tool will be used by onboard crew and ground controllers to track location and quantity of equipment and supplies onboard ISS?

   The Inventory Management System (IMS).

5. Which of the following provides on-line access via the Internet to operations products and schedules?

   d. Integrated Operations Plan (IOP)

6. Which of the following is not a phase of ISS planning and operations?

   c. Short Term Planning

7. Which collection of software applications is the primary tool used by the Mission Operations Directorate (MOD) to perform Space Station planning and analyses?

   d. Integrated Planning System

Appendix C
ISS Reference Frames

C.1 Station Reference Frames

There are a multitude of coordinate frames being used on the Station to coordinate activities such as robotics operations, payload operations, and the Station's United States (U.S.) Guidance, Navigation, and Control (GNC) software processing. Furthermore, both the Russian and American GNC software use different reference frames.

However, for the purpose of providing a common, generic standard for all crew displays and crew/ground communications, a single, standard reference frame has been designated. All ***activities requiring reference to Station body-centered coordinates*** should reference the ***Space Station Analysis Coordinate System*** specified later in this document. Also, ***overall crew/ground communications on attitudes should be described based on the standard Euler angle sequence for Station of yaw, then pitch, then roll from a 0,0,0 Local Vertical/Local Horizontal (LVLH) coordinate system.*** (In some cases, communications may also be based on Yaw, Pitch, and Roll (YPR) from a 0,0,0 X-Axis Perpendicular to Orbit Plane (XPOP) attitude.) Note that this is different from the Space Shuttle, which uses a roll, pitch, and yaw Euler sequence.

Although these are the most important coordinate systems for Station operations, all coordinate systems relevant to both U.S. and Russian Orbital Segment (ROS) GNC operations are covered in this appendix.

The ***J2000*** and ***LVLH*** reference frames are commonly used by GNC to describe the Station's attitude, and an international agreement requires that the ***GNC interfaces between the ROS and U.S. GNC systems occur in these frames***. X-Axis Perpendicular to Orbit Plane (XPOP), a special reference frame for Station orientation used during the early assembly period, is briefly outlined below and then covered in more detail for operational impacts later in the GNC Training Manual. Information on all the other frames is provided to distinguish between the reference frames used by prior ROS and U.S. programs. More detailed information on all of the U.S. Station reference frames can be found in SSP 30219, Rev. D, Space Station Reference Coordinate Systems. *(Note: Detailed Russian coordinate systems information will possibly be referenced in Rev. E of SSP 30219 or in the Gagarin Cosmonaut Training Center (GCTC)-supplied Motion Control System Training Manual.)*

C.2 U.S. Reference Frames Used By GNC

C.2.1 J2000

J2000 is an inertial right-handed Cartesian coordinate system centered on the Earth (see Figure C-1)**.** ***The X-axis is directed towards the mean vernal equinox at noon on January 1, 2000. The Z-axis points out the North pole along the Earth's rotational axis***. The Y-axis completes

the right-handed coordinate system. J2000 is similar to the M50 inertial coordinate system used by the Space Shuttle Program, but has been updated for the apparent position of the stars in the year 2000 (due to precession).

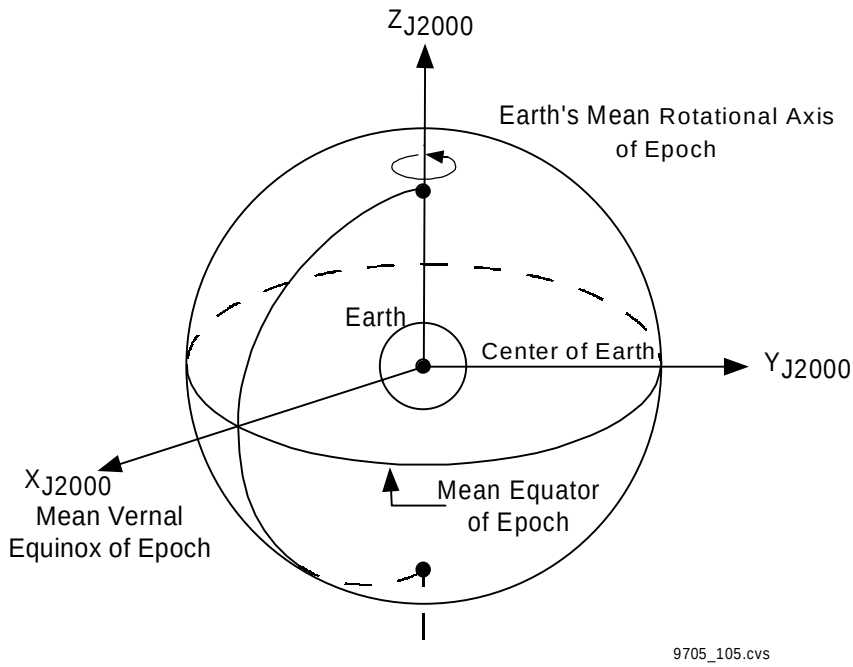

Figure C-1. J2000 reference frame

C.2.2 Local Vertical/Local Horizontal

The LVLH reference frame is shown in Figure C-2. ***The LVLH frame has its origin at the vehicle center of mass. The positive Z-axis points nadir (toward the center of the Earth). The positive Y-axis points perpendicular to the orbit plane, opposite the orientation of the orbit angular momentum vector. The positive-X axis is the horizontal projection of the velocity vector*** and completes the right-handed coordinate system. Notice that because the velocity vector rotates, to remain tangential to the orbit, the LVLH system also rotates about the Earth. Compared to a J2000 frame, the LVLH frame for the Station, shown in the Figure C-2, makes one complete rotation during each orbit. This results in a 4 deg/min pitch of the LVLH frame, with respect to the J2000 coordinate system.

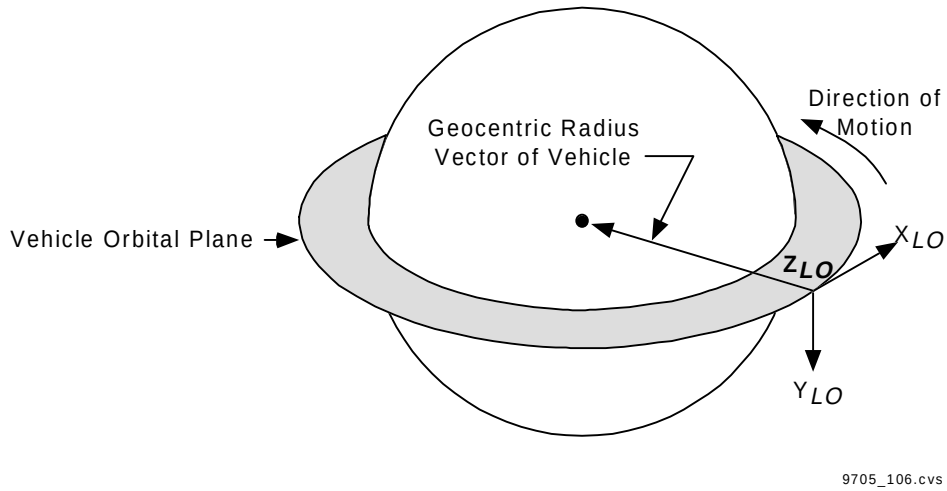

Figure C-2. LVLH reference frame

C.2.3 X-Axis Perpendicular to Orbit Plane

The X-Axis Perpendicular to Orbit Plane (XPOP) reference frame is shown in Figure C-3. ***XPOP is a quasi-inertial reference frame that can be visualized by a 90° yaw of the LVLH frame at orbital noon. The X-axis points out of plane, while both the Y- and Z-axes lie in the orbital plane.*** Note that unlike LVLH, which is rotating with the Station as the Station rotates about the Earth, XPOP remains fixed with the Station X-axis pointing out of plane and the Z-axis is aligned with the orbit noon vector. XPOP is a "quasi-inertial" reference frame, because as the orbital plane slowly regresses, the XPOP reference frame also regresses to keep the X-axis pointing out of the orbital plane.

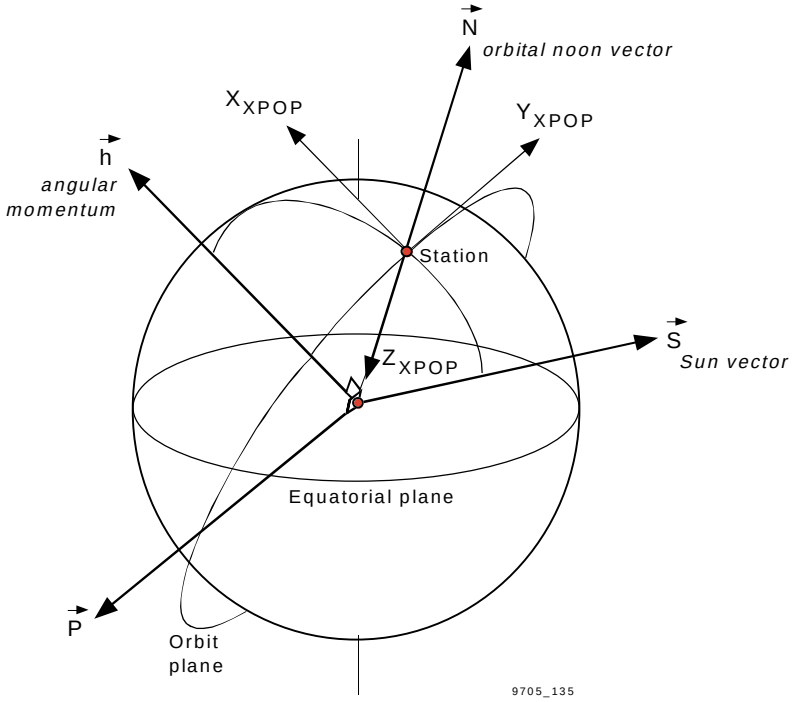

Figure C-3. XPOP reference frame

C.2.4 Conventional Terrestrial Reference System

The Conventional Terrestrial Reference System (CTRS) is the reference system used by the Global Positioning System. It is an updated Earth-fixed system that incorporates polar precession. CTRS assumes a spherical Earth and does not take any flattening factors into account. The pole of this system is known as the CIO. The Z-axis is coincident with the Earth's principal rotational axis, with the positive direction toward the CIO. The X-axis passes through the intersection of the CTRS reference equatorial plane and the CTRS reference meridian. The positive X-axis is in the direction of the CTRS reference meridian. The positive Y-axis completes the rotating right-handed Cartesian system. The CTRS coordinate system is shown in Figure C-4.

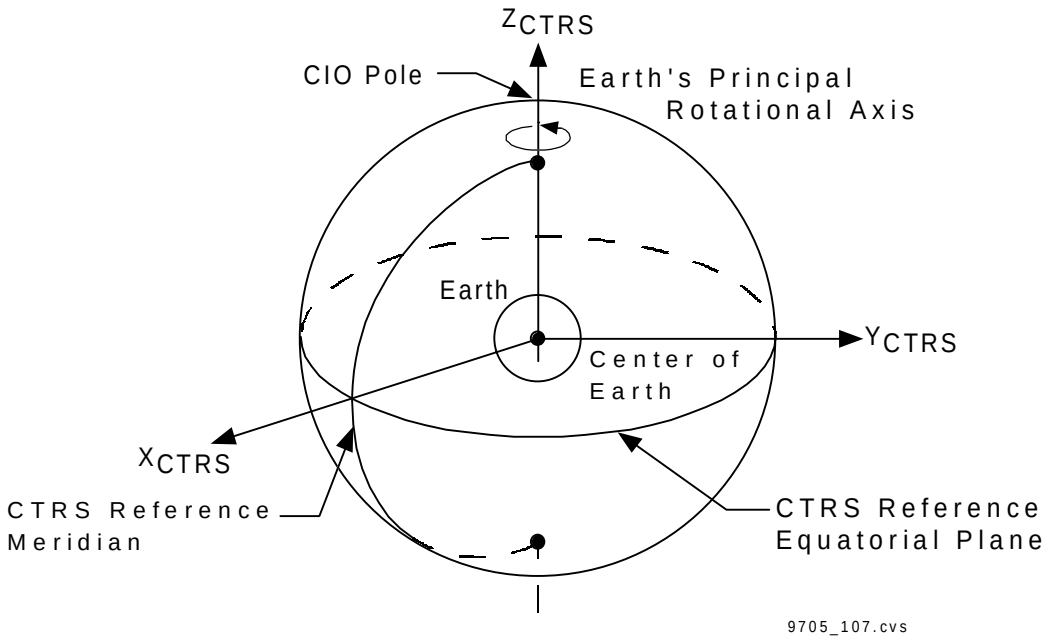

Figure C-4. CTRS coordinate system

C.3 Russian GNC Reference Frames

While the Russian Motion Control System (MCS) is active, it references all MCS activities to the following coordinate systems.

C.3.1 Orbital Coordinate System

The Orbital Coordinate System (OCK) is very similar to the U.S. LVLH reference frame. The OCK reference frame has its origin at the vehicle center of mass. Z-axis is pointing along the radius-vector connecting the ISS center of mass with the center of the Earth. X-axis lies in the orbital plane and is pointing toward the ISS velocity vector. Y-axis completes the right-handed coordinate system. Similar to the U.S. LVLH system, OCK also rotates at about 4 deg/min, with regards to J2000.

C.3.2 Current Orbital Coordinate System

The Current Orbital Coordinate System (ТОСК) is defined by taking an instantaneous "snapshot" of the Station body axes in the ОСК frame and setting this to be the new "0,0,0" ОСК axes. These newly established coordinate system axes then rotate at orbital rate.

C.3.3 Inertial Coordinate System

The Inertial Coordinate System (ИСК) is equivalent to the U.S. J2000 coordinate reference frame. It is Earth centered, with X pointing to the vernal equinox of 2000, Z pointing toward the celestial pole, and Y completing the right-hand system.

C.3.4 Current Inertial Coordinate System

The Current Inertial Coordinate System (ТИСК) is defined by taking an instantaneous "snapshot" of the Station body axes in the ИСК frame and setting this to be the new "0,0,0" ИСК axes.

C.3.5 Solar Orientation Coordinate System [CO]

The International Space Station (ISS) body axes are oriented relative to a solar coordinate system. A vehicle-centered system, this frame has the X-axis pointing at the center of the solar disk, the Z-axis perpendicular to the plane of the ecliptic and pointing toward the celestial pole, and the Y-axis completing the right-hand system.

C.3.6 Equilibrium Attitude Regime

In this frame, the axes are set in such a way that during ISS flight in this coordinate system, the integral value of the disturbing torques per one orbit is minimal. This is equivalent to basing a coordinate system relative to an orbit-average Torque Equilibrium Attitude (TEA), which is a concept covered later in this manual.

C.4 Space Station Body Axes - U.S. and ROS

It is fairly common in GNC when discussing the attitude of the Space Station to refer to the vehicle as being in an "LVLH attitude" or an "XPOP attitude." Frequently, what is implied is that the Space Station's body axes are being controlled within an attitude envelope about the LVLH or XPOP reference frame, or are most easily visualized by describing their orientation with respect to the LVLH or XPOP reference frame.

To visualize the Station's orientation with respect to the reference frame, you need to understand how the body axes are oriented on the Space Station. ***Body axes are a set of axes that remain fixed to the Space Station and therefore rotate with Station rotation.*** Figure C-5 shows how the U.S. and ROS GNC systems define the Station body axes. Both of these are just different ways to describe the Station attitude with regards to one of the reference frames.

For example, a LVLH 0,0,0 attitude means that the Station's x, y, and z body axes are aligned with the x, y, and z axes of the LVLH reference frame. An XPOP 20,5,5 attitude means that the

Station's body axes are rotated from the XPOP frame by a 20° yaw, then a 5° pitch, and then a 5° roll. This sequence depends upon the Euler angle sequence. A YPR Euler sequence of 20,5,5 is not the same as a Pitch, Yaw, and Roll (PYR) Euler sequence of 5,20,5.

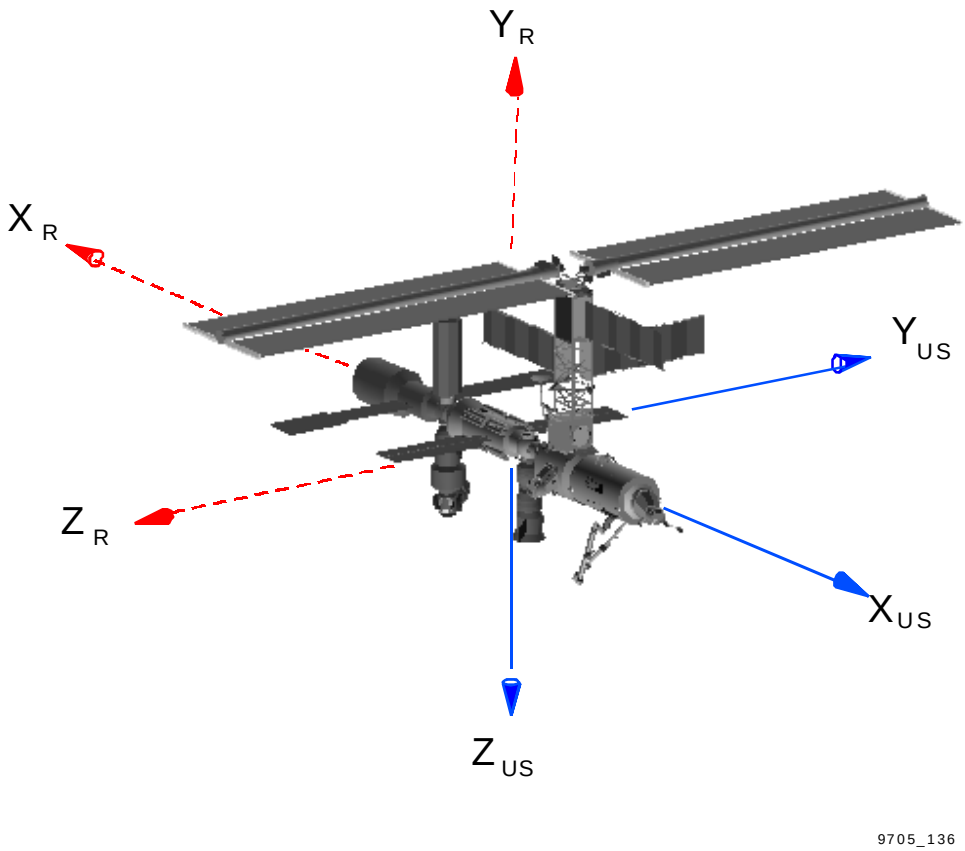

Figure C-5. Station body axis reference frame comparison

C.4.1 Space Station Analysis Coordinate System

The Station body axes are defined by the U.S., as shown in solid line on Figure C-5. The origin is located at the geometric center of the S0 truss. The positive X-axis points forward out of the "long" Station axis, the positive Y-axis points out of the starboard truss, and the positive Z-axis points out the bottom of the Station (nadir), as defined by completing the right-handed coordinate system.

C.4.2 ISS ROS Analysis Coordinate System

The Station body axes are defined by the ROS, as shown in dashed line in Figure C-5. The origin is located at the aft end of the Service Module's widest section. The positive X-axis points aft out of the "long" Station axis, the positive Y-axis points out the top of the Station (zenith), and the positive Z-axis points out of the port truss, as defined by completing the right-handed coordinate system. The ROS MCS reports Station attitude in the Space Station Analysis Coordinate System.

The U.S. GNC software has a flexible user interface so that it can operate in the J2000, LVLH, or XPOP frames while accomplishing its navigation and control roles.

Appendix D
Technical Summary Sheet

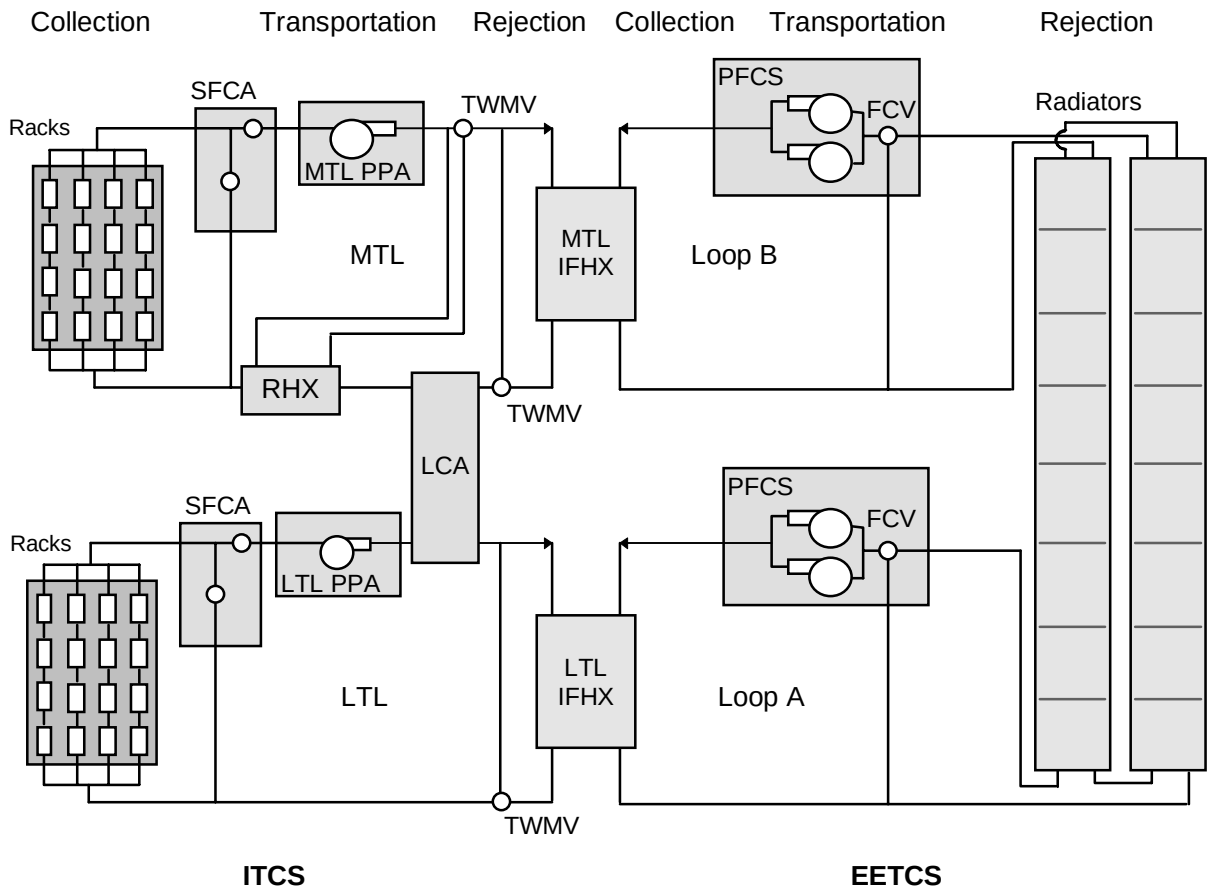

ITCS	EETCS
Two fluid loops Low temperature loop, 4 deg C (40 deg F) Moderate temperature loop, 17 deg C (63 deg F) Single-phase water	Two independent fluid loops Both loops operate at 2 to 5 deg C (35 to 41 deg F) Loop A services LT IFHX, Loop B services MT IFHX Single-phase ammonia
Heat Collection Coldplates and heat exchangers in racks and endcones – collect heat from systems and payload equipment Regen HX – Heats LT water in single-loop mode	Heat Collection IFHX – Transfers heat from ITCS In-line heaters – Add heat during startup or low heat loads
Heat Transportation PPA – Pump, fine filter, gas trap, accumulator, sensors, and PFMC RFCA – Regulates ISPR flow SFCA – Regulate inlet pressure to pump LCA – Connects LT and MT loops TWMV – Controls loop temperature Fluid lines – Rigid titanium, flexible Teflon, QDs; LT lines are insulated	Heat Transportation PFCS – Two pumps (only one operating at a time), FCV, accumulator, filters, sensors, LDI, and SCI Valves – FCV inside PFCS controls bypass flow around radiators Lines – Insulated, stainless steel, QDs
Heat Rejection IFHX – Transfers heat to EETCS	Heat Rejection Two radiators (Starboard and Trailing) on P6 Truss Reject heat to space via radiation
Redundancy Each loop is Zero-Fault tolerant (one pump per loop) System is One-Fault tolerant (two loops connectable via LCA)	Redundancy Each loop is One-Fault tolerant (two pumps in PFCS) System is Two-Fault tolerant (ITCS redundancy)
Software INT MDM – Startup, automatic control to setpoints, commands to PFMC, mode transitions, and FDIR LA MDMs – process sensor data, command valves, and FDIR	Software PVCU MDMs – Automatic control to setpoints and FDIR Node 1 MDMs – IFHX valves, shell heater control, and FDIR

	Build-Up of TCS Capabilities	Assembly TCS Activities
1A/R	Independent FGB TCS	(MCC-M)
2A	Node 1 shell heaters and dry fluid lines; PMA-1 and PMA-2 shell heaters, and Node 1 MDMs (EETCS software)	Activate Node 1, and PMA-1 shell heaters (Shuttle crew)
1R	Independent SM TCS	(MCC-M)
2A.1	none	none
3A	Z1 Truss: EETCS plumbing and four ammonia accumulators (two for each loop), trace heaters on EETCS equipment (activated on 4A)	none
2R	none	Permanent crew
4A	P6 Truss: Two PFCSs, two radiators, EETCS plumbing, and PVCU MDMs (EETCS software)	Attach P6/Z1 EETCS QDs (Shuttle EVA crew); activate and checkout EETCS Loop A and B (Ground)
5A	US Lab: ITCS, two IFHXs, system racks (heat loads), and MDMs (ITCS software)	Attach Z1/Lab EETCS QDs (Shuttle EVA crew); deploy EETCS radiators (Ground); activate and checkout Lab ITCS (Ground)
6A	MPLM: Lab outfitting (system and stowage racks), cooling to Node 1 coldplates	Add additional racks to LAB ITCS (Station crew), fill Node 1 water lines (Station crew)
7A	Airlock: Coldplates (heat loads), EMU cooling, nitrogen tanks (supply accumulators in the PPAs), and heaters	Connect Node 1/Airlock ITCS jumpers (Shuttle crew); establish ITCS Airlock flow, checkout EMU cooling loops (Shuttle crew, Ground)
4R	none	none
7A.1	MPLM: Lab outfitting (ISPRs and stowage racks)	Add additional racks to LAB ITCS (Station crew)
UF-1	MPLM: Lab outfitting (ISPRs and stowage racks)	Add additional racks to LAB ITCS (Station crew)
8A	S0 Truss: Permanent ETCS plumbing	None

Typical TCS Activities

Rendezvous/Prox Ops
- Retract EETCS Radiators

Docked Ops
- Provide ITCS cooling connections to docked MPLMs and reconfigure ITCS for MPLM ops
- Establish ITCS cooling to new racks (transition to single-loop mode during rack installation)
- Provide EMU cooling while crew is inside the Airlock

Departure
- None

Reboost
- None

Orbit Ops
- 2A+on: Monitor Node 1 thermal health, activate, monitor, and deactivate PMA shell heaters
- 4A+on: EETCS Ops
- 5A+on: EETCS and US LAB ITCS ops
- 6A+on: Node 1 coldplate ops (MPLM cooling after 6A TBD)
- 7A+on: Airlock cooling ops

Constraints and Capabilities

- No active cooling until Flight 5A.
- During assembly, some installation and activation activities become time critical due to concerns for freezing or condensation. (These concerns are continually being addressed by IPT/AIT.)
- Critical Ops are lost when: Both ITCS loops in a module are lost together; OR both EETCS (ETCS after 12A) loops are lost together.
- Cooling capacity is limited to 14 kW (max.), 8-9 kW (Nom) until ETCS activation at 12A (75 kW max).
- On 12A, EETCS is disassembled and radiators are used on PVTCS (PFCS used as backup).
- ROS thermal systems operate independent of USOS systems and they are not capable of interfacing.

D.1 ENVIRONMENTAL CONTROL AND LIFE SUPPORT SYSTEM OVERVIEW

Major Hardware	Function	First Flight	Redundancy **
Atmosphere Control and Supply	**Regulate atmospheric pressure and provide gas support to users**		
Gas Control Panel*	Provide N2/air to maintain pressure	Progress	n/a
Elektron*	Produce O2 to add to air	1R	1/2
Solid Fuel Oxygen Generator*	Produce O2 to add to air	1A/R	1/1
Oxygen/Nitrogen Tanks	Provide O2/N2 for breathing	7A	4/4 (2 per gas)
Pressure Control Assembly	O2/N2 introduction; vent atmosphere	5A	1/3
Atmosphere Revitalization	**Monitor atmospheric partial pressures and remove gaseous contaminants**		
Gas Analyzer*	Monitor O2, CO2, H2O	1A/R	1/2
Gas Analyzer*	Monitor O2, CO2, H2O, H2	1R	1/1
Carbon Monoxide Analyzer*	Monitor CO	1R	1/1
Major Constituent Analyzer	Monitor O2, N2, CO2, H2, CH4	5A	1/2
Vozdukh*	Remove CO2 from air	1R	1/2
Carbon Dioxide Removal Assembly	Remove CO2 from air	5A	1/2
Lithium Hydroxide based canisters*	Remove CO2 from air	1R	1/1
Sabatier*	Reduce CO2 & make H2O	Post 8A	1/1
Trace Contaminant Control Unit*	Remove trace contaminants from air	1R	1/2
Harmful Impurities Filter*	Remove trace contaminants from air	1A/R	1/1
Trace Contaminant Control Subassembly	Remove trace contaminants from air	5A	1/2
Temperature and Humidity Control	**Remove moisture and particulates from, control temperature of, and circulate the cabin air**		
Fan & Non-Condensing Heat Exchanger*	Circulate & cool cabin air	1A/R	4/many
Fan & Condensing Heat Exchanger*	Circulate & cool air , remove humidity	1R	2/2
Common Cabin Air Assembly	Circulate & cool air , remove humidity	5A	2/5
Cabin Air Fan	Circulate cabin air	2A	1/2
Avionics Air Assembly	Circulate & cool rack air	5A	1/many
Fire Detection and Suppression	***Detect and suppress fire events***		
Smoke Detectors	Detect smoke in cabin or racks	1A/R	10/many
Portable Fire Extinguisher	Extinguish fire	1A/R	3/many
Portable Breathing Apparatus	Provide direct O2 to crew member	1A/R	3/many
Water Recovery and Management	**Collect, store, and distribute water resources**		
Condensate Water Processor*	Recycle condensate H2O	1R	1/1
Potable Water Processor	Recycle all waste H2O	Post 8A	1/1
Hygiene Water Processor*	Recycle shower & hand wash H2O	Post 8A	1/1
Condensate Tank	Waste H2O storage	5A	1/1
Fuel Cell Water Tank	Fuel cell H2O storage	Post 8A	1/1
Urine Processor*	Remove H2O from urine	Post 8A	1/2
Commode/Urinal*	Metabolic waste collection	1R	1/3

* Russian equipment

** Total number of identical ORUs at the first flight / at assembly complete (based on Rev. D Assembly Sequence)

D.2 Key Design Concept:

U.S. ECLSS based on distributed systems, Russian ECLSS based on modular systems.

Interfaces:

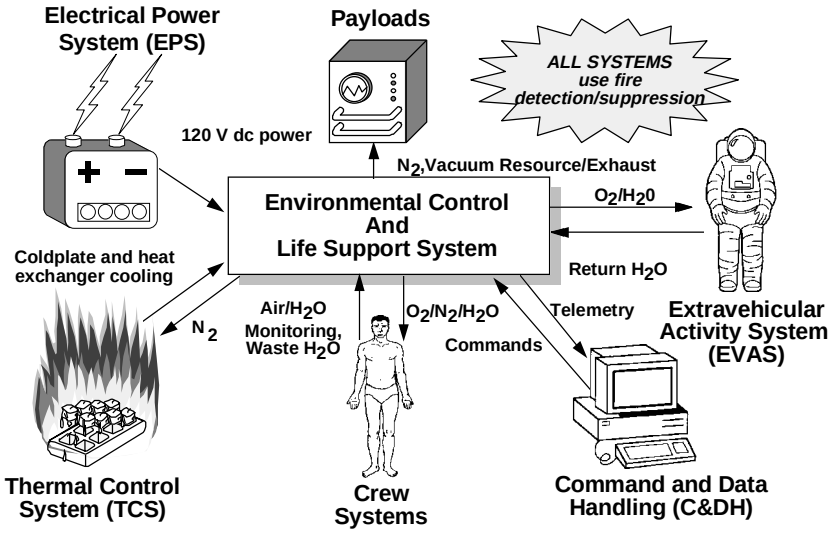

Typical Activities:

<u>Crew</u>

- Equalize pressure between volumes, such as Node 1 and vestibule
- Add gas to atmosphere from Progress gas panel
- Connect Intermodule Ventilation ducting between modules
- Connect payload racks to Lab Nitrogen System and Vacuum System
- Adjust the air temperature within a module

<u>Controller</u>

- Monitor total and partial pressures of various modules
- Activate and check-out various assemblies, such as Major Constituent Analyzer, Common Cabin Air Assembly, or Pressure Control Assembly

<u>Key Operational Constraints:</u>

- At 8A, Russian equipment is prime for atmospheric O2/N2 make-up
- EVAs must be performed out of the Russian segment until arrival of the Airlock (7A)
- Russian equipment is prime for water supply until arrival of US Habitation Module (16A)

D.3 Technical Summary Sheet

D.3.1 Payloads

The types of research planned for ISS are summarized below:

- **Life Sciences:** Study how plants and animals adjust to the absence of gravity. Conduct research which could aid in the treatments and prevention of numerous diseases and medical conditions experienced on Earth.
- **Microgravity Sciences:** Study processes which are obscured by gravity on Earth and test physical theories at levels of accuracy that are impossible on Earth. Specific disciplines of microgravity science which will be studied aboard ISS include: materials science, combustion science, fluid physics, fundamental physics, and biotechnology.
- **Space Sciences:** Seek to solve the mysteries of the universe, explore the solar system, find planets around other stars, and search for life beyond Earth. The focus of space science includes studies on solar physics, cosmic physics, astronomy, and astrophysics.
- **Earth Sciences:** Study the Earth's system and the environmental response to natural and human-induced variations in atmospheric quality, regional and global climate, geologic activity, land use and food production, and ocean and fresh water health.
- **Commercial Product Development:** Increase private sector interest and involvement in commercial space-related activities and stimulate advances in promising areas of space research and development with commercial applications.
- **Engineering Research and Technology:** Provide the opportunity for academic institutions and industry to create "test-beds" and run experiments associated with the advancement of technology and engineering research. Some of the specific areas that will be investigated are: advanced energy storage systems, advanced robotics capabilities, communication systems, electromagnetic propulsion and advanced sensors.

The following payload components are provided to support research operations on ISS

- **U.S. Laboratory Module:** NASA contribution to the ISS laboratory complement that accommodates 13 payload racks.
- **International Standard Payload Rack (ISPR):** Provides the basic housing and support structure for the mounting of payload hardware and equipment that are to be installed in the U.S. Lab and IP modules.
- **Facility Class Payloads:** A long term or permanent Station resident that provides services and accommodations for experiments in a particular science discipline.
- **EXpedite the PRocessing of Experiments to Space Station (EXPRESS):** Provides payload accommodations which allow quick, simple integration by using standardized hardware interfaces and a streamlined integration approach.
- **Laboratory Support Equipment (LSE):** Devices that are shared on a noninterference basis by multiple research users.

- **Attached Payloads:** Payloads located outside of the pressurized volume of the Space Station on the truss or the Japanese Experiment Module Exposed Facility (JEM EF).
- **Centrifuge Accommodation Module (CAM):** Laboratory module built by NASDA under NASA contract that accommodates a variable speed centrifuge and plant and animal habitats.
- **Japanese Experiment Module (JEM):** NASDA contribution to the ISS laboratory complement that accommodates 10 payload racks and 10 attached payload sites.
- **Columbus Orbital Facility (COF):** ESA contribution to the ISS laboratory complement that accommodates 10 payload racks.
- **Russian Research Modules:** RSA contribution to the ISS laboratory complement which is currently in the conceptual design phase.

The U.S. Laboratory Facility Class Payloads are as follows:

- **Human Research Facility:** HRF is a two-rack designed to support life sciences investigations using human subjects.
- **Advanced Human Support Technology:** Advanced Human Support Technology (AHST) Payloads use a single modified EXPRESS Rack. AHST payloads are divided in three major categories: Space Human Factors Engineering (SHFE), Advanced Life Support, and Advanced Environmental Monitoring and Control Payloads.
- **Space Station Biological Research Project:** SSBRP focuses on payloads designed to study the role of gravity in the evolution, development, and functions of biological processes involving cells, plants, and animals.
- **Materials Science Research Facility:** MSRF helps to conduct investigations that deal with the properties of matter and how they relate to each other.
- **Microgravity Science Glovebox:** MSG is a multiuser facility that enables users to conduct small science and technology investigations in fluid physics, combustion science, materials science, biotechnology, and space processing.
- **Fluids and Combustion Facility:** FCF payloads use low gravity to study the properties and behavior of fluids (liquids, gases and mixtures), and fundamental combustion phenomena.
- **Biotechnology Facility:** BTF supports a variety of payloads that focus on cell cultures, tissue engineering, protein crystal growth, biochemical separations, and micro-carrier and micro-capsule preparation.
- **Window Observational Research Facility:** WORF provides a crew workstation at the U.S. Laboratory window to support research-quality optical Earth observations.
- **X-ray Crystallography Facility:** XCF is composed of two racks designed to support crystal growth, harvesting, mounting, and x-ray diffraction data collection.

Appendix E
Assembly Sequence Rev. D

Date	Flight	Launch Vehicle	Elements
Nov 1998	1A/R	Russian Proton	• Control Module (Functional Cargo Block - FGB)
Dec 1998	2A	U.S. Orbiter STS-88	• Unity Node (1 Stowage Rack) • 2 Pressurized Mating Adapters attached to Unity
Apr 1999	1R	Russian Proton	• Service Module
May 1999	2A.1	U.S. Orbiter STS-96	• Spacehab Double Cargo Module
June 1999	3A	U.S. Orbiter STS-92	• Integrated Truss Structure (ITS) Z1 • PMA-3 • Ku-band Communications System • Control Moment Gyros (CMGs)
July 1999	2R	Russian Soyuz	• Soyuz
Aug 1999	4A	U.S. Orbiter STS-97	• Integrated Truss Structure P6 • Photovoltaic Module • Radiators
Oct 1999	5A	U.S. Orbiter STS-98	• U.S. Laboratory Module
Dec 1999	6A	U.S. Orbiter STS-99	• MPLM (U.S. Lab outfitting) • Ultra High Frequency (UHF) antenna • Space Station Remote Manipulating System (SSRMS)
Jan 2000	7A	U.S. Orbiter STS-100	• Joint Airlock • High Pressure Gas Assembly

Phase II Complete			
Date	**Flight**	**Launch Vehicle**	**Elements**
Mar 2000	4R	Russian Soyuz	• Docking Compartment Module-1 (DCM-1)
Mar 2000	7A.1	U.S. Orbiter STS-102	• MPLM
Apr 2000	UF-1	U.S. Orbiter STS-104	• MPLM • PV Module batteries • Spare Pallet (spares warehouse)
June 2000	8A	U.S. Orbiter STS105	• Central Truss Segment (ITS S0) • Mobile Transporter (MT)
Aug 2000	UF-2	U.S. Orbiter STS-106	• MPLM with payload racks • Mobile Base System (MBS)
Oct 2000	9A	U.S. Orbiter STS-108	• First Starboard truss segment (ITS S1) with radiators • Crew and Equipment Translation Aid (CETA) Cart A
Jan 2001	9A.1	U.S. Orbiter STS-109	• Russian provided Science Power Platform (SPP) with four solar arrays
Feb 2001	11A	U.S. Orbiter STS-110	• First port truss segment (ITS P1) • Crew and Equipment Translation Aid (CETA) Cart B
April 2001	3R	Russian Proton	• Universal Docking Module
May 2001	12A	U.S. Orbiter STS-111	• Second port truss segment (ITS P3/P4) • Solar array and batteries
May 2001	5R	Russian Soyuz	• Docking Compartment 2 (DC2)
June 2001	12A.1	U.S. Orbiter STS-112	• Third port truss segment (ITS P5) • Multi-Purpose Logistics Module (MPLM)
June 2001	13A	U.S. Orbiter STS-113	• Second starboard truss segment (ITS S3/S4) • Solar array set and batteries (Photovoltaic Module)
Sept 2001	10A	U.S. Orbiter STS-114	• Node 2

Date	Flight	Launch Vehicle	Elements
Oct 2001	1J/A	U.S. Orbiter STS_115	• Japanese Experiment Module Experiment Logistics Module (JEM ELM PS)
Jan 2002	1J	U.S. Orbiter STS_116	• Japanese Experiment Module (JEM) • Japanese Remote Manipulator System (JEM RMS)
Feb 2002	9R	Russian Proton	• Docking and Stowage Module (DSM)
Feb 2002	UF_3	U.S. Orbiter STS_117	• Multi_Purpose Logistics Module (MPLM) • Express Pallet
May 2002	UF_4	U.S. Orbiter STS_118	• Express Pallet • Spacelab Pallet carrying “Canada Hand” (Special Purpose Dexterous Manipulator • Alpha Magnetic Spectrometer
June 2002	2J/A	U.S. Orbiter STS_119	• Japanese Experiment Module Exposed Facility (JEM EF) • Solar Array Batteries
Aug 2002	14A	U.S. Orbiter STS_120	• Cupola • Science Power Platform (SPP) Solar Arrays • Service Module Micrometeroid and Orbital Debri Shields (SMMOD)
Aug 2002	8R	Russian Soyuz	• Research Module 1
Sept 2002	UF_5	U.S. Orbiter STS_121	• Multi_Purpose Logistics Module (MPLM) • Express Pallet
Oct 2002	20A	U.S. Orbiter STS_122	• Node 3
Nov 2002	10R	Russian Soyuz	• Research Module 2
Nov 2002	17A	U.S. Orbiter STS_123	• Multi_Purpose Logistics Module (MPLM) • U.S. Lab racks for Node 3
Feb 2003	1E	U.S. Orbiter STS_124	• European Laboratory _ Columbus Orbital Facility (COF)
Mar 2003	18A	U.S. Orbiter STS_125	• U.S. Crew Return Vehicle (CRV)

Date	Flight	Launch Vehicle	Elements
June 2003	19A	U.S. Orbiter STS-127	• Multi-Purpose Logistics Module (MPLM)
July 2003	15A	U.S. Orbiter STS-128	• Solar Arrays and Batteries (Photovoltaic Module S6)
Sep 2003	UF-6	U.S. Orbiter STS-129	• Multi-Purpose Logistics Module (MPLM) • Batteries
Nov 2003	UF-7	U.S. Orbiter STS-130	• Centrifuge Accommodations Module (CAM)
Jan 2004	16A	U.S. Orbiter STS-131	• U.S. Habitation Module
Note: Additional Progress, Soyuz, H-II Transfer Vehicle and Automated Transfer Vehicle flights for crew transport, logistics and resupply are not listed.			

Appendix F
Station Mission Controller Front Room Positions

Position	Console Name	Discipline	Representative Contact
FD	Flight Director	Flight Director	DA8/Andy Algate
CATO	Communication and Tracking Officer	Comm & Tracking	DF23/Mike Ranjbar
ODIN	Onboard Data and Information Network Officer	Comp & Data Handling	DF2/Ray Lachney
ECLS	Environmental Control and Life Support Systems Officer	Envir Cont & Life Supt	DF8/Ed Hamlin
PHALCON	Power, Heating, Articulation, Lighting and Control Officer	Elect Power System	DF7/Jeanne Lynch
ADCO	Attitude Determination and Control Officer	Motion Control Systems	DF6/Marc Passy
THOR	Thermal Operations and Resources Officer	Thermal Control System	DF8/Leena Joshi
ROSO	Robotics Operations System Officer	Robotics	DF44/Angela Prince
EVA/Station	EVA/Station	Extra Vehicular Activity	DF4/Randy McDaniel
OSO	Operations Support Officer	Maintenance, Struct and Mech	DF53/ Ted Kenny
OPS PLAN	Operations Planning Officer	Ops Planning	DO47/Howard Jones
ACO	Assembly, Activation & Checkout Officer	Assembly Ops	DO5/Jean Hensley
TOPO	Trajectory	Trajectory	DM34/E. Schultz
SURGEON	Flight Surgeon	Surgeon	SD2/R. Billica

F.1 Flight Director (FD)

The Mission Control Center Houston (MCC-H) Flight Director (FD) has overall authority and responsibility for the safety of the International Space Station (ISS) and crew, planning and plan execution, systems operations, and anomaly troubleshooting. The MCC-H FD leads the real-time execution and will receive status information from the various control centers on significant Station operations activities which are being conducted. The MCC-H FD approves the weekly integrated Station plan, and approves any real-time deviations to the plan. The MCC-H FD approves all MCC-H commands to the Station, and the initiation of any potentially hazardous operation. The MCC-H FD has the responsibility and authority to take any action required to ensure the safety of the crew and ISS. When decisions are required outside of the Station operating base, the MCC-H FD will consult the Mission Management Team when time permits.

F.2 ISS Communication and Tracking Officer (CATO)

The Communication And Tracking Officer (CATO) is responsible for management and operations of the U.S. Communications Systems onboard the ISS, management of command and telemetry services between the vehicle and the ground, and management of the operations recorder function, (i.e. the recording and playback of ISS core system telemetry). The U.S. Communications Systems include the S-band, Ku-band, UHF, Audio, Video hardware and associated system software. CATO is also responsible for maintaining cognizance of the operational status of the Russian Communications Systems.

F.3 ISS Onboard Data and Information Network (ODIN) Officer

The Onboard Data and Information Network (ODIN) Officer is the Station Command and Data Handling (C&DH) Systems Officers responsible for the U.S. Onboard Segment (USOS) Command and Data Handling System, including hardware, software, networks, and interfaces with International Partner (IP) Avionics Systems. ODIN manages USOS Multiplexer/Demultiplexer (MDMs) hardware, networks, core software and memory devices, crew interface devices, station mode control, station time and distribution, Caution and Warning system, station level Fault Detection, Isolation and Recovery (FDIR), Command and Telemetry Processing, and data interfaces with International Segments.

F.4 Environmental Control and Life Support (ECLSS) Officer

The Environmental Control and Life Support System(ECLSS) Officer is responsible for the assembly and operation of multiple station subsystems and functions related to atmosphere control and supply, atmosphere revitalization, cabin air temperature, humidity control, and circulation, fire detection and suppression, water collection and processing, crew hygiene, and payload utilities support. The ECLSS Officer performs systems management of the USOS ECLSS equipment. This includes activation and checkout during assembly in addition to nominal and off-nominal systems operation. The ECLSS Officer is also responsible for the overall integration of IP station functions including O2, N2, and H2O consumables management and balance; total atmosphere composition, revitalization, and conditioning; and emergency response (i.e. module leak, fire, toxic spill).

F.5 Power, Heating, Articulation, Lighting, and Control (PHALCON) Officer

The Power, Heating, Articulation, Lighting, and Control (PHALCON) Officer manages the power generation, energy storage, and power distribution capabilities of the Station Electrical Power System (EPS). The PHALCON Officer ensures that electrical systems configurations and power allocation meet the needs of the U.S. and IP core and payload systems, and is responsible

for the detailed long term planning, analysis, troubleshooting, anomaly resolution, and procedure execution in support of real-time operation of the U.S. EPS. The PHALCON Officer is responsible for providing periodic reports on the status of the multi-segment EPS to the Station Flight Director. PHALCON will also notify the Station Flight Director if any EPS anomalies occur or if deviations from the operating procedures occur. PHALCON will coordinate EPS procedures which effect multiple disciplines with the appropriate Flight Controllers in the MCCs.

The PHALCON Officer requires top level knowledge of the Russian Segment (RS) core systems to support the execution of the PHALCON responsibilities of station-wide health and status monitoring, and leadership of multi-segment responses to any electrical system malfunctions or procedure changes. In order to determine the station-wide status of the electrical power systems, the PHALCON Officer requires information regarding the Russian power generation, energy storage, and power distribution capabilities, including main bus status and detailed electrical systems information at the interfaces between the U.S. On-orbit Segment (USOS) and RS. The PHALCON Officer will coordinate multi-segment EPS operations with the Russian EPS Officer. During missions in which the Assembly Power Converter Unit (APCU) is operated, the PHALCON Officer will be required to coordinate joint vehicle electrical systems operations with the Shuttle Electrical Generation and Integrated Loading (EGIL) Officer.

F.6 ISS Attitude Determination and Control (ADCO) Officer

The Station Attitude Determination and Control (ADCO) Officer works in partnership with the Russian controllers to manage the station’s Motion Control System (MCS). System responsibilities include the USOS Guidance, Navigation and Control (GN&C), RS GN&C, and RS propulsion systems. ADCO is responsible for integrated GN&C and propulsion systems operations. The ADCO will directly operate the USOS GN&C system; with Mission Control Center Moscow (MCC-M) operation the RS systems. Both groups will participate in the planning , analysis, and monitoring of station Motion Control System (MCS).

F.7 Thermal Operations and Resources (THOR) Officer

Thermal Operations and Resources (THOR) Officer is a combined managerial and technical position responsible for the overall operations of the Thermal Control System (TCS). The TCS is comprised of the External TCS (ETCS) and radiators (12A and subs), the Early External TCS (EETCS) and radiators (5A - 12A), the Internal TCS (ITCS), and Passive TCS (PTCS). The operational responsibilities of the THOR include TCS performance monitoring, management of the heat rejection resource, planning and replanning support, and anomaly resolution. With respect to NASDA and ESA, THOR is responsible for operations of the ETCS, which interfaces with the Japanese Experiment Module (JEM) and Columbus Orbiting Facility COF ITCS loops via four interface heat exchangers (two per module). NASDA and ESA will be responsible for operation of the ITCS in their respective modules, and for maintaining their modules' heat loads within predefined allocations. THOR will be responsible for heaters located on the Interface Heat Exchanger (IFHXs) and external water lines prior to JEM/COF activation, and NASDA/ESA will assume control of those heaters after module activation.. Additionally, THOR

will monitor the JEM/COF ITCS to maintain an overview-level insight into the operation of their systems. With respect to RSA, there are no functional interfaces between the US and Russian active TCS. THOR will be responsible for operation of the U.S. TCS, while MCC-M will be responsible for the Russian TCS. However, THOR will monitor the Russian TCS to maintain an overview-level insight into the operation of their systems. MCC-M will likewise monitor the U.S. TCS to maintain a similar insight.

F.8 Robotics Operations System (ROSO) Officer

The Robotics Operations System Officer (ROSO) is a combined managerial and technical position that is responsible for the overall operations of the Mobile Servicing System (MSS). The MSS is comprised of the Mobile Transporter (MT), Mobile Remote Servicer Bace System (MBS), Space Station Remote Manipulating System (SSRMS), Special Purpose Dexterous Manipulator (SPDM), Robotics Workstation (RWS), and Artificial Vision Unit (AVU). The operational responsibilities of the ROSO include MSS performance monitoring, planning/replanning support, and anomaly resolution. ROSO will be located in the Flight Control Room (FCR), and, along with other FCR personnel, will support the space station Flight Director (FD). ROSOs primary responsibility is communication with the FD regarding the status of the robotics systems. If any anomalies have occurred or are anticipated, the ROSO must inform the FD. The ROSO is also responsible for ensuring that the crew is accurately following operating procedures and for notifying the FD if a deviation occurs. In addition, if any robotics systems activities may affect or be affected by other space station systems, ROSO must notify those systems' MCC mission controllers.

ROSO's responsibilities involve management of a joint NASA/CSA team of specialists to plan and execute integrated robotic procedures in support of assembly, utilization, and maintenance of the space station. ROSO will coordinate the team activities, assign priorities, and maintain a productive environment.

F.9 Extravehicular Activity (EVA) Officer

The Extravehicular Activity (EVA) Officer is the mission controller responsible for the conduct of EVA-related tasks. The EVA Officer combines technical EVA expertise with skills to manage the activities of the EVA flight control team and its resources. During planning shifts, this involves maintaining overall mission cognizance and awareness of how EVA-related activities fit into the flight plan. During execution of an EVA, this requires constant awareness of the EVA tasks being performed (including EVA customer interfacing), as well as Extravehicular Mobile Unit (EMU) performance.

The EVA Officer acts as the interface for EVA requirements with all other disciplines in the MCC. Meaning, if EVA will be affected by activities from another discipline, or vice versa, the EVA Officer must coordinate these activities. This entails one of the FCR position's primary responsibilities, which is to keep the Flight Director abreast of any significant EVA developments. Real-time downlink communications are critical for EVA Officers to perform their jobs. There are only two possible ways of following an EVAs progress, either hearing the

EV crew's commentary or watching downlinked video. Without at least one of these two forms of "telemetry", the EVA team is blind regarding the status of EVA tasks. The only exception to this fact is the highly unusual circumstance of an EVA payload rigged with its own status telemetry.

F.10 Operations Support Officer (OSO)

The Operations Support Officer (OSO) is the flight controller responsible within the control team for the station structures, mechanical systems, and systems maintenance. The OSO is responsible for all aspects of monitoring, planning/replanning, and anomaly resolution for the structures and mechanical systems as well as other equipment used for maintenance such as hand tools, diagnostic equipment and repair kits. The OSO is also responsible for implementing the procedures for Intravehicular Activity (IVA) maintenance tasks as well as other hardware assembly operations (such as vestibule jumper installation removal and rack translation). They also have the role within the control team for planning and coordinating the prioritization of all systems maintenance tasks, keeping the flight director and others aware of the status of repairs, and ensuring the proper spare parts, supplies, and equipment are available on-board or on the ground.

F.11 Operations Planner (Ops Plan) Officer

The Operations Planner (Ops Plan) Officer coordinates operations planning and execution with the mission control team, payload community, and the International Partners. Additionally, the Ops Plan supervises operations planning backroom and office support in accomplishing mission control activities relating to Short Term Plan (STP) and Onboard Short Term Plan (OSTP) development (weekly planning), replanning, inventory and stowage management, systems operations data file management, payload support, and management of onboard Portable Computers. The Ops Plan also plays a leadership role in the evolution of the operations plan from tactical/increment planning, through mission execution, to post increment reporting and leads the international execute planning effort and associated Boards.

F.12 Assembly, Activation & Checkout Officer (ACO)

The Assembly, Activation & Checkout Officer coordinates the execution of assembly and activation operations across the Flight Control Team (FCT). ACO develops and coordinates changes to the assembly and activation Flight Data File/Operations Data File (FDF/ODF) procedures as required to accomplish required operations and provides recommendation to FD and Flight Control Team (FCT) on changes to execution of assembly and activation operations due to ISS or Space Transportation System (STS) system failures. Additionally, ACO identifies off-nominal conditions which affect assembly or joint vehicle operations and recommends recovery options to the FCT.

F.13 Trajectory Operations (TOPO) Officer

Trajectory Operations Officer (TOPO) performs specific trajectory operations functions and integrates all planned activities or events which affect the ISS trajectory, propulsive and non-propulsive. Trajectory simulations are used to evaluate both near and long term results to support go/no go decisions. TOPO provides the baseline ISS planning ephemeris and associated ancillary data in support of the Short Term Plan development and execution. Trajectory determaintain is initially performed by Russia until provided directly by the ISS Global Positioning System (GPS). U.S. Space Command (USSPACECOM) is back-up in both cases. TOPO performs accuracy checks of the ISS state vector as required. Additional ephemerides are maintained as required for the sun, planets, moon, Tracking and Data Relay System (TDRS), and other orbiting vehicles. In support of translational maneuvers, TOPO develops the maneuver requirements, coordinates with Russia in development of maneuver designs, and works with Operations Planner to integrate the detail maneuver design from Russia into the activity timelines. These maneuvers include nominal reboost and debris avoidance. Translational maneuver monitoring and post-maneuver performance assessments are also performed. The scope of debris avoidance includes the ISS itself, pre-launch clearance of vehicles coming to the ISS, and visiting vehicles while in flight to the ISS. Launch clearances and requirements for debris avoidance maneuvers are evaluated with USSPACECOM. ISS maneuvers are jointly planned with Russia. Visiting vehicles actions are jointly coordinated with the vehicle owners. TOPO supports activation and checkout activities, and rendezvous operations as required.

F.14 Flight Surgeon (SURGEON)

The MCC-H Flight Surgeon (Surgeon) is responsible for the health and safety of the crew on-board the ISS. The Surgeon provides real-time medical consultations and communications to flight crewmembers, including Private Medical Conferences, Private Family Conferences, and Private Psychological Conferences, which are completed by the Psychological Support Group. The Surgeon also monitors the medical and physiological status of the flight crewmembers, medically-related ISS systems, payloads, medical research, and the Crew Health Care System equipment. The Surgeon represents Medical Operations as a member of the Management Control Team, provides inputs to the Flight Director on all medical issues, and provides mission integration plan inputs regarding crewmember health and safety. A physician, who is certified as a NASA Flight Surgeon, will staff the MCC-H Surgeon position. The Surgeon may consult specialty controllers and consultants (medical consultants, radiation experts, microbiologists, and toxicologists) to aid in the resolution of medical issues.