Space Flight Operations Contract

Final Report on the 3-Month Alternate Access to Station (AAS) Performance Requirements Study

International Space Station

February 28, 2002

United Space Alliance

PREFACE

This Final Report on the 3-Month Alternate Access To Station (AAS) Performance Requirements Study was prepared for the Marshall Space Flight Center (MSFC) AAS Office by United Space Alliance (USA) as part of the Space Flight Operations Contract (SFOC) NAS-20000, WBS 1.7.9.4, Systems Integration and Analysis, Task No. 6, provisioning work for FY02.

The specific work content associated with this effort was defined in the Scope of Work partnered between the MSFC AAS Office and USA, and further defined between USA and subcontractor resources, Booz Allen & Hamilton, Inc. and Space America, Inc.

The primary responsibility for this document is with the USA International Space Station (ISS) Program Integration Department.

Questions regarding the technical content of this document should be directed to Ronald D. Pechacek, United Space Alliance, 1150 Gemini Ave., Houston TX, 77058, (281) 280-6948.

CONTENTS

Section		Page
1.0	**INTRODUCTION**	**1-1**
2.0	**PARTICIPANTS**	**2-1**
3.0	**PROCESS**	**3-1**
4.0	**BASELINE CONCEPT REQUIREMENTS**	**4-1**
5.0	**CARGO MATRIX**	**5-1**
5.1	DATA SOURCE	5-1
5.2	DEFINITIONS	5-1
5.3	CARGO DESCRIPTION	5-3
5.3.1	External Cargo	5-4
5.3.2	Internal Cargo	5-4
6.0	**GROUND PROCESSING**	**6-1**
6.1	LAUNCH PROCESSING	6-1
6.2	RETURN PROCESSING	6-3
6.3	KSC CONSIDERATIONS	6-3
6.4	CARGO TRANSFER AND GROUND HANDLING REFERENCE REQUIREMENTS	6-4
7.0	**TRAFFIC MODEL**	**7-1**
7.1	AAS STUDY BASELINE DERIVED FROM DAC 8 (TM 1)	7-2
7.2	MINIMUM CARGO CASE (TM 2)	7-2
7.3	MAXIMUM CARGO CASE (TM 3)	7-2
7.4	NOMINAL CASE WITH MIXED CARGO (TM 4)	7-2
7.5	NOMINAL CASE WITH INTERNAL CARGO (TM 5)	7-3
7.6	NOMINAL CASE WITH ALL EXTERNAL CARGO (TM 6)	7-3
7.7	NOMINAL CASE WITH DECREASED PROGRESS FLIGHTS (TM 7)	7-3
7.8	NOMINAL CASE WITH INCREASED UTILIZATION (TM 8)	7-3
7.9	THREE CREW ISS CORE CASE WITH IP VEHICLES	7-4
7.10	THREE CREW ISS CORE CASE WITHOUT IP VEHICLES	7-4
7.11	SIX CREW ISS CASE WITH IP VEHICLES	7-4
7.12	SIX CREW ISS CASE WITHOUT IP VEHICLES	7-4
8.0	**DESIGN REFERENCE MISSIONS**	**8-1**
8.1	DRM PARAMETER	8-1
8.1.1	DRM ID	8-1
8.1.2	Description	8-1
8.1.3	Cargo Type	8-1

Section **Page**

8.1.4 Cargo Hazards 8-1
8.1.5 Carrier Type..... 8-2
8.1.6 Total Mass (Cargo and Accommodations) 8-2
8.1.7 Total Volume (Cargo and Accommodations)..... 8-4
8.1.8 ISS Transfer Method 8-4
8.1.9 ISS Attach Period 8-4
8.1.10 Cargo Support Requirements..... 8-5
8.1.10.1 Power/Cooling 8-5
8.1.10.2 Data..... 8-5
8.1.10.3 Late/Early Access..... 8-5
8.1.11 Cargo Qualification Limits..... 8-6
8.1.11.1 Internal Cargo..... 8-6
8.1.11.2 External Cargo..... 8-7
8.1.12 Available at transfer location 8-10
8.1.13 Cargo manifest defined 8-10
8.1.14 Cargo Transfer Location..... 8-10
8.1.15 Cargo Return Location 8-10
8.1.16 Flights per Period 8-10
8.2 SUMMARY OF DRMS..... 8-10
8.2.1 AAS 1 - Logistics Skip Cycle Support, Pressurized Cargo Vehicle 8-12
8.2.2 AAS 2 – Maximum Annual Cargo, Mixed Cargo Vehicle..... 8-13
8.2.3 AAS 3 – Minimum Annual Cargo, Mixed Cargo Vehicle..... 8-13
8.2.4 AAS 4 – Nominal Annual Cargo, Mixed Cargo Vehicle 8-13
8.2.5 AAS 5 – Nominal Annual Cargo, Pressurized Cargo Vehicle..... 8-13
8.2.6 AAS 6 – Nominal Annual Cargo, Mixed Fleet of Pressurized and Unpressurized Vehicles 8-14
8.2.7 AAS 7 – Nominal Descent Recoverable Cargo, Pressurized Cargo Vehicle 8-14
8.3 DRMS EXCLUDED FROM THE PERFORMANCE REQUIREMENTS DOCUMENT 8-14
8.3.1 Rapid Response..... 8-15
8.3.2 Passive Cargo, Maximum Annual Cargo, Mixed Cargo Vehicle 8-16
8.3.3 Passive Cargo, Minimum Annual Cargo, Mixed Cargo Vehicle 8-16
8.3.4 Nominal Annual Cargo, Unpressurized Cargo Vehicle..... 8-17
8.3.5 Increased Utilization, Mixed Cargo Vehicle 8-17
8.3.6 Nominal Descent Nonrecoverable Cargo, Mixed Cargo Vehicle 8-17

9.0 OTHER REQUIREMENTS AND LIMITATIONS..... 9-1
9.1 COORDINATE SYSTEM 9-1
9.2 MATING LOCATIONS 9-1

Section **Page**

9.2.1 Common Berthing Mechanism Berthing Requirements 9-2
9.2.2 Androgynous Peripheral Attachment System Docking Requirements 9-4
9.2.3 Power Data Grapple Fixture 9-4
9.2.4 Payload Attach Site (PAS) and Unpressurized Logistics Carrier Attach System (ULCAS) 9-5
9.2.5 Element Trunnions..... 9-6
9.3 CARGO RESTRAINTS 9-8
9.3.1 Internal Cargo Restraints 9-8
9.3.1.1 Passive Cargo..... 9-8
9.3.1.2 Active Cargo 9-11
9.3.2 External Cargo Restraints 9-12
9.4 CARGO ACCESS 9-12
9.4.1 Internal Cargo Access..... 9-12
9.4.2 External Cargo Access 9-13
9.5 SAFETY 9-16

10.0 OBSERVATIONS..... 10-1

Appendix

A ACRONYMS..... A-1

B ISS LOGISTICS SUPPORT DEFINITION STATEMENT OF WORK..... B-1

C RESERVED..... C-1

D RESERVED..... D-1

E DEFINITIONS..... E-1

F REFERENCE DOCUMENTS F-1

G CARGO MATRIX G-1

H TRAFFIC MODEL RESULTS..... H-1

I SPACE STATION BODY COORDINATE SYSTEM..... I-1

J ORBITER COORDINATE SYSTEM..... J-1

K AAS VEHICLE PERFORMANCE REQUIREMENTS DOCUMENT K-1

L AAS VEHICLE PERFORMANCE REQUIREMENTS TRACEABILITY MATRIX..... L-1

Appendix **Page**

M RESPONSE PERIOD LOGIC PATH M-1

N UNITED SPACE ALLIANCE STATUS REVIEW CHARTS N-1

O ACTION ITEM LOG O-1

TABLES

Table

8-1 External cargo FSE to cargo mass ratios 8-3
8-2 Shuttle carrier internal cargo load limits 8-6
8-3 Internal cargo thermal limits 8-6
8-4 Standard category external cargo attributes 8-9
8-5 Non-standard category external cargo attributes 8-9
8-6 AAS DRM matrix included in the PRD 8-11
8-7 Estimated shuttle cryo/energy margin 8-12
8-8 AAS DRMs excluded from the PRD 8-15

FIGURES

Figure

3-1 AAS Performance Requirements Study process flow 3-1

4-1 Exploded view of the International Space Station 4-5

6-1 Typical cargo transfer flow 6-4

8-1 Rapid response logic tree 8-16

9-1 Node 1 Port and TCS radiator clearance (using MPLM) 9-3
9-2 Power Data Grapple Fixture 9-5
9-3 Active and passive PAS/ULCAS assemblies 9-6
9-4 PAS operational envelope (dimension in inches) 9-6
9-5 Active and passive EUTAS 9-7
9-6 Element trunnion locations (circled) 9-8
9-7 Cargo transfer bags 9-10
9-8 M-bags 9-11
9-9 Standard Middeck modular locker 9-12
9-10 Active FRAM and passive FRAM assemblies 9-14
9-11 Small adapter plate stay-out zone drawing with horizontal mounted handrails 9-16

1.0 INTRODUCTION

United Space Alliance (USA) produced the Alternate Access To Station (AAS) Performance Requirements Document (PRD), USA004882, to support development of concept studies for the AAS. The PRD identifies the basic functional performance requirements that an AAS System would be expected to satisfy to perform logistics resupply for the orbiting International Space Station (ISS). Although the PRD cannot serve as the detailed design specification or as the final and specific criteria for a services contract, it identifies (either specifically or through reference) many of the significant criteria that a service developer must consider when establishing an initial system design and operations concept to maximize its usefulness and easy integration with the International Space Station Program (ISSP).

USA performed a 3-month study to develop the PRD. The intent was to minimize creation of new criteria and focus on gathering and analyzing existing data and requirements. This had two purposes. The first was to control the budget and schedule. The second was to maximize compatibility with the existing ISS program and to improve potential future utilization of such a system. This study focused on the operational requirements for the AAS. It did not address the program management interfaces or financial considerations.

The study concentrated on development of performance requirements. The general approach taken was to identify the significant information that a service provider would require if the ISS were to query the space transportation industry to “buy a ride” for delivery of cargo to the ISS. Where possible, specific design criteria and point solutions were avoided. In fact, a range of criteria and options were provided where possible (consistent with schedule and budget constraints).

During the study, it was recognized that in addition to the PRD, a document was needed to provide the Marshall Space Flight Center (MSFC) AAS Office with a historical archive to aid in the overall understanding of the process and requirements developed. This document serves to compile the data, analyses, requirements, and associated rationale used to develop the basic functional performance requirements. To this purpose, this report is generally structured around the final PRD contents.

This report is not intended to rigorously detail every decision or discussion, but instead, to provide adequate background so that as the AAS and ISS programs mature, the elements of the PRD may be readdressed without starting anew. Much of this information is included in the appendices and the reader is encouraged to review them as carefully as the body of this report.

2.0 PARTICIPANTS

In developing the resource requirements to complete this study, USA identified the need to fully use as many resources as possible and capitalize on the diversity available from that resource base. To that end, USA made use of both internal (USA employees) and external (subcontractor) resources. These resources were chosen because of their expertise in specific areas that were deemed to have significant insight into ISS Payloads, logistics, and traffic requirements. The following represents those individuals and organizations that contributed to this effort:

Organization	Functional Area	Team Member
USA	ISS Program Integration	Ron Pechacek
	Vehicle Integrated Performance and Resources (VIPeR)	Les Sorge
	Vehicle Integrated Performance and Resources (VIPeR)	Rob Alexander
	ISS Logistics & Maintenance	Andy Evans
	ISS Logistics & Maintenance	Derek Dumas
	ISS Payloads	John Selmarten
	ISS Payloads	Kristen Rodda
	Program Integration	Alan DeLuna
	Program Integration	Jim Collins
	MOD/Transfer Ops	Bryan Janda
	MOD/Visiting Vehicle	Paul Lane
	External Carriers	Joel Sills
	USA Payloads/KSC	Erick Isely
	USA/External Carriers	Randy Kassu
	Cargo Compatibility Analysis	Rodney Nabizadeh
Booz Allen & Hamilton, Inc	Traffic Model	Steve Wright
	Traffic Model	Gary Brown
Space America, Inc.	ISS Payloads	Chris Barker

3.0 PROCESS

A developer of a logistics supply service requires certain cargo information to build an operations and design concept. This includes how much (mass), how often (rate), how big (volume and configuration), and how to handle (constraints). A process was implemented to develop this information for representative cargos in the ISS steady state operations phase. See Figure 3-1 below.

The representative cargos are projections of need at least four years in the future. Current uncertainties with final configuration, manning, and schedule for the ISS, along with the continuing development of an operational data base and lessons learned make this data valid as of this snapshot in time. It is appropriate for conceptual studies but will require review and refinement for the next level of service development. This data is also limited in detail providing appropriate information for concept work but inadequate information for detailed design.

The first step in this process was to create a set of operational assumptions. These assumptions were refined during the study and became the basic concept requirements found in the PRD. Although many of these are duplicative of existing requirements found in documents, such as the Visiting Vehicle Interface Definition Document (VVIDD), they are necessary to reiterate because they provide the foundation upon which the rest of the requirements are based. Non-compliance with these may have a ripple effect causing the rest of the requirements to be invalid.

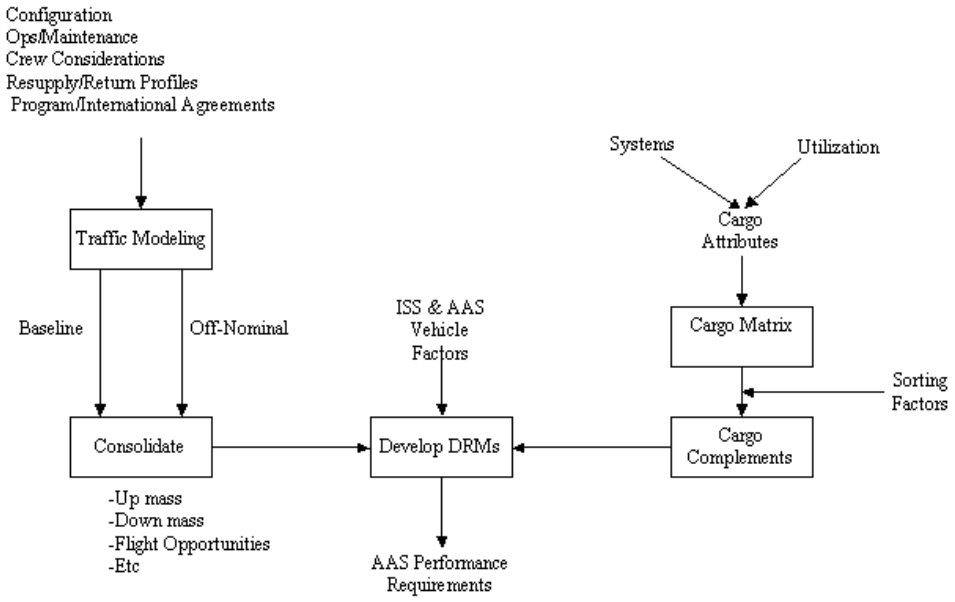

Figure 3-1. AAS Performance Requirements Study process flow

The basic ISS operational requirements (configuration, maintenance plans, crew considerations, and Program and Payload International Partner (IP) agreements) allowed development of projected usage rates for payloads, supplies, and materials.

This allowed development of the traffic models described in Section 7.0 and the cargo matrix described in Section 5.0 along with additional operational requirements and constraints. The traffic model allowed development of upmass, downmass, and flight rates. The cargo matrix was used to identify cargo types, volumes, and restrictions, such as acceleration limits. This cargo data was then grouped and analyzed to create representative cargo complements for the AAS. Finally, the traffic model data and cargo complement data were merged to create Design Reference Missions (DRMs) for the AAS. The DRMs give developers options as to the type of service provided ISS, dependant upon AAS lift capacity, orbital element concept, system capacity, etc.

4.0 BASELINE CONCEPT REQUIREMENTS

The following assumptions and reference requirements were used in the course of this 3-month study to establish the necessary baseline for traffic modeling and cargo complement assessments required to develop an AAS system concept and to provide assurance that the concept would be compatible with the existing ISS design, operations, and utilization concepts.

It was determined that these assumptions should be forwarded to the service providers as baseline concept requirements. Although many of these requirements duplicate those found in other reference documents, they can represent major cost and operational drivers and should be highlighted early on. This will ensure that service providers consider these items.

4.1 The AAS orbital transfer element will be an unmanned orbital element.

Rationale: Experience has already proven that manned orbiting workshops (e.g., MIR and ISS) can be readily served by unmanned logistics supply vehicles. A manned element would require a considerably higher level of additional resource and planning/integration demands upon the ISS Program and the ASS service provider.

4.2 The AAS system will support the ISS altitude profile from 278 to 460 km (150 to 248 n. mi.) at an inclination of 51.6 degrees.

Rationale: These are the orbital parameters at which the ISS operates, and any ISS resupply vehicle must be able to reach the ISS within this envelope.

4.3 The AAS system will not require changes to the ISS that adversely affect ISS performance or capabilities, or that adversely impact other vehicles that interface with the ISS.

Rationale: The ISS is a complex, internationally owned infrastructure with numerous operational commitments that must be met. Degradation in its capabilities, including ability to resupply via International Partner vehicles cannot be allowed.

4.4 The AAS service provider is responsible for the purchase and integration of hardware to their vehicle to be compatible with the ISS (e.g., Common Berthing Mechanism (CBM), Flight Releasable Grapple Fixture (FRGF), Power Data Grapple Fixture (PDGF), passive Flight Releasable Attachment Mechanism (FRAM), etc.)

Rationale: Placing the requirement to account for the integration hardware on the service provider ensures that all costs are considered in the studies.

4.5 The AAS orbital transfer element will be required to perform all maneuvers necessary to berth/dock to the on-orbit ISS at the attitudes defined in SSP 50261-01, Generic Groundrules, Requirements, and Constraints.

Rationale: The ISS has been designed to fly in certain specific attitudes. Certification of any new attitudes would require extensive thermal analysis. Maneuvering to a new attitude might use a significant amount of ISS propellant, and could cause thermal conditions that would be detrimental to ISS systems and utilization. The ISS Program would best be served by an AAS vehicle that docks to the ISS in its accepted attitudes.

4.6 The AAS element will not provide ISS propellant delivery services.

Rationale: Fuel for ISS use can only be delivered through a Russian docking mechanism. As this study focused on United States On-orbit Segment (USOS) mating locations, and since current ISS traffic modeling indicates adequate propellant margins with the existing fleet resources, propellant delivery was not considered a requirement for the AAS vehicle.

4.7 The AAS orbital transfer element will not provide attitude control or ISS reboost while attached to the ISS.

Rationale: Attitude control capability requires the correspondent hardware and software capability on both the AAS spacecraft and the ISS, which will add cost and complexity to both vehicles. It will also require additional propellant resources, which will detract from the cargo carrying capability of the craft. Therefore, an AAS vehicle that does not provide attitude control will best serve the ISS Program.

4.8 The AAS orbital transfer element will have a space-to-space communication system that is compatible with the ISS for the purpose of relaying command and data telemetry.

Rationale: All visiting vehicles to the ISS need to have communication with the ISS crew and ground control to execute critical commands such as collision avoidance maneuvers, termination of approach, etc., as well as the capability to send and receive nominal commands, such as propulsion inhibits upon mating, etc.

4.9 The AAS orbital transfer element will have the ability to receive Guidance, Navigation and Control (GN&C) system commands from the ISS while in proximity operations.

Rationale: All visiting vehicles to the ISS need to have the ability to be controlled by the ISS crew and ground control to execute critical commands, such as collision avoidance maneuvers, termination of approach, etc.

4.10 External cargo transfers between AAS orbital transfer element and the ISS will be performed via Extravehicular Robotics (EVRs), not by Extravehicular Activity (EVA).

Rationale: EVAs require a high level of risk and ISS resources to conduct. Visiting vehicle designs should allow the transfer of internal cargo through a docking hatch and the transfer of external cargo through the use of EVR.

4.11 The ISS can provide resources to the AAS vehicle, depending on the attach location, while the vehicle is attached to the ISS. These resources include electrical power, temperature and humidity control, Command and Data Handling (C&DH), and thermal cooling fluids. However, the specific allocation of resources will need to be negotiated with the ISS Program and shall not be in excess of those available at a specific interface.

Rationale: The ISS provides keep-alive power to all current Visiting Vehicles while they are docked to ISS. In addition, every docked vehicle is given a C&DH system interface through which critical commands and basic telemetry can be sent via the ISS. The amount of power and C&DH capability provided, along with any levels of other resources, are to be determined through discussions between the ISS Program and the AAS provider during the design phase.

4.12 The AAS service provider will be responsible for providing the launch and landing sites for the vehicle and for providing the necessary facilities for cargo integration and cargo de-integration of the vehicle that meet cargo ground handling and environmental requirements. The AAS service provider will also be responsible for providing cargo processing facilities at the launch and landing sites for late and early access hardware.

Rationale: The selection of a vehicle launch site requires the consideration of multiple engineering, financial, political, geographical, and legal factors that are unique for each vehicle situation. The vehicle provider has the best outlook on which an existing or planned launch site will best meet individual needs. The current ISS visiting vehicle fleet uses no less than four unique launch sites throughout the world, thus demonstrating that launching to an ISS rendezvous trajectory is possible from many points on the earth.

4.13 In the operational phase, the ISS Program will determine the dates for AAS attached operations and time constraints for return cargo.

Rationale: The AAS vehicle shall be designed to meet the needs and schedule of the ISS. The ISS Program will make the determination as to the times of the cargo delivery to the ISS. The AAS vehicle design shall be robust enough to work within ISS scheduling constraints.

4.14 The AAS must be capable of delivering cargo to the ISS on any date defined by the ISS Program. It will be available year round.

Rationale: The ISS requires the use of several cargo vehicles and undergoes several periods throughout the year in which it remains quiescent for microgravity payload operations. These factors result in a limited amount of available days for AAS launch, and the AAS vehicle must be available on any given day to best serve the ISS program.

4.15 Other than nominal approach and departure trajectories, the AAS vehicle will not perform formation flight with the ISS.

Rationale: The ISS Program is opposed to formation flying in principle due to the operational complexity of orchestrating and integrating joint maneuver plans for the ISS and the Visiting Vehicles (VV). Any VV interference with ISS operations, outside of docking and cargo transfer, should be minimized.

4.16 The post assembly complete configuration of the ISS will reflect the Assembly Sequence, Revision F, Baseline with the exclusion of the Propulsion Module. See Figure 4-1. The elements included are listed below:

All truss elements

Columbus Operating Facility (COF)

Japanese Experiment Module (JEM)

Centrifuge Accommodation Module (CAM)

Node 3

Crew Return Vehicle (CRV)

Hab Module

Russian Segment with Science Power Platform (SPP)

Rationale: This list represents the ISS configuration that is currently baselined, and is the configuration for which the ISS Program has committed system design and planning.

Additional detailed requirements are defined in subsequent sections of this document.

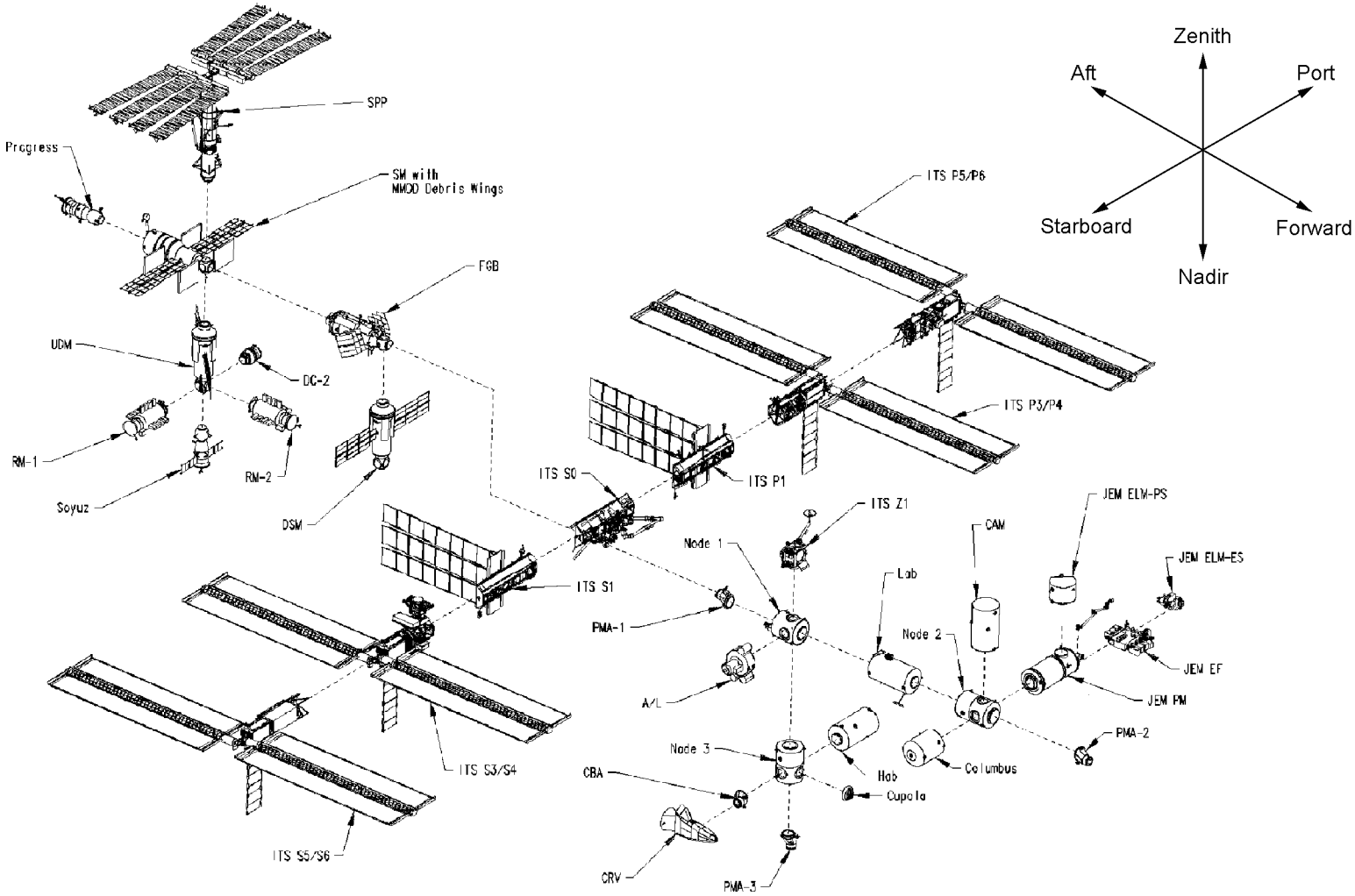

Figure 4-1. Exploded view of the International Space Station

5.0 CARGO MATRIX

5.1 DATA SOURCE

Items identified in the Cargo Matrix as Systems Maintenance are derived from an ISS modelling data set containing all Orbital Replacement Units (ORUs) on-orbit at Assembly Complete. Each ORU listed has a predicted life expectancy that drives time and cost estimates for depot maintenance and Resupply necessary for a fully operational Station.

All remaining items identified in the Cargo Matrix , such as Utilization, Systems Resupply and Russian Systems Maintenance, are derived from what has flown to orbit prior to 2002. These are representative cargo items that will continue to be flown post Assembly Complete.

Generally, all items listed in the cargo matrix are sourced from best available data as of the end of 2001. It is a projected list of hardware items that is based on crew consumption and usage, historical accounts of Utilization experiments and ORUs with predicted failure rates. As the predicted failure and usage rates are compared to collected data, some data within the matrix may become invalid. However, the overall list should remain representative of the final configuration. A substantial deviation from the list is highly unlikely.

The complete cargo matrix developed as part of this study can be found in Appendix G.

5.2 DEFINITIONS

a. Name: Cargo item name

b. Major Type – Cargo Group:

- Assembly – Hardware items specific to ISS final assembly configuration.
- Systems – Hardware items related to operations and logistics/maintenance requirements of the ISS
- Utilization – Hardware items specific to the conduct of scientific studies. Items are a variety of stand alone items or items that aid in the conduct of experiments such as refrigerator/freezers and incubation chambers.

c. Minor Type – Cargo Subgroup:

- Maintenance – Hardware Items specific to the maintenance of systems on-orbit.
- Resupply – Consumable type items such as food, clothes, hygiene hardware that is used to support the on-orbit crew

- Crew Health Care System (CheCS) – Hardware Items specific to the medical condition of crewmembers. Includes exercise equipment, medical monitoring and first-aid

- Ancillary Hardware – Non-critical hardware. Some photo and imagery hardware may fall within this category

d. Total Mass: Total cargo mass (lbs/kg), not including accommodations. The total mass with accommodations will be calculated for inclusion in the DRMs

e. Total Volume: Total cargo volume (ft^3/m^3) not including accommodations. Total volume with accommodations will be calculated for inclusion in the DRMs

f. Length/Width/Height: Cargo dimensions (inches) for external or large internal items that require direct mounting to vehicle. For internal cargo, if a bag size is provided, then these dimensions can be ignored, as the cargo item will be delivered to the AAS service provider within a cargo bag for delivery.

g. Bag Size: ISS standard cargo accommodations for internal cargo including Cargo Transfer Bags (CTB) (1 CTB Equivalent (CTBE) = 1.86 ft^3/.053 m^3) and M-bags. If a bag size is provided, then the dimensions can be ignored because as the cargo item will be delivered to the AAS service provider within a cargo bag for delivery.

h. Subcarrier/FSE: Defines the type of subcarrier or Flight Support Equipment (FSE) required for the cargo. FRAMs are required for cargo launched externally; Bag, Middeck Locker Equivalent (MLE), or CTB are required for internal cargo.

i. Preferred Launch Location: Suggested location of cargo for launch, either internal or external. This category was included because it is preferable to deliver some external cargo items internally due to size or cost of external FSE.

j. On-Orbit Location: Installed location of hardware on-orbit, either internal or external.

k. ISS Transfer Restrictions: The maximum hatch size that the cargo item will fit through (i.e., Androgynous Peripheral Attachment System (APAS), CBM, Russian port, Joint Airlock, Russian Airlock). This category was originally included to determine the relative advantage of docking to a CBM versus the APAS. However, only a few cargo items were too large to fit through the APAS. Therefore, this column was not filled out.

l. Resources Required: Defines whether the cargo item is active and, therefore, requires resources such as power, cooling, or data.

m. Environmental Constraints - Prelaunch, Pad, Ascent/Pre-transfer, Descent, Post-landing: Defines whether the cargo item requires support during different phases of the operation. This may include thermal limits, cleanliness, electrical grounding, power, cooling, data, etc.

n. Ascent/Return Qualification Limits: This category was originally included to list the cargo qualification limits for individual cargo items. However, due to the short duration of the study and the significant time impact to obtain the data, this category was left blank. In its place, the current shuttle carrier (MPLM, Middeck, Spacehab) data was included as part of the DRMs.

o. Hazard Type: Defines the potential cargo hazards associated with each cargo item, such as stored energy, batteries, biological, chemical, radioactive, fragiles, etc. However, due to the short duration of the study and the significant time impact to obtain the data, this category was left blank. In its place, representative cargo hazards were included as part of the DRMs.

p. Criticality Level: Criticality level for mission success for individual cargo items as defined in SSP 30223, Problem Reporting and Corrective Action (PRACA) for the ISS.

q. Response Period: Time required to prep cargo before turning over to launch service provider. This category was left blank in the cargo matrix and was included as part of the DRM for the total cargo complement to be delivered by the AAS service provider.

r. Transfer Location: The location where cargo will be turned over to AAS program. This category was also included as part of the DRM and defined as only KSC to simplify the operational concepts for the transportation of the cargo.

5.3 CARGO DESCRIPTION

As described above, the cargo matrix provides an extensive database of known ISS cargo items. Based on a review of this data and information from previous ISS flight experience, the cargo may be further categorized as defined below.

The AAS vehicle will be responsible for carrying a variety of cargo to the ISS. The cargo can be both internal and external and can consist of the following types:

a. Systems

- Spares/ORU for planned maintenance or for replacement of failed units and systems, supplies, tools, and support equipment
- Consumables and flight crew equipment, including life support consumables and equipment
- Water, both potable and technical grades
- Oxygen and nitrogen (gaseous)

b. Utilization (Payloads)

- Experiment hardware and supplies
- Experiment products

Internal and external AAS cargo complements are discussed below.

5.3.1 External Cargo

Ninety percent of the external cargo is system ORUs made up of approximately 180 types of ORUs and ancillary equipment. Of these ORUs, 65 percent fit into a volume of 36 in. by 47 in. by 25 in., which is the footprint of a single FRAM site. The average density of these external cargo items is approximately 18 lb/ft^3. The remaining 10 percent of external cargo items is utilization experiments that typically will fit within an envelope of 34 in. by 46 in. by 49 in., the approximate dimensions of an EXPRESS pallet experiment, and weigh approximately 500 lb (227 kg). These dimensions do not include the necessary spacing requirements for robotic removal from the vehicle.

Only 2 percent of the external cargo items have requirements for keep-alive power (power for internal systems and/or communications equipment). These requirements are not included as part of the DRM cargo support requirements and are out of scope for this study. Depending on the thermal environment and the flight attitude of the AAS vehicle, some of the external cargo items may require thermal heaters to maintain the thermal qualification limits defined in the DRMs. These heaters will need to be sized by the AAS service provider.

5.3.2 Internal Cargo

The typical passive cargo complement for ISS logistics missions consists of the following:

a. 15 percent half-size CTB

b. 75 percent full-size CTB

c. 2 percent double-size CTB

d. 3 percent triple-size CTB

e. 3 percent M01 bags

f. 2 percent M02 bags

Only passive cargo is certified to be flown in the CTBs, which have an average density of approximately 37 lb/Cargo Transfer Bag Equivalent (CTBE) (17 kg/CTBE). Of the internal cargo identified, 99 percent of the individual cargo items are less than 200 lb (91 kg).

The internal active cargo complement for the AAS will typically consist of 7 to 17 powered Middeck (MDK) experiments at 0.1 kW each average power. Nearly all of the internal active cargo items are 1 MDK size, 2 $ft.^3$, with an average weight of 60 lb (27 kgs). A few powered experiments will utilize a double (2), triple (3), or quad (4) MDK arrangement.

6.0 GROUND PROCESSING

The section on ground processing was included in the PRD because a system concept must include the provisions for accommodating cargo processing. The reason the service will exist is for the cargo. It is important that each concept account for the necessary cargo-driven processes and associated costs. These may be unique to each concept. Although the cargo community/ISS will eventually absorb the costs through service fees, the costs must be made visible to the ISS and AAS developers. Service providers able to piggy-back on existing systems and facilities will not have to develop the stand-alone capabilities that those operating from remote locations will find necessary.

In the detailed design phase, best value to the ISS Program may be obtained by allowing the ISS/AAS interfaces and processes to be uniquely identified for each type of cargo the service provider is supporting. However, at the concept stage, it is appropriate that the service providers accommodate the existing standard ISS processes and interfaces. Additionally, the ISS expects certain capabilities from the existing logistics support system. Service providers should not assume that the ISS will make significant changes in expectations at this point of development. Ground processing requirements and timelines found in the DRMs are consistent with existing capabilities. Deviation from these capabilities will require a case-by-case analysis. Development of such new requirements was not within the scope of the study developing the PRD.

Some of the requirements found below may not be applicable to systems not supporting the full range of potential ISS cargo. An example of this is the requirement for launch site utilization cargo processing facilities. A concept developer that does not include these requirements reduces attractiveness to the ISS program unless offset by significant cost savings.

6.1 LAUNCH PROCESSING

The majority of the cargo (systems and utilization) will be transferred from the ISS program to the service provider at KSC. Internal cargo will be flight ready, packed in bags or lockers, as described in Section 9.3.1. External cargo will be flight ready, attached to FRAMs, as described in Section 9.3.2, and packaged in ISS approved shipping containers.

Rationale: All cargo is currently processed through KSC. Shipping, tracking, and processing procedures establish final flight readiness at KSC with the cargo packaged for installation into the launch vehicle. The minor exception to this is U.S. cargo flown on the Progress. It was determined that a standard transfer point will reduce the variables for the concept developers.

The service provider will transport and maintain the cargo in compliance with ground handling and ground environmental requirements as defined for each cargo element. Generically, these requirements provide for the control and monitoring of environmental

factors, such as acceleration, temperature, humidity, cleanliness, electrical grounding/bonding, and static charge.

Rationale: All cargo has transportation constraints and limitations. These are unique to each item. It is necessary that the concept developers recognize that special transportation is required. The imposition of the unique and specific limits and requirements for each cargo item is not appropriate at the concept level.

At the launch site, the service provider will be responsible for storage, removal from shipping containers, and installation into the vehicle cargo sub-carrier/carrier.

Rationale: When the cargo is transferred to the service provider, the service provider assumes all responsibility until the cargo is transferred to the ISS. ISS will not normally provide cargo handling personnel or standard cargo handling equipment.

Certain utilization cargo will require cargo provider performed processing at the launch site similar to that performed at the KSC Space Station Payload Processing Facility (SSPF). The AAS service provider will supply the necessary facilities, equipment, and services for support. The cargo owner will normally ship the cargo to the launch site and provide personnel and unique equipment to perform any required processing.

Rationale: To be of maximum benefit to the ISS program, utilization cargo requiring launch site processing must be accommodated. In the current system, this is performed by the cargo provider in the KSC SSPF. A similar process and capability is needed at the service provider launch site.

Upon completion of processing, the cargo provider will transfer the flight-ready cargo to the AAS service provider for integration into the AAS vehicle cargo sub-carrier/carrier. Internal cargo will be in bags or lockers. External cargo will be attached to a FRAM. These cargos will require environmental controls as defined above. They may also require services, such as power, fluids, purges, etc.

Rationale: This is consistent with existing processes.

The service provider is responsible for the cargo from the point of transfer to delivery to the ISS. The provider will supply all necessary personnel, facilities, support equipment, services, consumables, etc., to accomplish all aspects of transportation and ground handling.

Rationale: When the cargo is transferred to the service provider, the service provider assumes all responsibility until the cargo is transferred to the ISS. ISS will not normally provide cargo handling personnel or standard cargo handling equipment.

The service provider will accommodate late installation of time-critical or sensitive cargo. For extended launch delays or scrubs, cargo providers will be provided access to replenishment hardware, as required. This will normally require cargo removal and return to the processing facility for delays greater than twenty-four hours.

Rationale: Some cargo requires late installation into the launch vehicle and reprocessing/servicing in the event of a launch delay. This is especially important for biologicals and chemicals. This capability exists within the existing system.

6.2 RETURN PROCESSING

AAS systems providing recoverable cargo capability (DRM, AAS 7) must accommodate return cargo processing. In this system, the AAS service provider will remove the cargo from the vehicle, de-integrate it from carriers, package it in required shipping containers, and return the cargo to KSC. Bags and lockers will not be opened. Hardware on FRAMs will be transported in ISS supplied and approved shipping containers.

Rationale: This is consistent with existing processes. All return cargo is processed through KSC facilities where it is prepared for return to the owners.

Early access to time-critical or sensitive utilization cargo will also be provided. In this case, the cargo will be removed from the vehicle, de-integrated from carriers, and returned unopened to the cargo provider in the AAS payload processing facility.

Rationale: Some cargo requires early attention from the cargo owner. This is especially important for biologicals and chemicals. This capability exists within the existing system.

The AAS service provider is responsible for the cargo from the point of installation of the cargo in the vehicle at the ISS to return to the cargo provider. The service provider will supply all necessary personnel, facilities, support equipment, services, consumables, etc., to accomplish all aspects of transportation and ground handling. The requirements for this are similar to those for launch processing. See Figure 6-1 for an overview of the ground processing.

Rationale: For down cargo, the service provider assumes all responsibility from on-orbit installation into the AAS vehicle until delivery to the cargo owner. ISS will not normally provide cargo handling personnel or standard cargo handling equipment.

6.3 KSC CONSIDERATIONS

AAS service providers using KSC/Cape Canaveral Air Force Station (CCAFS) as the launch facility will receive all utilization and systems cargo at KSC. Service providers that include return recoverable capability and use KSC/CCAFS as the landing site will likewise return all cargo at KSC. In either of these cases, it may be assumed that cargo provider-performed prelaunch and postlaunch processing is accomplished in the SSPF, and the AAS service provider is not required to duplicate the capabilities of the facility. All other requirements in Sections 6.1 and 6.2 apply.

Rationale: It is reasonable that existing facilities providing support to the ISS program be utilized. This minimizes duplication and reduces complexity within the ISS program.

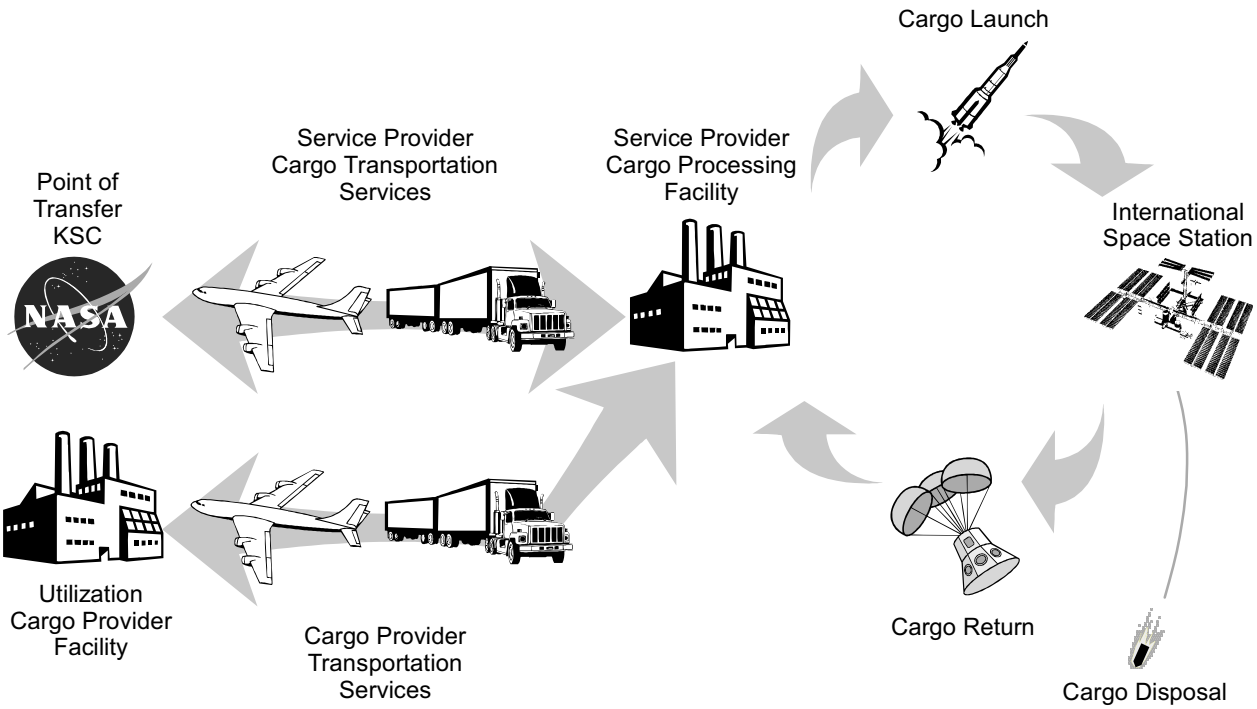

Figure 6-1. Typical cargo transfer flow

6.4 CARGO TRANSFER AND GROUND HANDLING REFERENCE REQUIREMENTS

Existing ISS requirements define agreements between ISS, existing launch vehicles, and launch facilities and describe the unique characteristics and capabilities/limitations of the existing ground processing and launch systems.

An overview of ISS Requirements for specific cargo hardware ground processing is found in SSP 50200-06, Station Program Implementation Plan Volume 6, Cargo Physical Processing. In particular, Section 5.0 – Russian Space Agency (RSA) Ground Processing, describes the current cargo ground processes that are closest to what will be expected of AAS processing. Specific processing and handling requirements, including late and early access, will be specified in payload-unique Payload Integration Agreements (PIAs). For Standard Payload Integration Agreements, refer to Section 7.0 in both SSP 57059, Standard Payload Integration Agreement for Pressurized Payloads, and SSP 57061, Standard Payload Integration Agreement for Unpressurized Payloads. In addition, SSP 50520, International Space Station Logistics and Maintenance Operational Support Document, Section 6.3, defines general transportation and handling requirements for ISS ORUs.

Rationale: These references provide insight for concept developers into existing requirements and capabilities.

7.0 TRAFFIC MODEL

As part of the process identified to generate AAS DRM, it was noted early on that a series of Traffic Model (TM) Analyses would be required to establish the ISS upmass/downmass requirements and the available flight opportunities for an AAS vehicle. These TM analyses were based on the last formal TM analysis cycle (DAC 8) performed by the ISS and modified as required to provide answers to the specific cases desired. The full set of assumptions, traffic model parameters, and TM results are provided as Appendix H of this document. Due to the short timeframe for this study, and the parallel work to define the DRMs as the TM were being developed and reviewed, not all of the results will perfectly match the upmass requirements in the DRMs. However, the results are still within the predicted average and maximum loads for each case and will not significantly impact the final results of this study.

Although the DAC 8 TM was used as the basis for this study, one major difference was incorporated into the analysis. The DAC 8 TM assumed the Payload requirement for upmass as 38 percent of the total annual upmass capability. Since this requirement will change by adding or deleting flights during the analysis, a fixed Payload requirement was requested from the ISS Payloads Office (OZ) resulting in the following requirement for the AAS study:

a. 9200 kg pressurized cargo (non-Russian)

b. 1950 kg unpressurized cargo (non-Russian)

- 1370 kg ⇒ 6 EXPRESS Pallet equivalent payloads per year (non-Russian, non-NASDA)
- 580 kg ⇒ 2.5 EXPRESS Pallet equivalent payloads per year (NASDA only)

The unpressurized cargo was determined by assuming 3 on-orbit EXPRESS Pallets with 6 sites each for a total of 18 EXPRESS Pallet equivalents, plus 4 EXPRESS Pallet equivalents on the Columbus Operating Facility (COF), plus 5 locations on the Japanese Experiment Module-Exposed Facility (JEM-EF). The JEM-EF locations are designed for larger sized payloads that are 2 EXPRESS Pallet equivalents, so they are accounted for as 10 EXPRESS Pallet equivalents. Therefore, there are a total of 32 (18 + 4 + 10) EXPRESS Pallet equivalents for non-Russian and non-NASDA experiments. With the assumption of a 4-year on-orbit average, this equates to 8 EXPRESS Pallet equivalents per year. But this was rounded down to 6 EXPRESS Pallet equivalents per year to match a single EXPRESS Pallet capability. An EXPRESS Pallet equivalent is assumed to be 500 lb (230 kg). A similar philosophy was used to determine the 2.5 EXPRESS Pallet equivalents per year for the NASDA allocation for the 5 JEM-EF sites. However, this requirement does not include an allocation for a large truss payload replacement similar to the Alpha Magnetic Spectrometer (AMS). Due to of the large size and infrequency of replacement, this was considered outside the scope of the study, and therefore, was not included as part of the Payload requirement.

In summary, a total of 8 TM cases were identified during the duration of this effort. These cases were further reviewed, and DRMs were created as deemed necessary based on this review. The specific TM cases and dispositions are as provided below.

7.1 AAS STUDY BASELINE DERIVED FROM DAC 8 (TM 1)

A baseline case was developed for this study based on the DAC 8 TM. This case incorporated the fixed Payload requirement and assumed 4 shuttle flights per year versus the 5 flights per year in the DAC 8 TM. The results of this TM analysis were used to compare the relative benefit of the AAS vehicle with the current set of resupply vehicles.

7.2 MINIMUM CARGO CASE (TM 2)

The Minimum Cargo AAS case represent a scenario that has the minimum need for an AAS vehicle and results in the lowest annual cargo requirements for the vehicle. This case required adding 2 AAS flights per year to a modified baseline case. The minimum case assumes a shuttle logistics flight rate of 4 per year and 1 CRV flight every 3 years. Shuttle flights include 1 external cargo flight per year and 3 mixed (internal/external cargo) flights per year.

7.3 MAXIMUM CARGO CASE (TM 3)

The Maximum Cargo AAS case represents a scenario that will result in the maximum anticipated need for an AAS vehicle. This scenario was produced by eliminating the use of the H2A Transport Vehicle (HTV) and Ariane Transport Vehicle (ATV) for cargo transportation to the station. The shuttle rate is the same as the minimum case: 3 mixed flights per year, 1 external cargo flight per year, and 1 CRV flight every 3 years. The last scheduled shuttle flight in October 2020, was scrubbed because the cargo upload demand was not great enough to justify the flight. In order to fulfill the propellant requirements, the Progress was modeled with a flight rate of 4 per year.

7.4 NOMINAL CASE WITH MIXED CARGO (TM 4)

All post assembly complete shuttle flights for this case are mixed flights that carry on average 511 kg of unpressurized cargo, 3418 kg of pressurized cargo, 193 kg of fluid and, 25 kg of gas. The average download for the shuttle flights is 5067 kg of cargo with 74 percent of it pressurized and 26 percent unpressurized.

The last scheduled shuttle flight in October 2020 was scrubbed due to lack of cargo. By the end of the model, there is not enough cargo that the shuttle can accommodate to justify a flight. The next to last shuttle flight still only carries 1699 kg of cargo up since there is such a small backlog and cargo requirement that the shuttle can accommodate at the end of the model.

7.5 NOMINAL CASE WITH INTERNAL CARGO (TM 5)

The nominal case with an all pressurized AAS vehicle is similar to the nominal mixed case. The cargo requirements for both cases are the same, and the general schedule is similar. The major difference between the cases is that the all pressurized AAS case uses 1 unpressurized shuttle flight per year in place of a mixed shuttle flight. The same HTV and ATV flights are scrubbed; however, the scrubbed shuttle flight in 2013 is an unpressurized flight instead of mixed. Also, the last shuttle flight in 2020 that was scrubbed in the nominal mixed case is included in the nominal all pressurized case.

7.6 NOMINAL CASE WITH ALL EXTERNAL CARGO (TM 6)

The flight schedule and the requirements for the all unpressurized AAS vehicle case is the same as for the all pressurized AAS case. The only difference is the capability of 2 of the vehicles in the model. For this case, all shuttle flights only have the capability to carry pressurized cargo, and conversely, the AAS only has the capability to carry unpressurized cargo.

7.7 NOMINAL CASE WITH DECREASED PROGRESS FLIGHTS (TM 7)

The nominal case with decreased Progress flights consists of the requirements and vehicles used in the nominal case; however, the 13 Progress flights are scrubbed after assembly complete. Although the scrubbed flights lower the Progress flight rate to 3 per year, propellant demand requires 4 Progress flights in 2012 when there is high solar activity. Another change between the nominal mixed AAS case and the decreased Progress case is the vehicle performance capability of the AAS. In the nominal mixed AAS case, the AAS vehicle can carry 4000 kg of pressurized cargo to the station. In this case, the pressurized cargo performance of the AAS is increased to 5850 kg. As in the nominal case, the decreased Progress case uses all mixed shuttle flights past assembly complete, and the last shuttle flight in October 2020, is removed.

7.8 NOMINAL CASE WITH INCREASED UTILIZATION (TM 8)

The increased utilization case is the same as the nominal case except every utilization requirement has been increased by 30 percent. This case uses all mixed shuttle flights along with the ATV, HTV, Progress and mixed AAS. Lack of cargo upload requirements facilitates the last shuttle flight in October 2020 being scrubbed. At the end of the model the only backlog remaining is 2466 kg of shuttle water, 157 kg of Russian Segment (RS) Gas, and 3873 kg of propellant. With the last shuttle flight included the 157 kg of gas is the only cargo loaded. The backlog of shuttle water is a result of the HTV being the only vehicle able to load shuttle water. This issue also appears in the nominal mixed AAS case and is addressed in Section 5.6.1. Also similar to the nominal mixed AAS case, the propellant backlog at the end of the model is very small when considered over the life of the model.

7.9 THREE CREW ISS CORE CASE WITH IP VEHICLES

This traffic model case was intended to develop upmass/downmass requirements for a Core Complete Configuration ISS on-orbit vehicle with three-member crew and IP vehicle supply capability.

This case was excluded after initial ISS DAC 8 analyses indicated that there was no anticipated up mass shortfall with a three-person ISS crew.

7.10 THREE CREW ISS CORE CASE WITHOUT IP VEHICLES

This traffic model case was intended to develop upmass/downmass requirements for a Core Complete Configuration ISS on-orbit vehicle with three-member crew and without the benefit of IP vehicle supply capability.

This case was excluded after initial ISS DAC 8 analyses indicated that there was no anticipated up mass shortfall with a three-person ISS crew.

7.11 SIX CREW ISS CASE WITH IP VEHICLES

This traffic model case was intended to develop upmass/downmass requirements for an ISS on-orbit vehicle configuration capable of supporting a six-member crew with IP vehicle supply capability.

This case was excluded after initial assessments indicated that the three-person and seven-person TM cases bounded these requirements.

7.12 SIX CREW ISS CASE WITHOUT IP VEHICLES

This traffic model case was intended to develop upmass/downmass requirements for an ISS on-orbit vehicle configuration capable of supporting a six-member crew without the benefit of IP vehicle supply capability.

This case was excluded after initial assessments indicated that the three-person and seven-person TM cases bounded these requirements.

8.0 DESIGN REFERENCE MISSIONS

The purpose of the DRMs is to provide representative ISS resupply missions for the AAS vehicle to assist in the development of operational concepts during the early phase of the AAS contract. These DRMs have been created based on the best data available for the ISS current requirements and cargo projections as identified by the Traffic Model analysis. Each DRM can be linked to a specific TM case. The results of the TM were then combined with statistical data from the cargo matrix and from previous ISS resupply missions to develop representative cargo complements for each DRM. Additional data, such as cargo support requirements and qualification limits, were also included to assist in the development of operational concepts for the AAS system.

8.1 DRM PARAMETER

The following parameters are used to define and differentiate the DRMs. The assumptions and rationale for parameters are included in the description below. Over the course of this study, these parameters have changed slightly to better convey the information. They also include categories that were required as the study continued.

8.1.1 DRM ID

This is an arbitrary identification of the DRM.

8.1.2 Description

A short text description of the DRM and type of vehicle(s) required for the DRM.

8.1.3 Cargo Type

This type of cargo will typically be manifested on the vehicle. Cargo items will either be categorized as Systems or Utilization. The third category, Assembly, was not included for the AAS vehicle because these are typical large elements with a baselined flight in the ISS assembly sequence. The AAS vehicle will not be required to accommodate this hardware. This parameter combined the cargo group major type and minor type sub-categories included in the cargo matrix. The most important information from the minor type sub-category is whether the cargo is passive or active. This has been included as part of this DRM parameter.

8.1.4 Cargo Hazards

This category defines the different types of potential hazards that may be encountered with the cargo complement defined for each DRM. These hazards should be taken into consideration when developing the AAS System. For the development of operational concepts, these hazards can affect the transportation method to/from KSC as well as provide advanced information about potential hazards to the AAS vehicle. However, the cargo provider is responsible for providing appropriate levels of containment and

necessary packing to protect the cargo so that the AAS vehicle will not be exposed to these hazards.

8.1.5 Carrier Type

This defines the type of vehicle required to deliver the cargo defined in the DRM. A mixed cargo vehicle has the capability to accommodate both internal and external cargo at the same time on the same vehicle. A pressurized cargo vehicle only requires the capability to accommodate internal cargo. An unpressurized cargo vehicle only requires the capability to accommodate external cargo. The mixed cargo vehicle is preferable to the ISS Program as it will provide more flexibility and launch opportunities to deliver hardware to the ISS.

8.1.6 Total Mass (Cargo and Accommodations)

The total mass of hardware delivered to the AAS service provider, including all cargo, ISS provided packing, and ISS provided accommodations (e.g., bags, mounting hardware, such as FRAMs, etc.). The results of the traffic model and data in the cargo matrix are for ISS cargo only and do not include the accommodations factor.

For internal cargo, the accommodation factor of 30 percent was based on previous ISS and Shuttle Middeck experience and is documented in SSP 50261-01, Section 3.3.4.1.1.3. Other accommodation factors are listed in SSP 50261-01 for MPLM cargo; however, these factors account for the method of restraint in the MPLM (i.e., Resupply Stowage Racks and Resupply Stowage Platforms) and, therefore, are not appropriate for the AAS vehicle, which will develop a unique restraint system. Thus, the results of the Traffic Model for internal cargo are multiplied by 1.3 to obtain the total mass of cargo and packing accommodations (bags and internal restraints, such as foam or dividers) that will be delivered to the AAS service provider for delivery/return to/from the ISS.

For external cargo, the accommodation factor of 120 percent was derived based on the analysis of ORU and projected FSE weights for flights ULF-2, UF-3, UF-4, UF-5, 14A, and UF-6, as shown in Table 8-1.

Table 8-1. External cargo FSE to cargo mass ratios

Flight*	ORU	FRAM	ORU Weight (lbs)	FSE Weight (lbs)	Total Weight (lbs)	Launch Location
ULF-2 External Cargo						
	RF Group	1				LMC
	LEE	1	420	546	966	LMC
	14kW HX	1				
	Joint P/R	1	219	285	504	LMC
	RBVM (2)	1	112	362	474	ICC
	BCDU	1	234	328	561	ICC
	Totals	6	985	1521	2506	
					FSE to Cargo %	154%
UF-3 External Cargo						
	FHRC	2	453	557	1010	ICC
	DCSU	1	218	218	435	ICC
	UTA	2	204	378	583	ICC
	Pump Module	4	848	848	1696	LMC
	BCDU	1	258	282	539	ICC
	Totals	10	1980	2283	4263	
					FSE to Cargo %	115%
UF-4 External Cargo						
	Pump Module	4	848	848	1696	LMC
	Totals	4	848	848	1696	
					FSE to Cargo %	100%
UF-5 External Cargo						
	Joint Yaw	1	219	285	504	LMC
	LEE	1	420	546	966	LMC
	Totals	2	639	831	1470	
					FSE to Cargo %	130%
14A External Cargo						
	NH3 Tank	4	1790	1324	3114	ICC
	HP N2 Tank	4	803	594	1398	VCC
	UTA	2	204	378	583	VCC
	CMG	1	599	651	1250	ICC
	BCDU	1	258	282	539	ICC
	Totals	12	3654	3230	6884	
					FSE to Cargo %	88%
UF-6 External Cargo						
	BCDU (qty. 3)	3	701	983	1683	LMC
	DCSU	1	218	218	435	LMC
	Totals	4	918	1200	2118	
					FSE to Cargo %	131%

Avg FSE to Cargo % **120%**

* ORU and Carrier Selection based on Maintenance Reference Mission from 10A - UF6, 19 November 2001

Therefore, the results of the Traffic Model for external cargo are multiplied by 2.2 to obtain the total mass of cargo and packing accommodations (active FRAM and adapter plate) that will be delivered to the AAS service provider for delivery to the ISS.

Because of the wide range for external packing accommodations (approximately 85 percent to 150 percent) and the low ratio of cargo to packing accommodations, the ISSP is currently investigating this issue. These results were not available at this time but are planned to be included as part of the next VIPeR team Traffic Model analysis delivered to the ISSP.

8.1.7 Total Volume (Cargo and Accommodations)

The total volume of hardware delivered to the AAS service provider, including all cargo, ISS provided packing, and ISS provided accommodations (e.g., bags, mounting hardware such as FRAMs, etc.). This volume does not include clearance envelopes, translation paths, stay-outs zones, etc. required to remove hardware from the AAS vehicle. The data in the cargo matrix are for ISS cargo only and do not include the accommodations factor.

Since the traffic model only provides upmass and downmass, an average density was determined based on previous ISS resupply flight experience and from data in the cargo matrix. These average densities were used to determine the total volume of the cargo.

8.1.8 ISS Transfer Method

This method is used to transfer the cargo. Internal cargo is transferred via Intravehicular Activity (IVA). External cargo will be transferred via EVR - Extravehicular Robotics.

8.1.9 ISS Attach Period

This defines the minimum and maximum duration the AAS vehicle can remain attached to the ISS. The minimum time was defined as the amount of time to transfer all of the cargo. This was based on the current strategic estimate of 22.5 minutes per CTBE to unload the cargo and approximately 75 percent of that time to load the vehicle. The load time is reduced assuming nonrecoverable cargo that does not need to be carefully packed. The available time for cargo transfer was assumed to be 16 hours per day (roughly equal to two crew working 8 hours each). For external cargo, it was assumed to be approximately one-half day for each FRAM site based on previous studies estimating ORU replacements. Although the cargo could potentially be unloaded in a much shorter time based on current shuttle resupply flights to the ISS or by committing more crew members to transfer cargo, this was not deemed nominal operations to define a minimum cargo transfer time. The maximum duration was based on results from the traffic model analysis for vehicle traffic at the nominal docking ports.

8.1.10 Cargo Support Requirements

The support required by the cargo during different phases of the mission to be supplied by the AAS service provider. These requirements include resources (power, cooling, data), which only apply to internal cargo; external cargo will need to be maintained within the limits defined in the cargo qualification limits category since resources such as power will be highly dependent on the vehicle flight attitudes and cargo thermal environment. Late/early access requirements are defined as the time at which cargo is turned over to the AAS service provider for integration into the vehicle (late access), or the time at which cargo is turned over to the cargo owner for post flight processing (early access). The amount of cargo required for late/early access is defined as the number of MDKs identified in the total volume category. The CTBE category refers to a percentage of the total internal volume that should be accessible for late stowage of passive cargo until the time indicated and accessible for early retrieval by the time indicated. This requirement was based on the timeline and amount of cargo accessible in the MPLM.

8.1.10.1 Power/Cooling

The cargo support requirement of power/cooling was determined based on the strategic groundrule of 100 W per powered single Middeck locker.

8.1.10.2 Data

The cargo support requirement for data was based on information developed by the AAS team. It was assumed to be 100 Kbps for telemetry and commanding of powered Middeck payloads based on Payload requirements and current off the shelf data capabilities. For the larger powered Middeck complements, it was assumed to be approximately 150 Kbps. The non-linearity of the estimates is due to appropriate scheduling of data transfer (i.e., do not schedule a downlink for all parameters at the same time). For the recoverable descent DRM, AAS 7, a general rule of 10 Kbps per powered Middeck can be assumed. This requirement is for all phases of the mission, including the duration attached to the ISS, and is based on the shuttle capability to transfer Payload data via S-band during ascent, attached operations with the ISS, and descent (minus some short communication blackout periods).

8.1.10.3 Late/Early Access

The late/early access requirement is based on current shuttle processing timelines for access to the Middeck for powered Middeck lockers and access to the MPLM passive cargo. The MPLM access constraints are documented in SSP 50261-01, Section 3.7.1.5 and 3.7.1.6.

8.1.11 Cargo Qualification Limits

This category defines the qualification limits of the cargo that the AAS vehicle will deliver. The loads provided are based on the Shuttle Coordinate System, as defined in Appendix J of this document.

8.1.11.1 Internal Cargo

The cargo qualification limits were defined as the most restrictive limits from the MPLM and Shuttle Middeck. Therefore, the AAS vehicle will be capable of delivering all cargo delivered to the ISS based strictly on the qualification limits. The range of cargo load limit factors for shuttle carriers is listed in Table 8-2. The internal cargo thermal limits are listed in Table 8-3.

Table 8-2. Shuttle carrier internal cargo load limits

	Limit Load Factors (g)		
	Nx	Ny	Nz
MPLM			
Liftoff	+/- 7.7	+/- 11.6	+/- 9.9
Landing	+/- 5.4	+/- 7.7	+/- 8.8
Middeck			
Liftoff	+/- 9.0	+/- 3.2	+/- 7.4
Landing	+/- 6.25	+/- 2.5	+/- 12.5
Spacehab - Bulkhead			
Liftoff	+/- 6.6	+/- 1.5	+/- 5.9
Landing	+/- 9.5	+/- 2.5	+/- 9.0
Spacehab - Rack			
Liftoff	+/- 5.5	+/- 3.5	+/- 10.0
Landing	+/- 6.5	+/- 2.5	+/- 12.5
Spacehab - Subfloor			
Liftoff	+/- 4.3	+/- 9.0	+/- 10.7
Landing	+/- 3.6	+/- 7.4	+/- 5.9

Notes:

1. MPLM load factors are documented in SSP 57000, Pressurized Payloads Interface Requirements Document

2. Middeck and Spacehab load factors are documented in NSTS 21000-IDD-MDK, Shuttle Interface Definition Document for Middeck Payloads

Table 8-3. Internal cargo thermal limits

Pressurized Cargo Thermal Limits		
Payload Type	Active	Passive
Launch	20 to 30 degrees C	18.3 to 26.7 degrees C

8.1.11.2 External Cargo

To facilitate the development of environments for different ISS external cargo environments, the ISS program has begun a categorization process to capture similar cargo elements attributes, based mainly on mass and volume. The purpose of the categorization is to develop a standard system of carriers/cargo envelopes, for launching external cargo to orbit in the most efficient, functional and cost effective way possible. ORU categorization is the basis for standardizing carrier layouts based on the predicted ORU traffic.

There are approximately 180 types of external ORUs and ancillary equipment considered in the categorization process. As mentioned previously, categorization is based on the following criteria:

a. Similar physical attributes (weight/volume)

b. Frequency of launch

c. Unique launch orientations

To standardize carrier layouts, ORUs with a number (#) of Maintenance Actions (MAs) per year that is greater than 0.10 were included in the categorization process. For those ORUs that have a value less than 0.10, they were excluded due to the infrequency of flight and were found to have minimal enough impact on the standard carrier layouts. From this process, the following standard categories have been defined.

a. Cargo Transport Container (CTC) (40 ORUs and other; 13 FRAM sites per year; factors in number of maintenance actions per year (#MAs/year))

    1. CTC estimated to be [36” by 47” by 25”] = 25 cu ft (includes the BMRRM and ETVCG which exceed the Z dimension but CTC may be flexible enough) volume predictions include a packing factor of 100 percent (extra volume for packing inefficiency)

b. Direct Mount (4 ORUs; assume 10 FRAM sites/year; factors in #MAs/year)

    1. D1 - Radiator

    2. D2 - PV Radiator and Scissorbeam

    3. D3 - ATA

    4. D4 - ARM (SPDM)

c. FRAM Mount (15 ORUs; assume 12 FRAM sites/year; factors in #MAs/year)

    1. F1 - FHRC, NTA, Pump Module

2. F2 - BCDU, DCSU, MBSU, Plasma Contactor, Joint (Pitch and Yaw), PFCS, LDU

3. F3 - DDCU-E-HP, SASA

4. F4 - UTA, LEEs

5. F5 - Battery Assy

6. F6 – CMG

For those items with MAs less than 0.10, the following non-standard categories have been defined.

d. Direct Mount

1. D5 – Thermal Radiator Rotary Joint

2. D6 – ORU Base Assembly

3. D7 – Electronic platform 1 and 2

4. D8 – High Pressure O_2 and N_2 Tanks

e. FRAM Mount

1. F7 – Ku Band Antenna

2. F8 – MT/TUS Reel

Based on this categorization, the next step in categorization was to envelope both the design load factors and thermal environments for the ORUs grouped in each defined category. Additionally, special requirements were identified for each category regarding orientation of ORUs with regards to their design load factors. Table 8-4 provides a tabular listing for the standard categories while Table 8-5 provides a tabular summary for the non-standard categories.

Table 8-4. Standard category external cargo attributes

Standard Cargo Categories							
Category Envelopes	Cargo Class	# ORUs	Volume / Max	Mass Range (ORU+FSE)	Special Requirements	Load Factors	Thermal Ranges
						Nx, Ny, Nz (g's)	
Carrier Sized							
Radiator	D1	1	114 x 135 x 32	2966	possible orientation critical	+/-6.24, +/-3.05, +4.22/-5.27	-43/+71 degrees C
PV Radiator /Scissorbeam	D2	1	154 x 81 x 25	1848	orientation critical	+0.3/-4.8, +/-2.1, +/-3.75	-43/+71 degrees C
Double FRAM Sized							
ATA	D3	1	89 x 57 x 45	1400 up 2167 dn	possible orientation critical	+4.9/-6.42, +1.8/-2.1, +4.68/-3.84	-43/+71 degrees C
ARM (SPDM)	D4	1	113 x 35 x 22	850		No Data	-43/+71 degrees C
FHRC, NTA, Pump Module	F1	3	69 x 48 x 37	1180 - 770	orientation critical	+/-6.5, +/-1.9, +/-5.05	-43/+71 degrees C
JEM Payloads (F1)	F1	2	73 x 40 x 32	1200			-43/+71 degrees C
DDCU-E-HP, SASA	F3	2	86 x 43 x 33	535 - 420		No Data	-43/+71 degrees C
Single FRAM Sized							
BDCU, DCSU, MBSU, Plasma Contactor, Joint (Pitch), PFCS, Linear Drive Unit, Joint (Yaw) (SSRMS)	F2	8	41 x 41 x 22	623 - 391		-3.48/-6.12, +/-3.95, +/-7.93	-43/+71 degrees C
UTA, LEE, LEE (POA) Assembly, Latching End Effector (LEE) GA (SPDM)	F4	4	42 x 32 x 35	694 - 478		+/-10.0, +/-2.5, +/-2.5	-43/+71 degrees C
Columbus Payloads	F4	2	41 x 41 x 22	700			-43/+71 degrees C
Battery Assy	F5	2	41 x 37 x 19	751	flown in pairs	-3.52/-6.08, +/-4.0, +/-7.77	-43/+71 degrees C
CMG	F6	1	52 x 47 x 46	906		+/-10.0, +/-2.5, +/-2.5	-43/+71 degrees C
CTC Sized ORU's (CTC = 36x47x25)	CTC	68	various	186 - 1.3	weights of ORU only	+/-13.0, +/-3.25, +/-3.25	-43/+71 degrees C

Table 8-5. Non-standard category external cargo attributes

Non-Standard Cargo Categories							
Category Envelopes	Cargo Class	# ORUs	Volume / Max	Mass Range (ORU+FSE)	Special Requirements	Load Factors	Thermal Ranges
						Nx, Ny, Nz (g's)	
Thermal Radiator Rotary Joint (TRRJ) Complete Assy	D5	1	60 x 54 x 38	1328	orientation critical	No Data	-43/+71 degrees C
ORU Base Assembly	D6	1	94 x 49 x 16	502		No Data	-43/+71 degrees C
Electronic Platform #1 & #2	D7	2	51 x 45 x 11	308 - 250		No Data	-43/+71 degrees C
High Pressure O2 & N2 Tanks	D8	1	62 x 76 x 52	1247		No Data	-43/+71 degrees C
Ku Band Antenna Group (SGANT)	F7	1	10 x 72 x 72	490	possible orientation critical	7.7 (in all axes)	-43/+71 degrees C
MT/TUS Reel	F8	1	60 x 56 x 26	617		+/-13.0, +/-3.25, +/-3.25	-43/+71 degrees C

Upon review of the data in the tables, there is a noted variance between design load factors from individual categories with some categories identifying orientation criticality for ORUs contained within a given category. Therefore, it is not appropriate to attempt to envelope all of the load factors across all categories. For the purposes of the Design Reference Mission matrices, a representative frequent flyer category was selected as an initial design case rather than specifying all of the load factors for the individual categories in each DRM matrix. However, each developer should be made aware that the choice of specific identified cargo to be flown will need to be evaluated against the categories listed in the tables and the listed design load factors.

For the thermal ranges published in the DRM matrices, and for those found in the tables, these values represent the broad range across all of the categories and is consistent from category to category.

8.1.12 Available at transfer location

This is the time at which the AAS service provider can pick up the cargo from the transfer location to transport it to the launch site.

8.1.13 Cargo manifest defined

This is the time from when the mission is identified and a cargo manifest is defined (type and number of bags) to when the AAS vehicle is attached to the ISS. This time was based on the current processing time for the Progress vehicle.

8.1.14 Cargo Transfer Location

This is the location where the AAS service provider receives the cargo.

8.1.15 Cargo Return Location

This is the location where the AAS service provider delivers returned cargo.

8.1.16 Flights per Period

This is the projected average flight rate per year for a specific DRM that best accommodates the operational constraints of the ISS, in particular, the ISS microgravity quiescent period and other vehicle traffic.

8.2 SUMMARY OF DRMS

A total of six primary DRMs, AAS 1 – AAS 6, have been identified for the AAS service providers and are shown in Table 8-6. Each of these DRMs assumes the vehicle is capable of an equivalent amount of cargo mass and volume for non-recoverable, destructive descent, as is available for ascent. One optional descent DRM, AAS 7, has also been included for internal, recoverable cargo. Although this DRM is not a requirement for the AAS vehicle, it is considered desirable for the AAS vehicle to accommodate pressurized return cargo.

Table 8-6. AAS DRM matrix included in the PRD

DRM ID	AAS 1	AAS 2	AAS 3	AAS 4	AAS 5	AAS 6	AAS 7
Description	Logistics skip cycle support Pressurized cargo vehicle	Maximum annual cargo Mixed cargo vehicle	Minimum annual cargo Mixed cargo vehicle	Nominal annual cargo Mixed cargo vehicle	Nominal annual cargo Pressurized cargo vehicle	Nominal annual cargo Mixed fleet of pressurized vehicles and unpressurized vehicles	Nominal descent recoverable cargo Pressurized cargo vehicle
Cargo Type	Systems - passive cargo	Systems and Utilization	Systems and Utilization	Systems and Utilization	Systems and Utilization	Systems and Utilization	Systems and Utilization
Cargo Hazards	Fluids Chemicals	Fluids Stored Energy Biologicals Chemicals Combustibles Fragiles	Fluids Stored Energy Biologicals Chemicals Combustibles Fragiles	Fluids Stored Energy Biologicals Chemicals Combustibles Fragiles	Fluids Stored Energy Biologicals Chemicals Combustibles Fragiles	Fluids Stored Energy Biologicals Chemicals Combustibles Fragiles	Fluids Stored Energy Biologicals Chemicals Combustibles Fragiles
Carrier Type	Pressurized	Mixed	Mixed	Mixed	Pressurized	Pressurized or Unpressurized	Pressurized
Total Mass, kg (cargo and accommodations)	Internal - 1500	Internal - 3460 External -1260	Internal -2830 External - 1470	Internal - 2300 External - 1230	Internal - 2330	Internal - 3850 External - 3090	Internal - 2600 annual avg
Total Volume (cargo and accommodations) Internal: CTBE / MDK External: ft^3 / apprx. # of FRAM sites	Internal - 90 / 0	Internal - 205 / 7 External - 70 / 4	Internal - 170 / 17 External - 80 / 4	Internal - 140 / 7 External - 70 / 4	Internal - 140 / 7	Internal - 230 / 12 External - 170 / 9	Internal - 150 / 35 annual avg
ISS Transfer Method	Internal - IVA	Internal - IVA External - EVR	Internal - IVA External - EVR	Internal - IVA External - EVR	Internal - IVA	Internal - IVA External - EVR	Internal - IVA
ISS Attach period	Min ~ 6 days Max ~ 35 days	Min ~ 10 days Max ~ 35 days	Min ~ 9 days Max ~ 21 days	Min ~ 8 days Max ~ 35 days	Min ~ 6 days Max ~ 35 days	Min ~ 4 days unpress ~ 10 days press Max ~ 35 days	Attach period included as part of ascent DRM
Cargo Support Requirements							
Ground	N/A	Power - 0.7 kW avg. Cooling - 0.7 kW avg. Data - 100 Kbps	Power - 1.7 kW avg. Cooling - 1.7 kW avg. Data - 150 Kbps	Power - 0.7 kW avg. Cooling - 0.7 kW avg. Data - 100 Kbps	Power - 0.7 kW avg. Cooling - 0.7 kW avg. Data - 100 Kbps	Power - 1.2 kW avg. Cooling - 1.2 kW avg. Data - 150 Kbps	N/A
Launch Pad	Late Access 25% CTBE L-88 hrs	Power - 0.7 kW avg. Cooling - 0.7 kW avg. Data - 100 Kbps Late Access MDK until L-19.5 hrs 25% CTBE until L-88 hrs	Power - 1.7 kW avg. Cooling - 1.7 kW avg. Data - 150 Kbps Late Access MDK until L-19.5 hrs 25% CTBE until L-88 hrs	Power - 0.7 kW avg. Cooling - 0.7 kW avg. Data - 100 Kbps Late Access MDK until L-19.5 hrs 25% CTBE until L-88 hrs	Power - 0.7 kW avg. Cooling - 0.7 kW avg. Data - 100 Kbps Late Access MDK until L-19.5 hrs 25% CTBE until L-88 hrs	Power - 1.2 kW avg. Cooling - 1.2 kW avg. Data - 150 Kbps Late Access MDK until L-19.5 hrs 25% CTBE until L-88 hrs	N/A
Ascent/Pre-transfer	N/A	Power - 0.7 kW avg. Cooling - 0.7 kW avg. Data - 100Kbps	Power - 1.7 kW avg. Cooling - 1.7 kW avg. Data - 150 Kbps	Power - 0.7 kW avg. Cooling - 0.7 kW avg. Data - 100 Kbps	Power - 0.7 kW avg. Cooling - 0.7 kW avg. Data - 100 Kbps	Power - 1.2 kW avg. Cooling - 1.2 kW avg. Data - 150 Kbps	N/A
Attached to ISS	N/A	Power - 0.7 kW avg. Cooling - 0.7 kW avg. Data - 100Kbps	Power - 1.7 kW avg. Cooling - 1.7 kW avg. Data - 150 Kbps	Power - 0.7 kW avg. Cooling - 0.7 kW avg. Data - 100 Kbps	Power - 0.7 kW avg. Cooling - 0.7 kW avg. Data - 100 Kbps	Power - 1.2 kW avg. Cooling - 1.2 kW avg. Data - 150 Kbps	N/A
Post Transfer (down cargo)	N/A	N/A	N/A	N/A	N/A	N/A	Power - 0.1 kW per MDK Cooling - 0.1 kW per MDK Data - 10 Kbps per MDK
Post landing (down cargo)	N/A	N/A	N/A	N/A	N/A	N/A	Power - 0.1 kW per MDK Cooling - 0.1 kW per MDK Data - 10 Kbps per MDK Early access MDK at L+4 hrs 25% CTBE at L+96 hrs
Cargo Qualification Limits	**Internal** Load Factors N(x) +/- 9.0 g N(y) +/- 11.6 g N(z) +/- 9.9 g Thermal 18.3 to 26.7 C	**Internal** Load Factors N(x) +/- 9.0 g N(y) +/- 11.6 g N(z) +/- 9.9 g Thermal 20 to 26.7 C **External** Load Factors N(x) +/- 10.0 g N(y) +/- 2.5 g N(z) +/- 2.5 g Thermal -43 to 71 C	**Internal** Load Factors N(x) +/- 9.0 g N(y) +/- 11.6 g N(z) +/- 9.9 g Thermal 20 to 26.7 C **External** Load Factors N(x) +/- 10.0 g N(y) +/- 2.5 g N(z) +/- 2.5 g Thermal -43 to 71 C	**Internal** Load Factors N(x) +/- 9.0 g N(y) +/- 11.6 g N(z) +/- 9.9 g Thermal 20 to 26.7 C **External** Load Factors N(x) +/- 10.0 g N(y) +/- 2.5 g N(z) +/- 2.5 g Thermal -43 to 71 C	**Internal** Load Factors N(x) +/- 9.0 g N(y) +/- 11.6 g N(z) +/- 9.9 g Thermal 20 to 26.7 C	**Internal** Load Factors N(x) +/- 9.0 g N(y) +/- 11.6 g N(z) +/- 9.9 g Thermal 20 to 26.7 C **External** Load Factors N(x) +/- 10.0 g N(y) +/- 2.5 g N(z) +/- 2.5 g Thermal -43 to 71 C	**Internal** Load Factors N(x) +/- 5.4 g N(y) +/- 7.7 g N(z)+/- 8.8 g Thermal 20 to 26.7 C
Response Period							
Avail. at transfer location	L - 14 days	L - 1 month	L - 1 month	L - 1 month	L - 1 month	L - 1 month	N/A
Cargo manifest defined	L - 40 days	L - 4 months	L - 4 months	L - 4 months	L - 4 months	L - 4 months	N/A
Cargo Transfer Location	KSC	KSC	KSC	KSC	KSC	KSC	N/A
Cargo Return Location	N/A	N/A	N/A	N/A	N/A	N/A	KSC
Flights per Year	N/A	5	2	5	5	3 Pressurized 2 Unpressurized	Flight rate determined by ascent DRM

Except for the first DRM, AAS 1, each DRM fully supports ISS projected requirements. Therefore, the AAS service provider only needs to select a single DRM to support instead of multiple DRMs. Ideally, a vehicle should be sized to accommodate any of the DRMs.

The estimate of the powered Middeck MDK lockers for all of the DRMs is based on the projected shortfall of the current methods of delivery. The Payload requirement is based on data provided by the ISS Payloads (OZ) office for 75 MDK per year. This estimate was derived by assuming 15 MDK per shuttle flight at 5 flights per year. This assumed the full capability of the upgraded shuttle thermal modifications. However, a more reasonable estimate assumed by the AAS team of Shuttle MDK capability based on volume, power, thermal, and distribution constraints of the Shuttle is an average of 10 powered Middecks per Shuttle flight at ISS assembly complete. Table 8-7 shows a

quick look at shuttle cryo/energy margins for various cases and how it may affect the total number of powered Middecks per flight. These resources are difficult to quantify on a generic basis because of their interdependency on each other and upon the cargo elements of the flight.

Table 8-7. Estimated shuttle cryo/energy margin

	9 + 1 + 2 day mission	10 + 1 + 2 day mission
Nominal	+120 kW hrs	-250 kW hrs
Delete MELFI	+230 kW hrs	-140 kW hrs
Delete R/F, include MELFI	+360 kW hrs	-10 kW hrs
Delete R/F, delete MELFI	+470 kW hrs	+100 kW hrs

Notes:

- Nominal case assumes:
  - 5 Full cryo tank sets
  - MPLM powered by ISS when mated
  - 1 MELFI
  - 1 Refrig/Freezer (1 kW)
  - 800 W for payloads (i.e., 8 powered Middeck lockers)
- 1 Flight day costs approximately 360 kW hrs
- 1 powered Middeck locker costs approximately 2.4 kW hrs per day
- A 9-day mission only allows approximately 3 days to unload/reload MPLM.

With the assumption of only 4 shuttle flights per year with an average of 10 powered Middeck lockers per flight, this results in a total of 40 powered Middeck lockers per year, with a shortfall of 35 powered Middeck lockers to meet the Payload requirement. This shortfall was evenly distributed across the total number of AAS flights for a particular DRM, and it defined the cargo support requirements for that DRM.

8.2.1 AAS 1 - Logistics Skip Cycle Support, Pressurized Cargo Vehicle

This mission is to support the resupply needs of the ISS in the event a planned vehicle cannot complete the mission. Therefore, this DRM does not have an associated planned flight rate. The vehicle was sized to provide nominal supplies for a 7-person

crew for 45 days. Since this DRM did not require a traffic model analysis, the upmass and volume were determined, based on the resupply requirements and current estimated usage rates. These supplies include food, clothes, towels, waste containers, etc. All of the cargo is internal and passive; therefore, it has no support requirements other than late access. This mission requires a maximum response period of 40 days from request of launch service to vehicle attached to ISS, which was defined based on the requirement for the Progress vehicle to be able to accomplish this same mission in 45 days.

8.2.2 AAS 2 – Maximum Annual Cargo, Mixed Cargo Vehicle

This DRM defines the projected maximum annual cargo for the AAS service provider. The results are based on TM 3. It assumes minimum support from the current IP vehicles (Progress, ATV, and HTV), and relies on the AAS service provider to make-up the shortfall. The flight rate of 5 flights per year was the maximum projected available that still met ISS micro-g requirements. The cargo complement will include both external and internal cargo. The internal cargo also includes an average of 7 MDK sized utilization experiments. These cargo items will require resources (power, cooling, data) as well as late access installation.

8.2.3 AAS 3 – Minimum Annual Cargo, Mixed Cargo Vehicle

This DRM is similar to the AAS 2, but it defines the projected minimum annual cargo for the AAS service provider. The results are based on TM 2. It assumes the current baselined flight rate of logistic vehicles (Progress, ATV, HTV). Only two flight opportunities are projected to be available and still meet the ISS micro-g requirements. The cargo complement for the DRM includes both external and internal cargo as well as an average of 17 MDK utilization experiments. These cargo items will require resources (power, cooling, data) as well as late access installation.

8.2.4 AAS 4 – Nominal Annual Cargo, Mixed Cargo Vehicle

The results of this DRM are based on TM 4. The nominal case DRM assumes the baseline flight rate of all vehicles but also assumes a projected failure rate and eventual launch slips to the schedule. These events will create a backlog of cargo for delivery to the ISS. Therefore, additional capability supplied by the AAS service provider will be required and planned into the launch schedule to account for this backlog. A total of 5 flight opportunities per year are projected for this case. The cargo complement for each vehicle includes both external and internal cargo. The internal cargo also includes an average of 7 MDK utilization experiments with associate cargo support requirements.

8.2.5 AAS 5 – Nominal Annual Cargo, Pressurized Cargo Vehicle

This DRM is a derivative of DRM AAS 4 and is based on TM 5. It assumes the AAS service provider vehicle only has capability to launch internal cargo. Therefore, all external cargo will be launched on other ISS logistic vehicles, and the AAS service

provider will deliver the resulting backlog of internal cargo. The other DRM requirements are similar to those for the internal cargo of DRM AAS 4.

8.2.6 AAS 6 – Nominal Annual Cargo, Mixed Fleet of Pressurized and Unpressurized Vehicles

This DRM is also based on the nominal annual cargo DRM, AAS 4. However, this DRM assumed two distinct vehicles: one vehicle delivering internal cargo only and the other vehicle delivering external cargo only. This case was extrapolated based the results of TM 4. The 5 flight opportunities available were split proportionately by the amount of cargo required for delivery. Therefore, 3 flight opportunities were available for a pressurized vehicle and 2 flight opportunities for an unpressurized vehicle. Because of the reduced number of flight opportunities for each vehicle, the cargo mass, volume, and associated support requirements increased for each vehicle.

8.2.7 AAS 7 – Nominal Descent Recoverable Cargo, Pressurized Cargo Vehicle

This DRM is optional and can be used in conjunction with one of the other DRMs. It defines the projected average annual backlog of descent, recoverable, internal cargo. External, recoverable cargo capability is not required. Estimates for mass and volume requirements are listed as the annual averages because the ascent portion of AAS 1 – AAS 6 DRMs, will define the flight rate for this DRM. The flight rate will also determine the amount of cargo support resources necessary to meet the annual average MDK requirement for utilization. If this DRM is selected, the AAS vehicle will not be required to return an equivalent amount of nonrecoverable, destructive descent cargo, as stated for the other DRMs. All cargo needs to be returned to the point of transfer, Kennedy Space Center (KSC), within 1 month of landing.

8.3 DRMS EXCLUDED FROM THE PERFORMANCE REQUIREMENTS DOCUMENT

The following DRMs were created throughout the course of this study; however, they were not included in the Performance Requirement Document (PRD). In general, these DRMs either did not meet the resupply requirements of the ISS or were bounded by other cases that were included in the PRD. Each of these DRMs and the rationale for not including them into the final PRD are discussed below and shown in Table 8-8.

Table 8-8. AAS DRMs excluded from the PRD

DRM ID						
Description	Rapid Response	Passive cargo Maximum annual cargo Mixed cargo vehicle	Passive cargo Minimum annual cargo Mixed cargo vehicle	Nominal annual cargo Unpressurized cargo vehicle	Increased Utilization Mixed cargo vehicle	Nominal descent Nonrecoverable cargo Pressurized cargo vehicle
Cargo Type	Systems - passive cargo	Systems and Utilization passive cargo	Systems and Utilization passive cargo	Systems and Utilization	Systems and Utilization	Systems and Utilization passive cargo
Cargo Hazards	Fluids Chemicals	Fluids Stored Energy Biologicals Chemicals Combustibles Fragiles	Fluids Stored Energy Biologicals Chemicals Combustibles Fragiles	Fluids Stored Energy Chemicals	Fluids Stored Energy Biologicals Chemicals Combustibles Fragiles	Fluids Stored Energy Biologicals Chemicals Combustibles Fragiles
Carrier Type	Pressurized	Mixed	Mixed	Unpressurized	Mixed	Mixed
Total Mass, kg (cargo and accommodations)	XXXX	Internal - 3460 External -1260	Internal - 2830 External - 1470	External - 3940	Internal - 2880 External - 1270	Internal - 10550 annual avg External - 2300 annual avg
Total Volume (cargo and accommodations) Internal: CTBE / MDK External: ft^3 / apprx. # of FRAM sites	XXXX	Internal - 205 / N/A External - 70 / 4	Internal - 170 / N/A External - 80 / 4	External - 220 / 11	Internal - 170 / 16 External - 70 / 4	Internal - 620 annual avg External - 130 annual avg
ISS Transfer Method	Internal - IVA External - EVR	Internal - IVA External - EVR	Internal - IVA External - EVR	External - EVR	Internal - IVA External - EVR	Internal - IVA External - EVR
ISS Attach period	XXXX	Min ~ 10 days Max ~ 35 days	Min ~ 9 days Max ~ 21 days	Min ~ 5 days Max ~ 35 days	Min ~ 8 days Max ~ 35 days	Attach period included as part of ascent DRM
Cargo Support Requirements						
Ground	N/A	N/A	N/A	N/A	Power - 1.6 kW avg. Cooling - 1.6 kW avg. Data - 150 Kbps	N/A
Launch Pad	N/A	Late Access 25% CTBE until L-88 hrs	Late Access 25% CTBE until L-88 hrs	N/A	Power - 1.6 kW avg. Cooling - 1.6 kW avg. Data - 150 Kbps Late Access MDK until L-19.5 hrs 25% CTBE until L-88 hrs	N/A
Ascent/Pre-transfer	N/A	N/A	N/A	N/A	Power - 1.6 kW avg. Cooling - 1.6 kW avg. Data - 150 Kbps	N/A
Attached to ISS	N/A	N/A	N/A	N/A	Power - 1.6 kW avg. Cooling - 1.6 kW avg. Data - 150 Kbps	N/A
Post Transfer (down cargo)	N/A	N/A	N/A	N/A	N/A	N/A
Post landing (down cargo)	N/A	N/A	N/A	N/A	N/A	N/A
Cargo Qualification Limits	**Internal** Load Factors N(x) +/- 9.0 g N(y) +/- 11.6 g N(z) +/- 9.9 g Thermal 18.3 to 26.7 C **External** Load Factors N(x) +/- 10.0 g N(y) +/- 2.5 g N(z) +/- 2.5 g Thermal -43 to 71 C	**Internal** Load Factors N(x) +/- 9.0 g N(y) +/- 11.6 g N(z) +/- 9.9 g Thermal 18.3 to 26.7 C **External** Load Factors N(x) +/- 10.0 g N(y) +/- 2.5 g N(z) +/- 2.5 g Thermal -43 to 71 C	**Internal** Load Factors N(x) +/- 9.0 g N(y) +/- 11.6 g N(z) +/- 9.9 g Thermal 18.3 to 26.7 C **External** Load Factors N(x) +/- 10.0 g N(y) +/- 2.5 g N(z) +/- 2.5 g Thermal -43 to 71 C	**External** Load Factors N(x) +/- 10.0 g N(y) +/- 2.5 g N(z) +/- 2.5 g Thermal -43 to 71 C	**Pressurized** Load Factors N(x) +/- 9.0 g N(y) +/- 11.6 g N(z) +/- 9.9 g Thermal 20 to 26.7 C **Unpressurized** Load Factors N(x) +/- 10.0 g N(y) +/- 2.5 g N(z) +/- 2.5 g Thermal -43 to 71 C	N/A
Response Period						
Avail. at transfer location	under review	L - 1 month	L - 1 month	L - 1 month	L - 1 month	N/A
Cargo manifest defined	under review	L - 4 months	L - 4 months	L - 4 months	L - 4 months	N/A
Cargo Transfer Location	KSC	KSC	KSC	KSC	KSC	N/A
Cargo Return Location	N/A	N/A	N/A	N/A	N/A	N/A
Flights per Year	N/A	5	2	3	5	Flight rate determined by ascent DRM

8.3.1 Rapid Response

During the initial phase of this study as defined by the Statement of Work (SOW), the team reviewed the ISS need for a rapid response vehicle and started developing a logic tree to define the response time as shown in Figure 8-1. The failures were broadly categorized by the response period of the resupply vehicle.

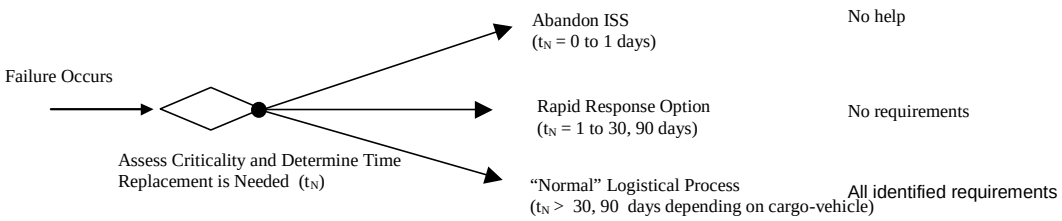

Figure 8-1. Rapid response logic tree

Rapid response was defined as the timeframe between catastrophic failures resulting in immediate crew abandonment of the ISS and the delivery of cargo during a nominal logistics mission. With the currently defined vehicle traffic (4 shuttle flights, 4 Progress vehicles, 2 HTV, and 1 ATV per year), and assuming approximately equal spacing of launches, this provides a resupply opportunity about every 30 days. Therefore, the rapid response period was defined as 1 to 30 days. However, no credible operational failures were identified that would require a rapid response mission after ISS assembly complete and no Utilization failures were identified as requiring a rapid response capability. Failure modes requiring crew abandonment after ISS assembly complete (fire, loss of pressure) would occur too quickly to benefit from a rapid response vehicle and other non-catastrophic failures would utilize pre-positioned on-board spares, cannibalization techniques, and the inherent redundancies of the ISS systems to preclude the need for a rapid response vehicle. Therefore, with no ISS requirement for a rapid response mission, this DRM was eliminated from further consideration.

However, this conclusion does not eliminate the desire for improved processes to shorten response times for the nominal logistics flow to increase late manifesting flexibility to accommodate system failures and timely delivery of Utilization cargo.

8.3.2 Passive Cargo, Maximum Annual Cargo, Mixed Cargo Vehicle

This DRM is similar to DRM AAS 2; however, it assumes only passive cargo will be delivered by the AAS vehicle. Since the only change in this DRM was the amount of powered Payload Middeck lockers, the results from TM 3 were still considered valid. It was initially believed that it would be a manifesting issue for the ISS Program to deliver all of the powered Middeck lockers on the shuttle and re-manifest the passive cargo that was displaced on the AAS vehicle. However, after further investigation and discussion with the ISS Payloads Office, it was determined that the capabilities of the shuttle were insufficient to deliver the number of powered Middeck lockers requested by the ISS Payloads Office. Therefore, to meet the ISS cargo resupply requirements, the AAS vehicle had to deliver powered Middeck lockers. Since this DRM did not meet all of the ISS resupply requirements, it was excluded from the PRD.

8.3.3 Passive Cargo, Minimum Annual Cargo, Mixed Cargo Vehicle

This case is identical to the previous one for the AAS vehicle to deliver passive cargo, except it was based on DRM AAS 3. This case was also excluded from the PRD

because it did not meet the ISS resupply requirements for powered Middeck lockers for Payloads.

8.3.4 Nominal Annual Cargo, Unpressurized Cargo Vehicle

This DRM is a derivative of DRM AAS 4 and is based on TM 6. It assumes the AAS service provider vehicle only has capability to launch external cargo. Therefore, all internal cargo will be launched on other ISS logistic vehicles, and the AAS service provider will deliver the resulting backlog of external cargo. However, the results of the traffic model showed a significant backlog of pressurized cargo to deliver and a significant backlog of unpressurized cargo for return compared to the other cases. The delivery backlog existed in the baseline case, TM 1, and without a pressurized AAS vehicle, this backlog remained. Because the AAS vehicle was capable of delivering the external cargo, all of the shuttle flights were changed to pressurized only flights to deliver the internal cargo. Therefore, there were no accommodations to return recoverable external cargo, and thus, the significant backlog of external cargo for return. Since this DRM resulted in significant backlogs of cargo compared to the other cases, it did not meet the ISS resupply requirements, and therefore, was excluded from the PRD.

8.3.5 Increased Utilization, Mixed Cargo Vehicle

Based on current statistical analysis by the ISS Payloads Office, the most constraining resource is the total upmass capability available to Payloads after systems requirements have been met. The second most constraining resource is available powered Middeck lockers. Therefore, a DRM was created to eliminate transportation resources as the most constraining factor for Payloads. The Payload Office response to this question was to increase the total Payload upmass requirement by 30 percent and provide a total of 120 powered Middeck lockers per year. The 30 percent increase was added to the Traffic Model analysis to create TM 8 to develop the AAS launch mass requirement for this scenario. The powered Middeck locker requirement was subtracted from the current capability for a shortfall of 80 powered Middeck lockers to by delivered by the AAS system.

However, the requirements for this vehicle were bounded by DRM AAS 3 (Minimum annual cargo, Mixed cargo vehicle). The only difference was the flight rate of 2 vehicles per year for DRM AAS 3 and 5 vehicles per year for this DRM. Because this DRM was bounded by another case, it was not included as part of the final PRD.

8.3.6 Nominal Descent Nonrecoverable Cargo, Mixed Cargo Vehicle

The initial idea was to keep the descent DRMs separate from the ascent DRMs to allow the most flexibility in developing operational concepts for the AAS. However, due to the relatively small impacts for a vehicle to include the capability to handle nonrecoverable cargo, this DRM was deleted and this capability was included as part of the ascent DRMs.

9.0 OTHER REQUIREMENTS AND LIMITATIONS

The AAS shall comply with the requirements described in SSP 50235, Interface Definition Document for International Space Station Visiting Vehicles, and the additional requirements listed herein. In case of a conflict with SSP 50235 and this document, SSP 50235 shall take precedence.

Rationale: This document is not intended to and does not serve as the set of detailed design and functional requirements necessary to develop an AAS Vehicle System. SSP 50235, Interface Definition Document for International Space Station Visiting Vehicles, is the ISSPs top-level document from which the AAS vehicle unique specifications will be built.

9.1 COORDINATE SYSTEM

The Space Station coordinate system is defined in SSP 30219, Space Station Reference Coordinate Systems. This coordinate system should be used when referencing the ISS. See Appendix I for a summary diagram.

Rationale: The Space Station Reference Coordinate System is the ISSPs accepted system. The AAS vehicle developers are encouraged to use this system to communicate rendezvous, docking, undocking, and departure flight plans in order to communicate more effectively. Also, internal or external position marking labels to be read by the ISS crew will be required to follow this system.

9.2 MATING LOCATIONS

The AAS vehicle shall only mate at ISS locations approved by the ISS Program. The following ISS locations provide possible nominal attach points for an AAS vehicle on the USOS. These attach points, except the element trunnion pins, are documented in SSP 50504, ISS Configuration Document.

Each of these locations requires the AAS vehicle to interface with a CBM for berthing to the ISS.

- Node 2 Nadir
- Node 1 Port

Rationale: These are the only two available locations for an AAS Vehicle designed to berth with a CBM.

Each of these locations requires the AAS vehicle to interface with the APAS for docking to the ISS.

- PMA 2 on Node 2 Forward
- PMA 3 on Node 3 Nadir

Rationale: These are the only two available locations for an AAS vehicle designed to dock to an ISS PMA.

For AAS elements delivering only external cargo, the following list of attach sites may be used in addition to those listed above. However, the ISS Program has not performed analysis to define acceptable vehicle envelopes, approach corridors, berthing clearances, availability, etc.

- Power Data Grapple Fixture
- Payload attach site
- Unpressurized logistics carrier attach site
- Element trunnion pin

Rationale: These attach sites provide alternatives to CBMs or APAS but are preliminary and require further analysis by the ISSP to define acceptable vehicle envelopes, approach corridors, berthing clearances, availability, etc.

9.2.1 Common Berthing Mechanism Berthing Requirements

Any AAS vehicle that is to be berthed with a CBM will be grappled by the Space Station Remote Manipulator System (SSRMS) and placed within the capture envelope with the proper capture conditions for that particular CBM interface. The AAS vehicle intending to berth to a CBM shall be equipped with the passive half of the CBM, or equivalent mechanism to interface with the active CBM. Pressurized vehicles equipped with this mechanism shall comply with the requirements documented in SSP 41004, Common Berthing Mechanism to Pressurized Elements Interface Control Document.

The AAS vehicle shall also be equipped with a SSRMS compatible Grapple Fixture to permit robotics operation. The AAS vehicle shall comply with the requirements in NSTS 21000-IDD-ISS, Section 14 and NSTS 07700, System Description and Data Design, Vol. XIX, Appendix 8, if a FRGF or a Electrical Flight Grapple Fixture (EFGF) is used. If the AAS employs a PDGF, then the design shall comply with the requirements in SSP 42004, Mobile Servicing System to User (Generic) Interface Control Document, and SSP 42003, Space Station Manned Base (SSMB) to Mobile Servicing System (MSS) ICD.

If the AAS vehicle requires any resources, such as electrical power, coolant fluid, or data, interface requirements for Node 2 Nadir ports are documented in SSP 42007, United States On-orbit Segment to Italian Mini Pressurized Logistics Module Interface Control Document. Interface requirements for Node 1 Port are documented in SSP 41142, Space Station Program Node Elements to Cupola Element Interface Control Document, Part 1. The electrical systems of an AAS vehicle interfacing with the USOS shall be compatible with 120 Vdc power, according to SSP 52051, User Electric Power Specifications and Standards. A high-level description of the resources used by the Multi-Purpose Logistics Module (MPLM) berthed to Node 2 Nadir include three kW of

power, low temperature water coolant supplied from 38 to 43°F, atmosphere exchange and a MIL-STD-1553B Command and Data Handling interface.

Rationale: The CBM was not designed for docking operations or loads. Therefore, it was necessary that the AAS vehicle intending to mate to a CBM location would be captured by the SSRMS and then berthed to the CBM port. The AAS vehicle would need to be equipped with the passive half of the CBM or equivalent mechanism and some form of a grapple fixture acceptable to the ISSP. The references provided herein detail interface requirements for CBMs, various types of Grapple Fixtures, the SSRMS, and capabilities of Node 1 Port and Node 2 Nadir. Node 1 Port also has some potential clearance issues with the Thermal Control System (TCS) radiators that will limit the overall length of the AAS vehicle. The relative size of the AAS vehicle can be approximately the same as the MPLM as can be seen in Figure 9-1 with the MPLM attached to Node 1 Port.

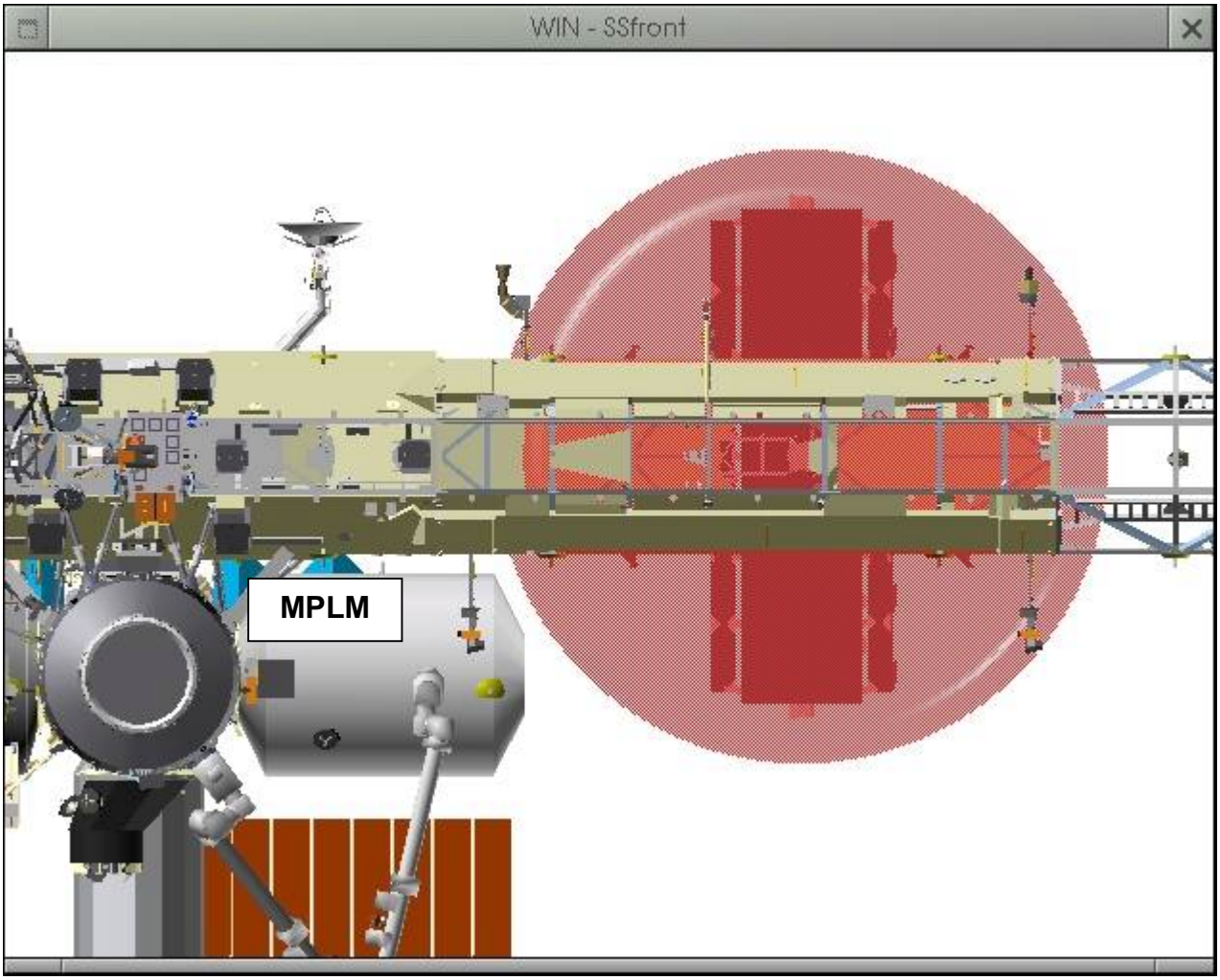

Figure 9-1. Node 1 Port and TCS radiator clearance (using MPLM)

9.2.2 Androgynous Peripheral Attachment System Docking Requirements

If the AAS vehicle is designed to dock to the ISS, the AAS vehicle will always be the active element, and the ISS will be passive. The AAS vehicle shall provide the necessary guidance, navigation, and trajectory control system for close proximity operations and incorporate the active part of an Androgynous Peripheral Attachment System (APAS). Interfaces for the docking ports are described in NSTS 21000-IDD-ISS, Interface Definition Document for the International Space Station.

Detailed information about the APAS configuration, which the Space Shuttle Orbiter uses for ISS missions, can be found in JSC-26938, Procurement Specification for the Androgynous Peripheral Docking System for ISS Missions.

Rationale: This provides a brief operational requirement for the AAS vehicle intending to dock to the ISS with an APAS. It also directs the AAS vehicle developer to more detailed interface requirements for the APAS.

9.2.3 Power Data Grapple Fixture

Typically, the PDGF provides a mechanical interface between the SSRMS Latching End Effector (LEE) and a cargo element. Some of these also serve as base points for the SSRMS. The PDGF provides a means by which electrical power, data, and video may be transmitted between the LEE and the cargo element during mechanical interfacing. The PDGF design includes a combination of a FRGF and an Umbilical Mechanism Assembly (UMA) connector for power. Some of these PDGFs may serve as mating locations for the AAS orbital transfer element. The AAS will require a grapple fixture to be captured by the SSRMS as well as a LEE or equivalent mechanism to interface with a PDGF on the ISS. Envelopes for Robotic Access and other information on the PDGF can be found in SSP 50228, Volume 15, Space Station Program Configuration and Assembly Standard Interface Control Document; Grapple Fixture Location ICD, NSTS 07700, Volume XIV, Appendix 8, Space Shuttle System Payload Accommodations Handbook; Payload Deployment and Retrieval System; and NSTS 1000-IDD-ISS, International Space Station Interface Definition Document. See Figure 9-2 for an illustration of the PDGF.

Rationale: One method of attaching the AAS orbital transfer vehicle to the ISS makes use of the existing SSRMS Latching End Effector (LEE) mechanism that is currently in use on the ISS. The SSRMS can be used to capture the AAS orbital transfer vehicle and then berth the vehicle onto one of the available PDGF sites located at various locations on the ISS structure. The actual PDGF site to be used will have to be agreed upon by the ISS Program and the AAS service provider.

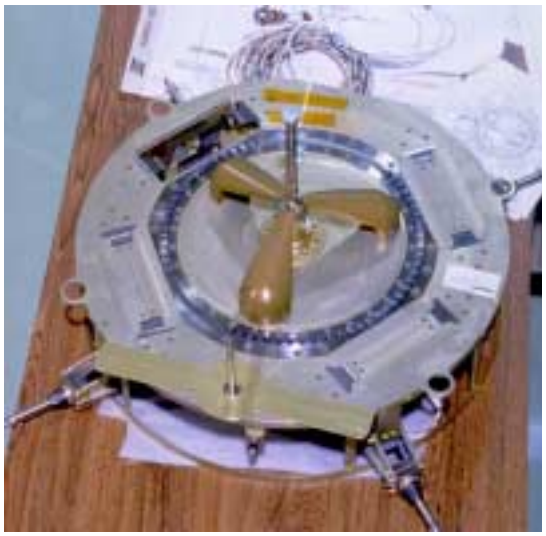

Figure 9-2. Power Data Grapple Fixture

9.2.4 Payload Attach Site (PAS) and Unpressurized Logistics Carrier Attach System (ULCAS)

The ISS provides installation and operational support of science and technology experiments and associated support equipment at four external attach sites on the Integrated Truss Assembly (ITA) S3 (Starboard side) and two external attach sites on the Integrated Truss Segment (ITS) P3 (Port side). The four S3 sites have been designated as primary Payload Attach Sites (PASs), and the two P3 sites have been designated as Unpressurized Logistics Carrier Attach Sites (ULCASs). These sites will possibly be available for attachment of the AAS orbital vehicle element. These sites support equipment pre-integrated onto a carrier capable of interfacing directly to a PAS/ULCAS. All six sites support structural loads, power, and data. The PAS/ULCAS passive and active half descriptions, power, and data interfaces can be found in SSP 42131, Integrated Truss Segments P3 and S3 to Attached Payloads and Unpressurized Cargo Carriers (UCC) Standard Interface Control Document. Other data and information on the Active and Passive halves of the PAS/ULCAS can be found in SSP 57003, Attached Payload Interface Requirements Document, and SSP 57004, Attached Payload Hardware ICD Template. See Figure 9-3 and Figure 9-4 for an illustration of the active and passive halves of the PAS/ULCAS, as well as the PAS operational envelope.

Rationale: Although these attach sites are allocated for Payload EXPRESS Pallets and unpressurized logistics carriers, they can potentially be used as a mating location for an AAS vehicle. The AAS vehicle will be captured by the SSRMS and then berthed to an available attach site. The actual PAS/UCCAS sites to be used will have to be agreed upon by the ISS program and the AAS service provider.

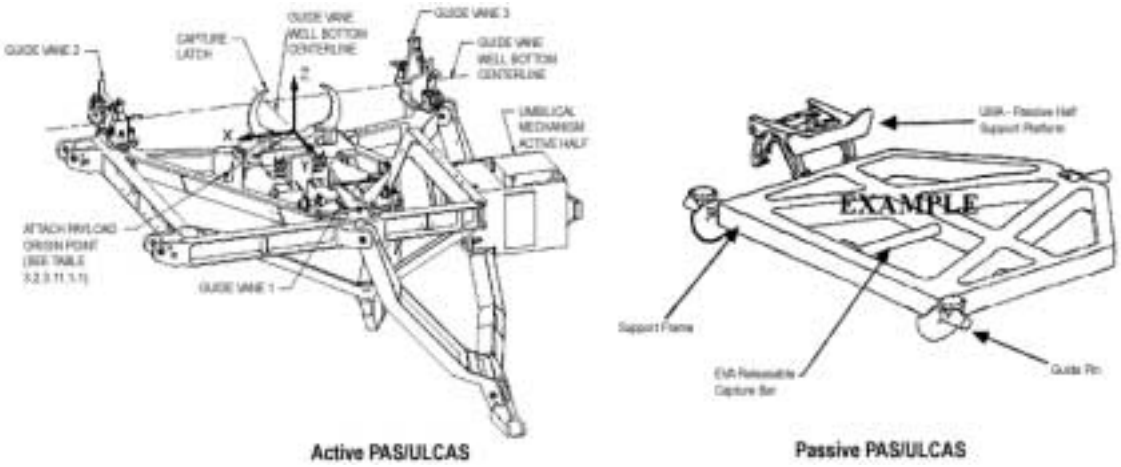

Figure 9-3. Active and passive PAS/ULCAS assemblies

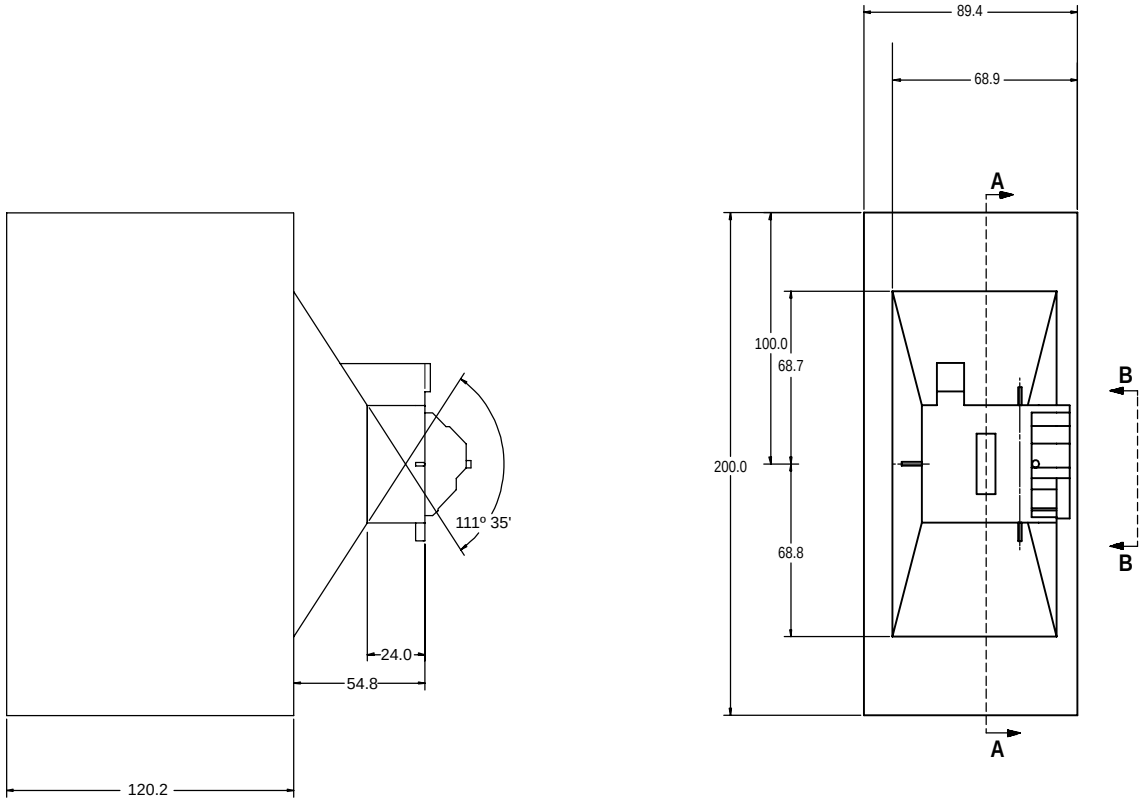

Figure 9-4. PAS operational envelope (dimension in inches)

9.2.5 Element Trunnions

Each Space Station element is equipped with trunnions used for transport of the element to the ISS via the shuttle. Some of these trunnions have been modified and equipped with the Enhanced Universal Trunnion Attachment System (EUTAS). This system allows hardware to be mounted on the trunnion pins. Therefore, the AAS service provider can develop a unique berthing mechanism that incorporates the active

portion of the EUTAS to mate the AAS orbital element to the ISS after SSRMS capture. Additional information on the available trunnions, which have been outfitted for attachment capability (location, size, etc.), can be found in the individual Space Station Element ICDs. For information regarding the Active and Passive EUTAS systems, see D684-11232-01, Certification and Acceptance Requirements Document – EUTAS Active and D684-11345-01, Certification and Acceptance Requirements Document – EUTAS Passive Kit. See Figure 9-5 for an illustration of the active and passive EUTAS components and Figure 9-6 for the Element Trunnion Locations.

Rationale: The SSRMS LEE could be used to berth the AAS orbital transfer vehicle to the ISS via one of several mutually agreed upon Trunnion attach sites. Specific element trunnions would require structural analyses as well as analyses of location and clearance issues prior to actual use. Also, the actual trunnion site to be used would have to be agreed upon by the ISS Program and the AAS service provider.

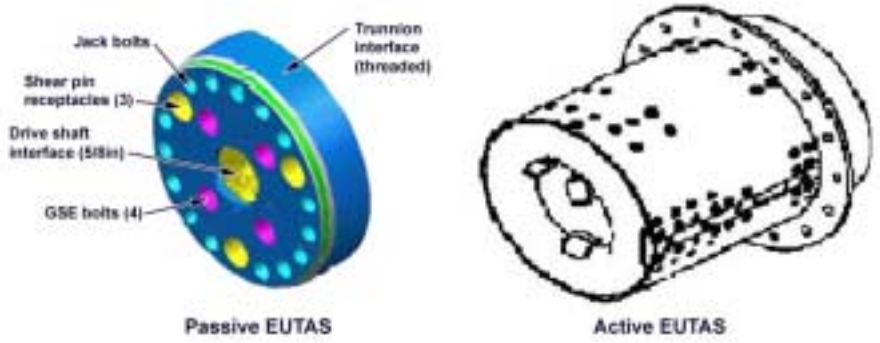

Figure 9-5. Active and passive EUTAS

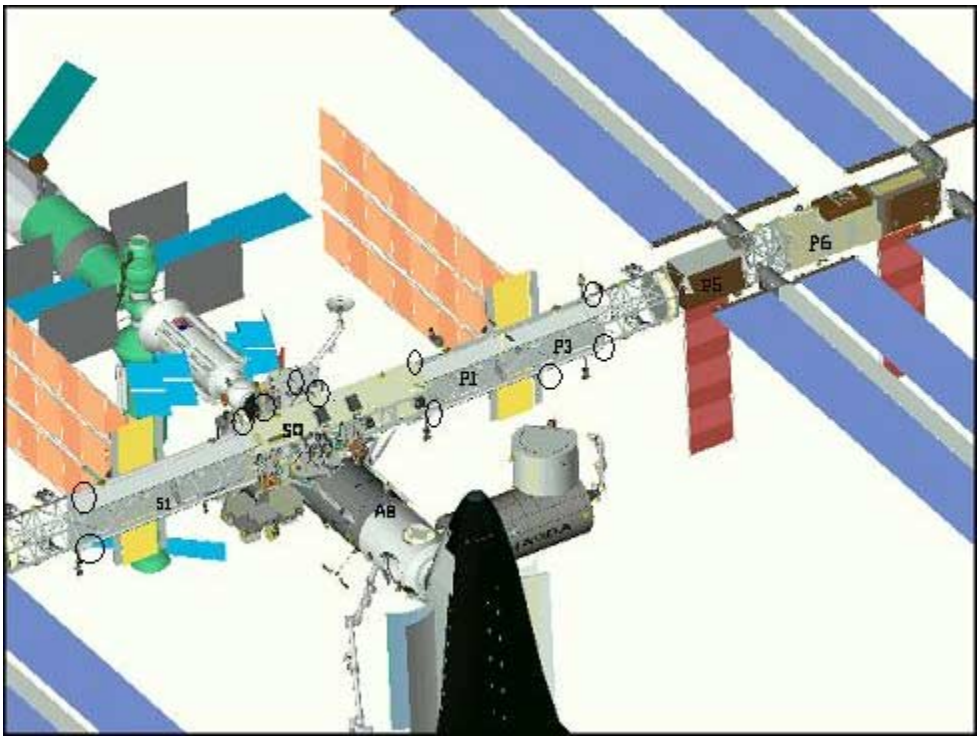

Figure 9-6. Element trunnion locations (circled)

9.3 CARGO RESTRAINTS

Cargo to be delivered or returned by the AAS vehicle will be restrained in the following manner.

9.3.1 Internal Cargo Restraints

9.3.1.1 Passive Cargo

Typically, passive cargo that requires an internal pressurized environment, or which is intended to be stowed within pressurized modules of the ISS, will be packed in soft-good bags. Figure 9-7 depicts the five different types of CTBs, and Figure 9-8 depicts the two types of M-bags. M-bags are used for large oversized items or to restrain CTBs on the resupply stowage platform system. The maximum weight of cargo items allowed for each bag is listed below:

Half size CTB	30 lbs
Full size CTB	60 lbs
Double size CTB	120 lbs
Triple size CTB	180 lbs
M01 bag	300 lbs
M02 bag	200 lbs

The AAS service provider will be responsible for designing a system to restrain these bags within the AAS vehicle. This system will be compatible with the standard set of ISS tools, or the AAS service provider will be responsible for supplying any unique tools to interface with the restraint system.

Rationale: Cargo Transfer Bags are the ISSP fundamental stowage accommodation and cargo restraint. Any other size bag or stowage accommodation will not efficiently integrate with the ISS on-orbit stowage volumes.

For more details regarding the cargo restraints described above, and the ISS approach to stowage accommodations, the following documents may be referenced:

JSC-39233	Interface Definition Document for the International Space Station Cargo Transfer Bag (CTB)
JSC-28169	Interface Control Document for the International Space Station Resupply Stowage Platform 1 Stowage System to Cargo Providers
SSP 50467	ISS Cargo Stowage Technical Manual – Pressurized Volumes

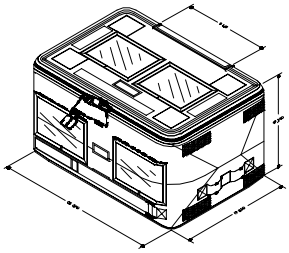

Half Size CTB

9.75” X 9.75” X 16.75”

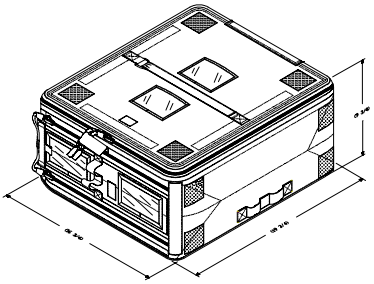

Full Size CTB without Windows

9.75” X 19.75” X 16.75”

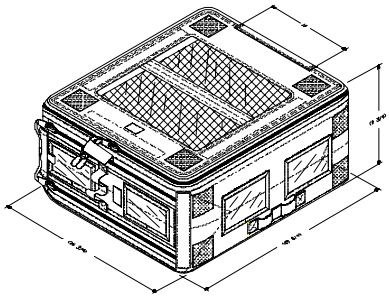

Full Size CTB with Windows

9.75” X 19.75” X 16.75”

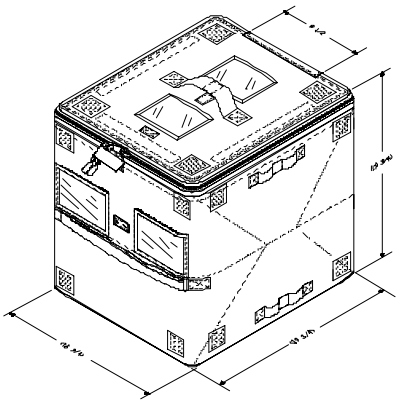

Double Size CTB

19.75” X 19.75” X 16.75”

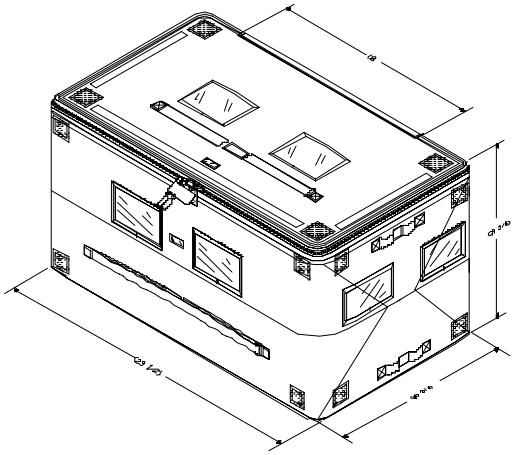

Triple Size CTB

19.75” X 16.75” X 29.5”

Figure 9-7. Cargo transfer bags

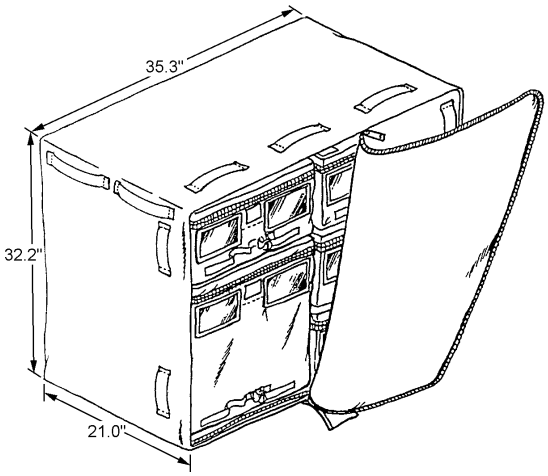

M01 Bag (illustrated with ONE Double and FOUR Full Cargo Transfer Bags)

35.3” x 21” x 32.2”

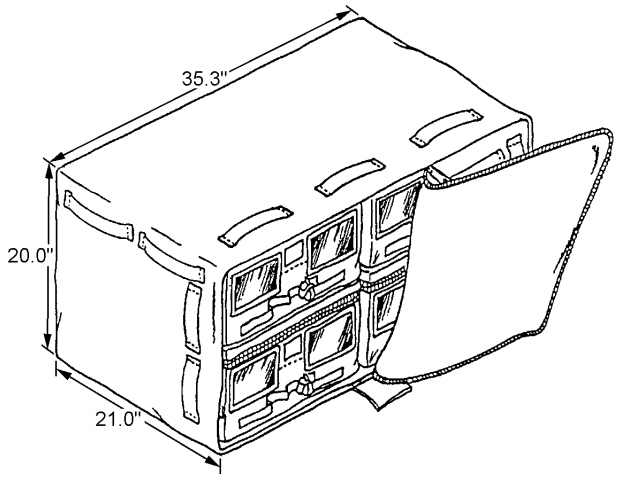

M02 Bag (illustrated with FOUR Full Cargo Transfer Bags)

35.3” x 21” x 20”

Figure 9-8. M-bags

Limited unique cargo items that do not fit into these standard accommodations will require specialized FSE. In these instances, a unique interface, jointly agreed to by the AAS developer and National Aeronautics Space Administration (NASA) will be required and documented in an ICD. These unique instances are considered outside the scope of these performance requirements.

Rationale: Infrequent instances require unique FSE to be designed to transport off nominal shaped cargo. The AAS vehicle developer should be advised that such instances will occur.

9.3.1.2 Active Cargo

Active cargo that is stowed in pressurized modules will typically be flown in a similar manner as when it is flown in the Space Shuttle Middeck. Interfaces and requirements for Space Shuttle Middeck Payloads are documented in NSTS 21000-IDD-MDK, Shuttle Interface Definition Document for Middeck Payloads. Figure 9-9 depicts a Standard Middeck Locker. The Space Shuttle Middeck locker structure has a modular arrangement that allows double, triple, and quad lockers to also be used. The ISS Program will provide these lockers and contents. The AAS service provider will provide all equipment for support and handling.

Rationale: Active Utilization experiments have flown in the Space Shuttle for years and Payload Developers have designed their fundamental interfaces around the Space Shuttle Middeck accommodations. Consequently, ISS EXPRESS racks mimic Space Shuttle Middeck interfaces and will be on-orbit to receive the Middeck Locker experiments delivered by the AAS vehicle. AAS vehicles that do not provide similar interfaces will not be able to effectively deliver active cargo.

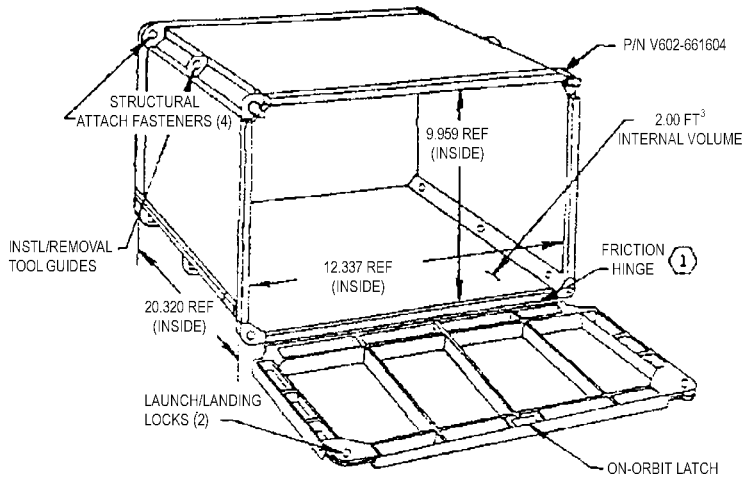

Figure 9-9. Standard Middeck modular locker

9.3.2 External Cargo Restraints

Typically external cargo will be provided to the AAS service provider attached to an adapter plate and the active half of a FRAM, as shown in Figure 9-10. Interfaces and requirements for the FRAM are documented in D684-96059-01, Standard Interface Document (SIDD) for the FRAM.

The AAS service provider will be responsible for providing the passive FRAM hardware, or equivalent mechanism to restrain the external cargo, on the AAS vehicle. This hardware will remain on the AAS vehicle once the cargo item is removed.

Limited unique cargo items that do not fit in these standard accommodations will require specialized FSE. In these instances, a unique interface jointly agreed to by the AAS developer and NASA, will be required and documented in an ICD. The unique instances are considered outside the scope of these performance requirements.

Rationale: FRAMs are the ISSP fundamental stowage accommodation and cargo restraint for external cargo. Any other stowage accommodation will not effectively integrate with the ISS on-orbit stowage locations.

9.4 CARGO ACCESS

9.4.1 Internal Cargo Access

The AAS orbital transfer element internal volume shall be compatible with the ISS internal environments documented in SSP 41000, ISS Systems Specification, including but not limited to, Environmental Control and Life Support. All hardware that will have a crew interface shall be designed in accordance with SSP 50005, International Space Station Flight Crew Integration Standard.

Rationale: The internal pressurized volume of the AAS vehicle must be compatible with the ISS internal volume in order to efficiently manage ISS consumables and to minimize potential hazards. The AAS vehicle internal volume must also follow Crew Interface Standards in order to be efficiently and safely operated.

9.4.2 External Cargo Access

External cargo shall be EVR accessible and removable from the AAS orbital transfer element during the attached phase. Figure 9-10 shows both the typical stack up of ORU and FRAM components as mounted on an external carrier.

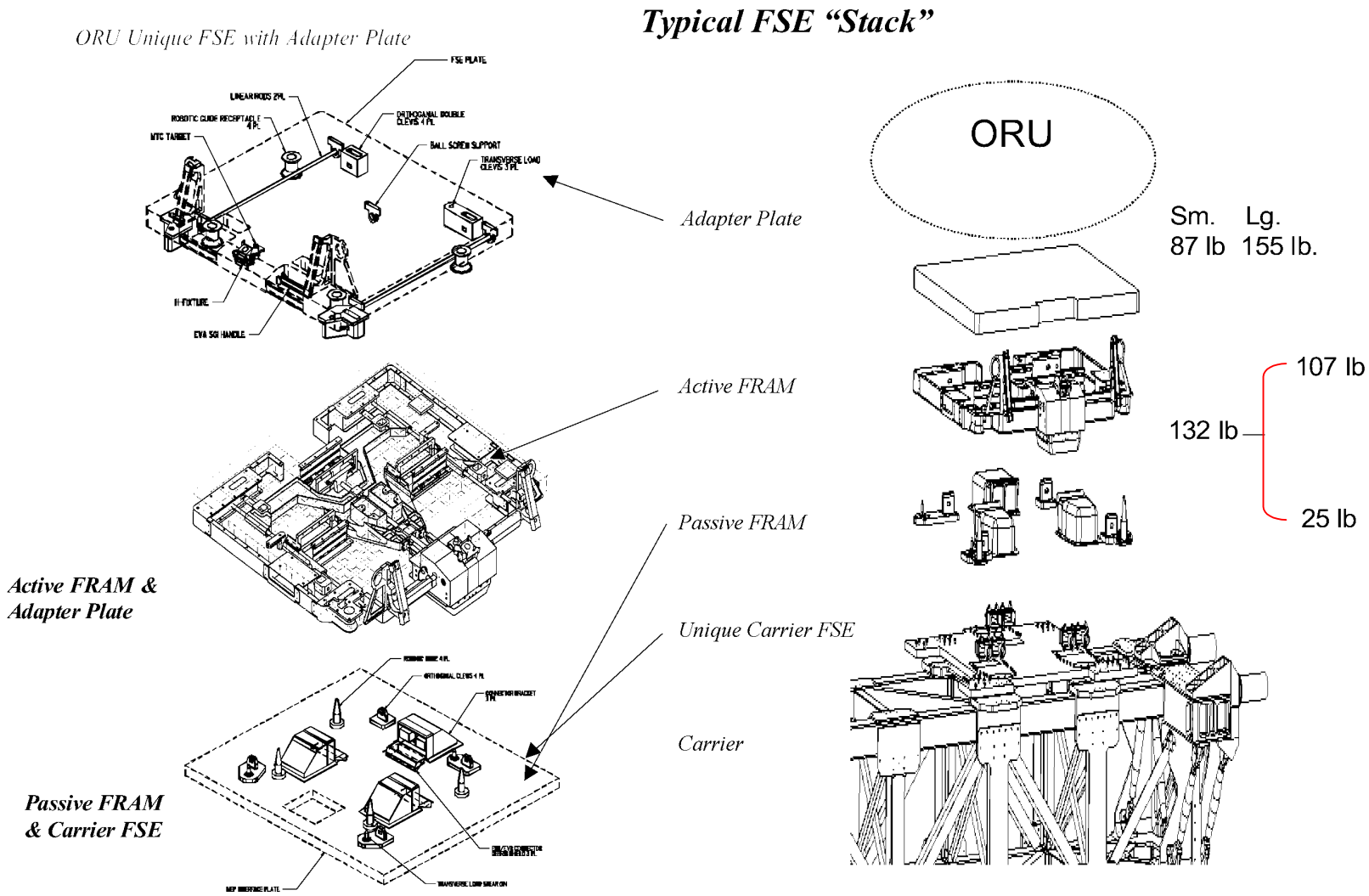

Figure 9-10. Active FRAM and passive FRAM assemblies

To meet EVR and contingency EVA requirements, access envelopes for FRAM-mounted hardware are indicated in Figure 9-11 and defined in SSP 42004, Mobile Servicing System (MSS) to User (Generic) ICD, D683-90659-01, Small Adapter Plate Interface Definition Document, and D684-10822-01, Standard Interface Definition Document (SIDD) for the Flight Releasable Attachment Mechanism (FRAM). In addition, the AAS orbital transfer element will be compatible with contingency EVA operations defined in SSP 30256, EVA Standard ICD, and SSP 50005, ISS Flight Crew Integration Standard.

Rationale: FRAM is the common external cargo item attachment mechanism interface between the cargo item and the external carrier. It is being used in order to maintain the capability to move cargo items from one carrier location to another without compromising power and data gathering possibly being required by the cargo item. This common FRAM mechanism also acts as an interface that can provide power for heating cargo items via either heater pads directly mounted onto the FRAM adapter plate's upper surface, or by directly powering the Flight Support Equipment or the cargo item itself through the FRAM active to passive connector interface. The FRAM is capable of using either 120V or 28V power (28V or 120V while attached to the vehicle and 120V as supplied by the ISS. Another useful feature of the FRAM is its robotic capability. For example, the SSRMS can grapple the FRAM carrying its cargo item by attaching to the H-fixture on the FRAM structure. These features make the FRAM the most EVR and EVA compatible (EVA in contingency cases) method for holding hardware/cargo items being transferred to the ISS.

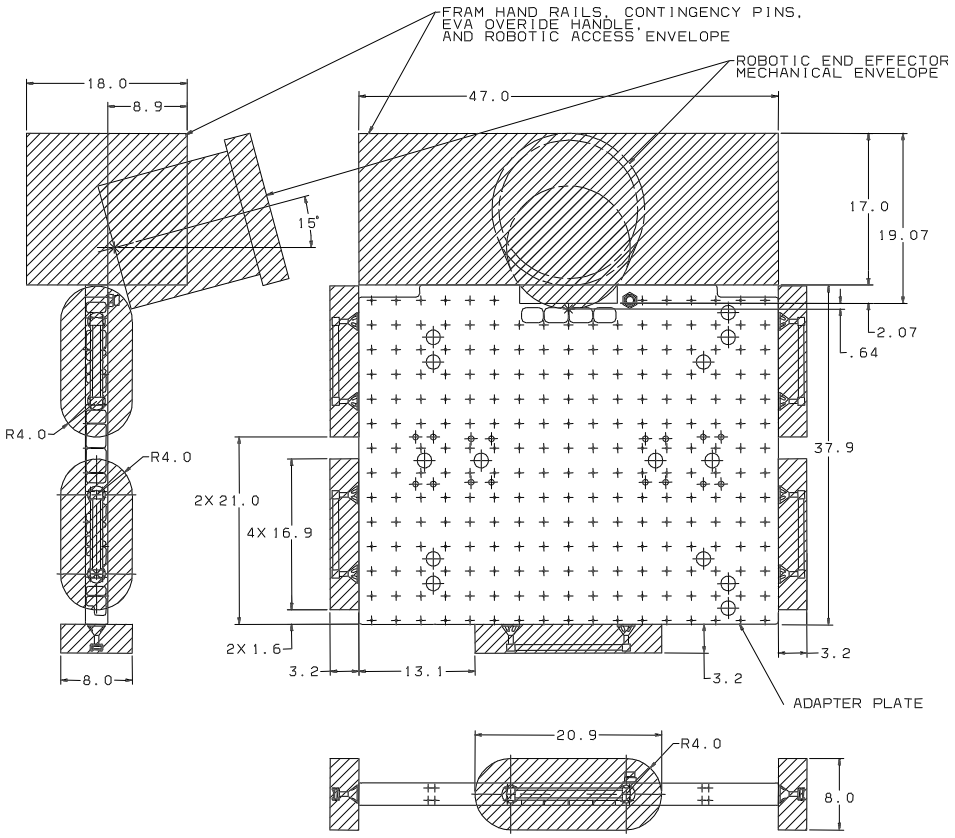

Figure 9-11. Small adapter plate stay-out zone drawing with horizontal mounted handrails

9.5 SAFETY

The AAS shall comply with all ISS safety requirements per SSP 50021, Safety Requirements Document, as well as the Human Engineering safety requirements contained in SSP 50005, ISS Flight Crew Integration Standard.

Rationale: Standard safety requirements must be considered from concept development forward.

10.0 OBSERVATIONS

The following are observations developed during the course of this effort. They are in no particular order or priority.

10.1 A system that is optimized at the nominal mixed vehicle DRM but could remain viable at the minimum DRM and surge to the Maximum DRM would appear to be the most useful. It covers the potential ISS backlog while allowing the flexibility to handle most of the conditions covered in the sensitivity analysis.

10.2 The team went through several interesting and necessary evolutionary stages during the performance of the study. Initially, the prevailing position was, “Tell me what the AAS will do, and I will tell you how I will use it.” The team then went through the stage of wanting the AAS to do everything for all potential needs, regardless of cost. The end stage was to define requirements to satisfy the majority of needs, avoiding the ends of the curve that would drive up costs but have little real utility. Similarly, the team evolved from identifying AAS operational parameters (e.g., must be able to support x launch attempts per day) to specifying service requirements (e.g., deliver on the date required by the ISS program).

10.3 It would be possible to customize a cargo set to minimize the difficulties (mass, volume, ascent loads, etc.) for a specific AAS developer but that would also minimize utility to the ISS. Similarly, the ISS could use almost any system capacity developed but it would have to be at a cost and reliability better than the existing systems.

10.4 Reliability was not examined. In the final decision to utilize an AAS, the reliability of the new system will have to be balanced with the risk to the station program of depending upon the system. Some interesting reliability issues:

10.4.1 Utilization cargo owners will expect a voice in the decision to use an immature system for delivery of their cargo to the ISS.

10.4.2 Would the ISS have to absorb the risk of being the first (and only?) user of a new system?

10.4.3 The international partners are absorbing the cost and risk for the infant mortality period for the HTV and ATV. Must the U.S. ISS Program do so for the AAS?

10.5 The concept of commercial utilization of the ISS along with the potential of transferring the delivery costs to the utilization community may pose interesting issues. (e.g., could the utilization community contract with the AAS for services without going through the NASA ISS program?)

10.6 This study did not uncover a driving requirement for an AAS. However, it is recognized that a safe and reliable system at the right price could have usefulness. The AAS would have to better the reliability and cost of the Shuttle, HTV, ATV, and Progress.

10.7 Vehicle sizing was a bit of a surprise, but upon review it should not have been. The lack of need for a standby rapid response capability was disturbing after having assumed one was necessary for several years. However, it would have been severe negligence to design and build a station requiring one without having it available. It is almost certain that at some point in the future management will wish for the capability, but the absolute requirements do not justify budgeting the development. Such management "I wish we could" desires are usually made without consideration of the development or operational cost. The need for a mass capacity twice that of the Progress was also a bit of a surprise. However, recognition that the AAS mass capacity is similar to that of the HTV and ATV gives assurance that all the ATV, HTV, and AAS have been sized appropriately.

10.8 The cargo matrix had a much more limited utility than originally thought. Early in the study, it was considered critical to the development of the requirements for the quick response vehicle. Analysis was to enable selection of the system items necessary for quick delivery. The vehicle would then be sized around these items. When the need for the quick response disappeared, the cargo matrix was used to categorize items and develop the representative cargo complements for the DRMs. This assures that the system is designed for the majority of the potential cargo but excludes the extreme cases that could drive up cost and complexity.

It should also be noted that, just prior to the completion of the AAS study, the ISS Program announced the delivery of its Orbital Replacement Unit Data Directory (ORUDD). This data directory can be used as a supplement to the cargo matrix provided as part of this effort and may be found on-line at http://iss-www.jsc.nasa.gov./ss/issapt/orudd/. The website is an integrated, interactive site and therefore, could not be included as part of the Reference Library supplied with this study.

10.9 Support of utilization cargo may become a significant cost factor. Utilization requirements drive cargo power, cooling, data, launch site processing, late and early access, recoverable cargo, and structure to support Middeck lockers. The benefit to the ISS program may not support the cost of this capability.

APPENDIX A
ACRONYMS

AAS	Alternate Access to Station
AMS	Alpha Magnetic Spectrometer
APAS	Androgynous Peripheral Attachment System
APDS	Androgynous Peripheral Docking System
ATA	Ammonia Tank Assembly
ATP	Authority to Proceed
ATV	Ariane Transport Vehicle
BCDU	Battery Charge/Discharge Unit
BMRRM	Bearing, Motor, Roll Ring Module
C	Centigrade
C&DH	Command and Data Handling
CAM	Centrifuge Accommodations Module
CBM	Common Berthing Mechanism
CCAFS	Cape Canaveral Air Force Station
CheCS	Crew Healthcare System
cm	centimeter(s)
CMG	Control Moment Gyroscope
COF	Columbus Operating Facility
CRV	Crew Return Vehicle
CTB	Cargo Transfer Bag
CTBE	Cargo Transfer Bag Equivalent
CTC	Cargo Transport Container
DAC	Design Analysis Cycle
DCSU	DC Switching Unit
DDCU-E-HP	DC/DC Converter Unit-External-Heat Pipe
DRM	Design Reference Mission
EFGF	Electrical Flight Grapple Fixture
ESA	European Space Agency
EUTAS	Enhanced Universal Trunnion Attachment System
EVA	Extravehicular Activity
EVR	Extravehicular Robotics
EXPRESS	Expedite the Process of Experiments to the Space Station
F	Fahrenheit
FAQ	Frequently Asked Questions
FHRC	Flex Hose Rotary Coupler
FRGF	Flight Releasable Grapple Fixture
FRAM	Flight Releasable Attachment Mechanism
FSE	Flight Support Equipment

G	Gravity
GGR&C	Generic Groundrules, Requirements and Constraints
GN&C	Guidance, Navigation, and Control
GSE	Ground Support Equipment
HP	High Pressure
HTV	H2A Transport Vehicle
ICD	Interface Control Document
IDD	Interface Definition Document
IP	International Partners
ISS	International Space Station
ISSP	International Space Station Program
ITA	Integrated Truss Assembly
ITS	Integrated Truss Segment
IVA	Intravehicular Activity
JEM	Japanese Experiment Module
JEM-EF	Japanese Experiment Module-Exposed Facility
JSC	Johnson Space Center
Kbps	Kilobits per second
Km	Kilometer
KSC	Kennedy Space Center
Ku	Frequency Sub-Band
kW	Kilowatts
lb	Pounds (avoirdupois)
lbm	Pound mass
LDU	Linear Drive Unit
LEE	Latching End Effector
LEO	Low Earth Orbit
LT	Load Test
MA	Maintenance Action
MBSU	Main Bus Switching Unit
MDK	Middeck
MLE	Middeck Locker Equivalent
M/OD	Micrometeoroid/Orbital Debris
MOD	Mission Operations Directorate
MPLM	Multi-Purpose Logistics Module
MSFC	Marshall Space Flight Center
MSS	Mobile Servicing System
MTBF	Mean Time Before Failure
MT/TUS	Mobile Transporter/Trailing Umbilical System
N_2	Nitrogen

NASA	National Aeronautics Space Administration
NH3	Ammonia
NSTS	National Space Transportation System
NTA	Nitrogen Tank Assembly
O_2	Oxygen
ORU	Orbital Replacement Unit
OTCM	ORU/Tool Change-out Mechanism
OZ	ISS Payloads Office
PAS	Payload Attach Site
PDGF	Power Data Grapple Fixture
PFCS	Pump/Flow Control Subassembly
PIA	Payload Integration Agreements
PMA	Pressurized Mating Adapter
POA	Payload and ORU Accommodation
P/R	Pitch/Roll
PRACA	Problem Reporting and Corrective Action
PRD	Performance Requirements Document
PV	Photovoltaic
RBVM	Radiator Beam Valve Module
RMS	Remote Manipulator System
RSA	Russian Space Agency
RS	Russian Segment
SASA	S-Band Antenna and Support Assembly
SB	Station Body
SGANT	Space-to-Ground Antenna
SIDD	Standard Interface Definition Document
SOW	Statement of Work
SPDM	Special Purpose Dexterous Manipulator
SPP	Science Power Platform
SSMB	Space Station Manned Base
SSP	Space Station Program (refers only to SSP document numbers)
SSPF	Space Station Payload Processing Facility
SSRMS	Space Station Remote Manipulator System
TBD	To Be Determined
TCS	Thermal Control System
TM	Traffic Model
TRRJ	Thermal Radiator Rotary Joint
UCC	Unpressurized Cargo Carrier
UCCAS	Unpressurized Cargo Carrier Attach Site
ULCAS	Unpressurized Logistics Carrier Attach System
UMA	Umbilical Mechanism Assembly

U.S.	United States
USA	United Space Alliance
USOS	United States On-orbit Segment
UTA	Utility Transfer Assembly
UTAS	Universal Trunnion Attachment System
Vdc	Volts dc (direct current)
VIPeR	Vehicle Integrated Performance and Resources
VV	Visiting Vehicle
VVIDD	Visiting Vehicle Interface Definition Document
W	Watt

APPENDIX B
ISS LOGISTICS SUPPORT DEFINITION STATEMENT OF WORK

1 INTRODUCTION

This Statement of Work (SOW) describes an approximate 3-month effort in support of the National Aeronautics and Space Administration (NASA) to assess United States (U.S.) logistics requirements for launch services options to the International Space Station (ISS), hereafter defined as Alternate Access to Station (AAS).

2 DEFINITIONS

Payload – Cargo plus its container/carrier

Cargo – Usable supplies

Heavy Payload – 4000 lbs usable cargo (Equivalent to Progress dry cargo) plus container/carrier

Light Payload – Minimum of 500 lbs usable cargo plus container/carrier

Customer Study Manager – MSFC/Alternate Access to Station Project Office

MTBF – Mean Time Before Failure

ORU – Orbital Replacement Unit

3 BACKGROUND

The ISS nominally utilizes the Space Shuttle or internationally contributed foreign launch systems to deliver cargo to the ISS. The foreign launch systems currently baselined for use for re-supply are the Russian Space Agency (RSA) Progress, the European Space Agency (ESA) Automated Transfer Vehicle (ATV), and the Japanese National Space Development Agency (NASDA) H2A Transfer Vehicle (HTV). NASA is interested in studying potential augmentation of these re-supply methods with a US capability utilizing US based providers to meet ISS needs. This augmentation is envisioned to enhance ISS operability, meet station needs, or be used in the event currently baselined delivery methods are unavailable.

3.1 Requirements Scope

Innovative practices and contractor expertise should be employed in the development of station needs and enhancement of operability. The development of ISS logistics support requirements for AAS encompasses four major parts. These parts are the same for both the heavy and light payload missions. The parts are defined as follows:

3.2 Part 1 – Determination of Mission Needs

The re-supply services consist of two payload types: 1) Progress equivalent (heavy), and, 2) unplanned small package/supply (light). The light payload mission shall have the capability to launch in a rapid response or emergency situation.

3.2.1 The contractor shall assess the ISS Logistics Database and other U.S. ISS experiment users to determine reference cargos for AAS missions. The assessment should include identification of all ORUs, evaluation of ORUs and other cargo that are dimensionally and mass compatible with a Mid-deck Locker Equivalent (MLE), crew support items such as food and clothing, other consumable products, other dry mass support items, and other wet mass items. Requirements should be identified to support a crew of 3 with and alternatively a crew of 7. The cargo assessment should also include U.S. experiment providers from Code U and the MSFC Microgravity Research Programs Office including the Office for Space Product Development for commercial experiment and research support items and return samples.

3.2.2 The cargos shall be identified in useful increments (mass/volume). The largest increment will be the heavy payload defined earlier and the smallest increment (light payload) will be based upon rapid response to a critical or emergency station need. The contractor shall evaluate the desirable and reasonable time necessary for a rapid response.

3.2.3 The contractor shall determine the environmental control requirements for selected cargo, grouping cargo of similar requirements into categories.

3.2.4 The contractor shall assess the hazard level posed by selected cargo, grouping cargo of similar hazard levels into categories.

3.2.5 The contractor shall determine Design Reference Missions appropriate to the selected cargo. DRMs should address missions which require replacement of critical ISS supplies for rapid response and missions which require normal resupply of ORUs and other equipment. The contractor shall assess, where practical, the selected cargo to determine pre-launch environmental control requirements, pre-launch processing requirements, and availability of selected cargo (lead time required prior to launch).

3.2.6 The contractor shall develop preliminary traffic models based upon launch need, U.S. cargo planned for ATV/HTV/Progress, and shuttle availability. The assessment should envelope the MTBFs of selected ORUs and current experienced failure rate for ORUs that have operational experience.

3.3 Part 2 – Launch To Low Earth Orbit (LEO)

3.3.1 The contractor shall determine the appropriate restraint and packing requirements for selected cargo.

3.3.2 The contractor shall determine the qualification launch environment for ORUs identified as potential cargo for AAS missions and document those as requirements on the resupply vehicle.

3.3.3 The contractor shall assess the criticality level of the selected cargo, grouping cargo into similar categories.

3.4 Part 3 – Orbital Transfer

3.4.1 The contractor shall determine special crew and ISS support requirements for chosen cargo. Cargo should be categorized according to transfers which are hatch-to-hatch, external-to-internal and external-to-external.

3.5 Part 4 – De-Orbit

3.5.1 The contractor shall determine the ISS downmass requirements for return on ELVs and RLVs, grouping non-recoverable items and items which need recovery.

3.5.2 The contractor shall determine the crew support requirements necessary to stow the downmass.

3.5.3 The contractor shall determine the restraint requirements for the downmass.

3.5.4 The contractor shall determine the qualification descent environment for ORUs identified as potential cargo for AAS missions and document those as requirements on recoverable resupply vehicles.

4 ASSUMPTIONS

Data for this study shall be drawn from existing authoritative (accepted by the ISS program) sources wherever possible. Assumptions made in the performance of this study that are enabling or critical to the mission shall also be provided.

5 DELIVERABLES

5.1.1 The contractor shall provide coordination with the ISS Program Office for all activities under this SOW and identify issues.

5.1.2 The contractor shall provide a plan for accomplishing this work. This plan shall be submitted two weeks after Authority to Proceed (ATP). The plan will identify incremental data deliveries. The plan shall require approval by the Customer Study Manager.

5.1.3 The contractor shall conduct a mid-term status review providing deliverables as specified in the plan. The deliverables should be provided in written and electronic formats, with the electronic format agreed upon by both parties.

5.1.4 The contractor shall provide an outline for a AAS Performance Requirements Document at the middle of the contract period. This report should be provided in written and electronic formats, with the electronic format agreed upon by both parties.

5.1.5 The contractor shall conduct/support up to three meetings with NASA at MSFC determining the content of the requirements document.

5.1.6 The contractor shall provide a AAS Performance Requirements Document at the end of the contract period. This document should be appended with data supporting each of the items listed in Section 3, Background, of this Appendix. This report should be provided in written and electronic formats, with the electronic format agreed upon by both parties.

5.1.7 The contractor shall conduct a summary meeting at the end of the contract period after/at the delivery of the logistics requirements document to explain the contractor's processes and conclusions.

APPENDIX C
RESERVED

APPENDIX D
RESERVED

APPENDIX E
DEFINITIONS

AAS Orbital Transfer Element – The specific flight element that carries the cargo and is attached to the ISS.

AAS System – The integrated end-to-end system supporting Alternate Access to Station. This includes launch vehicle, orbital vehicle, launch facilities, payload processing facilities, ground control, etc.

AAS Vehicle – Any or all of the flight elements included in the AAS system. This includes launch vehicle, orbital transfer element, reentry vehicle, etc.

Accommodations – The additional mass and volume added to a cargo item once it has been packed for launch (e.g., cushioning foam).

Assessment – The process that includes collection of data and the processing of that data to allow declaration of pass/fail status of a particular function for that level of equipment indenture (e. g., end item).

Berthing – Method of mating an incoming vehicle to the ISS using the Space Station Remote Manipulator System. The incoming vehicle does not use its own power to assist in this activity.

Cargo – Equipment or supplies that are delivered to the ISS. Cargo falls into two category types: Systems or Utilization.

Cargo Transfer Bag Equivalent (CTBE) – A unit of measure used to characterize the gross amount of cargo. One CBTE equals 1.86 ft^3 and approximately 37 lb.

Docking – The mating of an incoming vehicle to the ISS, powered by the incoming vehicles, with no assistance from the ISS.

External Cargo – Cargo whose final installed location will be on the external surface of the ISS and will be exposed to the space environment.

Failure – The generic reference to a loss of function or functional redundancy; specifically, the inability of a system, subsystem, string, ORU, component, or part to perform the required function(s) within specified limits.

Hazard – The presence of a potential risk situation caused by an unsafe act or condition. A condition or changing set of circumstances that presents a potential for adverse or harmful consequences; the inherent characteristics of an activity, condition or circumstance, which can produce adverse or harmful consequences.

Internal Cargo – Cargo whose final installed/consumed/used location must be protected form the space environment. This cargo typically must be protected from the space environment during the transportation phase.

Meteoroids and Orbital Debris (M/OD) Critical Item – An item is deemed to be M/OD-critical when effects resulting from meteoroid or orbital debris impact will endanger the crew or Space Station survivability.

Orbital Replacement Unit (ORU) – An ORU is a spare for any system or payload hardware item currently in use on ISS. Some ORUs/Cargo Items are stowed on ISS.

Payload(s) – Equipment associated with research and experiments; also the organization responsible for providing the payload cargo and associated products.

Payload Power – Power dedicated to payload operations within internal payload locations or at the external payload locations.

Pressurized Vehicle – A vehicle that carries internal cargo and protects that cargo from the space environment.

Rapid Safing – Capability of the Orbiter to accomplish an emergency de-orbit or a de-orbit contingency to the next primary landing site.

Safe – A general term denoting relative freedom from and low probability of: personnel injury fatality, loss or damage to vehicles, equipment or facilities, or loss or excessive degradation of the function of critical equipment.

Shuttle Middeck Locker Equivalent (MLE) – Carries up to 54 lb, and holds up to 2.03 ft^3.

System(s) – Equipment for assembly, logistics, and maintenance of the ISS; also the organization responsible for providing the system cargo and associated products.

Unpressurized Vehicle – A vehicle that carries external cargo exposed (partially or totally) to the space environment.

Utilization – Synonymous with Payloads. Sometimes used interchangeably.

APPENDIX F
REFERENCE DOCUMENTS

D683-96059-01	Small Adapter Plate Interface Definition Document
D684-10822-01	Standard Interface Definition Document (SIDD) for the Flight Releasable Attachment Mechanism (FRAM)
D684-11232-01	Certification and Acceptance Requirements Document Enhanced Universal Trunnion Attachment System (EUTAS) - Active
D684-11354-01	Certification and Acceptance Requirements Document Enhanced Universal Trunnion Attachment System (EUTAS) – Passive Kit
JSC-26938	Procurement Specification for the Androgynous Peripheral Docking System for International Space Station Mission
JSC-28169	Interface Control Document for the International Space Station Resupply Stowage Platform 1 Stowage System to Cargo Providers
JSC-39233	Interface Definition Document for the International Space Station Cargo Transfer Bag (CTB)
MIL-STD-1553B	Command and Data Handling Interface
NSTS 07700	System Description and Data Design
NSTS 21000-IDD-ISS	International Space Station Interface Definition Document
NSTS 21000-IDD-MDK	Shuttle Interface Definition Document for Middeck Payloads
SSP 30219	Space Station Reference Coordinate Systems
SSP 30223	Problem Reporting and Corrective Action for the Space Station Program
SSP 30256	Extravehicular Activity (EVA) Standard Interface Control Document
SSP 41000	Systems Specification for the International Space Station
SSP 41004	Common Berthing Mechanism to Pressurized Elements Interface Control Document
SSP 41142	Space Station Program Node Elements to Cupola Element Interface Control Document, Part 1
SSP 42003	Space Station Manned Base (SSMB) to Mobile Servicing System (MSS) Interface Control Document
SSP 42004	Mobile Servicing System to User (Generic) Interface Control Document
SSP 42007	United States On-orbit Segment to Italian Min-Pressurized Logistics Module Interface Control Document

SSP 42131	Space Station Program Integrated Truss Segments P3 and S3 to Attached Payloads and Unpressurized Cargo Carriers (UCC) Standard Interface Control Document
SSP 50005	International Space Station Flight Crew Integration Standard
SSP 50021	Safety Requirements Document
SSP 50200-06	Station Program Implemental Plan, Volume 6: Cargo Physical Processing
SSP 50228, Vol. 15	Space Station Program Configuration and Assembly Standard Interface Control Document – Grapple Fixture Location ICD
SSP 50235	Interface Definition Document for International Space Station Visiting Vehicles
SSP 50261-01	Generic Groundrules, Requirements and Constraints
SSP 50467	ISS Cargo Stowage Technical Manual – Pressurized Volumes
SSP 50504	International Space Station Configuration Document
SSP 50520	International Space Station Logistics and Maintenance Operational Support
SSP 52051	User Electric Power Specifications and Standards
SSP 57000	Pressurized Payloads Interface Requirements Document
SSP 57003	Attach Payload Interface Requirements Document
SSP 57004	Attach Payload Hardware Interface Control Document Template
SSP 57059	Standard Payload Integration Agreement for Pressurized Payloads
SSP 57061	Standard Payload Integration Agreement for Unpressurized Payloads
TDS D8.1.1-04	Final – ISS Integrated Traffic Model Report (DAC 8)

APPENDIX G
CARGO MATRIX

Cargo			Mass		Volume		Dimensions					Location										
Name	Major Type	Minor Type	Total Mass (no accommodations) lbs	Total Mass (no accommodations) kg	Total Volume (no accommodations) ft^3	Total Volume (no accommodations) m^3	length (external only) inches	Width (external only) inches	height (external only) inches	or Bag Size	Subcarrier/FSE	Preferred Launch Location	On-Orbit Location	ISS Transfer Restrictions	Resources Required	Environ constraints - Prelaunch, Pad, Ascent, Vehicle on-orbit,,	Ascent/Return Qualification Limits	Hazard Type	Criticality Level	Response Period	Transfer Location	
Radiator ORU	System	Maintenance	2450	1111.30	288.89	8.1805	114.2	32.5	134.5		FRAM	External	External						C1S			
Radiator ORU	System	Maintenance	2450	1111.30	288.89	8.1805	114.2	32.5	134.5		FRAM	External	External						C1S			
Ammonia Tank Assembly	System	Maintenance	1817.81	824.54	103.89	2.9418	80	51	44		FRAM	External	External						C1S			
Ammonia Tank Assembly	System	Maintenance	1817.81	824.54	103.89	2.9418	80	51	44		FRAM	External	External						C1S			
PV Radiator & Scissorbeam ORU	System	Maintenance	1608	729.38	179.35	5.0786	154	80.5	25		FRAM	External	External						C2			
PV Radiator & Scissorbeam ORU	System	Maintenance	1608	729.38	179.35	5.0786	154	80.5	25		FRAM	External	External						C2			
PV Radiator & Scissorbeam ORU	System	Maintenance	1608	729.38	179.35	5.0786	154	80.5	25		FRAM	External	External						C2			
PV Radiator & Scissorbeam ORU	System	Maintenance	1608	729.38	179.35	5.0786	154	80.5	25		FRAM	External	External						C2			
Thermal Radiator Rotary Joint	System	Maintenance	1142.17	518.08	104	2.945	54	52	64		FRAM	External	External						C1R			
Thermal Radiator Rotary Joint	System	Maintenance	1142.17	518.08	104	2.945	62	52	37		FRAM	External	External						C1R			
MAST CANISTER ASSY.	System	Maintenance	916.1	415.54	616	17.443	40.5	56	469		FRAM	External	External						C1R			
MAST CANISTER ASSY.	System	Maintenance	916.1	415.54	616	17.443	40.5	56	469		FRAM	External	External						C1R			
MAST CANISTER ASSY.	System	Maintenance	916.1	415.54	616	17.443	40.5	56	469		FRAM	External	External						C1R			
MAST CANISTER ASSY.	System	Maintenance	916.1	415.54	616	17.443	40.5	56	469		FRAM	External	External						C1R			
Pump Module	System	Maintenance	860.26	390.21	68.4	1.9369	49	36	67		FRAM	External	External						C2R			
Pump Module	System	Maintenance	860.26	390.21	68.4	1.9369	49	36	67		FRAM	External	External						C2R			
BLANKET AND BOX - L	System	Maintenance	720.91	327.00	51.61	1.4614	185.3	17.5	27.5		FRAM	External	External						C1			
BLANKET AND BOX - L	System	Maintenance	720.91	327.00	51.61	1.4614	185.3	17.5	27.5		FRAM	External	External						C1			
BLANKET AND BOX - L	System	Maintenance	720.91	327.00	51.61	1.4614	185.3	17.5	27.5		FRAM	External	External						C1			
BLANKET AND BOX - L	System	Maintenance	720.91	327.00	51.61	1.4614	185.3	17.5	27.5		FRAM	External	External						C1R			
BLANKET AND BOX - R	System	Maintenance	719.93	326.55	51.61	1.4614	185.3	17.5	27.5		FRAM	External	External						C1			
BLANKET AND BOX - R	System	Maintenance	719.93	326.55	51.61	1.4614	185.3	17.5	27.5		FRAM	External	External						C1			
BLANKET AND BOX - R	System	Maintenance	719.93	326.55	51.61	1.4614	185.3	17.5	27.5		FRAM	External	External						C1			
BLANKET AND BOX - R	System	Maintenance	719.93	326.55	51.61	1.4614	185.3	17.5	27.5		FRAM	External	External						C1R			
ARM ORU	System	Maintenance	643.5	291.89	79.43	2.2492	115.5	46.6	25.5		FRAM	External	External						C2			
Control Moment Gyro (CMG)	System	Maintenance	599.26	271.82	64.35	1.8222	52	45.5	47		FRAM	External	External						C1			
Control Moment Gyro (CMG)-pm	System	Maintenance	599.26	271.82	64.35	1.8222	52	45.5	47		FRAM	External	External						C1			
Nitrogen Tank Assembly	System	Maintenance	566.5	256.96	50.76	1.4374	60	34	43		FRAM	External	External						C1S			
Nitrogen Tank Assembly	System	Maintenance	566.5	256.96	50.76	1.4374	60	34	43		FRAM	External	External						C1S			
Crew & Equipment Translation Aid (CETA)	System	Maintenance	497.62	225.72	182.72	5.1741	97	93	35		FRAM	External	External						C3			
Crew & Equipment Translation Aid (CETA)	System	Maintenance	497.62	225.72	182.72	5.1741	97	93	35		FRAM	External	External						C3			
Flex Hose Rotary Coupler/PDTA	System	Maintenance	454	205.93	33.2	0.9401	51.8	37	29.9		FRAM	External	External						C1R			
Flex Hose Rotary Coupler/PDTA	System	Maintenance	454	205.93	33.2	0.9401	51.8	37	29.9		FRAM	External	External						C1R			
LATCHING END EFFECTOR (LEE)	System	Maintenance	448.9	203.62	25.75	0.7292	44	31.8	31.8		FRAM	External	External						C1R			
LATCHING END EFFECTOR (LEE) (POA)	System	Maintenance	425.4	192.96	25.75	0.7292	44	31.8	31.8		FRAM	External	External						C2R			
ORU BASE ASSEMBLY	System	Maintenance	403	182.80	46.07	1.3046	82	50.3	19.3		FRAM	External	External						C1R			
LATCHING END EFFECTOR (LEE)	System	Maintenance	399.3	181.12	25.75	0.7292	44	31.8	31.8		FRAM	External	External						C2R			
BATTERY ASSEMBLY	System	Maintenance	364.4	165.29	9.29	0.2631	29	41	13.5		FRAM	External	External						C1R			
BATTERY ASSEMBLY	System	Maintenance	364.4	165.29	9.29	0.2631	29	41	13.5		FRAM	External	External						C1R			
BATTERY ASSEMBLY	System	Maintenance	364.4	165.29	9.29	0.2631	29	41	13.5		FRAM	External	External						C1R			
BATTERY ASSEMBLY	System	Maintenance	364.4	165.29	9.29	0.2631	29	41	13.5		FRAM	External	External						C1R			
BATTERY ASSEMBLY	System	Maintenance	364.4	165.29	9.29	0.2631	29	41	13.5		FRAM	External	External						C1R			
BATTERY ASSEMBLY	System	Maintenance	364.4	165.29	9.29	0.2631	29	41	13.5		FRAM	External	External						C1R			
BATTERY ASSEMBLY	System	Maintenance	364.4	165.29	9.29	0.2631	29	41	13.5		FRAM	External	External						C1R			
BATTERY ASSEMBLY	System	Maintenance	364.4	165.29	9.29	0.2631	29	41	13.5		FRAM	External	External						C1R			
BATTERY ASSEMBLY	System	Maintenance	364.4	165.29	9.29	0.2631	29	41	13.5		FRAM	External	External						C1R			
PLASMA CONTACTOR	System	Maintenance	351.04	159.23	6.47	0.1832	27	23	18		FRAM	External	External						C1R			
PLASMA CONTACTOR	System	Maintenance	351.04	159.23	6.47	0.1832	27	23	18		FRAM	External	External						C1R			
BOOM ASSEMBLY A,SSRMS	System	Maintenance	342	155.13	74.61	2.1127	151.96	21	40.4		FRAM	External	External						C1R			
MT/TUS REEL	System	Maintenance	330	149.69	54.94	1.5557	29.1	55.2	29.1		FRAM	External	External						C2R			
BODY ROLL JOINT (BRJ)	System	Maintenance	315.1	142.93	113.16	3.2043	93	36.25	58		FRAM	External	External						C2R			

Cargo			Mass		Volume		Dimensions					Location										
Name	Major Type	Minor Type	Total Mass (no accommodations) lbs	Total Mass (no accommodations) kg	Total Volume (no accommodations) ft^3	Total Volume (no accommodations) m^3	length (external only) inches	Width (external only) inches	height (external only) inches	or Bag Size	Subcarrier/FSE	Preferred Launch Location	On-Orbit Location	ISS Transfer Restrictions	Resources Required	Environ constraints - Prelaunch, Pad, Ascent, Vehicle on-orbit,,	Ascent/Return Qualification Limits	Hazard Type	Criticality Level	Response Period	Transfer Location	
UPPER BODY STRUCTURE (UBS)	System	Maintenance	306.7	139.12	122.05	3.4561	89.9	33.9	69.2		FRAM	External	External						C2			
BOOM ASSEMBLY B, SSRMS	System	Maintenance	298.3	135.31	74.61	2.1127	151.96	21	40.4		FRAM	External	External						C1R			
ELECTRONIC PLATFORM #1	System	Maintenance	265	120.20	15.8	0.4474	50.7	12.1	44.5		FRAM	External	External						C2			
JOINT YAW	System	Maintenance	247.5	112.26	6.08	0.1722	22.85	21	21.91		FRAM	External	External						C1R			
MAIN BUS SWITCHING UNIT	System	Maintenance	247.11	112.09	6.93	0.1962	41	13.5	21.65		FRAM	External	External						C1R			
JOINT PITCH/ROLL	System	Maintenance	240.5	109.09	5.29	0.1498	19.85	21	21.91		FRAM	External	External						C1R			
Cable Box Type IV	System	Maintenance	234.81	106.51	18.25	0.5168	101.9	47.6	6.5		FRAM	External	External						C1R			
Cable Box Type IV	System	Maintenance	234.81	106.51	18.25	0.5168	101.9	47.6	6.5		FRAM	External	External						C1R			
Cable Box Type I	System	Maintenance	234.81	106.51	13.51	0.3826	102.9	34.9	6.5		FRAM	External	External						C1R			
Cable Box Type I	System	Maintenance	234.81	106.51	13.51	0.3826	102.9	34.9	6.5		FRAM	External	External						C1R			
Pump & Flow Control Subassembly	System	Maintenance	233.63	105.97	12.04	0.3409	41	29	17.5		FRAM	External	External						C1R			
Pump & Flow Control Subassembly	System	Maintenance	233.63	105.97	12.04	0.3409	41	29	17.5		FRAM	External	External						C1R			
Pump & Flow Control Subassembly	System	Maintenance	233.63	105.97	12.04	0.3409	41	29	17.5		FRAM	External	External						C1R			
Pump & Flow Control Subassembly	System	Maintenance	233.63	105.97	12.04	0.3409	41	29	17.5		FRAM	External	External						C1R			
Pump & Flow Control Subassembly	System	Maintenance	233.63	105.97	12.04	0.3409	41	29	17.5		FRAM	External	External						C1R			
Pump & Flow Control Subassembly	System	Maintenance	233.63	105.97	12.04	0.3409	41	29	17.5		FRAM	External	External						C1R			
ELECTRONIC PLATFORM #2	System	Maintenance	233	105.69	14.23	0.4029	50.7	10.9	44.5		FRAM	External	External						C2			
BATTERY CHARGE/DISCHARGE UNIT	System	Maintenance	232.5	105.46	16.33	0.4624	37	41	18.6		FRAM	External	External						C1R			
BATTERY CHARGE/DISCHARGE UNIT	System	Maintenance	232.5	105.46	16.33	0.4624	37	41	18.6		FRAM	External	External						C1R			
BATTERY CHARGE/DISCHARGE UNIT	System	Maintenance	232.5	105.46	16.33	0.4624	37	41	18.6		FRAM	External	External						C1R			
BATTERY CHARGE/DISCHARGE UNIT	System	Maintenance	232.5	105.46	16.33	0.4624	37	41	18.6		FRAM	External	External						C1R			
BATTERY CHARGE/DISCHARGE UNIT	System	Maintenance	232.5	105.46	16.33	0.4624	37	41	18.6		FRAM	External	External						C1R			
BATTERY CHARGE/DISCHARGE UNIT	System	Maintenance	232.5	105.46	16.33	0.4624	37	41	18.6		FRAM	External	External						C1R			
BATTERY CHARGE/DISCHARGE UNIT	System	Maintenance	232.5	105.46	16.33	0.4624	37	41	18.6		FRAM	External	External						C1R			
BATTERY CHARGE/DISCHARGE UNIT	System	Maintenance	232.5	105.46	16.33	0.4624	37	41	18.6		FRAM	External	External						C1R			
BATTERY CHARGE/DISCHARGE UNIT	System	Maintenance	232.5	105.46	16.33	0.4624	37	41	18.6		FRAM	External	External						C1R			
LINEAR DRIVE UNIT	System	Maintenance	230.6	104.60	16.62	0.4706	45	22	29		FRAM	External	External						C2R			
S-Band Antenna & Support Assembly (SASA)	System	Maintenance	227.1	103.01	19.22	0.5442	46.7	31.2	22.8		FRAM	External	External						C1SR			
S-Band Antenna & Support Assembly (SASA)	System	Maintenance	227.1	103.01	19.22	0.5442	46.7	31.2	22.8		FRAM	External	External						C1SR			
Drive Lock Assembly (TRRJ)	System	Maintenance	226.3	102.65	3.73	0.1056	20.6	18	17.4		FRAM	External	External						C1R			
Drive Lock Assembly (TRRJ)	System	Maintenance	226.3	102.65	3.73	0.1056	20.6	18	17.4		FRAM	External	External						C1R			
DC SWITCHING UNIT	System	Maintenance	218.22	98.98	8.1	0.2294	40	25	14		FRAM	External	External						C1R			
DC SWITCHING UNIT	System	Maintenance	218.22	98.98	8.1	0.2294	40	25	14		FRAM	External	External						C1R			
DC SWITCHING UNIT	System	Maintenance	218.22	98.98	8.1	0.2294	40	25	14		FRAM	External	External						C1R			
DC SWITCHING UNIT	System	Maintenance	218.22	98.98	8.1	0.2294	40	25	14		FRAM	External	External						C1R			
DC SWITCHING UNIT	System	Maintenance	218.22	98.98	8.1	0.2294	40	25	14		FRAM	External	External						C1R			
DC SWITCHING UNIT	System	Maintenance	218.22	98.98	8.1	0.2294	40	25	14		FRAM	External	External						C1R			
Utility Transfer Assembly (UTA)	System	Maintenance	204.2	92.62	22.75	0.6442	40.9	31	31		FRAM	External	External						C1R			
Utility Transfer Assembly (UTA)	System	Maintenance	204.2	92.62	22.75	0.6442	40.9	31	31		FRAM	External	External						C1R			
Cable Box Type VI	System	Maintenance	200	90.72	50.62	1.4334	102.06	43.93	19.57		FRAM	External	External						C1R			
Cable Box Type VI	System	Maintenance	200	90.72	50.62	1.4334	102.06	43.93	19.57		FRAM	External	External						C1R			
Ku Band Antenna Group	System	Maintenance	194.8	88.36	229.4	6.4959	74	74	72.4		FRAM	External	External						C3			
Cable Box Type V	System	Maintenance	190	86.18	47.03	1.3317	94.06	43.86	19.7		FRAM	External	External						C1R			
Cable Box Type V	System	Maintenance	190	86.18	47.03	1.3317	94.06	43.86	19.7		FRAM	External	External						C1R			
SEQUENTIAL SHUNT UNIT	System	Maintenance	186.31	84.51	6.25	0.177	36	25	12		FRAM	External	External						C1R			
SEQUENTIAL SHUNT UNIT	System	Maintenance	186.31	84.51	6.25	0.177	36	25	12		FRAM	External	External						C1R			
SEQUENTIAL SHUNT UNIT	System	Maintenance	186.31	84.51	6.25	0.177	36	25	12		FRAM	External	External						C1R			
SEQUENTIAL SHUNT UNIT	System	Maintenance	186.31	84.51	6.25	0.177	36	25	12		FRAM	External	External						C1R			
BEARING, MOTOR, ROLL RING MODULE	System	Maintenance	145.41	65.96	9.53	0.2699	28	28	21		FRAM	External	External						C1R			
BEARING, MOTOR, ROLL RING MODULE	System	Maintenance	145.41	65.96	9.53	0.2699	28	28	21		FRAM	External	External						C1R			
BEARING, MOTOR, ROLL RING MODULE	System	Maintenance	145.41	65.96	9.53	0.2699	28	28	21		FRAM	External	External						C1R			

Cargo			Mass		Volume		Dimensions					Location										
Name	Major Type	Minor Type	Total Mass (no accommodations) lbs	Total Mass (no accommodations) kg	Total Volume (no accommodations) ft^3	Total Volume (no accommodations) m^3	length (external only) inches	Width (external only) inches	height (external only) inches	or Bag Size	Subcarrier/FSE	Preferred Launch Location	On-Orbit Location	ISS Transfer Restrictions	Resources Required	Environ constraints - Prelaunch, Pad, Ascent, Vehicle on-orbit,	Ascent/Return Qualification Limits	Hazard Type	Criticality Level	Response Period	Transfer Location	
BEARING, MOTOR, ROLL RING MODULE	System	Maintenance	145.41	65.96	9.53	0.2699	28	28	21		FRAM	External	External						C1R			
DC/DC CONVERTER UNIT EXT HEAT PIPE	System	Maintenance	140.33	63.65	5.87	0.1662	28.25	24	14.95		FRAM	External	External						C1R			
Cable Box Type III	System	Maintenance	120.1	54.48	14.17	0.4012	94.06	13.3	19.57		FRAM	External	External						C1R			
Cable Box Type III	System	Maintenance	120.1	54.48	14.17	0.4012	94.06	13.3	19.57		FRAM	External	External						C1R			
Cable Box Type III	System	Maintenance	120.1	54.48	14.17	0.4012	94.06	13.3	19.57		FRAM	External	External						C1R			
Cable Box Type III	System	Maintenance	120.1	54.48	14.17	0.4012	94.06	13.3	19.57		FRAM	External	External						C1R			
DC/DC CONVERTER UNIT EXTERNAL	System	Maintenance	117.36	53.23	5.87	0.1662	14.95	28.25	24		FRAM	External	External						C1R			
DC/DC CONVERTER UNIT EXTERNAL	System	Maintenance	117.36	53.23	5.87	0.1662	14.95	28.25	24		FRAM	External	External						C1R			
DC/DC CONVERTER UNIT EXTERNAL	System	Maintenance	117.36	53.23	5.87	0.1662	14.95	28.25	24		FRAM	External	External						C1R			
DC/DC CONVERTER UNIT EXTERNAL	System	Maintenance	117.36	53.23	5.87	0.1662	14.95	28.25	24		FRAM	External	External						C1R			
DC/DC CONVERTER UNIT EXTERNAL	System	Maintenance	117.36	53.23	5.87	0.1662	14.95	28.25	24		FRAM	External	External						C1R			
DC/DC CONVERTER UNIT EXTERNAL	System	Maintenance	117.36	53.23	5.87	0.1662	14.95	28.25	24		FRAM	External	External						C1R			
DC/DC CONVERTER UNIT EXTERNAL	System	Maintenance	117.36	53.23	5.87	0.1662	14.95	28.25	24		FRAM	External	External						C1R			
DC/DC CONVERTER UNIT EXTERNAL	System	Maintenance	117.36	53.23	5.87	0.1662	14.95	28.25	24		FRAM	External	External						C1R			
DC/DC CONVERTER UNIT EXTERNAL	System	Maintenance	117.36	53.23	5.87	0.1662	14.95	28.25	24		FRAM	External	External						C1R			
DC/DC CONVERTER UNIT EXTERNAL	System	Maintenance	117.36	53.23	5.87	0.1662	14.95	28.25	24		FRAM	External	External						C1R			
ORU/TOOLS CHANGEOUT MECHANISM	System	Maintenance	108.2	49.08	2.67	0.0756	23.5	14	14		FRAM	External	External						C2			
Coldplate Assembly, MBSU	System	Maintenance	106.7	48.40	14.8	0.4191	41.2	34.3	18.2		FRAM	External	External						C1R			
HEAT EXCHANGER, 4KW	System	Maintenance	105	47.63	2.35	0.0665	25.9	22.1	7.1		FRAM	External	External						C1R			
Cable Box Type II	System	Maintenance	100.38	45.53	14.17	0.4012	94.06	13.3	19.57		FRAM	External	External						C1R			
Cable Box Type II	System	Maintenance	100.38	45.53	14.17	0.4012	94.06	13.3	19.57		FRAM	External	External						C1R			
Cable Box Type II	System	Maintenance	100.38	45.53	14.17	0.4012	94.06	13.3	19.57		FRAM	External	External						C1R			
Cable Box Type II	System	Maintenance	100.38	45.53	14.17	0.4012	94.06	13.3	19.57		FRAM	External	External						C1R			
Coldplate Assembly, DDCU	System	Maintenance	97.45	44.20	5.14	0.1455	27	14	23.5		FRAM	External	External						C1R			
Coldplate Assembly, DDCU	System	Maintenance	97.45	44.20	5.14	0.1455	27	14	23.5		FRAM	External	External						C1R			
Coldplate Assembly, DDCU	System	Maintenance	97.45	44.20	5.14	0.1455	27	14	23.5		FRAM	External	External						C1R			
Coldplate Assembly, DDCU	System	Maintenance	97.45	44.20	5.14	0.1455	27	14	23.5		FRAM	External	External						C1R			
Coldplate Assembly, DDCU	System	Maintenance	97.45	44.20	5.14	0.1455	27	14	23.5		FRAM	External	External						C1R			
Heat Exchanger, High Load, 0-25 KW	System	Maintenance	92.56	41.98	2.04	0.0578	24	21	7		FRAM	External	External						C2R			
Heat Exchanger, High Load, 0-25 KW	System	Maintenance	92.56	41.98	2.04	0.0578	24	21	7		FRAM	External	External						C2R			
Heat Exchanger, High Load, 0-25 KW	System	Maintenance	92.56	41.98	2.04	0.0578	24	21	7		FRAM	External	External						C2R			
Heat Exchanger, High Load, 0-25 KW	System	Maintenance	92.56	41.98	2.04	0.0578	24	21	7		FRAM	External	External						C2R			
ELECTRONIC CONTROL UNIT	System	Maintenance	89.89	40.77	2.92	0.0827	22.7	11.9	18.7		FRAM	External	External						C1R			
ELECTRONIC CONTROL UNIT	System	Maintenance	89.89	40.77	2.92	0.0827	22.7	11.9	18.7		FRAM	External	External						C1R			
ELECTRONIC CONTROL UNIT	System	Maintenance	89.89	40.77	2.92	0.0827	22.7	11.9	18.7		FRAM	External	External						C1R			
ELECTRONIC CONTROL UNIT	System	Maintenance	89.89	40.77	2.92	0.0827	22.7	11.9	18.7		FRAM	External	External						C1R			
Ku Band Transmitter/Receiver/Controller	System	Maintenance	80	36.29	2.36	0.0668	25	16.2	10.09		FRAM	External	External						C3			
ROTARY JOINT MOTOR CONTROLLER	System	Maintenance	77.3	35.06	2.02	0.0572	26	17	7.9		FRAM	External	External						C1R			
ROTARY JOINT MOTOR CONTROLLER	System	Maintenance	77.3	35.06	2.02	0.0572	26	17	7.9		FRAM	External	External						C1R			
ROTARY JOINT MOTOR CONTROLLER	System	Maintenance	77.3	35.06	2.02	0.0572	26	17	7.9		FRAM	External	External						C1R			
ROTARY JOINT MOTOR CONTROLLER	System	Maintenance	77.3	35.06	2.02	0.0572	26	17	7.9		FRAM	External	External						C1R			
CPDS - EVA	System	Maintenance	77	34.93	3.65	0.1034	16.2	15.75	24.75		FRAM	External	External						C3			
Rate Gyro Assembly	System	Maintenance	60.82	27.59	4.56	0.1291	23.6	22.1	15.1		FRAM	External	External						C1R			
ORU Tool Platform	System	Maintenance	58.6	26.58	12.39	0.3508	60.9	20.2	17.4		FRAM	External	External						C2			
Radiator ORU, Nadir	System	Maintenance	50.4	22.86	4.81	0.1362	18	21	22		FRAM	External	External						C1R			
Radiator ORU, Zenith	System	Maintenance	45.9	20.82	4.81	0.1362	18	21	22		FRAM	External	External						C1R			
LUMINAIRE, VIDEO CAMERA	System	Maintenance	32.5	14.74	3.01	0.0852	17	17	18		FRAM	External	External						C2R			
LUMINAIRE, VIDEO CAMERA	System	Maintenance	32.5	14.74	3.01	0.0852	17	17	18		FRAM	External	External						C2R			
Wire Harness Assembly External	System	Maintenance	30	13.61	6.77	0.1917					FRAM	External	External						C2			
Wire Harness Assembly External	System	Maintenance	30	13.61	6.77	0.1917					FRAM	External	External						C2			
Wire Harness Assembly External	System	Maintenance	30	13.61	6.77	0.1917					FRAM	External	External						C2			
Wire Harness Assembly External	System	Maintenance	30	13.61	6.77	0.1917					FRAM	External	External						C2			

Cargo			Mass		Volume		Dimensions					Location										
Name	Major Type	Minor Type	Total Mass (no accommodations) lbs	Total Mass (no accommodations) kg	Total Volume (no accommodations) ft^3	Total Volume (no accommodations) m^3	length (external only) inches	Width (external only) inches	height (external only) inches	or Bag Size	Subcarrier/FSE	Preferred Launch Location	On-Orbit Location	ISS Transfer Restrictions	Resources Required	Environ constraints - Prelaunch, Pad, Ascent, Vehicle on-orbit,	Ascent/Return Qualification Limits	Hazard Type	Criticality Level	Response Period	Transfer Location	
Wire Harness Assembly External	System	Maintenance	30	13.61	6.77	0.1917					FRAM	External	External						C2			
Wire Harness Assembly External	System	Maintenance	30	13.61	6.77	0.1917					FRAM	External	External						C2			
Wire Harness Assembly External	System	Maintenance	30	13.61	6.77	0.1917					FRAM	External	External						C2			
Wire Harness Assembly External	System	Maintenance	30	13.61	6.77	0.1917					FRAM	External	External						C2			
Wire Harness Assembly External	System	Maintenance	30	13.61	6.77	0.1917					FRAM	External	External						C2			
Wire Harness Assembly External	System	Maintenance	30	13.61	6.77	0.1917					FRAM	External	External						C2			
MT/TUS INTERFACE UMBILICAL ASSY	System	Maintenance	22.39	10.16	1.9	0.0538	20.3	13.5	12		FRAM	External	External						C2R			
Fluid Line Assembly External	System	Maintenance	20	9.07	0.04	0.0011					FRAM	External	External						C2			
Fluid Line Assembly External	System	Maintenance	20	9.07	0.04	0.0011					FRAM	External	External						C2			
Fluid Line Assembly External	System	Maintenance	20	9.07	0.04	0.0011					FRAM	External	External						C2			
Fluid Line Assembly External	System	Maintenance	20	9.07	0.04	0.0011					FRAM	External	External						C2			
GPS Antenna Assy	System	Maintenance	15	6.80	0.81	0.0229	17.1	11	7.4		FRAM	External	External						C2R			
VIDEO SIGNAL CONVERTER	System	Maintenance	11	4.99	1.25	0.0354	18	15	8		FRAM	External	External						C2R			
VIDEO SIGNAL CONVERTER	System	Maintenance	11	4.99	1.25	0.0354	18	15	8		FRAM	External	External						C2R			
VIDEO SIGNAL CONVERTER	System	Maintenance	11	4.99	1.25	0.0354	18	15	8		FRAM	External	External						C2R			
ENGERY ABSORBER	System	Maintenance	10	4.54	1.5	0.0425					FRAM	External	External						C1R			
ENGERY ABSORBER	System	Maintenance	10	4.54	1.5	0.0425					FRAM	External	External						C1R			
Depress/Repress Pump	System	Maintenance	210	95.25	13.75	0.3894	36	60	11	Rack	MLE	Internal	Internal	APAS					C1R			
Pump Package	System	Maintenance	195.1	88.50	4.85	0.1373	17	17	29	M02	MLE	Internal	Internal						C1R			
Pump Package	System	Maintenance	195.1	88.50	4.85	0.1373	17	17	29	M03	MLE	Internal	Internal						C1R			
ORU Transfer Device (OTD)	System	Maintenance	194	88.00	2.29	0.0648	27.96	19.86	7.12	M02	MLE	Internal	External						C1R			
FUEL CELL WATER TANK	System	Maintenance	159	72.12	13.46	0.3811					MLE	Internal	Internal						C1R			
Drive Lock Assembly (SARJ)	System	Maintenance	145.1	65.82	4.26	0.1206	24.2	18.1	16.8	M02	MLE	Internal	External						C1R			
Drive Lock Assembly (SARJ)	System	Maintenance	145.1	65.82	4.26	0.1206	24.2	18.1	16.8	M02	MLE	Internal	External						C1R			
DC/DC CONVERTER UNIT INTERNAL	System	Maintenance	107	48.53	2.94	0.0833	10.45	27.8	17.5	3 CTB	MLE	Internal	Internal						C1R			
DC/DC CONVERTER UNIT INTERNAL	System	Maintenance	107	48.53	2.94	0.0833	10.45	27.8	17.5	3 CTB	MLE	Internal	Internal						C1R			
EXT TV CAMERA GROUP (ETVCG)	System	Maintenance	93	42.18	4.3	0.1218	17.2	15.3	28.3	3 CTB	MLE	Internal	External						C2R			
EXT TV CAMERA GROUP (ETVCG)	System	Maintenance	93	42.18	4.3	0.1218	28.3	15.3	13.2	3 CTB	MLE	Internal	External						C2R			
EXT TV CAMERA GROUP (ETVCG)	System	Maintenance	93	42.18	4.3	0.1218	28.3	15.3	13.2	3 CTB	MLE	Internal	External						C2R			
HEAT EXCHANGER	System	Maintenance	92.59	42.00	13.89	0.3933	40	30	20	Rack	MLE	Internal	Internal						C1			
External Video Switch Unit (EVSU)	System	Maintenance	87	39.46	1.29	0.0365	18.6	13	9.2	1 CTB	MLE	Internal	External						C2R			
External Video Switch Unit (EVSU)	System	Maintenance	87	39.46	1.29	0.0365	18.6	13	9.2	1 CTB	MLE	Internal	External						C2R			
External Video Switch Unit (EVSU)	System	Maintenance	87	39.46	1.29	0.0365	18.6	13	9.2	1 CTB	MLE	Internal	External						C2R			
LOAD TRANSFER UNIT	System	Maintenance	84.8	38.46	1.22	0.0345	20.3	12.1	8.6	3 CTB	MLE	Internal	External						C2			
LOAD TRANSFER UNIT	System	Maintenance	84.8	38.46	1.22	0.0345	20.3	12.1	8.6	3 CTB	MLE	Internal	External						C2			
LOAD TRANSFER UNIT	System	Maintenance	83.15	37.72	1.22	0.0345	20.3	12.1	8.6	3 CTB	MLE	Internal	External						C2			
LOAD TRANSFER UNIT	System	Maintenance	83.15	37.72	1.22	0.0345	20.3	12.1	8.6	3 CTB	MLE	Internal	External						C2			
CHARCOAL BED	System	Maintenance	83.09	37.69	3.97	0.1124	32.5	15.3	13.8	M02	MLE	Internal	Internal						C1R			
Umbilical Mechanism Assembly (UMA) MT	System	Maintenance	82.9	37.60	1.25	0.0354	13.9	13.5	11.5	2 CTB	MLE	Internal	External						C2			
POWER DATA GRAPPLE FIXTURE (PDGF)	System	Maintenance	72.8	33.02	7.41	0.2098	37.3	34	10.1	Rack	MLE	Internal	External	APAS					C1R			
POWER DATA GRAPPLE FIXTURE (PDGF)	System	Maintenance	72.8	33.02	7.41	0.2098	37.3	34	10.1	Rack	MLE	Internal	External	APAS					C1R			
POWER DATA GRAPPLE FIXTURE (PDGF)	System	Maintenance	72.8	33.02	7.41	0.2098	37.3	34	10.1	Rack	MLE	Internal	External	APAS					C1R			
Umbilical Mechanism Assy Payload Attach	System	Maintenance	72	32.66	1.25	0.0354	13.9	13.5	11.5	2 CTB	MLE	Internal	External						C2			
Umbilical Mechanism ULC Attach	System	Maintenance	72	32.66	1.25	0.0354	13.9	13.5	11.5	2 CTB	MLE	Internal	External						C2			
LATCH ASSY, CAPTURE, PAYLOAD	System	Maintenance	65	29.48	3.75	0.1062	12	20	27	M02	MLE	Internal	External						C2R			
LATCH ASSY, CAPTURE, ULC	System	Maintenance	65	29.48	3.75	0.1062	12	20	27	M02	MLE	Internal	External						C2R			
Volatile Organic Analyzer (VOA)	System	Maintenance	65	29.48	3.25	0.092	28.13	19	10.5	M02	MLE	Internal	Internal						C3			
Articulating Portable Foot Restraint	System	Maintenance	63	28.58	10.85	0.3072	25	25	30	Rack	MLE	Internal	External						C1R			
Articulating Portable Foot Restraint	System	Maintenance	63	28.58	10.85	0.3072	25	25	30	Rack	MLE	Internal	External						C1R			
Articulating Portable Foot Restraint	System	Maintenance	63	28.58	10.85	0.3072	25	25	30	Rack	MLE	Internal	External						C1R			

Cargo			Mass		Volume		Dimensions					Location										
Name	Major Type	Minor Type	Total Mass (no accommodations) lbs	Total Mass (no accommodations) kg	Total Volume (no accommodations) ft^3	Total Volume (no accommodations) m^3	length (external only) inches	Width (external only) inches	height (external only) inches	or Bag Size	Subcarrier/FSE	Preferred Launch Location	On-Orbit Location	ISS Transfer Restrictions	Resources Required	Environ constraints - Prelaunch, Pad, Ascent, Vehicle on-orbit,,	Ascent/Return Qualification Limits	Hazard Type	Criticality Level	Response Period	Transfer Location	
Articulating Portable Foot Restraint	System	Maintenance	63	28.58	10.85	0.3072	25	25	30	Rack	MLE	Internal	External						C1R			
SPCU Maint. Kit	System	Maintenance	61	27.67	10	0.2832					MLE	Internal	Internal						C1R			
Utility Rail Assy-8	System	Maintenance	60.4	27.40	0.99	0.028	45.2	5.8	6.5	Rack	MLE	Internal	External						C1R			
Utility Rail Assy-8	System	Maintenance	60.4	27.40	0.99	0.028	45.2	5.8	6.5	Rack	MLE	Internal	External						C1R			
Tool Holder Assembly (THA)	System	Maintenance	58.8	26.67	9.04	0.256	26.7	26	22.5	Rack	MLE	Internal	External						C2			
MDM-10 - external MDM-S0-1	System	Maintenance	58	26.31	1.13	0.032	14.9	14.2	9.2	1 CTB	MLE	Internal	External						C1R			
MDM-10 - external MDM-S0-2	System	Maintenance	58	26.31	1.13	0.032	14.9	14.2	9.2	1 CTB	MLE	Internal	External						C1R			
Radiator Beam Valve Module	System	Maintenance	56.2	25.49	1.28	0.0362	24.5	18	5	3 CTB	MLE	Internal	External						C2R			
Radiator Beam Valve Module	System	Maintenance	56.2	25.49	1.28	0.0362	24.5	18	5	3 CTB	MLE	Internal	External						C2R			
Radiator Beam Valve Module	System	Maintenance	56.2	25.49	1.28	0.0362	24.5	18	5	3 CTB	MLE	Internal	External						C2R			
Radiator Beam Valve Module	System	Maintenance	56.2	25.49	1.28	0.0362	24.5	18	5	3 CTB	MLE	Internal	External						C2R			
Oxygen Reg & Dist Assy	System	Maintenance	56	25.40	0.413	0.0117	9	6	13.2	1/2 CTB	MLE	Internal	Internal						C1R			
INLET, FAN GROUP	System	Maintenance	55.8	25.31	4.621	0.1309	22	17.5	20.8	M02	MLE	Internal	Internal						C1R			
INLET, FAN GROUP	System	Maintenance	55.8	25.31	4.621	0.1309	22	17.5	20.8	M02	MLE	Internal	Internal						C1R			
Utility Rail, SPDA 8	System	Maintenance	53.8	24.40	0.93	0.0263	42.4	5.8	6.5	Rack	MLE	Internal	External						C1R			
Electrical Assy, CMG	System	Maintenance	53	24.04	3.46	0.098	23	20	13	M01	MLE	Internal	External						C1R			
MDM-16 - internal MDM-N2-2	System	Maintenance	50.1	22.72	1.02	0.0289	13.3	14.4	9.2	1 CTB	MLE	Internal	Internal						C1R			
MDM-16 - internal MDM-N3-2	System	Maintenance	50.1	22.72	1.02	0.0289	13.3	14.4	9.2	1 CTB	MLE	Internal	Internal						C1R			
PRESSURE CONTROL PANEL ASSY.	System	Maintenance	50	22.68	1.24	0.0351	19	12.4	9.1	1 CTB	MLE	Internal	Internal						C1R			
PRESSURE CONTROL PANEL ASSY.	System	Maintenance	50	22.68	1.24	0.0351	19	12.4	9.1	1 CTB	MLE	Internal	Internal						C1R			
Utility Rail, RPDA 8	System	Maintenance	50	22.68	0.99	0.028	45.2	5.8	6.5	Rack	MLE	Internal	External						C1R			
Utility Rail, RPDA 8	System	Maintenance	50	22.68	0.99	0.028	45.2	5.8	6.5	Rack	MLE	Internal	External						C1R			
PFR Workstation Stanchion Assy	System	Maintenance	48.53	22.01	11.85	0.3356	67.78	28.5	10.6	Rack	MLE	Internal	External	APAS					C1R			
MDM-16 - internal MDM-N2-1	System	Maintenance	48.5	22.00	1.02	0.0289	13.3	14.4	9.2	1 CTB	MLE	Internal	Internal						C1R			
MDM-16 - internal MDM-N3-1	System	Maintenance	48.5	22.00	1.02	0.0289	13.3	14.4	9.2	1 CTB	MLE	Internal	Internal						C1R			
ARTIFICIAL VISION UNIT	System	Maintenance	48	21.77	0.97	0.0275	12.75	14.4	9.15	1 CTB	MLE	Internal	Internal						C2R			
Utility Rail Assy, 2	System	Maintenance	46.82	21.24	0.43	0.0122	17.2	5.8	7.5	1 CTB	MLE	Internal	External						C1R			
CAMERA, LIGHT & PTU ASSEMBLY (CLPA)	System	Maintenance	46	20.87	6.64	0.188	23	23	21.7	M01	MLE	Internal	External						C2R			
CAMERA, LIGHT & PTU ASSEMBLY (CLPA)	System	Maintenance	46	20.87	6.64	0.188	23	23	21.7	M01	MLE	Internal	External						C2R			
CAMERA, LIGHT & PTU ASSEMBLY (CLPA)	System	Maintenance	46	20.87	6.64	0.188	23	23	21.7	M01	MLE	Internal	External						C2R			
POWER SWITCHING UNIT, SPDM	System	Maintenance	45	20.41	0.76	0.0215	14.5	10	9	1 CTB	MLE	Internal	External						C2R			
MDM-10 - external MDM-N1-1	System	Maintenance	43.2	19.60	0.97	0.0275	14.9	12.2	9.2	1 CTB	MLE	Internal	External						C1R			
MDM-10 - external MDM-N1-2	System	Maintenance	43.2	19.60	0.97	0.0275	14.9	12.2	9.2	1 CTB	MLE	Internal	External						C1R			
Temporary Equipment Restraint Aid (TERA)	System	Maintenance	42.95	19.48	18.63	0.5275	77	19	22	Rack	MLE	Internal	External	APAS					C1R			
ROLLER SUSPENSION UNIT	System	Maintenance	42.85	19.44	1.2	0.034	15.3	12	11.3	2 CTB	MLE	Internal	External						C2			
Signal Processor, Baseband, ACS	System	Maintenance	42.82	19.42	1	0.0283	14.4	13	9.2	1 CTB	MLE	Internal	External						C1SR			
Signal Processor, Baseband, ACS	System	Maintenance	42.82	19.42	1	0.0283	14.4	13	9.2	1 CTB	MLE	Internal	External						C1SR			
TDRSS Transponder (S BAND)	System	Maintenance	42.76	19.40	1	0.0283	14.4	13	9.2	1 CTB	MLE	Internal	External						C1SR			
TDRSS Transponder (S BAND)	System	Maintenance	42.76	19.40	1	0.0283	14.4	13	9.2	1 CTB	MLE	Internal	External						C1SR			
MDM-10 - external MDM-P1-2	System	Maintenance	41.7	18.91	1.13	0.032	14.9	14.2	9.2	1 CTB	MLE	Internal	External						C1R			
MDM-10 - external MDM-S1-1	System	Maintenance	41.7	18.91	1.13	0.032	14.9	14.2	9.2	1 CTB	MLE	Internal	External						C1R			
Water Sampler & Archiver (WS/A)	System	Maintenance	41	18.60	1.61	0.0456	19.3	9	16	1 CTB	MLE	Internal	Internal						C3			
CL Umbilical Interface Panel	System	Maintenance	41	18.60	0.04	0.0011					MLE	Internal	Internal						C1R			
MDM-16 - enhanced/external MDM-EXT-1	System	Maintenance	40	18.14	1.02	0.0289	14.9	16.4	9.2	1 CTB	MLE	Internal	External						C1R			
MDM-16 - enhanced/external MDM-EXT-2	System	Maintenance	40	18.14	1.02	0.0289	14.9	16.4	9.2	1 CTB	MLE	Internal	External						C1R			
Pan Tilt Unit (PTU)	System	Maintenance	40	18.14	0.34	0.0096	16	6.06	6.06	1/2 CTB	MLE	Internal	External						C2R			
Pan Tilt Unit (PTU)	System	Maintenance	40	18.14	0.34	0.0096	16	6.06	6.06	1/2 CTB	MLE	Internal	External						C2R			
Pan Tilt Unit (PTU)	System	Maintenance	40	18.14	0.34	0.0096	16	6.06	6.06	1/2 CTB	MLE	Internal	External						C2R			
CAMERA AND LIGHT ASSEMBLY (CLA)	System	Maintenance	39.3	17.83	1.44	0.0408	15.7	12.7	12.5	2 CTB	MLE	Internal	External						C2R			

Cargo			Mass		Volume		Dimensions					Location										
Name	Major Type	Minor Type	Total Mass (no accommodations) lbs	Total Mass (no accommodations) kg	Total Volume (no accommodations) ft^3	Total Volume (no accommodations) m^3	length (external only) inches	Width (external only) inches	height (external only) inches	or Bag Size	Subcarrier/FSE	Preferred Launch Location	On-Orbit Location	ISS Transfer Restrictions	Resources Required	Environ constraints - Prelaunch, Pad, Ascent, Vehicle on-orbit,	Ascent/Return Qualification Limits	Hazard Type	Criticality Level	Response Period	Transfer Location	
CAMERA AND LIGHT ASSEMBLY (CLA)	System	Maintenance	39.3	17.83	1.44	0.0408	15.7	12.7	12.5	2 CTB	MLE	Internal	External						C2R			
CAMERA AND LIGHT ASSEMBLY (CLA)	System	Maintenance	39.3	17.83	1.44	0.0408	15.7	12.7	12.5	2 CTB	MLE	Internal	External						C2R			
Utility Rail, SPDA 6	System	Maintenance	39.06	17.72	0.74	0.021	34	5.8	6.5	M02	MLE	Internal	External						C1R			
D&C Panel Unit Assembly	System	Maintenance	37.3	16.92	1.18	0.0334	14	12.13	12	2 CTB	MLE	Internal	Internal						C1			
D&C Panel Unit Assembly	System	Maintenance	37.3	16.92	1.18	0.0334	14	12.13	12	2 CTB	MLE	Internal	Internal						C1			
CPDS - IV	System	Maintenance	36	16.33	2.6	0.0736	20	15	15	3 CTB	MLE	Internal	Internal						C3			
Advanced Life Support (ALS) Pack	System	Maintenance	36	16.33	1.69	0.0479	26	14	8	3 CTB	MLE	Internal	Internal						C3			
DEFIBRILLATOR	System	Maintenance	36	16.33	1.38	0.0391	20.5	14.5	8	3 CTB	MLE	Internal	Internal						C3			
ARM COMPUTER UNIT ASSY	System	Maintenance	33.8	15.33	1.65	0.0467	14	19	10.75	2 CTB	MLE	Internal	External						C1R			
ARM COMPUTER UNIT ASSY	System	Maintenance	33.8	15.33	1.65	0.0467	14	19	10.75	2 CTB	MLE	Internal	External						C1R			
Utility Rail, SPDA 6	System	Maintenance	33.05	14.99	0.8	0.0227	36.8	5.8	6.5	Rack	MLE	Internal	External						C2			
Utility Rail, SPDA 6	System	Maintenance	33.05	14.99	0.8	0.0227	36.8	5.8	6.5	Rack	MLE	Internal	External						C2			
Video Tape Recorder	System	Maintenance	32.81	14.88	0.57	0.0161	15.88	8.1	7.61	1/2 CTB	MLE	Internal	Internal						C3			
CONTROLLER ASSEMBLY - 1	System	Maintenance	31.8	14.42	0.57	0.0161	19	12	4.3	1 CTB	MLE	Internal	Internal						C2			
CONTROLLER ASSEMBLY - 1	System	Maintenance	31.8	14.42	0.57	0.0161	19	12	4.3	1 CTB	MLE	Internal	Internal						C2			
CONTROLLER ASSEMBLY - 2	System	Maintenance	31.8	14.42	0.57	0.0161	19	12	4.3	1 CTB	MLE	Internal	Internal						C2			
CONTROLLER ASSEMBLY - 3	System	Maintenance	31.8	14.42	0.57	0.0161	19	12	4.3	1 CTB	MLE	Internal	Internal						C2			
VIDEO DISTRIBUTION UNIT(VDU)	System	Maintenance	31.72	14.39	1.49	0.0422	18.5	15.5	9	1 CTB	MLE	Internal	External						C2R			
VIDEO DISTRIBUTION UNIT(VDU)	System	Maintenance	31.72	14.39	1.49	0.0422	18.5	15.5	9	1 CTB	MLE	Internal	External						C2R			
MDM-16 ESS EXTERNAL CHASSIS	System	Maintenance	30.7	13.93	1.3	0.0368	14.9	16.4	9.2	1 CTB	MLE	Internal	External						C1			
MDM-16 ESS EXTERNAL CHASSIS	System	Maintenance	30.7	13.93	1.3	0.0368	14.9	16.4	9.2	1 CTB	MLE	Internal	External						C1			
MDM-16 ENH/INT CHASSIS (w/o fiber optic)	System	Maintenance	30.5	13.83	1.02	0.0289	13.3	14.4	9.2	1 CTB	MLE	Internal	Internal						C1			
MDM-16 ENH/INT CHASSIS (w/o fiber optic)	System	Maintenance	30.5	13.83	1.02	0.0289	13.3	14.4	9.2	1 CTB	MLE	Internal	Internal						C1			
MDM-16 ENH/INT CHASSIS (w/o fiber optic)	System	Maintenance	30.5	13.83	1.02	0.0289	13.3	14.4	9.2	1 CTB	MLE	Internal	Internal						C1			
MDM-16 ENH/INT CHASSIS (w/o fiber optic)	System	Maintenance	30.5	13.83	1.02	0.0289	13.3	14.4	9.2	1 CTB	MLE	Internal	Internal						C1			
MDM-16 ENH/INT CHASSIS (w/o fiber optic)	System	Maintenance	30.5	13.83	1.02	0.0289	13.3	14.4	9.2	1 CTB	MLE	Internal	Internal						C1			
MDM-16 ENH/INT CHASSIS (w/o fiber optic)	System	Maintenance	30.5	13.83	1.02	0.0289	13.3	14.4	9.2	1 CTB	MLE	Internal	Internal						C1			
MDM-16 ENH/INT CHASSIS (w/o fiber optic)	System	Maintenance	30.5	13.83	1.02	0.0289	13.3	14.4	9.2	1 CTB	MLE	Internal	Internal						C1			
MDM-16 ENHANCED/INTERNAL CHASSIS	System	Maintenance	30.5	13.83	1.02	0.0289	13.3	14.4	9.2	1 CTB	MLE	Internal	Internal						C1			
MDM-16 ENHANCED/INTERNAL CHASSIS	System	Maintenance	30.5	13.83	1.02	0.0289	13.3	14.4	9.2	1 CTB	MLE	Internal	Internal						C1			
MDM-16 ENHANCED/INTERNAL CHASSIS	System	Maintenance	30.5	13.83	1.02	0.0289	13.3	14.4	9.2	1 CTB	MLE	Internal	Internal						C1			
MDM-16 ENHANCED/INTERNAL CHASSIS	System	Maintenance	30.5	13.83	1.02	0.0289	13.3	14.4	9.2	1 CTB	MLE	Internal	Internal						C1			
MDM-16 ENHANCED/INTERNAL CHASSIS	System	Maintenance	30.5	13.83	1.02	0.0289	13.3	14.4	9.2	1 CTB	MLE	Internal	Internal						C1			
1553 Comm Bus PIM-W14	System	Maintenance	30	13.61	6.77	0.1917					MLE	Internal	External						C1R			
1553 Comm Bus PIM-W2	System	Maintenance	30	13.61	6.77	0.1917					MLE	Internal	External						C1R			
2nd Power PIM-W26	System	Maintenance	30	13.61	6.77	0.1917					MLE	Internal	External						C1R			
DC Cntrl & 2nd Pwr PIM-W16	System	Maintenance	30	13.61	6.77	0.1917					MLE	Internal	External						C1R			
DC Cntrl & 2nd Pwr PIM-W4	System	Maintenance	30	13.61	6.77	0.1917					MLE	Internal	External						C1R			
DC Cntrl & 2nd Pwr PIM-W5	System	Maintenance	30	13.61	6.77	0.1917					MLE	Internal	External						C1R			
DC Cntrl & Prim. Pwr PIM-W15	System	Maintenance	30	13.61	6.77	0.1917					MLE	Internal	External						C1R			
DC Cntrl & Prim. Pwr PIM-W24	System	Maintenance	30	13.61	6.77	0.1917					MLE	Internal	External						C1R			
Primary Pwr PIM-W11	System	Maintenance	30	13.61	6.77	0.1917					MLE	Internal	External						C1R			
Primary Pwr PIM-W111	System	Maintenance	30	13.61	6.77	0.1917					MLE	Internal	External						C1R			
Primary Pwr PIM-W18	System	Maintenance	30	13.61	6.77	0.1917					MLE	Internal	External						C1R			
Z1 Cables	System	Maintenance	30	13.61	6.77	0.1917					MLE	Internal	External						C1R			

Cargo			Mass		Volume		Dimensions					Location										
Name	Major Type	Minor Type	Total Mass (no accommodations) lbs	Total Mass (no accommodations) kg	Total Volume (no accommodations) ft^3	Total Volume (no accommodations) m^3	length (external only) inches	Width (external only) inches	height (external only) inches	or Bag Size	Subcarrier/FSE	Preferred Launch Location	On-Orbit Location	ISS Transfer Restrictions	Resources Required	Environ constraints - Prelaunch, Pad, Ascent, Vehicle on-orbit,	Ascent/Return Qualification Limits	Hazard Type	Criticality Level	Response Period	Transfer Location	
1553 Comm Bus PIM-W12	System	Maintenance	30	13.61	6.77	0.1917					MLE	Internal	External						C2			
1553 Comm Bus PIM-W12	System	Maintenance	30	13.61	6.77	0.1917					MLE	Internal	External						C2			
1553 Comm Bus PIM-W12	System	Maintenance	30	13.61	6.77	0.1917					MLE	Internal	External						C2			
1553 Comm Bus PIM-W12	System	Maintenance	30	13.61	6.77	0.1917					MLE	Internal	External						C2			
1553 Comm Bus PIM-W14	System	Maintenance	30	13.61	6.77	0.1917					MLE	Internal	External						C2			
1553 Comm Bus PIM-W14	System	Maintenance	30	13.61	6.77	0.1917					MLE	Internal	External						C2			
1553 Comm Bus PIM-W14	System	Maintenance	30	13.61	6.77	0.1917					MLE	Internal	External						C2			
1553 Comm Bus PIM-W19	System	Maintenance	30	13.61	6.77	0.1917					MLE	Internal	External						C2			
1553 Comm Bus PIM-W19	System	Maintenance	30	13.61	6.77	0.1917					MLE	Internal	External						C2			
1553 Comm Bus PIM-W19	System	Maintenance	30	13.61	6.77	0.1917					MLE	Internal	External						C2			
1553 Comm Bus PIM-W19	System	Maintenance	30	13.61	6.77	0.1917					MLE	Internal	External						C2			
1553 Comm Bus PIM-W2	System	Maintenance	30	13.61	6.77	0.1917					MLE	Internal	External						C2			
1553 Comm Bus PIM-W2	System	Maintenance	30	13.61	6.77	0.1917					MLE	Internal	External						C2			
1553 Comm Bus PIM-W2	System	Maintenance	30	13.61	6.77	0.1917					MLE	Internal	External						C2			
1553 Comm Bus PIM-W22	System	Maintenance	30	13.61	6.77	0.1917					MLE	Internal	External						C2			
1553 Comm Bus PIM-W22	System	Maintenance	30	13.61	6.77	0.1917					MLE	Internal	External						C2			
1553 Comm Bus PIM-W22	System	Maintenance	30	13.61	6.77	0.1917					MLE	Internal	External						C2			
1553 Comm Bus PIM-W22	System	Maintenance	30	13.61	6.77	0.1917					MLE	Internal	External						C2			
1553 Comm Bus PIM-W30	System	Maintenance	30	13.61	6.77	0.1917					MLE	Internal	External						C2			
1553 Comm Bus PIM-W30	System	Maintenance	30	13.61	6.77	0.1917					MLE	Internal	External						C2			
1553 Comm Bus PIM-W30	System	Maintenance	30	13.61	6.77	0.1917					MLE	Internal	External						C2			
1553 Comm Bus PIM-W30	System	Maintenance	30	13.61	6.77	0.1917					MLE	Internal	External						C2			
1553 Comm Bus PIM-W7	System	Maintenance	30	13.61	6.77	0.1917					MLE	Internal	External						C2			
1553 Comm Bus PIM-W7	System	Maintenance	30	13.61	6.77	0.1917					MLE	Internal	External						C2			
1553 Comm Bus PIM-W7	System	Maintenance	30	13.61	6.77	0.1917					MLE	Internal	External						C2			
1553 Comm Bus PIM-W7	System	Maintenance	30	13.61	6.77	0.1917					MLE	Internal	External						C2			
2nd Power PIM-W26	System	Maintenance	30	13.61	6.77	0.1917					MLE	Internal	External						C2			
2nd Power PIM-W26	System	Maintenance	30	13.61	6.77	0.1917					MLE	Internal	External						C2			
2nd Power PIM-W26	System	Maintenance	30	13.61	6.77	0.1917					MLE	Internal	External						C2			
2nd Power PIM-W27	System	Maintenance	30	13.61	6.77	0.1917					MLE	Internal	External						C2			
2nd Power PIM-W27	System	Maintenance	30	13.61	6.77	0.1917					MLE	Internal	External						C2			
2nd Power PIM-W27	System	Maintenance	30	13.61	6.77	0.1917					MLE	Internal	External						C2			
2nd Power PIM-W27	System	Maintenance	30	13.61	6.77	0.1917					MLE	Internal	External						C2			
2nd Power PIM-W3	System	Maintenance	30	13.61	6.77	0.1917					MLE	Internal	External						C2			
2nd Power PIM-W3	System	Maintenance	30	13.61	6.77	0.1917					MLE	Internal	External						C2			
2nd Power PIM-W3	System	Maintenance	30	13.61	6.77	0.1917					MLE	Internal	External						C2			
2nd Power PIM-W3	System	Maintenance	30	13.61	6.77	0.1917					MLE	Internal	External						C2			
2nd Power PIM-W6	System	Maintenance	30	13.61	6.77	0.1917					MLE	Internal	External						C2			
2nd Power PIM-W6	System	Maintenance	30	13.61	6.77	0.1917					MLE	Internal	External						C2			
2nd Power PIM-W6	System	Maintenance	30	13.61	6.77	0.1917					MLE	Internal	External						C2			
2nd Power PIM-W6	System	Maintenance	30	13.61	6.77	0.1917					MLE	Internal	External						C2			
Cable TCS Bridge	System	Maintenance	30	13.61	6.77	0.1917					MLE	Internal	External						C2			
DC Cntrl & 2nd Pwr PIM-W13	System	Maintenance	30	13.61	6.77	0.1917					MLE	Internal	External						C2			
DC Cntrl & 2nd Pwr PIM-W13	System	Maintenance	30	13.61	6.77	0.1917					MLE	Internal	External						C2			
DC Cntrl & 2nd Pwr PIM-W13	System	Maintenance	30	13.61	6.77	0.1917					MLE	Internal	External						C2			
DC Cntrl & 2nd Pwr PIM-W13	System	Maintenance	30	13.61	6.77	0.1917					MLE	Internal	External						C2			
DC Cntrl & 2nd Pwr PIM-W16	System	Maintenance	30	13.61	6.77	0.1917					MLE	Internal	External						C2			
DC Cntrl & 2nd Pwr PIM-W16	System	Maintenance	30	13.61	6.77	0.1917					MLE	Internal	External						C2			
DC Cntrl & 2nd Pwr PIM-W16	System	Maintenance	30	13.61	6.77	0.1917					MLE	Internal	External						C2			
DC Cntrl & 2nd Pwr PIM-W20	System	Maintenance	30	13.61	6.77	0.1917					MLE	Internal	External						C2			
DC Cntrl & 2nd Pwr PIM-W20	System	Maintenance	30	13.61	6.77	0.1917					MLE	Internal	External						C2			
DC Cntrl & 2nd Pwr PIM-W20	System	Maintenance	30	13.61	6.77	0.1917					MLE	Internal	External						C2			
DC Cntrl & 2nd Pwr PIM-W20	System	Maintenance	30	13.61	6.77	0.1917					MLE	Internal	External						C2			
DC Cntrl & 2nd Pwr PIM-W4	System	Maintenance	30	13.61	6.77	0.1917					MLE	Internal	External						C2			

Cargo			Mass		Volume		Dimensions					Location										
Name	Major Type	Minor Type	Total Mass (no accommodations) lbs	Total Mass (no accommodations) kg	Total Volume (no accommodations) ft^3	Total Volume (no accommodations) m^3	length (external only) inches	Width (external only) inches	height (external only) inches	or Bag Size	Subcarrier/FSE	Preferred Launch Location	On-Orbit Location	ISS Transfer Restrictions	Resources Required	Environ constraints - Prelaunch, Pad, Ascent, Vehicle on-orbit,	Ascent/Return Qualification Limits	Hazard Type	Criticality Level	Response Period	Transfer Location	
DC Cntrl & 2nd Pwr PIM-W4	System	Maintenance	30	13.61	6.77	0.1917					MLE	Internal	External						C2			
DC Cntrl & 2nd Pwr PIM-W4	System	Maintenance	30	13.61	6.77	0.1917					MLE	Internal	External						C2			
DC Cntrl & 2nd Pwr PIM-W5	System	Maintenance	30	13.61	6.77	0.1917					MLE	Internal	External						C2			
DC Cntrl & 2nd Pwr PIM-W5	System	Maintenance	30	13.61	6.77	0.1917					MLE	Internal	External						C2			
DC Cntrl & 2nd Pwr PIM-W5	System	Maintenance	30	13.61	6.77	0.1917					MLE	Internal	External						C2			
DC Cntrl & Prim. Pwr PIM-W15	System	Maintenance	30	13.61	6.77	0.1917					MLE	Internal	External						C2			
DC Cntrl & Prim. Pwr PIM-W15	System	Maintenance	30	13.61	6.77	0.1917					MLE	Internal	External						C2			
DC Cntrl & Prim. Pwr PIM-W15	System	Maintenance	30	13.61	6.77	0.1917					MLE	Internal	External						C2			
DC Cntrl & Prim. Pwr PIM-W24	System	Maintenance	30	13.61	6.77	0.1917					MLE	Internal	External						C2			
DC Cntrl & Prim. Pwr PIM-W24	System	Maintenance	30	13.61	6.77	0.1917					MLE	Internal	External						C2			
DC Cntrl & Prim. Pwr PIM-W24	System	Maintenance	30	13.61	6.77	0.1917					MLE	Internal	External						C2			
DC Cntrl Pwr PIM-W17	System	Maintenance	30	13.61	6.77	0.1917					MLE	Internal	External						C2			
DC Cntrl Pwr PIM-W17	System	Maintenance	30	13.61	6.77	0.1917					MLE	Internal	External						C2			
DC Cntrl Pwr PIM-W17	System	Maintenance	30	13.61	6.77	0.1917					MLE	Internal	External						C2			
DC Cntrl Pwr PIM-W17	System	Maintenance	30	13.61	6.77	0.1917					MLE	Internal	External						C2			
MSC Pwr PIM-W10	System	Maintenance	30	13.61	6.77	0.1917					MLE	Internal	External						C2			
MSC Pwr PIM-W10	System	Maintenance	30	13.61	6.77	0.1917					MLE	Internal	External						C2			
MSC Pwr PIM-W10	System	Maintenance	30	13.61	6.77	0.1917					MLE	Internal	External						C2			
MSC Pwr PIM-W10	System	Maintenance	30	13.61	6.77	0.1917					MLE	Internal	External						C2			
MSC Pwr PIM-W9	System	Maintenance	30	13.61	6.77	0.1917					MLE	Internal	External						C2			
MSC Pwr PIM-W9	System	Maintenance	30	13.61	6.77	0.1917					MLE	Internal	External						C2			
MSC Pwr PIM-W9	System	Maintenance	30	13.61	6.77	0.1917					MLE	Internal	External						C2			
MSC Pwr PIM-W9	System	Maintenance	30	13.61	6.77	0.1917					MLE	Internal	External						C2			
Primary Pwr PIM W23	System	Maintenance	30	13.61	6.77	0.1917					MLE	Internal	External						C2			
Primary Pwr PIM W23	System	Maintenance	30	13.61	6.77	0.1917					MLE	Internal	External						C2			
Primary Pwr PIM W23	System	Maintenance	30	13.61	6.77	0.1917					MLE	Internal	External						C2			
Primary Pwr PIM W23	System	Maintenance	30	13.61	6.77	0.1917					MLE	Internal	External						C2			
Primary Pwr PIM-W1	System	Maintenance	30	13.61	6.77	0.1917					MLE	Internal	External						C2			
Primary Pwr PIM-W1	System	Maintenance	30	13.61	6.77	0.1917					MLE	Internal	External						C2			
Primary Pwr PIM-W1	System	Maintenance	30	13.61	6.77	0.1917					MLE	Internal	External						C2			
Primary Pwr PIM-W1	System	Maintenance	30	13.61	6.77	0.1917					MLE	Internal	External						C2			
Primary Pwr PIM-W11	System	Maintenance	30	13.61	6.77	0.1917					MLE	Internal	External						C2			
Primary Pwr PIM-W11	System	Maintenance	30	13.61	6.77	0.1917					MLE	Internal	External						C2			
Primary Pwr PIM-W11	System	Maintenance	30	13.61	6.77	0.1917					MLE	Internal	External						C2			
Primary Pwr PIM-W111	System	Maintenance	30	13.61	6.77	0.1917					MLE	Internal	External						C2			
Primary Pwr PIM-W111	System	Maintenance	30	13.61	6.77	0.1917					MLE	Internal	External						C2			
Primary Pwr PIM-W111	System	Maintenance	30	13.61	6.77	0.1917					MLE	Internal	External						C2			
Primary Pwr PIM-W118	System	Maintenance	30	13.61	6.77	0.1917					MLE	Internal	External						C2			
Primary Pwr PIM-W118	System	Maintenance	30	13.61	6.77	0.1917					MLE	Internal	External						C2			
Primary Pwr PIM-W118	System	Maintenance	30	13.61	6.77	0.1917					MLE	Internal	External						C2			
Primary Pwr PIM-W118	System	Maintenance	30	13.61	6.77	0.1917					MLE	Internal	External						C2			
Primary Pwr PIM-W18	System	Maintenance	30	13.61	6.77	0.1917					MLE	Internal	External						C2			
Primary Pwr PIM-W18	System	Maintenance	30	13.61	6.77	0.1917					MLE	Internal	External						C2			
Primary Pwr PIM-W18	System	Maintenance	30	13.61	6.77	0.1917					MLE	Internal	External						C2			
Primary Pwr PIM-W25	System	Maintenance	30	13.61	6.77	0.1917					MLE	Internal	External						C2			
Primary Pwr PIM-W25	System	Maintenance	30	13.61	6.77	0.1917					MLE	Internal	External						C2			
Primary Pwr PIM-W25	System	Maintenance	30	13.61	6.77	0.1917					MLE	Internal	External						C2			
Primary Pwr PIM-W25	System	Maintenance	30	13.61	6.77	0.1917					MLE	Internal	External						C2			
TV Camera Interface Converter (TVCIC)	System	Maintenance	30	13.61	0.43	0.0122	13.2	8.1	6.9	1/2 CTB	MLE	Internal	External						C2R			
TV Camera Interface Converter (TVCIC)	System	Maintenance	30	13.61	0.43	0.0122	13.2	8.1	6.9	1/2 CTB	MLE	Internal	External						C2R			
TV Camera Interface Converter (TVCIC)	System	Maintenance	30	13.61	0.43	0.0122	13.2	8.1	6.9	1/2 CTB	MLE	Internal	External						C2R			
MDM-04 EXTERNAL CHASSIS	System	Maintenance	29.2	13.24	0.63	0.0178	14.9	8	9.2	1/2 CTB	MLE	Internal	External						C1			
MDM-04 EXTERNAL CHASSIS	System	Maintenance	29.2	13.24	0.63	0.0178	14.9	8	9.2	1/2 CTB	MLE	Internal	External						C1			
MDM-04 EXTERNAL CHASSIS	System	Maintenance	29.2	13.24	0.63	0.0178	14.9	8	9.2	1/2 CTB	MLE	Internal	External						C1			

Cargo			Mass		Volume		Dimensions					Location										
Name	Major Type	Minor Type	Total Mass (no accommodations) lbs	Total Mass (no accommodations) kg	Total Volume (no accommodations) ft^3	Total Volume (no accommodations) m^3	length (external only) inches	Width (external only) inches	height (external only) inches	or Bag Size	Subcarrier/FSE	Preferred Launch Location	On-Orbit Location	ISS Transfer Restrictions	Resources Required	Environ constraints - Prelaunch, Pad, Ascent, Vehicle on-orbit,	Ascent/Return Qualification Limits	Hazard Type	Criticality Level	Response Period	Transfer Location	
MDM-04 EXTERNAL CHASSIS	System	Maintenance	29.2	13.24	0.63	0.0178	14.9	8	9.2	1/2 CTB	MLE	Internal	External						C1			
MDM-04 EXTERNAL CHASSIS	System	Maintenance	29.2	13.24	0.63	0.0178	14.9	8	9.2	1/2 CTB	MLE	Internal	External						C1			
MDM-04 EXTERNAL CHASSIS	System	Maintenance	29.2	13.24	0.63	0.0178	14.9	8	9.2	1/2 CTB	MLE	Internal	External						C1			
MDM-04 EXTERNAL CHASSIS	System	Maintenance	29.2	13.24	0.63	0.0178	14.9	8	9.2	1/2 CTB	MLE	Internal	External						C1			
MDM-04 EXTERNAL CHASSIS	System	Maintenance	29.2	13.24	0.63	0.0178	14.9	8	9.2	1/2 CTB	MLE	Internal	External						C1			
MDM-16 INTERNAL CHASSIS	System	Maintenance	28.7	13.02	1.05	0.0297	13.3	14.4	9.5	1 CTB	MLE	Internal	Internal						C1			
MDM-16 INTERNAL CHASSIS	System	Maintenance	28.7	13.02	1.05	0.0297	13.3	14.4	9.5	1 CTB	MLE	Internal	Internal						C1			
MDM-16 INTERNAL CHASSIS	System	Maintenance	28.7	13.02	1.05	0.0297	13.3	14.4	9.5	1 CTB	MLE	Internal	Internal						C1			
MDM-16 INTERNAL CHASSIS	System	Maintenance	28.7	13.02	1.05	0.0297	13.3	14.4	9.5	1 CTB	MLE	Internal	Internal						C1			
MDM-16 INTERNAL CHASSIS	System	Maintenance	28.7	13.02	1.05	0.0297	13.3	14.4	9.5	1 CTB	MLE	Internal	Internal						C1			
MDM-16 INTERNAL CHASSIS	System	Maintenance	28.7	13.02	1.05	0.0297	13.3	14.4	9.5	1 CTB	MLE	Internal	Internal						C1			
MDM-16 INTERNAL CHASSIS	System	Maintenance	28.7	13.02	1.05	0.0297	13.3	14.4	9.5	1 CTB	MLE	Internal	Internal						C1			
MDM-16 INTERNAL CHASSIS	System	Maintenance	28.7	13.02	1.05	0.0297	13.3	14.4	9.5	1 CTB	MLE	Internal	Internal						C1			
CATALYTIC OXIDIZER	System	Maintenance	27.83	12.62	0.98	0.0278	9.5	9.7	16.1	1 CTB	MLE	Internal	Internal						C1			
AVIONICS AIR ASSEMBLY	System	Maintenance	27.6	12.52	1.17	0.0331	23.5	11	7.8	3 CTB	MLE	Internal	Internal						C1S			
AVIONICS AIR ASSEMBLY	System	Maintenance	27.6	12.52	1.17	0.0331	23.5	11	7.8	3 CTB	MLE	Internal	Internal						C1S			
In-flight Refill Unit (IRU)	System	Maintenance	27	12.25	1.1	0.0311	12.3	14.19	10.85	2 CTB	MLE	Internal	Internal						C2R			
WATER SEPARATOR	System	Maintenance	26.3	11.93	2.02	0.0572	14.6	14	17.1	2 CTB	MLE	Internal	Internal						C1R			
EMU Don/Doff Assembly (EDDA)	System	Maintenance	25	11.34	1.85	0.0524	2	38	42	1/2 CTB	MLE	Internal	Internal						C2R			
Laptop (Portable Computer System)	System	Maintenance	25	11.34	0.2	0.0057	12.99	2.36	11.42	1 CTB	MLE	Internal	Internal						C1R			
Laptop (Portable Computer System)	System	Maintenance	25	11.34	0.2	0.0057	12.99	2.36	11.42	1 CTB	MLE	Internal	Internal						C1R			
Control Electronics Unit	System	Maintenance	24.9	11.29	0.78	0.0221	14.4	12.5	7.5	1 CTB	MLE	Internal	Internal						C1P			
Control Electronics Unit	System	Maintenance	24.9	11.29	0.78	0.0221	14.4	12.5	7.5	1 CTB	MLE	Internal	Internal						C1P			
LUMINAIRE, CETA	System	Maintenance	24	10.89	1	0.0283	12	11.4	12.6	2 CTB	MLE	Internal	External						C2R			
LUMINAIRE, CETA	System	Maintenance	24	10.89	1	0.0283	12	11.4	12.6	2 CTB	MLE	Internal	External						C2R			
LUMINAIRE, CETA	System	Maintenance	24	10.89	1	0.0283	12	11.4	12.6	2 CTB	MLE	Internal	External						C2R			
LUMINAIRE, CETA	System	Maintenance	24	10.89	1	0.0283	12	11.4	12.6	2 CTB	MLE	Internal	External						C2R			
Panel A, Electrical Assy (W11)	System	Maintenance	23	10.43	10.76	0.3047	31	20	30	M01	MLE	Internal	External	APAS					C2R			
Panel B, Electrical Assy (W12)	System	Maintenance	23	10.43	8.85	0.2506	25.5	20	30	Rack	MLE	Internal	External						C2R			
Plate, Connector Assy (W9 & W10)	System	Maintenance	23	10.43	6.94	0.1965	20	20	30	M01	MLE	Internal	External						C2R			
Bracket, Connector (W19)	System	Maintenance	23	10.43	4.63	0.1311	20	20	20	M01	MLE	Internal	External						C2R			
Video Switch Unit (VSU)	System	Maintenance	22.58	10.24	0.63	0.0178	5.75	11.5	16.5	1 CTB	MLE	Internal	Internal						C2R			
Video Switch Unit (VSU)	System	Maintenance	22.58	10.24	0.63	0.0178	5.75	11.5	16.5	1 CTB	MLE	Internal	Internal						C2R			
MDM-04 - external MDM-P1-1	System	Maintenance	22.5	10.21	0.63	0.0178	14.9	8	9.2	1/2 CTB	MLE	Internal	External						C1R			
MDM-04 - external MDM-P3-1	System	Maintenance	22.5	10.21	0.63	0.0178	14.9	8	9.2	1/2 CTB	MLE	Internal	External						C1R			
MDM-04 - external MDM-P3-2	System	Maintenance	22.5	10.21	0.63	0.0178	14.9	8	9.2	1/2 CTB	MLE	Internal	External						C1R			
MDM-04 - external MDM-S1-2	System	Maintenance	22.5	10.21	0.63	0.0178	14.9	8	9.2	1/2 CTB	MLE	Internal	External						C1R			
MDM-04 - external MDM-S3-1	System	Maintenance	22.5	10.21	0.63	0.0178	14.9	8	9.2	1/2 CTB	MLE	Internal	External						C1R			
MDM-04 - external MDM-S3-2	System	Maintenance	22.5	10.21	0.63	0.0178	14.9	8	9.2	1/2 CTB	MLE	Internal	External						C1R			
MDM-04 - external PVCU-1A	System	Maintenance	22.5	10.21	0.42	0.0119	13.3	6	9.2	1/2 CTB	MLE	Internal	External						C1R			
MDM-04 - external PVCU-2A	System	Maintenance	22.5	10.21	0.42	0.0119	13.3	6	9.2	1/2 CTB	MLE	Internal	External						C1R			
MDM-04 - external PVCU-2B	System	Maintenance	22.5	10.21	0.42	0.0119	13.3	6	9.2	1/2 CTB	MLE	Internal	External						C1R			
MDM-04 - external PVCU-4B	System	Maintenance	22.5	10.21	0.42	0.0119	13.3	6	9.2	1/2 CTB	MLE	Internal	External						C1R			
COLDPLATE - 10	System	Maintenance	22.5	10.21	0.22	0.0062	60	10.3	2	Rack	MLE	Internal	Internal						C1			
MDM-04 - external MDM-PTR	System	Maintenance	22	9.98	0.63	0.0178	14.9	8	9.2	1/2 CTB	MLE	Internal	External						C1R			
MDM-04 - external MDM-STR	System	Maintenance	22	9.98	0.63	0.0178	14.9	8	9.2	1/2 CTB	MLE	Internal	External						C1R			
Amplifier Module	System	Maintenance	21.9	9.93	0.92	0.0261	5.5	27.6	10.5	1 CTB	MLE	Internal	External						C1R			
MDM-04 - internal MDM-FGB-1	System	Maintenance	21.6	9.80	0.42	0.0119	13.3	6	9.2	1/2 CTB	MLE	Internal	Internal						C1R			
MDM-04 - internal MDM-FGB-2	System	Maintenance	21.6	9.80	0.42	0.0119	13.3	6	9.2	1/2 CTB	MLE	Internal	Internal						C1R			
Signal Conditioner	System	Maintenance	21.15	9.59	0.75	0.0212	18	11.2	6.4	1 CTB	MLE	Internal	External						C2			
MDM-10 - EXTERNAL CHASSIS	System	Maintenance	21	9.53	1.13	0.032	14.9	14.2	9.2	1 CTB	MLE	Internal	External						C1			
MDM-10 - EXTERNAL CHASSIS	System	Maintenance	21	9.53	1.13	0.032	14.9	14.2	9.2	1 CTB	MLE	Internal	External						C1			
MDM-10 - EXTERNAL CHASSIS	System	Maintenance	21	9.53	1.13	0.032	14.9	14.2	9.2	1 CTB	MLE	Internal	External						C1			
MDM-10 - EXTERNAL CHASSIS	System	Maintenance	21	9.53	1.13	0.032	14.9	14.2	9.2	1 CTB	MLE	Internal	External						C1			

Cargo			Mass		Volume		Dimensions					Location										
Name	Major Type	Minor Type	Total Mass (no accommodations) lbs	Total Mass (no accommodations) kg	Total Volume (no accommodations) ft^3	Total Volume (no accommodations) m^3	length (external only) inches	Width (external only) inches	height (external only) inches	or Bag Size	Subcarrier/FSE	Preferred Launch Location	On-Orbit Location	ISS Transfer Restrictions	Resources Required	Environ constraints - Prelaunch, Pad, Ascent, Vehicle on-orbit,	Ascent/Return Qualification Limits	Hazard Type	Criticality Level	Response Period	Transfer Location	
MDM-10 - EXTERNAL CHASSIS	System	Maintenance	21	9.53	1.13	0.032	14.9	14.2	9.2	1 CTB	MLE	Internal	External						C1			
MDM-10 - EXTERNAL CHASSIS	System	Maintenance	21	9.53	1.13	0.032	14.9	14.2	9.2	1 CTB	MLE	Internal	External						C1			
MDM-04 - external PVCU-1B	System	Maintenance	20.8	9.43	0.42	0.0119	13.3	6	9.2	1/2 CTB	MLE	Internal	External						C1R			
MDM-04 - external PVCU-3A	System	Maintenance	20.8	9.43	0.42	0.0119	13.3	6	9.2	1/2 CTB	MLE	Internal	External						C1R			
MDM-04 - external PVCU-3B	System	Maintenance	20.8	9.43	0.42	0.0119	13.3	6	9.2	1/2 CTB	MLE	Internal	External						C1R			
MDM-04 - external PVCU-4A	System	Maintenance	20.8	9.43	0.42	0.0119	13.3	6	9.2	1/2 CTB	MLE	Internal	External						C1R			
Regenerative Heat Exchanger	System	Maintenance	20.73	9.40	0.29	0.0082	5.8	17.8	4.8	1 CTB	MLE	Internal	Internal						C1S			
GAS TRAP	System	Maintenance	20.2	9.16	0.19	0.0054	15.5	4.6	4.6	1/2 CTB	MLE	Internal	Internal						C1R			
GAS TRAP	System	Maintenance	20.2	9.16	0.19	0.0054	15.5	4.6	4.6	1/2 CTB	MLE	Internal	Internal						C1R			
SPCU CL Umbilical Set	System	Maintenance	20	9.07	0.99	0.028					MLE	Internal	Internal						C1R			
Fill/Drain QD Symetrics, IEA	System	Maintenance	20	9.07	0.04	0.0011					MLE	Internal	External						C2			
Fill/Drain QD Symetrics, IEA	System	Maintenance	20	9.07	0.04	0.0011					MLE	Internal	External						C2			
Fill/Drain QD Symetrics, IEA	System	Maintenance	20	9.07	0.04	0.0011					MLE	Internal	External						C2			
Fill/Drain QD Symetrics, IEA	System	Maintenance	20	9.07	0.04	0.0011					MLE	Internal	External						C2			
Fluid Line Assembly Internal	System	Maintenance	20	9.07	0.04	0.0011					MLE	Internal	Internal						C2			
Fluid Line Assembly Internal	System	Maintenance	20	9.07	0.04	0.0011					MLE	Internal	Internal						C2			
Fluid Line Assembly Internal	System	Maintenance	20	9.07	0.04	0.0011					MLE	Internal	Internal						C2			
NH3 Tube Lines, IEA	System	Maintenance	20	9.07	0.04	0.0011					MLE	Internal	External						C2			
NH3 Tube Lines, IEA	System	Maintenance	20	9.07	0.04	0.0011					MLE	Internal	External						C2			
NH3 Tube Lines, IEA	System	Maintenance	20	9.07	0.04	0.0011					MLE	Internal	External						C2			
NH3 Tube Lines, IEA	System	Maintenance	20	9.07	0.04	0.0011					MLE	Internal	External						C2			
PFCS Passive Half FQDC	System	Maintenance	20	9.07	0.04	0.0011					MLE	Internal	External						C2			
PFCS Passive Half FQDC	System	Maintenance	20	9.07	0.04	0.0011					MLE	Internal	External						C2			
PFCS Passive Half FQDC	System	Maintenance	20	9.07	0.04	0.0011					MLE	Internal	External						C2			
PFCS Passive Half FQDC	System	Maintenance	20	9.07	0.04	0.0011					MLE	Internal	External						C2			
Radiator Passive Half FQDC	System	Maintenance	20	9.07	0.04	0.0011					MLE	Internal	External						C2			
Radiator Passive Half FQDC	System	Maintenance	20	9.07	0.04	0.0011					MLE	Internal	External						C2			
Radiator Passive Half FQDC	System	Maintenance	20	9.07	0.04	0.0011					MLE	Internal	External						C2			
Radiator Passive Half FQDC	System	Maintenance	20	9.07	0.04	0.0011					MLE	Internal	External						C2			
COLDPLATE - 9	System	Maintenance	18.8	8.53	0.62	0.0176	51.4	10.3	2.01	Rack	MLE	Internal	Internal						C1			
Color Television Camera (CTVC)	System	Maintenance	18.3	8.30	0.35	0.0099	17.4	5.9	5.9	1 CTB	MLE	Internal	External						C2R			
Color Television Camera (CTVC)	System	Maintenance	18.3	8.30	0.35	0.0099	17.4	5.9	5.9	1 CTB	MLE	Internal	External						C2R			
Color Television Camera (CTVC)	System	Maintenance	18.3	8.30	0.35	0.0099	17.4	5.9	5.9	1 CTB	MLE	Internal	External						C2R			
COLDPLATE - 1	System	Maintenance	18.1	8.21	6.68	0.1892	30	17.5	22	M01	MLE	Internal	Internal						C1			
Tissue Eqvt Proportional Counter (TEPC)	System	Maintenance	18	8.16	1.67	0.0473	20	12	12	3 CTB	MLE	Internal	Internal						C3			
Color Television Camera (CTVC)	System	Maintenance	18	8.16	0.35	0.0099	17.4	5.9	5.9	1 CTB	MLE	Internal	External						C2R			
CDN REMOTE POWER CONTROL MODULE	System	Maintenance	18	8.16	0.32	0.0091	11	9	5.5	1/2 CTB	MLE	Internal	External						C1R			
DRIVE MECHANISM ASSEMBLY	System	Maintenance	17.59	7.98	0.73	0.0207	26.5	26.5	2.3	M01	MLE	Internal	Internal						C1R			
DRIVE MECHANISM ASSEMBLY	System	Maintenance	17.59	7.98	0.73	0.0207	26.5	26.5	2.3	M01	MLE	Internal	Internal						C1R			
ACS/UCS Audio Interface Unit (AUAI)	System	Maintenance	17.1	7.76	0.39	0.011	11.5	10.2	5.8	1 CTB	MLE	Internal	Internal						C3			
Suit Dryer Assembly	System	Maintenance	17	7.71	0.263	0.0074	5	7	13	1/2 CTB	MLE	Internal	Internal						C1R			
Internal Audio Controller (IAC)	System	Maintenance	16.44	7.46	0.64	0.0181	11.5	16.5	5.8	1 CTB	MLE	Internal	Internal						C1SR			
TEMPERATURE CONTROL CHECK VALVE	System	Maintenance	16.43	7.45	0.25	0.0071	15	7.5	3.8	1/2 CTB	MLE	Internal	Internal						C1R			
Audio Terminal Unit (ATU)	System	Maintenance	16.3	7.39	0.63	0.0178	11.7	10.7	8.7	1 CTB	MLE	Internal	Internal						C1SR			
Audio Terminal Unit (ATU)	System	Maintenance	16.3	7.39	0.63	0.0178	11.7	10.7	8.7	1 CTB	MLE	Internal	Internal						C1SR			
Audio Terminal Unit (ATU)	System	Maintenance	16.3	7.39	0.63	0.0178	11.7	10.7	8.7	1 CTB	MLE	Internal	Internal						C1SR			
Audio Terminal Unit (ATU)	System	Maintenance	16.3	7.39	0.63	0.0178	11.7	10.7	8.7	1 CTB	MLE	Internal	Internal						C1SR			
Audio Terminal Unit (ATU)	System	Maintenance	16.3	7.39	0.63	0.0178	11.7	10.7	8.7	1 CTB	MLE	Internal	Internal						C1SR			
PORTABLE FIRE EXTINGUISHER ASSY	System	Maintenance	16.28	7.38	1.41	0.0399	19.1	12.55	10.26	2 CTB	MLE	Internal	Internal						C1			
PORTABLE FIRE EXTINGUISHER ASSY	System	Maintenance	16.28	7.38	1.41	0.0399	19.1	12.55	10.26	2 CTB	MLE	Internal	Internal						C1			
PORTABLE FIRE EXTINGUISHER ASSY	System	Maintenance	16.28	7.38	1.41	0.0399	19.1	12.55	10.26	2 CTB	MLE	Internal	Internal						C1			
PORTABLE FIRE EXTINGUISHER ASSY	System	Maintenance	16.28	7.38	1.41	0.0399	19.1	12.55	10.26	2 CTB	MLE	Internal	Internal						C1			
PORTABLE FIRE EXTINGUISHER ASSY	System	Maintenance	16.28	7.38	1.41	0.0399	19.1	12.55	10.26	2 CTB	MLE	Internal	Internal						C1			

Cargo			Mass		Volume		Dimensions					Location										
Name	Major Type	Minor Type	Total Mass (no accommodations) lbs	Total Mass (no accommodations) kg	Total Volume (no accommodations) ft^3	Total Volume (no accommodations) m^3	length (external only) inches	Width (external only) inches	height (external only) inches	or Bag Size	Subcarrier/FSE	Preferred Launch Location	On-Orbit Location	ISS Transfer Restrictions	Resources Required	Environ constraints - Prelaunch, Pad, Ascent, Vehicle on-orbit,	Ascent/Return Qualification Limits	Hazard Type	Criticality Level	Response Period	Transfer Location	
CL Depress/Repress Panel	System	Maintenance	16	7.26	0.1	0.0028					MLE	Internal	Internal						C1R			
EL Depress/Repress Panel	System	Maintenance	16	7.26	0.1	0.0028					MLE	Internal	Internal						C1R			
Bearing Assembly, Trundle	System	Maintenance	16	7.26	0.04	0.0011	8	4	2	1/2 CTB	MLE	Internal	External						C1R			
Bearing Assembly, Trundle	System	Maintenance	16	7.26	0.04	0.0011	8	4	2	1/2 CTB	MLE	Internal	External						C1R			
Thermostat Assembly	System	Maintenance	15	6.80	0.77	0.0218					MLE	Internal	External						C2			
Thermostat Assembly	System	Maintenance	15	6.80	0.77	0.0218					MLE	Internal	External						C2			
Thermostat Assembly	System	Maintenance	15	6.80	0.77	0.0218					MLE	Internal	External						C2			
Thermostat Assembly	System	Maintenance	15	6.80	0.77	0.0218					MLE	Internal	External						C2			
NITROGEN INTERFACE ASSY.	System	Maintenance	14.96	6.79	0.33	0.0093	15.6	4.2	8.7	1/2 CTB	MLE	Internal	Internal						C1P			
NITROGEN INTERFACE ASSY.	System	Maintenance	14.96	6.79	0.33	0.0093	15.6	4.2	8.7	1/2 CTB	MLE	Internal	Internal						C1P			
FILTER ASSEMBLY	System	Maintenance	14.3	6.49	0.17	0.0048	15.9	4.3	4.3	1/2 CTB	MLE	Internal	Internal						C1R			
FILTER ASSEMBLY	System	Maintenance	14.3	6.49	0.17	0.0048	15.9	4.3	4.3	1/2 CTB	MLE	Internal	Internal						C1R			
COLDPLATE - 8	System	Maintenance	13.9	6.30	0.44	0.0125	37.3	10.3	2	Rack	MLE	Internal	Internal						C1			
COLDPLATE - 8	System	Maintenance	13.9	6.30	0.44	0.0125	37.3	10.3	2	Rack	MLE	Internal	Internal						C1			
VERIFICATION GAS ASSEMBLY	System	Maintenance	12.7	5.76	0.48	0.0136	12.2	7.8	8.8	1 CTB	MLE	Internal	Internal						C1R			
MDM-04 EXTERNAL CHASSIS	System	Maintenance	12.3	5.58	0.42	0.0119	13.3	6	9.2	1/2 CTB	MLE	Internal	External						C1			
MDM-04 EXTERNAL CHASSIS	System	Maintenance	12.3	5.58	0.42	0.0119	13.3	6	9.2	1/2 CTB	MLE	Internal	External						C1			
MDM-04 EXTERNAL CHASSIS	System	Maintenance	12.3	5.58	0.42	0.0119	13.3	6	9.2	1/2 CTB	MLE	Internal	External						C1			
MDM-04 EXTERNAL CHASSIS	System	Maintenance	12.3	5.58	0.42	0.0119	13.3	6	9.2	1/2 CTB	MLE	Internal	External						C1			
MDM-04 EXTERNAL CHASSIS	System	Maintenance	12.3	5.58	0.42	0.0119	13.3	6	9.2	1/2 CTB	MLE	Internal	External						C1			
MDM-04 EXTERNAL CHASSIS	System	Maintenance	12.3	5.58	0.42	0.0119	13.3	6	9.2	1/2 CTB	MLE	Internal	External						C1			
MDM-04 EXTERNAL CHASSIS	System	Maintenance	12.3	5.58	0.42	0.0119	13.3	6	9.2	1/2 CTB	MLE	Internal	External						C1			
MDM-04 INTERNAL CHASSIS	System	Maintenance	12.2	5.53	0.42	0.0119	13.3	6	9.2	1/2 CTB	MLE	Internal	Internal						C1			
MDM-04 INTERNAL CHASSIS	System	Maintenance	12.2	5.53	0.42	0.0119	13.3	6	9.2	1/2 CTB	MLE	Internal	Internal						C1			
VENT/RELIEF VALVE ASSEMBLY	System	Maintenance	11.7	5.31	4.45	0.126	26.4	15.4	19.02	M02	MLE	Internal	External						C1R			
Water Microbiology Kit	System	Maintenance	11.5	5.22	0.92	0.0261	16	9	11	1 CTB	MLE	Internal	Internal						C3			
3-Way Mix Valve	System	Maintenance	11.13	5.05	0.455	0.0129	13	5.5	11	1 CTB	MLE	Internal	Internal						C1S			
3-Way Mix Valve	System	Maintenance	11.13	5.05	0.455	0.0129	13	5.5	11	1 CTB	MLE	Internal	Internal						C1S			
Rack Ventilation Assembly	System	Maintenance	11	4.99	0.99	0.028					MLE	Internal	Internal						C1R			
RESPIRATORY SUPPORT PACK	System	Maintenance	11	4.99	0.4	0.0113	14.5	13.5	3.5	1 CTB	MLE	Internal	Internal						C3			
Compound Spec Anlzr - Cmbust Prods	System	Maintenance	11	4.99	0.28	0.0079	3.7	7.5	17.5	1/2 CTB	MLE	Internal	Internal						C3			
Compound Spec Anlzr - Cmbust Prods	System	Maintenance	11	4.99	0.28	0.0079	3.7	7.5	17.5	1/2 CTB	MLE	Internal	Internal						C3			
IMV VALVE	System	Maintenance	10.9	4.94	0.56	0.0159	10	7.7	12.6	1 CTB	MLE	Internal	Internal						C1R			
IMV VALVE	System	Maintenance	10.9	4.94	0.56	0.0159	10	7.7	12.6	1 CTB	MLE	Internal	Internal						C1R			
IMV VALVE	System	Maintenance	10.9	4.94	0.56	0.0159	10	7.7	12.6	1 CTB	MLE	Internal	Internal						C1R			
IMV VALVE	System	Maintenance	10.9	4.94	0.56	0.0159	10	7.7	12.6	1 CTB	MLE	Internal	Internal						C1R			
IMV VALVE	System	Maintenance	10.9	4.94	0.56	0.0159	10	7.7	12.6	1 CTB	MLE	Internal	Internal						C1R			
IMV VALVE	System	Maintenance	10.9	4.94	0.56	0.0159	10	7.7	12.6	1 CTB	MLE	Internal	Internal						C1R			
IMV VALVE	System	Maintenance	10.9	4.94	0.56	0.0159	10	7.7	12.6	1 CTB	MLE	Internal	Internal						C1R			
Audio Interface Unit (DAIU,RAIU)	System	Maintenance	10.75	4.88	0.39	0.011	11.5	10.2	5.8	1 CTB	MLE	Internal	Internal						C3			
Audio Interface Unit (DAIU,RAIU)	System	Maintenance	10.75	4.88	0.39	0.011	11.5	10.2	5.8	1 CTB	MLE	Internal	Internal						C3			
SPCU Electronics Package	System	Maintenance	10	4.54	0.99	0.028					MLE	Internal	Internal						C1R			
Camcorder	System	Maintenance	10	4.54	0.741	0.021	12.5	10.25	10	2 CTB	MLE	Internal	Internal						C3			
Water Regulation & Distribution	System	Maintenance	9.99	4.53	0.99	0.028					MLE	Internal	Internal						C1R			
RPC MODULE TYPE IV	System	Maintenance	9.83	4.46	0.13	0.0037	9.2	3.5	7.1	1/2 CTB	MLE	Internal	External						C1R			
RPC MODULE TYPE IV	System	Maintenance	9.83	4.46	0.13	0.0037	9.2	3.5	7.1	1/2 CTB	MLE	Internal	External						C1R			
RPC MODULE TYPE IV	System	Maintenance	9.83	4.46	0.13	0.0037	9.2	3.5	7.1	1/2 CTB	MLE	Internal	External						C1R			
RPC MODULE TYPE IV	System	Maintenance	9.83	4.46	0.13	0.0037	9.2	3.5	7.1	1/2 CTB	MLE	Internal	External						C1R			
RPC MODULE TYPE IV	System	Maintenance	9.83	4.46	0.13	0.0037	9.2	3.5	7.1	1/2 CTB	MLE	Internal	External						C1S			
RPC MODULE TYPE III	System	Maintenance	9.7	4.40	0.14	0.004	9.2	3.6	7.1	1/2 CTB	MLE	Internal	External						C1R			
RPC MODULE TYPE III	System	Maintenance	9.7	4.40	0.14	0.004	9.2	3.6	7.1	1/2 CTB	MLE	Internal	External						C1S			
RPC MODULE TYPE VI	System	Maintenance	9.66	4.38	0.14	0.004	9.2	3.6	7.1	1/2 CTB	MLE	Internal	External						C1R			
RPC MODULE TYPE VI	System	Maintenance	9.66	4.38	0.14	0.004	9.2	3.6	7.1	1/2 CTB	MLE	Internal	External						C1S			

Cargo			Mass		Volume		Dimensions					Location										
Name	Major Type	Minor Type	Total Mass (no accommodations) lbs	Total Mass (no accommodations) kg	Total Volume (no accommodations) ft^3	Total Volume (no accommodations) m^3	length (external only) inches	Width (external only) inches	height (external only) inches	or Bag Size	Subcarrier/FSE	Preferred Launch Location	On-Orbit Location	ISS Transfer Restrictions	Resources Required	Environ constraints - Prelaunch, Pad, Ascent, Vehicle on-orbit,	Ascent/Return Qualification Limits	Hazard Type	Criticality Level	Response Period	Transfer Location	
RPC MODULE TYPE II	System	Maintenance	9.63	4.37	0.14	0.004	9.2	3.6	7.1	1/2 CTB	MLE	Internal	External						C1R			
RPC MODULE TYPE II	System	Maintenance	9.63	4.37	0.14	0.004	9.2	3.6	7.1	1/2 CTB	MLE	Internal	External						C1R			
RPC MODULE TYPE II	System	Maintenance	9.63	4.37	0.14	0.004	9.2	3.6	7.1	1/2 CTB	MLE	Internal	External						C1R			
RPC MODULE TYPE II	System	Maintenance	9.63	4.37	0.14	0.004	9.2	3.6	7.1	1/2 CTB	MLE	Internal	External						C1R			
RPC MODULE TYPE II	System	Maintenance	9.63	4.37	0.14	0.004	9.2	3.6	7.1	1/2 CTB	MLE	Internal	External						C1R			
RPC MODULE TYPE II	System	Maintenance	9.63	4.37	0.14	0.004	9.2	3.6	7.1	1/2 CTB	MLE	Internal	External						C1S			
RPC MODULE TYPE V	System	Maintenance	9.62	4.36	0.13	0.0037	3.54	9.18	6.88	1/2 CTB	MLE	Internal	External						C1R			
RPC MODULE TYPE V	System	Maintenance	9.62	4.36	0.13	0.0037	3.54	9.18	6.88	1/2 CTB	MLE	Internal	External						C1R			
RPC MODULE TYPE V	System	Maintenance	9.62	4.36	0.13	0.0037	3.54	9.18	6.88	1/2 CTB	MLE	Internal	External						C1R			
RPC MODULE TYPE V	System	Maintenance	9.62	4.36	0.13	0.0037	3.54	9.18	6.88	1/2 CTB	MLE	Internal	External						C1R			
RPC MODULE TYPE V	System	Maintenance	9.62	4.36	0.13	0.0037	3.54	9.18	6.88	1/2 CTB	MLE	Internal	External						C1R			
RPC MODULE TYPE V	System	Maintenance	9.62	4.36	0.13	0.0037	3.54	9.18	6.88	1/2 CTB	MLE	Internal	External						C1R			
RPC MODULE TYPE V	System	Maintenance	9.62	4.36	0.13	0.0037	3.54	9.18	6.88	1/2 CTB	MLE	Internal	External						C1R			
RPC MODULE TYPE V	System	Maintenance	9.62	4.36	0.13	0.0037	3.54	9.18	6.88	1/2 CTB	MLE	Internal	External						C1R			
RPC MODULE TYPE V	System	Maintenance	9.62	4.36	0.13	0.0037	3.54	9.18	6.88	1/2 CTB	MLE	Internal	External						C1S			
Audio Bus Coupler (ABC)	System	Maintenance	9.54	4.33	0.39	0.011	5.75	11.5	10.2	1 CTB	MLE	Internal	Internal						C1SR			
Audio Bus Coupler (ABC)	System	Maintenance	9.54	4.33	0.39	0.011	5.75	11.5	10.2	1 CTB	MLE	Internal	Internal						C1SR			
WINDOW SUBASSY, (INNER)	System	Maintenance	9.5	4.31	0.13	0.0037	11.8	11.8	2.1	1 CTB	MLE	Internal	Internal						C2R			
RHC ORU Assembly	System	Maintenance	9.37	4.25	0.4	0.0113	15.03	9.5	4.88	1/2 CTB	MLE	Internal	Internal						C1			
RHC ORU Assembly	System	Maintenance	9.37	4.25	0.4	0.0113	15.03	9.5	4.88	1/2 CTB	MLE	Internal	Internal						C1			
SORBENT BED	System	Maintenance	9.23	4.19	0.276	0.0078	14.8	6.3	8.2	1/2 CTB	MLE	Internal	Internal						C1			
Portable Breathing Aparatus	System	Maintenance	9.1	4.13	1	0.0283	0	0	0	1/2 CTB	MLE	Internal	Internal						C3			
Portable Breathing Aparatus	System	Maintenance	9.1	4.13	1	0.0283	0	0	0	1/2 CTB	MLE	Internal	Internal						C3			
Portable Breathing Aparatus	System	Maintenance	9.1	4.13	1	0.0283	0	0	0	1/2 CTB	MLE	Internal	Internal						C3			
RPC MODULE TYPE III	System	Maintenance	9.04	4.10	0.14	0.004	9.2	3.6	7.1	1/2 CTB	MLE	Internal	Internal						C1R			
Portable Light Power Module (PLPM)	System	Maintenance	9	4.08	1	0.0283					MLE	Internal	External						C2R			
IMV FAN ASSEMBLY	System	Maintenance	9	4.08	0.31	0.0088	8.9	8.98	6.68	1/2 CTB	MLE	Internal	Internal						C1R			
IMV FAN ASSEMBLY	System	Maintenance	9	4.08	0.31	0.0088	8.9	8.98	6.68	1/2 CTB	MLE	Internal	Internal						C1R			
IMV FAN ASSEMBLY	System	Maintenance	9	4.08	0.31	0.0088	8.9	8.98	6.68	1/2 CTB	MLE	Internal	Internal						C1R			
COLDPLATE ASSEMBLY	System	Maintenance	9	4.08	0.289	0.0082	29.7	7	2.4	M02/3 CTB	MLE	Internal	Internal						C1R			
RPC MODULE TYPE VI	System	Maintenance	8.98	4.07	0.13	0.0037	9.1	3.5	6.9	1/2 CTB	MLE	Internal	Internal						C1R			
RPC MODULE TYPE VI	System	Maintenance	8.98	4.07	0.13	0.0037	9.1	3.5	6.9	1/2 CTB	MLE	Internal	Internal						C1R			
RPC MODULE TYPE V	System	Maintenance	8.95	4.06	0.13	0.0037	3.54	9.07	6.88	1/2 CTB	MLE	Internal	Internal						C1R			
RPC MODULE TYPE V	System	Maintenance	8.95	4.06	0.13	0.0037	3.54	9.07	6.88	1/2 CTB	MLE	Internal	Internal						C1R			
RPC MODULE TYPE V	System	Maintenance	8.95	4.06	0.13	0.0037	3.54	9.07	6.88	1/2 CTB	MLE	Internal	Internal						C1R			
RPC MODULE TYPE V	System	Maintenance	8.95	4.06	0.13	0.0037	3.54	9.07	6.88	1/2 CTB	MLE	Internal	Internal						C1S			
ELECTRICAL INTERFACE BOX (EIB)	System	Maintenance	8.9	4.04	0.61	0.0173	13	9	9	1/2 CTB	MLE	Internal	Internal						C1R			
Common Video Interface Unit (CVIU)	System	Maintenance	8.86	4.02	0.44	0.0125	12	8	8	1 CTB	MLE	Internal	Internal						C2R			
Common Video Interface Unit (CVIU)	System	Maintenance	8.86	4.02	0.44	0.0125	12	8	8	1 CTB	MLE	Internal	Internal						C2R			
Common Video Interface Unit (CVIU)	System	Maintenance	8.86	4.02	0.44	0.0125	12	8	8	1 CTB	MLE	Internal	Internal						C2R			
Common Video Interface Unit (CVIU)	System	Maintenance	8.86	4.02	0.44	0.0125	12	8	8	1 CTB	MLE	Internal	Internal						C2R			
Common Video Interface Unit (CVIU)	System	Maintenance	8.86	4.02	0.44	0.0125	12	8	8	1 CTB	MLE	Internal	Internal						C2R			
Monitor ORU Assembly	System	Maintenance	8.82	4.00	0.22	0.0062	11.25	8.75	3.8	1/2 CTB	MLE	Internal	Internal						C1R			
Monitor ORU Assembly	System	Maintenance	8.82	4.00	0.22	0.0062	11.25	8.75	3.8	1/2 CTB	MLE	Internal	Internal						C1R			
COLDPLATE - 6	System	Maintenance	8.7	3.95	0.22	0.0062	28.4	6.5	2	3 CTB	MLE	Internal	Internal						C1R			
COLDPLATE - 6	System	Maintenance	8.7	3.95	0.22	0.0062	28.4	6.5	2	3 CTB	MLE	Internal	Internal						C1R			
Slidewire	System	Maintenance	8.5	3.86	1	0.0283	0	0	0	1/2 CTB	MLE	Internal	External						C3			
Slidewire	System	Maintenance	8.5	3.86	1	0.0283					MLE	Internal	External						C3			
Compound Spec Anlzr - Hydrazines	System	Maintenance	8	3.63	0.28	0.0079	20	4	6	3 CTB	MLE	Internal	Internal						C3			
RWS Cables	System	Maintenance	7.6	3.45	1	0.0283	12	12	12	2 CTB	MLE	Internal	Internal						C1R			
RWS Cables	System	Maintenance	7.6	3.45	1	0.0283	12	12	12	2 CTB	MLE	Internal	Internal						C1R			
GPS DC/DC Converter	System	Maintenance	7.5	3.40	0.25	0.0071					MLE	Internal	Internal						C2R			
GPS DC/DC Converter	System	Maintenance	7.5	3.40	0.25	0.0071					MLE	Internal	Internal						C2R			

Cargo			Mass		Volume		Dimensions					Location										
Name	Major Type	Minor Type	Total Mass (no accommodations) lbs	Total Mass (no accommodations) kg	Total Volume (no accommodations) ft^3	Total Volume (no accommodations) m^3	length (external only) inches	Width (external only) inches	height (external only) inches	or Bag Size	Subcarrier/FSE	Preferred Launch Location	On-Orbit Location	ISS Transfer Restrictions	Resources Required	Environ constraints - Prelaunch, Pad, Ascent, Vehicle on-orbit,	Ascent/Return Qualification Limits	Hazard Type	Criticality Level	Response Period	Transfer Location	
SPCU HEAT EXCHANGER	System	Maintenance	7.05	3.20	0.1	0.0028	3.7	10.5	4.5	1/2 CTB	MLE	Internal	Internal						C1			
WINDOW SUBASSY, (OUTER)	System	Maintenance	6.9	3.13	0.17	0.0048	11.8	11.8	2.1	1 CTB	MLE	Internal	Internal						C2R			
COLDPLATE - 7	System	Maintenance	6.7	3.04	0.22	0.0062	17.8	10.7	2	1 CTB	MLE	Internal	Internal						C1			
CABLE HARNESS, MBS W3	System	Maintenance	6.13	2.78	0.23	0.0065	175	0.75	3		MLE	Internal	External						C2R			
CABLE HARNESS, MBS W5	System	Maintenance	6.13	2.78	0.23	0.0065	175	0.75	3		MLE	Internal	External						C2R			
THC ORU Assembly	System	Maintenance	6.13	2.78	0.14	0.004	8.67	6.31	4.5	1/2 CTB	MLE	Internal	Internal						C1			
THC ORU Assembly	System	Maintenance	6.13	2.78	0.14	0.004	8.67	6.31	4.5	1/2 CTB	MLE	Internal	Internal						C1			
CABLE HARNESS, MBS W4	System	Maintenance	5.97	2.71	0.23	0.0065	175	0.75	3		MLE	Internal	External						C2R			
Antenna Assy, UHF	System	Maintenance	5.8	2.63	1.1	0.0311	45	6.5	6.5	Rack	MLE	Internal	External						C1R			
Antenna Assy, UHF	System	Maintenance	5.8	2.63	1.1	0.0311	45	6.5	6.5	Rack	MLE	Internal	External						C1R			
Antenna Assy, UHF	System	Maintenance	5.8	2.63	1.1	0.0311	45	6.5	6.5	Rack	MLE	Internal	External						C1R			
UHF ANTENNA ASSY	System	Maintenance	5.8	2.63	1.1	0.0311	45	6.5	6.5	Rack	MLE	Internal	Internal						C2R			
CAPTURE LATCH ASSEMBLY	System	Maintenance	5.64	2.56	0.07	0.002	5	5	5	1/2 CTB	MLE	Internal	Internal						C2			
CAPTURE LATCH ASSEMBLY	System	Maintenance	5.64	2.56	0.07	0.002	5	5	5	1/2 CTB	MLE	Internal	Internal						C2			
CAPTURE LATCH ASSEMBLY	System	Maintenance	5.64	2.56	0.07	0.002	5	5	5	1/2 CTB	MLE	Internal	Internal						C2			
6X6 DIFFUSER ASSEMBLY	System	Maintenance	5.5	2.49	0.12	0.0034	2.5	6.6	12.5	1/2 CTB	MLE	Internal	Internal						C3			
BASEPLATE/BALLAST ASSY,GEN LIGHT	System	Maintenance	5.13	2.33	0.4	0.0113	4	26.5	6.6	3 CTB	MLE	Internal	Internal						C2R			
BASEPLATE/BALLAST ASSY,GEN LIGHT	System	Maintenance	5.13	2.33	0.4	0.0113	4	26.5	6.6	3 CTB	MLE	Internal	Internal						C2R			
BASEPLATE/BALLAST ASSY,GEN LIGHT	System	Maintenance	5.1	2.31	0.4	0.0113	4	26.5	6.6	3 CTB	MLE	Internal	Internal						C3			
Microbial Air Sampler (MAS)	System	Maintenance	5	2.27	0.47	0.0133	11.33	9.87	7.28	1 CTB	MLE	Internal	Internal						C3			
COUPLER ASSEMBLY(active)	System	Maintenance	4.72	2.14	0.25	0.0071	7	5	4	1/2 CTB	MLE	Internal	External						C1R			
COUPLER ASSEMBLY(active)	System	Maintenance	4.72	2.14	0.25	0.0071	14.5	6	5	1/2 CTB	MLE	Internal	External						C1R			
PANEL, UTILITY OUTLET	System	Maintenance	4.64	2.10	0.183	0.0052	4	12	6.6	1/2 CTB	MLE	Internal	Internal						C3			
PANEL, UTILITY OUTLET	System	Maintenance	4.64	2.10	0.183	0.0052	4	12	6.6	1/2 CTB	MLE	Internal	Internal						C3			
PANEL, UTILITY OUTLET	System	Maintenance	4.64	2.10	0.183	0.0052	4	12	6.6	1/2 CTB	MLE	Internal	Internal						C3			
COLDPLATE - 5	System	Maintenance	4.6	2.09	0.09	0.0025	11.6	6.5	2.01	1 CTB	MLE	Internal	Internal						C1R			
COLDPLATE - 5	System	Maintenance	4.6	2.09	0.09	0.0025	11.6	6.5	2.01	1 CTB	MLE	Internal	Internal						C1R			
Cartridge, Disk Drive, MSD	System	Maintenance	4.6	2.09	0.05	0.0014	7.7	2.4	4.7	1/2 CTB	MLE	Internal	Internal						C1			
CABLE HARNESS, MBS W1	System	Maintenance	4.53	2.05	0.15	0.0042	115	0.75	3		MLE	Internal	External						C2R			
CABLE HARNESS, MBS W2	System	Maintenance	4.53	2.05	0.15	0.0042	115	0.75	3		MLE	Internal	External						C2R			
CABLE HARNESS, MBS W6	System	Maintenance	4.53	2.05	0.15	0.0042	115	0.75	3		MLE	Internal	External						C2R			
CABLE HARNESS, MBS W7	System	Maintenance	4.53	2.05	0.15	0.0042	115	0.75	3		MLE	Internal	External						C2R			
CABLE HARNESS, MBS W8	System	Maintenance	4.53	2.05	0.15	0.0042	115	0.75	3		MLE	Internal	External						C2R			
Cartridge, Disk Drive, MSD	System	Maintenance	4.5	2.04	0.05	0.0014	7.7	2.4	4.7	1/2 CTB	MLE	Internal	Internal						C1			
Cartridge, Disk Drive, MSD	System	Maintenance	4.5	2.04	0.05	0.0014	7.7	2.4	4.7	1/2 CTB	MLE	Internal	Internal						C1			
Cartridge, Disk Drive, MSD	System	Maintenance	4.5	2.04	0.05	0.0014	7.7	2.4	4.7	1/2 CTB	MLE	Internal	Internal						C1			
Cartridge, Disk Drive, MSD	System	Maintenance	4.5	2.04	0.05	0.0014	7.7	2.4	4.7	1/2 CTB	MLE	Internal	Internal						C1			
CABIN AIR BACTERIA FILTER ELEMENT	System	Maintenance	4.47	2.03	0.32	0.0091	28	4	5	3 CTB	MLE	Internal	Internal						C1			
CABIN AIR BACTERIA FILTER ELEMENT	System	Maintenance	4.47	2.03	0.32	0.0091	28	4	5	3 CTB	MLE	Internal	Internal						C1			
CABIN AIR BACTERIA FILTER ELEMENT	System	Maintenance	4.47	2.03	0.32	0.0091	28	4	5	3 CTB	MLE	Internal	Internal						C1			
CABIN AIR BACTERIA FILTER ELEMENT	System	Maintenance	4.47	2.03	0.32	0.0091	28	4	5	3 CTB	MLE	Internal	Internal						C1			
CABIN AIR BACTERIA FILTER ELEMENT	System	Maintenance	4.47	2.03	0.32	0.0091	28	4	5	3 CTB	MLE	Internal	Internal						C1			
CABIN AIR BACTERIA FILTER ELEMENT	System	Maintenance	4.47	2.03	0.32	0.0091	28	4	5	3 CTB	MLE	Internal	Internal						C1			
CABIN AIR BACTERIA FILTER ELEMENT	System	Maintenance	4.47	2.03	0.32	0.0091	28	4	5	3 CTB	MLE	Internal	Internal						C1			
CABIN AIR BACTERIA FILTER ELEMENT	System	Maintenance	4.47	2.03	0.32	0.0091	28	4	5	3 CTB	MLE	Internal	Internal						C1			
CABIN AIR BACTERIA FILTER ELEMENT	System	Maintenance	4.47	2.03	0.32	0.0091	28	4	5	3 CTB	MLE	Internal	Internal						C1			
CABIN AIR BACTERIA FILTER ELEMENT	System	Maintenance	4.47	2.03	0.32	0.0091	28	4	5	3 CTB	MLE	Internal	Internal						C1			
Tether Shuttle	System	Maintenance	4.1	1.86	0.28	0.0079	8.3	8.1	7.3	1/2 CTB	MLE	Internal	External						C3			
Caution & Warning Malfunction Panel	System	Maintenance	4.1	1.86	0.16	0.0045	10.5	5	5.3	1/2 CTB	MLE	Internal	Internal						C1SR			
AREA SMOKE DETECTOR ASSEMBLY	System	Maintenance	4	1.81	0.14	0.004	6.9	5.75	6.28	1/2 CTB	MLE	Internal	Internal						C1S			
AREA SMOKE DETECTOR ASSEMBLY	System	Maintenance	4	1.81	0.14	0.004	6.9	5.75	6.28	1/2 CTB	MLE	Internal	Internal						C1S			
AREA SMOKE DETECTOR ASSEMBLY	System	Maintenance	4	1.81	0.14	0.004	6.9	5.75	6.28	1/2 CTB	MLE	Internal	Internal						C1SR			

Cargo			Mass		Volume		Dimensions					Location										
Name	Major Type	Minor Type	Total Mass (no accommodations) lbs	Total Mass (no accommodations) kg	Total Volume (no accommodations) ft^3	Total Volume (no accommodations) m^3	length (external only) inches	Width (external only) inches	height (external only) inches	or Bag Size	Subcarrier/FSE	Preferred Launch Location	On-Orbit Location	ISS Transfer Restrictions	Resources Required	Environ constraints - Prelaunch, Pad, Ascent, Vehicle on-orbit,	Ascent/Return Qualification Limits	Hazard Type	Criticality Level	Response Period	Transfer Location	
AREA SMOKE DETECTOR ASSEMBLY	System	Maintenance	4	1.81	0.14	0.004	6.9	5.75	6.28	1/2 CTB	MLE	Internal	Internal						C1SR			
CAPTURE LATCH ASSY ACTUATOR	System	Maintenance	4	1.81	0.016	0.0005	3	3	4	1/2 CTB	MLE	Internal	Internal						C2			
CAPTURE LATCH ASSY ACTUATOR	System	Maintenance	4	1.81	0.016	0.0005	3	3	4	1/2 CTB	MLE	Internal	Internal						C2			
CAPTURE LATCH ASSY ACTUATOR	System	Maintenance	4	1.81	0.016	0.0005	3	3	4	1/2 CTB	MLE	Internal	Internal						C2			
ACTUATOR, POWERED BOLT ASSY	System	Maintenance	4	1.81	0.01	0.0003	2	5	2	1/2 CTB	MLE	Internal	Internal						C2			
ACTUATOR, POWERED BOLT ASSY	System	Maintenance	4	1.81	0.01	0.0003	2	5	2	1/2 CTB	MLE	Internal	Internal						C2			
ACTUATOR, POWERED BOLT ASSY	System	Maintenance	4	1.81	0.01	0.0003	2	5	2	1/2 CTB	MLE	Internal	Internal						C2			
NON-PROPULSIVE VENT	System	Maintenance	3.95	1.79	0.21	0.0059	6	12	5	1/2 CTB	MLE	Internal	External						C3			
NON-PROPULSIVE VENT	System	Maintenance	3.95	1.79	0.21	0.0059	6	12	5	1/2 CTB	MLE	Internal	External						C3			
NON-PROPULSIVE VENT	System	Maintenance	3.95	1.79	0.21	0.0059	6	12	5	1/2 CTB	MLE	Internal	External						C3			
NON-PROPULSIVE VENT	System	Maintenance	3.95	1.79	0.21	0.0059	6	12	5	1/2 CTB	MLE	Internal	External						C3			
RING (SEAL PROTECTOR)	System	Maintenance	3.63	1.65	0.31	0.0088	30	30	1.7	M01	MLE	Internal	Internal						C2			
N2 Latching Motor Valve	System	Maintenance	3.6	1.63	0.16	0.0045	4.71	7.25	8	1/2 CTB	MLE	Internal	Internal						C1R			
ESS P.S #1 CARD	System	Maintenance	3.2	1.45	0.04	0.0011	9.2	1.2	6.6	1/2 CTB	MLE	Internal	Internal						C1			
ESS P.S #1 CARD	System	Maintenance	3.2	1.45	0.04	0.0011	9.2	1.2	6.6	1/2 CTB	MLE	Internal	Internal						C1			
ESS P.S #1 CARD	System	Maintenance	3.2	1.45	0.04	0.0011	9.2	1.2	6.6	1/2 CTB	MLE	Internal	Internal						C1			
ESS P.S #1 CARD	System	Maintenance	3.2	1.45	0.04	0.0011	9.2	1.2	6.6	1/2 CTB	MLE	Internal	Internal						C1			
ESS P.S #1 CARD	System	Maintenance	3.2	1.45	0.04	0.0011	9.2	1.2	6.6	1/2 CTB	MLE	Internal	Internal						C1			
ESS P.S #1 CARD	System	Maintenance	3.2	1.45	0.04	0.0011	9.2	1.2	6.6	1/2 CTB	MLE	Internal	Internal						C1			
ESS P.S #1 CARD	System	Maintenance	3.2	1.45	0.04	0.0011	9.2	1.2	6.6	1/2 CTB	MLE	Internal	Internal						C1			
ESS P.S #1 CARD	System	Maintenance	3.2	1.45	0.04	0.0011	9.2	1.2	6.6	1/2 CTB	MLE	Internal	Internal						C1			
ESS P.S #1 CARD	System	Maintenance	3.2	1.45	0.04	0.0011	9.2	1.2	6.6	1/2 CTB	MLE	Internal	Internal						C1			
ESS P.S #1 CARD	System	Maintenance	3.2	1.45	0.04	0.0011	9.2	1.2	6.6	1/2 CTB	MLE	Internal	External						C1			
ESS P.S #1 CARD	System	Maintenance	3.2	1.45	0.04	0.0011	9.2	1.2	6.6	1/2 CTB	MLE	Internal	External						C1			
ESS P.S #1 CARD	System	Maintenance	3.2	1.45	0.04	0.0011	9.2	1.2	6.6	1/2 CTB	MLE	Internal	Internal						C1			
3-WAY VALVE .125 INCH	System	Maintenance	3.18	1.44	0.08	0.0023	4.5	4.5	7	1/2 CTB	MLE	Internal	Internal						C1R			
3-WAY VALVE .125 INCH	System	Maintenance	3.18	1.44	0.08	0.0023	4.5	4.5	7	1/2 CTB	MLE	Internal	Internal						C1R			
3-WAY VALVE .125 INCH	System	Maintenance	3.18	1.44	0.08	0.0023	4.5	4.5	7	1/2 CTB	MLE	Internal	Internal						C1R			
CABIN AIR DUCT DAMPER ASSEMBLY	System	Maintenance	3.06	1.39	0.35	0.0099	6.3	7.7	12.6	1/2 CTB	MLE	Internal	Internal						C1R			
CABIN AIR DUCT DAMPER ASSEMBLY	System	Maintenance	3.06	1.39	0.35	0.0099	6.3	7.7	12.6	1/2 CTB	MLE	Internal	Internal						C1R			
CABIN AIR DUCT DAMPER ASSEMBLY	System	Maintenance	3.06	1.39	0.35	0.0099	6.3	7.7	12.6	1/2 CTB	MLE	Internal	Internal						C1R			
Wire Harness Assembly Internal	System	Maintenance	3	1.36	0.01	0.0003					MLE	Internal	Internal						C2			
Wire Harness Assembly Internal	System	Maintenance	3	1.36	0.01	0.0003					MLE	Internal	Internal						C2			
FLOW METER	System	Maintenance	2.96	1.34	0.07	0.002	7	2.5	6.5	1/2 CTB	MLE	Internal	Internal						C1R			
POWERED BOLT ASSEMBLY	System	Maintenance	2.66	1.21	0.037	0.001	4	4	4	1/2 CTB	MLE	Internal	Internal						C1R			
POWERED BOLT ASSEMBLY	System	Maintenance	2.66	1.21	0.037	0.001	4	4	4	1/2 CTB	MLE	Internal	Internal						C1R			
LAMP HOUSING ASSEMBLY, GEN LIGHT	System	Maintenance	2.56	1.16	0.12	0.0034	24	3	2.8	3 CTB	MLE	Internal	Internal						C2R			
LAMP HOUSING ASSEMBLY, GEN LIGHT	System	Maintenance	2.56	1.16	0.12	0.0034	24	3	2.8	3 CTB	MLE	Internal	Internal						C2R			
LAMP HOUSING ASSEMBLY, GEN LIGHT	System	Maintenance	2.56	1.16	0.12	0.0034	24	3	2.8	3 CTB	MLE	Internal	Internal						C3			
Heater Assy	System	Maintenance	2.5	1.13	0.77	0.0218	0	0	0	1/2 CTB	MLE	Internal	External						C1R			
Heater Assy	System	Maintenance	2.5	1.13	0.77	0.0218	0	0	0	1/2 CTB	MLE	Internal	External						C1R			
MDM P/S CARD (POWER SUPPLY)	System	Maintenance	2.5	1.13	0.04	0.0011	9.2	1.2	6.6	1/2 CTB	MLE	Internal	Internal						C1			
MDM P/S CARD (POWER SUPPLY)	System	Maintenance	2.5	1.13	0.04	0.0011	9.2	1.2	6.6	1/2 CTB	MLE	Internal	Internal						C1			
MDM P/S CARD (POWER SUPPLY)	System	Maintenance	2.5	1.13	0.04	0.0011	9.2	1.2	6.6	1/2 CTB	MLE	Internal	Internal						C1			
MDM P/S CARD (POWER SUPPLY)	System	Maintenance	2.5	1.13	0.04	0.0011	9.2	1.2	6.6	1/2 CTB	MLE	Internal	Internal						C1			
MDM P/S CARD (POWER SUPPLY)	System	Maintenance	2.5	1.13	0.04	0.0011	9.2	1.2	6.6	1/2 CTB	MLE	Internal	Internal						C1			
MDM P/S CARD (POWER SUPPLY)	System	Maintenance	2.5	1.13	0.04	0.0011	9.2	1.2	6.6	1/2 CTB	MLE	Internal	Internal						C1			
MDM P/S CARD (POWER SUPPLY)	System	Maintenance	2.5	1.13	0.04	0.0011	9.2	1.2	6.6	1/2 CTB	MLE	Internal	Internal						C1			
MDM P/S CARD (POWER SUPPLY)	System	Maintenance	2.5	1.13	0.04	0.0011	9.2	1.2	6.6	1/2 CTB	MLE	Internal	Internal						C1			

Cargo			Mass		Volume		Dimensions					Location										
Name	Major Type	Minor Type	Total Mass (no accommodations) lbs	Total Mass (no accommodations) kg	Total Volume (no accommodations) ft^3	Total Volume (no accommodations) m^3	length (external only) inches	Width (external only) inches	height (external only) inches	or Bag Size	Subcarrier/FSE	Preferred Launch Location	On-Orbit Location	ISS Transfer Restrictions	Resources Required	Environ constraints - Prelaunch, Pad, Ascent, Vehicle on-orbit,	Ascent/Return Qualification Limits	Hazard Type	Criticality Level	Response Period	Transfer Location	
MDM P/S CARD (POWER SUPPLY)	System	Maintenance	2.5	1.13	0.04	0.0011	9.2	1.2	6.6	1/2 CTB	MLE	Internal	Internal						C1			
MDM P/S CARD (POWER SUPPLY)	System	Maintenance	2.5	1.13	0.04	0.0011	9.2	1.2	6.6	1/2 CTB	MLE	Internal	Internal						C1			
MDM P/S CARD (POWER SUPPLY)	System	Maintenance	2.5	1.13	0.04	0.0011	9.2	1.2	6.6	1/2 CTB	MLE	Internal	External						C1			
MDM P/S CARD (POWER SUPPLY)	System	Maintenance	2.5	1.13	0.04	0.0011	9.2	1.2	6.6	1/2 CTB	MLE	Internal	External						C1			
MDM P/S CARD (POWER SUPPLY)	System	Maintenance	2.5	1.13	0.04	0.0011	9.2	1.2	6.6	1/2 CTB	MLE	Internal	External						C1			
MDM P/S CARD (POWER SUPPLY)	System	Maintenance	2.5	1.13	0.04	0.0011	9.2	1.2	6.6	1/2 CTB	MLE	Internal	External						C1			
MDM P/S CARD (POWER SUPPLY)	System	Maintenance	2.5	1.13	0.04	0.0011	9.2	1.2	6.6	1/2 CTB	MLE	Internal	External						C1			
MDM P/S CARD (POWER SUPPLY)	System	Maintenance	2.5	1.13	0.04	0.0011	9.2	1.2	6.6	1/2 CTB	MLE	Internal	External						C1			
MDM P/S CARD (POWER SUPPLY)	System	Maintenance	2.5	1.13	0.04	0.0011	9.2	1.2	6.6	1/2 CTB	MLE	Internal	External						C1			
MDM P/S CARD (POWER SUPPLY)	System	Maintenance	2.5	1.13	0.04	0.0011	9.2	1.2	6.6	1/2 CTB	MLE	Internal	External						C1			
MDM P/S CARD (POWER SUPPLY)	System	Maintenance	2.5	1.13	0.04	0.0011	9.2	1.2	6.6	1/2 CTB	MLE	Internal	External						C1			
MDM P/S CARD (POWER SUPPLY)	System	Maintenance	2.5	1.13	0.04	0.0011	9.2	1.2	6.6	1/2 CTB	MLE	Internal	External						C1			
MDM P/S CARD (POWER SUPPLY)	System	Maintenance	2.5	1.13	0.04	0.0011	9.2	1.2	6.6	1/2 CTB	MLE	Internal	External						C1			
MDM P/S CARD (POWER SUPPLY)	System	Maintenance	2.5	1.13	0.04	0.0011	9.2	1.2	6.6	1/2 CTB	MLE	Internal	External						C1			
MDM P/S CARD (POWER SUPPLY)	System	Maintenance	2.5	1.13	0.04	0.0011	9.2	1.2	6.6	1/2 CTB	MLE	Internal	External						C1			
MDM P/S CARD (POWER SUPPLY)	System	Maintenance	2.5	1.13	0.04	0.0011	9.2	1.2	6.6	1/2 CTB	MLE	Internal	External						C1			
MDM P/S CARD (POWER SUPPLY) (Type 9)	System	Maintenance	2.5	1.13	0.04	0.0011	9.2	1.2	6.6	1/2 CTB	MLE	Internal	External						C1			
MDM P/S CARD (POWER SUPPLY) (Type 9)	System	Maintenance	2.5	1.13	0.04	0.0011	9.2	1.2	6.6	1/2 CTB	MLE	Internal	External						C1			
MDM P/S CARD (POWER SUPPLY) (Type 9)	System	Maintenance	2.5	1.13	0.04	0.0011	9.2	1.2	6.6	1/2 CTB	MLE	Internal	External						C1			
MDM P/S CARD (POWER SUPPLY) (Type 9)	System	Maintenance	2.5	1.13	0.04	0.0011	9.2	1.2	6.6	1/2 CTB	MLE	Internal	External						C1			
PRESS EQUAL VLV ASSY/MANUAL	System	Maintenance	2.36	1.07	0.13	0.0037	4.9	6.7	6.7	1/2 CTB	MLE	Internal	Internal						C1R			
Cooling Fan C (structure)	System	Maintenance	2.3	1.04	0.08	0.0023	7.42	5.25	3.6	1/2 CTB	MLE	Internal	Internal						C1			
Cooling Fan C (structure)	System	Maintenance	2.3	1.04	0.08	0.0023	7.42	5.25	3.6	1/2 CTB	MLE	Internal	Internal						C1			
DCP Cooling Fan (A&B)	System	Maintenance	2.3	1.04	0.08	0.0023	7.42	5.25	3.6	1/2 CTB	MLE	Internal	Internal						C1R			
DCP Cooling Fan (A&B)	System	Maintenance	2.3	1.04	0.08	0.0023	7.42	5.25	3.6	1/2 CTB	MLE	Internal	Internal						C1R			
ESS P.S #2 CARD	System	Maintenance	2.2	1.00	0.04	0.0011	9.2	1.2	6.6	1/2 CTB	MLE	Internal	Internal						C1			
ESS P.S #2 CARD	System	Maintenance	2.2	1.00	0.04	0.0011	9.2	1.2	6.6	1/2 CTB	MLE	Internal	Internal						C1			
ESS P.S #2 CARD	System	Maintenance	2.2	1.00	0.04	0.0011	9.2	1.2	6.6	1/2 CTB	MLE	Internal	Internal						C1			
ESS P.S #2 CARD	System	Maintenance	2.2	1.00	0.04	0.0011	9.2	1.2	6.6	1/2 CTB	MLE	Internal	Internal						C1			
ESS P.S #2 CARD	System	Maintenance	2.2	1.00	0.04	0.0011	9.2	1.2	6.6	1/2 CTB	MLE	Internal	Internal						C1			
ESS P.S #2 CARD	System	Maintenance	2.2	1.00	0.04	0.0011	9.2	1.2	6.6	1/2 CTB	MLE	Internal	Internal						C1			
ESS P.S #2 CARD	System	Maintenance	2.2	1.00	0.04	0.0011	9.2	1.2	6.6	1/2 CTB	MLE	Internal	Internal						C1			
ESS P.S #2 CARD	System	Maintenance	2.2	1.00	0.04	0.0011	9.2	1.2	6.6	1/2 CTB	MLE	Internal	Internal						C1			
ESS P.S #2 CARD	System	Maintenance	2.2	1.00	0.04	0.0011	9.2	1.2	6.6	1/2 CTB	MLE	Internal	Internal						C1			
ESS P.S #2 CARD	System	Maintenance	2.2	1.00	0.04	0.0011	9.2	1.2	6.6	1/2 CTB	MLE	Internal	Internal						C1			
ESS P.S #2 CARD	System	Maintenance	2.2	1.00	0.04	0.0011	9.2	1.2	6.6	1/2 CTB	MLE	Internal	Internal						C1			
ESS P.S #2 CARD	System	Maintenance	2.2	1.00	0.04	0.0011	9.2	1.2	6.6	1/2 CTB	MLE	Internal	External						C1			
ESS P.S #2 CARD	System	Maintenance	2.2	1.00	0.04	0.0011	9.2	1.2	6.6	1/2 CTB	MLE	Internal	External						C1			
Manual Flow Control Valve	System	Maintenance	2.13	0.97	0.06	0.0017	7.8	4.5	3	1/2 CTB	MLE	Internal	Internal						C1S			
Manual Flow Control Valve	System	Maintenance	2.13	0.97	0.06	0.0017	7.8	4.5	3	1/2 CTB	MLE	Internal	Internal						C1S			
Manual Flow Control Valve	System	Maintenance	2.13	0.97	0.06	0.0017	7.8	4.5	3	1/2 CTB	MLE	Internal	Internal						C1S			
Manual Flow Control Valve	System	Maintenance	2.13	0.97	0.06	0.0017	7.8	4.5	3	1/2 CTB	MLE	Internal	Internal						C1S			
Manual Flow Control Valve	System	Maintenance	2.13	0.97	0.06	0.0017	7.8	4.5	3	1/2 CTB	MLE	Internal	Internal						C1S			
Manual Flow Control Valve	System	Maintenance	2.13	0.97	0.06	0.0017	7.8	4.5	3	1/2 CTB	MLE	Internal	Internal						C1S			
Manual Flow Control Valve	System	Maintenance	2.13	0.97	0.06	0.0017	7.8	4.5	3	1/2 CTB	MLE	Internal	Internal						C1S			
Manual Flow Control Valve	System	Maintenance	2.13	0.97	0.06	0.0017	7.8	4.5	3	1/2 CTB	MLE	Internal	Internal						C1S			

Cargo			Mass		Volume		Dimensions					Location										
Name	Major Type	Minor Type	Total Mass (no accommodations) lbs	Total Mass (no accommodations) kg	Total Volume (no accommodations) ft^3	Total Volume (no accommodations) m^3	length (external only) inches	Width (external only) inches	height (external only) inches	or Bag Size	Subcarrier/FSE	Preferred Launch Location	On-Orbit Location	ISS Transfer Restrictions	Resources Required	Environ constraints - Prelaunch, Pad, Ascent, Vehicle on-orbit,	Ascent/Return Qualification Limits	Hazard Type	Criticality Level	Response Period	Transfer Location	
Manual Flow Control Valve	System	Maintenance	2.13	0.97	0.06	0.0017	7.8	4.5	3	1/2 CTB	MLE	Internal	Internal						C1S			
Manual Flow Control Valve	System	Maintenance	2.13	0.97	0.06	0.0017	7.8	4.5	3	1/2 CTB	MLE	Internal	Internal						C1S			
Manual Flow Control Valve	System	Maintenance	2.13	0.97	0.06	0.0017	7.8	4.5	3	1/2 CTB	MLE	Internal	Internal						C1S			
COLDPLATE - 4	System	Maintenance	2	0.91	0.06	0.0017	7.4	6.5	2	1/2 CTB	MLE	Internal	Internal						C1R			
Equalization Valves	System	Maintenance	2	0.91	0.018	0.0005					MLE	Internal	Internal						C1R			
COUPLER ASSEMBLY(passive)	System	Maintenance	1.83	0.83	0.08	0.0023	7	5	4	1/2 CTB	MLE	Internal	External						C1R			
COUPLER ASSEMBLY(passive)	System	Maintenance	1.83	0.83	0.08	0.0023	14.5	6	5	1/2 CTB	MLE	Internal	External						C1R			
Cable Guide Assembly	System	Maintenance	1.82	0.83	0.14	0.004	8.8	6	4.6	1/2 CTB	MLE	Internal	External						C2R			
Cable Guide Assembly	System	Maintenance	1.82	0.83	0.14	0.004	8.8	6	4.6	1/2 CTB	MLE	Internal	External						C2R			
Cable Guide Assembly	System	Maintenance	1.82	0.83	0.14	0.004	8.8	6	4.6	1/2 CTB	MLE	Internal	External						C2R			
Cable Guide Assembly	System	Maintenance	1.82	0.83	0.14	0.004	8.8	6	4.6	1/2 CTB	MLE	Internal	External						C2R			
Cable Guide Assembly	System	Maintenance	1.82	0.83	0.14	0.004	8.8	6	4.6	1/2 CTB	MLE	Internal	External						C2R			
Cable Guide Assembly	System	Maintenance	1.82	0.83	0.14	0.004	8.8	6	4.6	1/2 CTB	MLE	Internal	External						C2R			
Cable Guide Assembly	System	Maintenance	1.82	0.83	0.14	0.004	8.8	6	4.6	1/2 CTB	MLE	Internal	External						C2R			
Cable Guide Assembly	System	Maintenance	1.82	0.83	0.14	0.004	8.8	6	4.6	1/2 CTB	MLE	Internal	External						C2R			
Cable Guide Assembly	System	Maintenance	1.82	0.83	0.14	0.004	8.8	6	4.6	1/2 CTB	MLE	Internal	External						C2R			
Cable Guide Assembly	System	Maintenance	1.82	0.83	0.14	0.004	8.8	6	4.6	1/2 CTB	MLE	Internal	External						C2R			
INTERNAL LIGHTING-EMERG.Strip 57"	System	Maintenance	1.75	0.79	0.033	0.0009	57	1	1	Rack	MLE	Internal	Internal						C1SR			
INTERNAL LIGHTING-EMERG.Strip 57"	System	Maintenance	1.75	0.79	0.033	0.0009	57	1	1	Rack	MLE	Internal	Internal						C2R			
INTERNAL LIGHTING-EMERG.Strip 57"	System	Maintenance	1.75	0.79	0.033	0.0009	57	1	1	Rack	MLE	Internal	Internal						C2R			
INTRAVEHICULAR ANTENNA ASSEMBLY (IAA)	System	Maintenance	1.7	0.77	0.18	0.0051	11.3	9.3	3	1/2 CTB	MLE	Internal	Internal						C3			
INTRAVEHICULAR ANTENNA ASSEMBLY (IAA)	System	Maintenance	1.7	0.77	0.18	0.0051	11.3	9.3	3	1/2 CTB	MLE	Internal	Internal						C3			
INTRAVEHICULAR ANTENNA ASSEMBLY (IAA)	System	Maintenance	1.7	0.77	0.18	0.0051	11.3	9.3	3	1/2 CTB	MLE	Internal	Internal						C3			
INTRAVEHICULAR ANTENNA ASSEMBLY (IAA)	System	Maintenance	1.7	0.77	0.18	0.0051	11.3	9.3	3	1/2 CTB	MLE	Internal	Internal						C3			
INTRAVEHICULAR ANTENNA ASSEMBLY (IAA)	System	Maintenance	1.7	0.77	0.18	0.0051	11.3	9.3	3	1/2 CTB	MLE	Internal	Internal						C3			
CCA, Motor Control, MSD	System	Maintenance	1.6	0.73	0.02	0.0006	8.7	0.7	6.6	1/2 CTB	MLE	Internal	Internal						C1			
CCA, Motor Control, MSD	System	Maintenance	1.6	0.73	0.02	0.0006	8.7	0.7	6.6	1/2 CTB	MLE	Internal	Internal						C1			
CCA, Motor Control, MSD	System	Maintenance	1.6	0.73	0.02	0.0006	8.7	0.7	6.6	1/2 CTB	MLE	Internal	Internal						C1			
CCA, Motor Control, MSD	System	Maintenance	1.6	0.73	0.02	0.0006	8.7	0.7	6.6	1/2 CTB	MLE	Internal	Internal						C1			
CCA, Motor Control, MSD	System	Maintenance	1.6	0.73	0.02	0.0006	8.7	0.7	6.6	1/2 CTB	MLE	Internal	Internal						C1			
HLA CARD	System	Maintenance	1.51	0.68	0.02	0.0006	8.7	0.7	6.6	1/2 CTB	MLE	Internal	Internal						C1			
HLA CARD	System	Maintenance	1.51	0.68	0.02	0.0006	8.7	0.7	6.6	1/2 CTB	MLE	Internal	Internal						C1			
HLA CARD	System	Maintenance	1.51	0.68	0.02	0.0006	8.7	0.7	6.6	1/2 CTB	MLE	Internal	Internal						C1			
HLA CARD	System	Maintenance	1.51	0.68	0.02	0.0006	8.7	0.7	6.6	1/2 CTB	MLE	Internal	Internal						C1			
HLA CARD	System	Maintenance	1.51	0.68	0.02	0.0006	8.7	0.7	6.6	1/2 CTB	MLE	Internal	Internal						C1			
HLA CARD	System	Maintenance	1.51	0.68	0.02	0.0006	8.7	0.7	6.6	1/2 CTB	MLE	Internal	Internal						C1			
HLA CARD	System	Maintenance	1.51	0.68	0.02	0.0006	8.7	0.7	6.6	1/2 CTB	MLE	Internal	Internal						C1			
HLA CARD	System	Maintenance	1.51	0.68	0.02	0.0006	8.7	0.7	6.6	1/2 CTB	MLE	Internal	External						C1			
HLA CARD	System	Maintenance	1.51	0.68	0.02	0.0006	8.7	0.7	6.6	1/2 CTB	MLE	Internal	External						C1			
HLA CARD	System	Maintenance	1.51	0.68	0.02	0.0006	8.7	0.7	6.6	1/2 CTB	MLE	Internal	External						C1			
HLA CARD	System	Maintenance	1.51	0.68	0.02	0.0006	8.7	0.7	6.6	1/2 CTB	MLE	Internal	External						C1			
HLA CARD	System	Maintenance	1.51	0.68	0.02	0.0006	8.7	0.7	6.6	1/2 CTB	MLE	Internal	External						C1			
HLA CARD	System	Maintenance	1.51	0.68	0.02	0.0006	8.7	0.7	6.6	1/2 CTB	MLE	Internal	External						C1			
AIO CARD	System	Maintenance	1.5	0.68	0.02	0.0006	8.7	0.7	6.6	1/2 CTB	MLE	Internal	Internal						C1			
AIO CARD	System	Maintenance	1.5	0.68	0.02	0.0006	8.7	0.7	6.6	1/2 CTB	MLE	Internal	External						C1			
AIO CARD	System	Maintenance	1.5	0.68	0.02	0.0006	8.7	0.7	6.6	1/2 CTB	MLE	Internal	External						C1			
AIO CARD	System	Maintenance	1.5	0.68	0.02	0.0006	8.7	0.7	6.6	1/2 CTB	MLE	Internal	External						C1			

Cargo			Mass		Volume		Dimensions					Location										
Name	Major Type	Minor Type	Total Mass (no accommodations) lbs	Total Mass (no accommodations) kg	Total Volume (no accommodations) ft^3	Total Volume (no accommodations) m^3	length (external only) inches	Width (external only) inches	height (external only) inches	or Bag Size	Subcarrier/FSE	Preferred Launch Location	On-Orbit Location	ISS Transfer Restrictions	Resources Required	Environ constraints - Prelaunch, Pad, Ascent, Vehicle on-orbit,	Ascent/Return Qualification Limits	Hazard Type	Criticality Level	Response Period	Transfer Location	
AIO CARD	System	Maintenance	1.5	0.68	0.02	0.0006	8.7	0.7	6.6	1/2 CTB	MLE	Internal	External						C1			
AIO CARD	System	Maintenance	1.5	0.68	0.02	0.0006	8.7	0.7	6.6	1/2 CTB	MLE	Internal	Internal						C1			
AIO CARD	System	Maintenance	1.5	0.68	0.02	0.0006	8.7	0.7	6.6	1/2 CTB	MLE	Internal	Internal						C1			
AIO CARD	System	Maintenance	1.5	0.68	0.02	0.0006	8.7	0.7	6.6	1/2 CTB	MLE	Internal	Internal						C1			
AIO CARD	System	Maintenance	1.5	0.68	0.02	0.0006	8.7	0.7	6.6	1/2 CTB	MLE	Internal	Internal						C1			
AIO CARD	System	Maintenance	1.5	0.68	0.02	0.0006	8.7	0.7	6.6	1/2 CTB	MLE	Internal	Internal						C1			
AIO CARD	System	Maintenance	1.5	0.68	0.02	0.0006	8.7	0.7	6.6	1/2 CTB	MLE	Internal	Internal						C1			
DIO CARD	System	Maintenance	1.5	0.68	0.02	0.0006	8.7	0.7	6.6	1/2 CTB	MLE	Internal	Internal						C1			
DIO CARD	System	Maintenance	1.5	0.68	0.02	0.0006	8.7	0.7	6.6	1/2 CTB	MLE	Internal	Internal						C1			
DIO CARD	System	Maintenance	1.5	0.68	0.02	0.0006	8.7	0.7	6.6	1/2 CTB	MLE	Internal	Internal						C1			
DIO CARD	System	Maintenance	1.5	0.68	0.02	0.0006	8.7	0.7	6.6	1/2 CTB	MLE	Internal	Internal						C1			
DIO CARD	System	Maintenance	1.5	0.68	0.02	0.0006	8.7	0.7	6.6	1/2 CTB	MLE	Internal	Internal						C1			
DIO CARD	System	Maintenance	1.5	0.68	0.02	0.0006	8.7	0.7	6.6	1/2 CTB	MLE	Internal	Internal						C1			
DIO CARD	System	Maintenance	1.5	0.68	0.02	0.0006	8.7	0.7	6.6	1/2 CTB	MLE	Internal	Internal						C1			
DIO CARD	System	Maintenance	1.5	0.68	0.02	0.0006	8.7	0.7	6.6	1/2 CTB	MLE	Internal	Internal						C1			
DIO CARD	System	Maintenance	1.5	0.68	0.02	0.0006	8.7	0.7	6.6	1/2 CTB	MLE	Internal	Internal						C1			
DIO CARD	System	Maintenance	1.5	0.68	0.02	0.0006	8.7	0.7	6.6	1/2 CTB	MLE	Internal	External						C1			
DIO CARD	System	Maintenance	1.5	0.68	0.02	0.0006	8.7	0.7	6.6	1/2 CTB	MLE	Internal	External						C1			
DIO CARD	System	Maintenance	1.5	0.68	0.02	0.0006	8.7	0.7	6.6	1/2 CTB	MLE	Internal	External						C1			
DIO CARD	System	Maintenance	1.5	0.68	0.02	0.0006	8.7	0.7	6.6	1/2 CTB	MLE	Internal	External						C1			
DIO CARD	System	Maintenance	1.5	0.68	0.02	0.0006	8.7	0.7	6.6	1/2 CTB	MLE	Internal	External						C1			
DIO CARD	System	Maintenance	1.5	0.68	0.02	0.0006	8.7	0.7	6.6	1/2 CTB	MLE	Internal	External						C1			
LLA CARD	System	Maintenance	1.5	0.68	0.02	0.0006	8.7	0.7	6.6	1/2 CTB	MLE	Internal	Internal						C1			
LLA CARD	System	Maintenance	1.5	0.68	0.02	0.0006	8.7	0.7	6.6	1/2 CTB	MLE	Internal	Internal						C1			
LLA CARD	System	Maintenance	1.5	0.68	0.02	0.0006	8.7	0.7	6.6	1/2 CTB	MLE	Internal	Internal						C1			
LLA CARD	System	Maintenance	1.5	0.68	0.02	0.0006	8.7	0.7	6.6	1/2 CTB	MLE	Internal	Internal						C1			
LLA CARD	System	Maintenance	1.5	0.68	0.02	0.0006	8.7	0.7	6.6	1/2 CTB	MLE	Internal	Internal						C1			
LLA CARD	System	Maintenance	1.5	0.68	0.02	0.0006	8.7	0.7	6.6	1/2 CTB	MLE	Internal	Internal						C1			
LLA CARD	System	Maintenance	1.5	0.68	0.02	0.0006	8.7	0.7	6.6	1/2 CTB	MLE	Internal	Internal						C1			
LLA CARD	System	Maintenance	1.5	0.68	0.02	0.0006	8.7	0.7	6.6	1/2 CTB	MLE	Internal	Internal						C1			
LLA CARD	System	Maintenance	1.5	0.68	0.02	0.0006	8.7	0.7	6.6	1/2 CTB	MLE	Internal	External						C1			
LLA CARD	System	Maintenance	1.5	0.68	0.02	0.0006	8.7	0.7	6.6	1/2 CTB	MLE	Internal	External						C1			
LLA CARD	System	Maintenance	1.5	0.68	0.02	0.0006	8.7	0.7	6.6	1/2 CTB	MLE	Internal	External						C1			
LLA CARD	System	Maintenance	1.5	0.68	0.02	0.0006	8.7	0.7	6.6	1/2 CTB	MLE	Internal	External						C1			
LLA CARD	System	Maintenance	1.5	0.68	0.02	0.0006	8.7	0.7	6.6	1/2 CTB	MLE	Internal	External						C1			
LLA CARD	System	Maintenance	1.5	0.68	0.02	0.0006	8.7	0.7	6.6	1/2 CTB	MLE	Internal	External						C1			
LLA CARD	System	Maintenance	1.5	0.68	0.02	0.0006	8.7	0.7	6.6	1/2 CTB	MLE	Internal	External						C1			
LLA CARD	System	Maintenance	1.5	0.68	0.02	0.0006	8.7	0.7	6.6	1/2 CTB	MLE	Internal	External						C1			
LLA CARD	System	Maintenance	1.5	0.68	0.02	0.0006	8.7	0.7	6.6	1/2 CTB	MLE	Internal	External						C1			
LLA CARD	System	Maintenance	1.5	0.68	0.02	0.0006	8.7	0.7	6.6	1/2 CTB	MLE	Internal	External						C1			
LLA CARD	System	Maintenance	1.5	0.68	0.02	0.0006	8.7	0.7	6.6	1/2 CTB	MLE	Internal	External						C1			
LLA CARD	System	Maintenance	1.5	0.68	0.02	0.0006	8.7	0.7	6.6	1/2 CTB	MLE	Internal	External						C1			
LLA CARD	System	Maintenance	1.5	0.68	0.02	0.0006	8.7	0.7	6.6	1/2 CTB	MLE	Internal	External						C1			
LLA CARD	System	Maintenance	1.5	0.68	0.02	0.0006	8.7	0.7	6.6	1/2 CTB	MLE	Internal	External						C1			
SDO CARD	System	Maintenance	1.5	0.68	0.02	0.0006	8.7	0.7	6.6	1/2 CTB	MLE	Internal	Internal						C1			
SDO CARD	System	Maintenance	1.5	0.68	0.02	0.0006	8.7	0.7	6.6	1/2 CTB	MLE	Internal	Internal						C1			

Cargo			Mass		Volume		Dimensions					Location										
Name	Major Type	Minor Type	Total Mass (no accommodations) lbs	Total Mass (no accommodations) kg	Total Volume (no accommodations) ft^3	Total Volume (no accommodations) m^3	length (external only) inches	Width (external only) inches	height (external only) inches	or Bag Size	Subcarrier/FSE	Preferred Launch Location	On-Orbit Location	ISS Transfer Restrictions	Resources Required	Environ constraints - Prelaunch, Pad, Ascent, Vehicle on-orbit,	Ascent/Return Qualification Limits	Hazard Type	Criticality Level	Response Period	Transfer Location	
SDO CARD	System	Maintenance	1.5	0.68	0.02	0.0006	8.7	0.7	6.6	1/2 CTB	MLE	Internal	Internal						C1			
SDO CARD	System	Maintenance	1.5	0.68	0.02	0.0006	8.7	0.7	6.6	1/2 CTB	MLE	Internal	Internal						C1			
SDO CARD	System	Maintenance	1.5	0.68	0.02	0.0006	8.7	0.7	6.6	1/2 CTB	MLE	Internal	Internal						C1			
SDO CARD	System	Maintenance	1.5	0.68	0.02	0.0006	8.7	0.7	6.6	1/2 CTB	MLE	Internal	Internal						C1			
SDO CARD	System	Maintenance	1.5	0.68	0.02	0.0006	8.7	0.7	6.6	1/2 CTB	MLE	Internal	External						C1			
SDO CARD	System	Maintenance	1.5	0.68	0.02	0.0006	8.7	0.7	6.6	1/2 CTB	MLE	Internal	External						C1			
SDO CARD	System	Maintenance	1.5	0.68	0.02	0.0006	8.7	0.7	6.6	1/2 CTB	MLE	Internal	External						C1			
SDO CARD	System	Maintenance	1.5	0.68	0.02	0.0006	8.7	0.7	6.6	1/2 CTB	MLE	Internal	External						C1			
SDO CARD	System	Maintenance	1.5	0.68	0.02	0.0006	8.7	0.7	6.6	1/2 CTB	MLE	Internal	External						C1			
SDO CARD	System	Maintenance	1.5	0.68	0.02	0.0006	8.7	0.7	6.6	1/2 CTB	MLE	Internal	External						C1			
SDO CARD	System	Maintenance	1.5	0.68	0.02	0.0006	8.7	0.7	6.6	1/2 CTB	MLE	Internal	External						C1			
HATCH LATCH ASSEMBLY	System	Maintenance	1.4	0.64	0.05	0.0014	8.2	3	3.4	1/2 CTB	MLE	Internal	Internal						C1R			
HATCH LATCH ASSEMBLY	System	Maintenance	1.4	0.64	0.05	0.0014	8.2	3	3.4	1/2 CTB	MLE	Internal	Internal						C1R			
CCA, Interface Control, MSD	System	Maintenance	1.4	0.64	0.02	0.0006	8.7	0.7	6.6	1/2 CTB	MLE	Internal	Internal						C1			
CCA, Interface Control, MSD	System	Maintenance	1.4	0.64	0.02	0.0006	8.7	0.7	6.6	1/2 CTB	MLE	Internal	Internal						C1			
CCA, Interface Control, MSD	System	Maintenance	1.4	0.64	0.02	0.0006	8.7	0.7	6.6	1/2 CTB	MLE	Internal	Internal						C1			
CCA, Interface Control, MSD	System	Maintenance	1.4	0.64	0.02	0.0006	8.7	0.7	6.6	1/2 CTB	MLE	Internal	Internal						C1			
CCA, Interface Control, MSD	System	Maintenance	1.4	0.64	0.02	0.0006	8.7	0.7	6.6	1/2 CTB	MLE	Internal	Internal						C1			
CCA, Servo Control, MSD	System	Maintenance	1.4	0.64	0.02	0.0006	8.7	0.7	6.6	1/2 CTB	MLE	Internal	Internal						C1			
CCA, Servo Control, MSD	System	Maintenance	1.4	0.64	0.02	0.0006	8.7	0.7	6.6	1/2 CTB	MLE	Internal	Internal						C1			
CCA, Servo Control, MSD	System	Maintenance	1.4	0.64	0.02	0.0006	8.7	0.7	6.6	1/2 CTB	MLE	Internal	Internal						C1			
CCA, Servo Control, MSD	System	Maintenance	1.4	0.64	0.02	0.0006	8.7	0.7	6.6	1/2 CTB	MLE	Internal	Internal						C1			
CCA, Servo Control, MSD	System	Maintenance	1.4	0.64	0.02	0.0006	8.7	0.7	6.6	1/2 CTB	MLE	Internal	Internal						C1			
POWERED BOLT NUT ASSEMBLY	System	Maintenance	1.34	0.61	0.01	0.0003	1	4	1	1/2 CTB	MLE	Internal	Internal						C1R			
POWERED BOLT NUT ASSEMBLY	System	Maintenance	1.34	0.61	0.01	0.0003	1	4	1	1/2 CTB	MLE	Internal	Internal						C1R			
POWERED BOLT NUT ASSEMBLY	System	Maintenance	1.34	0.61	0.01	0.0003	1	4	1	1/2 CTB	MLE	Internal	Internal						C1R			
POWERED BOLT NUT ASSEMBLY	System	Maintenance	1.34	0.61	0.01	0.0003	1	4	1	1/2 CTB	MLE	Internal	Internal						C1R			
POWERED BOLT NUT ASSEMBLY	System	Maintenance	1.34	0.61	0.01	0.0003	1	4	1	1/2 CTB	MLE	Internal	External						C1R			
SEALS, HATCH	System	Maintenance	1.3	0.59	0.08	0.0023	26.5	26.5	0.2	M01	MLE	Internal	Internal						C1R			
SEALS, HATCH	System	Maintenance	1.3	0.59	0.08	0.0023	26.5	26.5	0.2	M01	MLE	Internal	Internal						C1R			
ESS IOCU CARD	System	Maintenance	1.3	0.59	0.02	0.0006	8.7	0.7	6.6	1/2 CTB	MLE	Internal	Internal						C1			
ESS IOCU CARD	System	Maintenance	1.3	0.59	0.02	0.0006	8.7	0.7	6.6	1/2 CTB	MLE	Internal	Internal						C1			
ESS IOCU CARD	System	Maintenance	1.3	0.59	0.02	0.0006	8.7	0.7	6.6	1/2 CTB	MLE	Internal	Internal						C1			
ESS IOCU CARD	System	Maintenance	1.3	0.59	0.02	0.0006	8.7	0.7	6.6	1/2 CTB	MLE	Internal	Internal						C1			
ESS IOCU CARD	System	Maintenance	1.3	0.59	0.02	0.0006	8.7	0.7	6.6	1/2 CTB	MLE	Internal	Internal						C1			
ESS IOCU CARD	System	Maintenance	1.3	0.59	0.02	0.0006	8.7	0.7	6.6	1/2 CTB	MLE	Internal	Internal						C1			
ESS IOCU CARD	System	Maintenance	1.3	0.59	0.02	0.0006	8.7	0.7	6.6	1/2 CTB	MLE	Internal	Internal						C1			
ESS IOCU CARD	System	Maintenance	1.3	0.59	0.02	0.0006	8.7	0.7	6.6	1/2 CTB	MLE	Internal	Internal						C1			
ESS IOCU CARD	System	Maintenance	1.3	0.59	0.02	0.0006	8.7	0.7	6.6	1/2 CTB	MLE	Internal	Internal						C1			
ESS IOCU CARD	System	Maintenance	1.3	0.59	0.02	0.0006	8.7	0.7	6.6	1/2 CTB	MLE	Internal	Internal						C1			
ESS IOCU CARD	System	Maintenance	1.3	0.59	0.02	0.0006	8.7	0.7	6.6	1/2 CTB	MLE	Internal	External						C1			
ESS IOCU CARD	System	Maintenance	1.3	0.59	0.02	0.0006	8.7	0.7	6.6	1/2 CTB	MLE	Internal	External						C1			
SPD 1553	System	Maintenance	1.3	0.59	0.02	0.0006	8.7	0.7	6.6	1/2 CTB	MLE	Internal	Internal						C1			
SPD 1553	System	Maintenance	1.3	0.59	0.02	0.0006	8.7	0.7	6.6	1/2 CTB	MLE	Internal	Internal						C1			
SPD 1553	System	Maintenance	1.3	0.59	0.02	0.0006	8.7	0.7	6.6	1/2 CTB	MLE	Internal	Internal						C1			
SPD 1553	System	Maintenance	1.3	0.59	0.02	0.0006	8.7	0.7	6.6	1/2 CTB	MLE	Internal	Internal						C1			
SPD 1553	System	Maintenance	1.3	0.59	0.02	0.0006	8.7	0.7	6.6	1/2 CTB	MLE	Internal	Internal						C1			
SPD 1553	System	Maintenance	1.3	0.59	0.02	0.0006	8.7	0.7	6.6	1/2 CTB	MLE	Internal	External						C1			
SPD 1553	System	Maintenance	1.3	0.59	0.02	0.0006	8.7	0.7	6.6	1/2 CTB	MLE	Internal	External						C1			
SPD 1553	System	Maintenance	1.3	0.59	0.02	0.0006	8.7	0.7	6.6	1/2 CTB	MLE	Internal	External						C1			
SPD 1553	System	Maintenance	1.3	0.59	0.02	0.0006	8.7	0.7	6.6	1/2 CTB	MLE	Internal	External						C1			

Cargo			Mass		Volume		Dimensions					Location										
Name	Major Type	Minor Type	Total Mass (no accommodations) lbs	Total Mass (no accommodations) kg	Total Volume (no accommodations) ft^3	Total Volume (no accommodations) m^3	length (external only) inches	Width (external only) inches	height (external only) inches	or Bag Size	Subcarrier/FSE	Preferred Launch Location	On-Orbit Location	ISS Transfer Restrictions	Resources Required	Environ constraints - Prelaunch, Pad, Ascent, Vehicle on-orbit,	Ascent/Return Qualification Limits	Hazard Type	Criticality Level	Response Period	Transfer Location	
SPD 1553	System	Maintenance	1.3	0.59	0.02	0.0006	8.7	0.7	6.6	1/2 CTB	MLE	Internal	External						C1			
SPD 1553	System	Maintenance	1.3	0.59	0.02	0.0006	8.7	0.7	6.6	1/2 CTB	MLE	Internal	External						C1			
SPD 1553	System	Maintenance	1.3	0.59	0.02	0.0006	8.7	0.7	6.6	1/2 CTB	MLE	Internal	External						C1			
SPD 1553	System	Maintenance	1.3	0.59	0.02	0.0006	8.7	0.7	6.6	1/2 CTB	MLE	Internal	External						C1			
SPD 1553	System	Maintenance	1.3	0.59	0.02	0.0006	8.7	0.7	6.6	1/2 CTB	MLE	Internal	External						C1			
SPD 1553	System	Maintenance	1.3	0.59	0.02	0.0006	8.7	0.7	6.6	1/2 CTB	MLE	Internal	External						C1			
SPD 1553	System	Maintenance	1.3	0.59	0.02	0.0006	8.7	0.7	6.6	1/2 CTB	MLE	Internal	External						C1			
SPD 1553	System	Maintenance	1.3	0.59	0.02	0.0006	8.7	0.7	6.6	1/2 CTB	MLE	Internal	External						C1			
SPD 1553	System	Maintenance	1.3	0.59	0.02	0.0006	8.7	0.7	6.6	1/2 CTB	MLE	Internal	External						C1			
SPD 1553	System	Maintenance	1.3	0.59	0.02	0.0006	8.7	0.7	6.6	1/2 CTB	MLE	Internal	External						C1			
SPD 1553	System	Maintenance	1.3	0.59	0.02	0.0006	8.7	0.7	6.6	1/2 CTB	MLE	Internal	External						C1			
SPD 1553	System	Maintenance	1.3	0.59	0.02	0.0006	8.7	0.7	6.6	1/2 CTB	MLE	Internal	External						C1			
SPD 1553 (ESSMDMs)	System	Maintenance	1.3	0.59	0.02	0.0006	8.7	0.7	6.6	1/2 CTB	MLE	Internal	Internal						C1			
SPD 1553 (ESSMDMs)	System	Maintenance	1.3	0.59	0.02	0.0006	8.7	0.7	6.6	1/2 CTB	MLE	Internal	Internal						C1			
SPD 1553 (ESSMDMs)	System	Maintenance	1.3	0.59	0.02	0.0006	8.7	0.7	6.6	1/2 CTB	MLE	Internal	Internal						C1			
SPD 1553 (ESSMDMs)	System	Maintenance	1.3	0.59	0.02	0.0006	8.7	0.7	6.6	1/2 CTB	MLE	Internal	Internal						C1			
SPD 1553 (ESSMDMs)	System	Maintenance	1.3	0.59	0.02	0.0006	8.7	0.7	6.6	1/2 CTB	MLE	Internal	Internal						C1			
SPD 1553 (ESSMDMs)	System	Maintenance	1.3	0.59	0.02	0.0006	8.7	0.7	6.6	1/2 CTB	MLE	Internal	Internal						C1			
SPD 1553 (ESSMDMs)	System	Maintenance	1.3	0.59	0.02	0.0006	8.7	0.7	6.6	1/2 CTB	MLE	Internal	Internal						C1			
SPD 1553 (ESSMDMs)	System	Maintenance	1.3	0.59	0.02	0.0006	8.7	0.7	6.6	1/2 CTB	MLE	Internal	Internal						C1			
SPD 1553 (ESSMDMs)	System	Maintenance	1.3	0.59	0.02	0.0006	8.7	0.7	6.6	1/2 CTB	MLE	Internal	Internal						C1			
SPD 1553 (ESSMDMs)	System	Maintenance	1.3	0.59	0.02	0.0006	8.7	0.7	6.6	1/2 CTB	MLE	Internal	Internal						C1			
SPD 1553 (ESSMDMs)	System	Maintenance	1.3	0.59	0.02	0.0006	8.7	0.7	6.6	1/2 CTB	MLE	Internal	Internal						C1			
SPD 1553 (ESSMDMs)	System	Maintenance	1.3	0.59	0.02	0.0006	8.7	0.7	6.6	1/2 CTB	MLE	Internal	Internal						C1			
SPD 1553 (ESSMDMs)	System	Maintenance	1.3	0.59	0.02	0.0006	8.7	0.7	6.6	1/2 CTB	MLE	Internal	Internal						C1			
SPD 1553 (ESSMDMs)	System	Maintenance	1.3	0.59	0.02	0.0006	8.7	0.7	6.6	1/2 CTB	MLE	Internal	Internal						C1			
SPD 1553 (ESSMDMs)	System	Maintenance	1.3	0.59	0.02	0.0006	8.7	0.7	6.6	1/2 CTB	MLE	Internal	External						C1			
SPD 1553 (ESSMDMs)	System	Maintenance	1.3	0.59	0.02	0.0006	8.7	0.7	6.6	1/2 CTB	MLE	Internal	External						C1			
SPD 1553 (Type 9 Configuration)	System	Maintenance	1.3	0.59	0.02	0.0006	8.7	0.7	6.6	1/2 CTB	MLE	Internal	External						C1			
SPD 1553 (Type 9 Configuration)	System	Maintenance	1.3	0.59	0.02	0.0006	8.7	0.7	6.6	1/2 CTB	MLE	Internal	External						C1			
SPD 1553 (Type 9 Configuration)	System	Maintenance	1.3	0.59	0.02	0.0006	8.7	0.7	6.6	1/2 CTB	MLE	Internal	External						C1			
SPD 1553 (Type 9 Configuration)	System	Maintenance	1.3	0.59	0.02	0.0006	8.7	0.7	6.6	1/2 CTB	MLE	Internal	External						C1			
SPD 1553 (ESSMDMs)	System	Maintenance	1.3	0.59	0.02	0.0006	8.7	0.7	6.6	1/2 CTB	MLE	Internal	External						C2			
PDGF GRAPPLE SHAFT	System	Maintenance	1.3	0.59	0.02	0.0006	16.6	1.27	1.27	1/2 CTB	MLE	Internal	External						C2			
PDGF GRAPPLE SHAFT	System	Maintenance	1.3	0.59	0.02	0.0006	16.6	1.27	1.27	1/2 CTB	MLE	Internal	External						C2			
Integrated Hose Assy	System	Maintenance	1.27	0.58	0.04	0.0011	19	2	2	1 CTB	MLE	Internal	Internal						C1R			
MDM IOCU CARD	System	Maintenance	1.23	0.56	0.02	0.0006	8.7	0.7	6.6	1/2 CTB	MLE	Internal	Internal						C1			
MDM IOCU CARD	System	Maintenance	1.23	0.56	0.02	0.0006	8.7	0.7	6.6	1/2 CTB	MLE	Internal	Internal						C1			
MDM IOCU CARD	System	Maintenance	1.23	0.56	0.02	0.0006	8.7	0.7	6.6	1/2 CTB	MLE	Internal	Internal						C1			
MDM IOCU CARD	System	Maintenance	1.23	0.56	0.02	0.0006	8.7	0.7	6.6	1/2 CTB	MLE	Internal	Internal						C1			
MDM IOCU CARD	System	Maintenance	1.23	0.56	0.02	0.0006	8.7	0.7	6.6	1/2 CTB	MLE	Internal	Internal						C1			
MDM IOCU CARD	System	Maintenance	1.23	0.56	0.02	0.0006	8.7	0.7	6.6	1/2 CTB	MLE	Internal	Internal						C1			
MDM IOCU CARD	System	Maintenance	1.23	0.56	0.02	0.0006	8.7	0.7	6.6	1/2 CTB	MLE	Internal	Internal						C1			
MDM IOCU CARD	System	Maintenance	1.23	0.56	0.02	0.0006	8.7	0.7	6.6	1/2 CTB	MLE	Internal	Internal						C1			
MDM IOCU CARD	System	Maintenance	1.23	0.56	0.02	0.0006	8.7	0.7	6.6	1/2 CTB	MLE	Internal	Internal						C1			
MDM IOCU CARD	System	Maintenance	1.23	0.56	0.02	0.0006	8.7	0.7	6.6	1/2 CTB	MLE	Internal	External						C1			
MDM IOCU CARD	System	Maintenance	1.23	0.56	0.02	0.0006	8.7	0.7	6.6	1/2 CTB	MLE	Internal	External						C1			

Cargo			Mass		Volume		Dimensions					Location										
Name	Major Type	Minor Type	Total Mass (no accommodations) lbs	Total Mass (no accommodations) kg	Total Volume (no accommodations) ft^3	Total Volume (no accommodations) m^3	length (external only) inches	Width (external only) inches	height (external only) inches	or Bag Size	Subcarrier/FSE	Preferred Launch Location	On-Orbit Location	ISS Transfer Restrictions	Resources Required	Environ constraints - Prelaunch, Pad, Ascent, Vehicle on-orbit,	Ascent/Return Qualification Limits	Hazard Type	Criticality Level	Response Period	Transfer Location	
MDM IOCU CARD	System	Maintenance	1.23	0.56	0.02	0.0006	8.7	0.7	6.6	1/2 CTB	MLE	Internal	External						C1			
MDM IOCU CARD	System	Maintenance	1.23	0.56	0.02	0.0006	8.7	0.7	6.6	1/2 CTB	MLE	Internal	External						C1			
MDM IOCU CARD	System	Maintenance	1.23	0.56	0.02	0.0006	8.7	0.7	6.6	1/2 CTB	MLE	Internal	External						C1			
MDM IOCU CARD	System	Maintenance	1.23	0.56	0.02	0.0006	8.7	0.7	6.6	1/2 CTB	MLE	Internal	External						C1			
MDM IOCU CARD	System	Maintenance	1.23	0.56	0.02	0.0006	8.7	0.7	6.6	1/2 CTB	MLE	Internal	External						C1			
MDM IOCU CARD	System	Maintenance	1.23	0.56	0.02	0.0006	8.7	0.7	6.6	1/2 CTB	MLE	Internal	External						C1			
MDM IOCU CARD	System	Maintenance	1.23	0.56	0.02	0.0006	8.7	0.7	6.6	1/2 CTB	MLE	Internal	External						C1			
MDM IOCU CARD	System	Maintenance	1.23	0.56	0.02	0.0006	8.7	0.7	6.6	1/2 CTB	MLE	Internal	External						C1			
MDM IOCU CARD	System	Maintenance	1.23	0.56	0.02	0.0006	8.7	0.7	6.6	1/2 CTB	MLE	Internal	External						C1			
MDM IOCU CARD	System	Maintenance	1.23	0.56	0.02	0.0006	8.7	0.7	6.6	1/2 CTB	MLE	Internal	External						C1			
MDM IOCU CARD	System	Maintenance	1.23	0.56	0.02	0.0006	8.7	0.7	6.6	1/2 CTB	MLE	Internal	External						C1			
MDM IOCU CARD	System	Maintenance	1.23	0.56	0.02	0.0006	8.7	0.7	6.6	1/2 CTB	MLE	Internal	External						C1			
MDM IOCU CARD	System	Maintenance	1.23	0.56	0.02	0.0006	8.7	0.7	6.6	1/2 CTB	MLE	Internal	External						C1			
MDM IOCU CARD	System	Maintenance	1.23	0.56	0.02	0.0006	8.7	0.7	6.6	1/2 CTB	MLE	Internal	External						C1			
MDM IOCU CARD (Type 9 Configuration)	System	Maintenance	1.23	0.56	0.02	0.0006	8.7	0.7	6.6	1/2 CTB	MLE	Internal	External						C1			
MDM IOCU CARD (Type 9 Configuration)	System	Maintenance	1.23	0.56	0.02	0.0006	8.7	0.7	6.6	1/2 CTB	MLE	Internal	External						C1			
MDM IOCU CARD (Type 9 Configuration)	System	Maintenance	1.23	0.56	0.02	0.0006	8.7	0.7	6.6	1/2 CTB	MLE	Internal	External						C1			
MDM IOCU CARD (Type 9 Configuration)	System	Maintenance	1.23	0.56	0.02	0.0006	8.7	0.7	6.6	1/2 CTB	MLE	Internal	External						C1			
CCA, I/O HRDL	System	Maintenance	1.2	0.54	0.02	0.0006	8.7	0.7	6.6	1/2 CTB	MLE	Internal	Internal						C1			
CCA, I/O HRDL	System	Maintenance	1.2	0.54	0.02	0.0006	8.7	0.7	6.6	1/2 CTB	MLE	Internal	Internal						C1			
CCA, I/O HRDL	System	Maintenance	1.2	0.54	0.02	0.0006	8.7	0.7	6.6	1/2 CTB	MLE	Internal	Internal						C1			
CCA, I/O HRDL	System	Maintenance	1.2	0.54	0.02	0.0006	8.7	0.7	6.6	1/2 CTB	MLE	Internal	Internal						C1			
CCA, I/O HRDL	System	Maintenance	1.2	0.54	0.02	0.0006	8.7	0.7	6.6	1/2 CTB	MLE	Internal	Internal						C1			
CCA, PROCESSOR, HRDL	System	Maintenance	1.2	0.54	0.02	0.0006	8.7	0.7	6.6	1/2 CTB	MLE	Internal	Internal						C1			
CCA, PROCESSOR, HRDL	System	Maintenance	1.2	0.54	0.02	0.0006	8.7	0.7	6.6	1/2 CTB	MLE	Internal	Internal						C1			
CCA, PROCESSOR, HRDL	System	Maintenance	1.2	0.54	0.02	0.0006	8.7	0.7	6.6	1/2 CTB	MLE	Internal	Internal						C1			
CCA, PROCESSOR, HRDL	System	Maintenance	1.2	0.54	0.02	0.0006	8.7	0.7	6.6	1/2 CTB	MLE	Internal	Internal						C1			
CCA, PROCESSOR, HRDL	System	Maintenance	1.2	0.54	0.02	0.0006	8.7	0.7	6.6	1/2 CTB	MLE	Internal	Internal						C1			
LIQUID SENSOR, HX	System	Maintenance	1.05	0.48	0.018	0.0005	3.68	2.15	3.92	1/2 CTB	MLE	Internal	Internal						C1R			
PRESSURE TRANSDUCER, ABSOLUTE	System	Maintenance	1.05	0.48	0.01	0.0003	6	1.6	1.6	1/2 CTB	MLE	Internal	Internal						C1R			
Screen, Inlet	System	Maintenance	1	0.45	0.07	0.002					MLE	Internal	Internal						C2			
Airlock S/W & Firmware	System	Maintenance	1	0.45	0.01	0.0003					MLE	Internal	Internal						C1R			
Strut Assembly	System	Maintenance	1	0.45	0.01	0.0003					MLE	Internal	Internal						C3			
REMOTE CONTROL, SYSTEM ON/OFF	System	Maintenance	0.94	0.43	0.03	0.0008	2.85	4.81	3.75	1/2 CTB	MLE	Internal	Internal						C2R			
REMOTE CONTROL, SYSTEM ON/OFF	System	Maintenance	0.94	0.43	0.03	0.0008	2.85	4.81	3.75	1/2 CTB	MLE	Internal	Internal						C2R			
HRDL, LOAD BOARD	System	Maintenance	0.9	0.41	0.02	0.0006	8.7	0.7	6.6	1/2 CTB	MLE	Internal	Internal						C1			
HRDL, LOAD BOARD	System	Maintenance	0.9	0.41	0.02	0.0006	8.7	0.7	6.6	1/2 CTB	MLE	Internal	Internal						C1			
HRDL, LOAD BOARD	System	Maintenance	0.9	0.41	0.02	0.0006	8.7	0.7	6.6	1/2 CTB	MLE	Internal	Internal						C1			
HRDL, LOAD BOARD	System	Maintenance	0.9	0.41	0.02	0.0006	8.7	0.7	6.6	1/2 CTB	MLE	Internal	Internal						C1			
HRDL, LOAD BOARD	System	Maintenance	0.9	0.41	0.02	0.0006	8.7	0.7	6.6	1/2 CTB	MLE	Internal	Internal						C1			
HRDL, LOAD BOARD	System	Maintenance	0.9	0.41	0.02	0.0006	8.7	0.7	6.6	1/2 CTB	MLE	Internal	Internal						C1			
HRDL, LOAD BOARD	System	Maintenance	0.9	0.41	0.02	0.0006	8.7	0.7	6.6	1/2 CTB	MLE	Internal	External						C1			
HRDL, LOAD BOARD	System	Maintenance	0.9	0.41	0.02	0.0006	8.7	0.7	6.6	1/2 CTB	MLE	Internal	External						C1			
MSD, LOAD BOARD	System	Maintenance	0.9	0.41	0.02	0.0006	8.7	0.7	6.6	1/2 CTB	MLE	Internal	Internal						C1			
MSD, LOAD BOARD	System	Maintenance	0.9	0.41	0.02	0.0006	8.7	0.7	6.6	1/2 CTB	MLE	Internal	Internal						C1			
MSD, LOAD BOARD	System	Maintenance	0.9	0.41	0.02	0.0006	8.7	0.7	6.6	1/2 CTB	MLE	Internal	Internal						C1			
MSD, LOAD BOARD	System	Maintenance	0.9	0.41	0.02	0.0006	8.7	0.7	6.6	1/2 CTB	MLE	Internal	Internal						C1			
MSD, LOAD BOARD	System	Maintenance	0.9	0.41	0.02	0.0006	8.7	0.7	6.6	1/2 CTB	MLE	Internal	Internal						C1			
MSD, LOAD BOARD	System	Maintenance	0.9	0.41	0.02	0.0006	8.7	0.7	6.6	1/2 CTB	MLE	Internal	Internal						C1			
MSD, LOAD BOARD	System	Maintenance	0.9	0.41	0.02	0.0006	8.7	0.7	6.6	1/2 CTB	MLE	Internal	Internal						C1			
MSD, LOAD BOARD	System	Maintenance	0.9	0.41	0.02	0.0006	8.7	0.7	6.6	1/2 CTB	MLE	Internal	External						C1			

Cargo			Mass		Volume		Dimensions					Location										
Name	Major Type	Minor Type	Total Mass (no accommodations) lbs	Total Mass (no accommodations) kg	Total Volume (no accommodations) ft^3	Total Volume (no accommodations) m^3	length (external only) inches	Width (external only) inches	height (external only) inches	or Bag Size	Subcarrier/FSE	Preferred Launch Location	On-Orbit Location	ISS Transfer Restrictions	Resources Required	Environ constraints - Prelaunch, Pad, Ascent, Vehicle on-orbit,,	Ascent/Return Qualification Limits	Hazard Type	Criticality Level	Response Period	Transfer Location	
MSD, LOAD BOARD	System	Maintenance	0.9	0.41	0.02	0.0006	8.7	0.7	6.6	1/2 CTB	MLE	Internal	External						C1			
INTERNAL LIGHTING-EMERG Strip 36"	System	Maintenance	0.87	0.39	0.021	0.0006	36	1	1	Rack	MLE	Internal	Internal						C1SR			
INTERNAL LIGHTING-EMERG Strip 36"	System	Maintenance	0.87	0.39	0.021	0.0006	36	1	1	Rack	MLE	Internal	Internal						C2R			
CAPTURE FITTING ASSY	System	Maintenance	0.86	0.39	0.01	0.0003	5.1	0.7	1.3	1/2 CTB	MLE	Internal	Internal						C2R			
CAPTURE FITTING ASSY	System	Maintenance	0.86	0.39	0.01	0.0003	5.1	0.7	1.3	1/2 CTB	MLE	Internal	Internal						C2R			
CAPTURE FITTING ASSY	System	Maintenance	0.86	0.39	0.01	0.0003	5.1	0.7	1.3	1/2 CTB	MLE	Internal	External						C2R			
Pressure Transducer	System	Maintenance	0.69	0.31	0.02	0.0006	4.5	3	5	1/2 CTB	MLE	Internal	Internal						C1R			
TENSION ROD ASSEMBLY	System	Maintenance	0.64	0.29	0.03	0.0008	1.1	3.5	11.3	1/2 CTB	MLE	Internal	Internal						C1R			
TENSION ROD ASSEMBLY	System	Maintenance	0.64	0.29	0.03	0.0008	1.1	3.5	11.3	1/2 CTB	MLE	Internal	Internal						C1R			
FILTER ELEMENT	System	Maintenance	0.6	0.27	0.01	0.0003	1.2	1.2	1.5	1/2 CTB	MLE	Internal	Internal						C1R			
FILTER ELEMENT	System	Maintenance	0.6	0.27	0.01	0.0003	1.2	1.2	1.5	1/2 CTB	MLE	Internal	Internal						C1R			
TEMPERATURE SENSOR ASSEMBLY	System	Maintenance	0.58	0.26	0.05	0.0014	4.12	4.75	4	1/2 CTB	MLE	Internal	Internal						C1R			
VALVE, MANUAL SAMPLE .125	System	Maintenance	0.54	0.24	0.02	0.0006	4	3	3	1/2 CTB	MLE	Internal	Internal						C1R			
VALVE, MANUAL SAMPLE .125	System	Maintenance	0.54	0.24	0.02	0.0006	4	3	3	1/2 CTB	MLE	Internal	Internal						C1R			
VALVE, MANUAL SAMPLE .125	System	Maintenance	0.54	0.24	0.02	0.0006	4	3	3	1/2 CTB	MLE	Internal	Internal						C1R			
VALVE, MANUAL SAMPLE .125	System	Maintenance	0.54	0.24	0.02	0.0006	4	3	3	1/2 CTB	MLE	Internal	Internal						C1R			
VALVE, MANUAL SAMPLE .125	System	Maintenance	0.54	0.24	0.02	0.0006	4	3	3	1/2 CTB	MLE	Internal	Internal						C1R			
VALVE, MANUAL SAMPLE .125	System	Maintenance	0.54	0.24	0.02	0.0006	4	3	3	1/2 CTB	MLE	Internal	Internal						C1R			
VALVE, MANUAL SAMPLE .125	System	Maintenance	0.54	0.24	0.02	0.0006	4	3	3	1/2 CTB	MLE	Internal	Internal						C3			
STOWAGE LATCH ASSEMBLY	System	Maintenance	0.5	0.23	0.023	0.0007	3.4	2.3	5.3	1/2 CTB	MLE	Internal	Internal						C1SR			
STOWAGE LATCH ASSEMBLY	System	Maintenance	0.5	0.23	0.023	0.0007	3.4	2.3	5.3	1/2 CTB	MLE	Internal	Internal						C1SR			
Pump Bypass Check Valve	System	Maintenance	0.5	0.23	0.011	0.0003	7.6	1.8	1.8	1/2 CTB	MLE	Internal	Internal						C1S			
Pump Bypass Check Valve	System	Maintenance	0.5	0.23	0.011	0.0003	7.6	1.8	1.8	1/2 CTB	MLE	Internal	Internal						C1S			
STAND ALONE TEMP SENSOR	System	Maintenance	0.4	0.18	0.01	0.0003	2.8	1.3	1.3	1/2 CTB	MLE	Internal	Internal						C3			
STAND ALONE TEMP SENSOR	System	Maintenance	0.4	0.18	0.01	0.0003	2.8	1.3	1.3	1/2 CTB	MLE	Internal	Internal						C3			
STAND ALONE TEMP SENSOR	System	Maintenance	0.4	0.18	0.01	0.0003	2.8	1.3	1.3	1/2 CTB	MLE	Internal	Internal						C3			
ROLLER ASSEMBLY	System	Maintenance	0.38	0.17	0.01	0.0003	2.2	1.3	2.4	1/2 CTB	MLE	Internal	Internal						C3			
ROLLER ASSEMBLY	System	Maintenance	0.38	0.17	0.01	0.0003	2.2	1.3	2.4	1/2 CTB	MLE	Internal	Internal						C3			
SOFT HANDLE ASSEMBLY	System	Maintenance	0.26	0.12	0.01	0.0003	8	0.8	0.8	1/2 CTB	MLE	Internal	Internal						C3			
SOFT HANDLE ASSEMBLY	System	Maintenance	0.26	0.12	0.01	0.0003	8	0.8	0.8	1/2 CTB	MLE	Internal	Internal						C3			
DCP Double Status Lights	System	Maintenance	0.01	0.00	0	0	0.01	0.01	0.01	1/2 CTB	MLE	Internal	Internal						C1			
DCP Double Status Lights	System	Maintenance	0.01	0.00	0	0	0.01	0.01	0.01	1/2 CTB	MLE	Internal	Internal						C1			
DCP Single Status Lights	System	Maintenance	0.01	0.00	0	0	0.01	0.01	0.01	1/2 CTB	MLE	Internal	Internal						C1			
DCP Single Status Lights	System	Maintenance	0.01	0.00	0	0	0.01	0.01	0.01	1/2 CTB	MLE	Internal	Internal						C1			
VALVE ASSY, 2.5 INCH INT. VACUUM-pm	System	Maintenance	0	0.00	0.19	0.0054	11	6.8	4.5	1/2 CTB	MLE	Internal	Internal						C1			
Sanitary hygienic equipment	System	resupply			5.6	0.1599	29.5	16.75	19.75	3 CTB	Bag	internal	Internal									
Crew Clothing	System	resupply			1.9	0.0529	19.75	16.75	9.75	1 CTB	Bag	internal	Internal									
Hygiene	System	resupply			1.9	0.0529	19.75	16.75	9.75	1 CTB	Bag	internal	Internal									
Towel and Napkins	System	resupply			1.9	0.0529	19.75	16.75	9.75	1 CTB	Bag	internal	Internal									
Office Supply/Printer Paper/Toner Cartridges	System	resupply			1.9	0.0529	19.75	16.75	9.75	1 CTB	Bag	internal	Internal									
Crew Preference	System	resupply			1.9	0.0529	19.75	16.75	9.75	1 CTB	Bag	internal	Internal									
Batteries	System	resupply			1.9	0.0529	19.75	16.75	9.75	1 CTB	Bag	internal	Internal									
Bar Code equipment	System	resupply			1.9	0.0529	19.75	16.75	9.75	1 CTB	Bag	internal	Internal									
Laptop computers	System	resupply			1.9	0.0529	19.75	16.75	9.75	1 CTB	Bag	internal	Internal									
Onboard documentation	System	resupply			1.9	0.0529	19.75	16.75	9.75	1 CTB	Bag	internal	Internal									
Housekeeping	System	resupply			1.9	0.0529	19.75	16.75	9.75	1 CTB	Bag	internal	Internal									
Imagery equipment and consumables	System	resupply			1.9	0.0529	19.75	16.75	9.75	1 CTB	Bag	internal	Internal									
Restraint and mobility aids	System	resupply			1.9	0.0529	19.75	16.75	9.75	1 CTB	Bag	internal	Internal									
Miscellaneous	System	resupply			1.9	0.0529	19.75	16.75	9.75	1 CTB	Bag	internal	Internal									
Ancillary equipment	System	resupply			1.9	0.0529	19.75	16.75	9.75	1 CTB	Bag	internal	Internal									
Crew Health Care System (CHeCS)	System	resupply			1.9	0.0529	19.75	16.75	9.75	1 CTB	Bag	internal	Internal									
Food containers	System	resupply			1.9	0.0529	19.75	16.75	9.75	1 CTB	Bag	internal	Internal									

Cargo			Mass		Volume		Dimensions					Location									
Name	Major Type	Minor Type	Total Mass (no accommodations) lbs	Total Mass (no accommodations) kg	Total Volume (no accommodations) ft^3	Total Volume (no accommodations) m^3	length (external only) inches	Width (external only) inches	height (external only) inches	or Bag Size	Subcarrier/FSE	Preferred Launch Location	On-Orbit Location	ISS Transfer Restrictions	Resources Required	Environ constraints - Prelaunch, Pad, Ascent, Vehicle on-orbit,	Ascent/Return Qualification Limits	Hazard Type	Criticality Level	Response Period	Transfer Location
Food supply system	System	resupply			1.9	0.0529	19.75	16.75	9.75	1 CTB	Bag	internal	Internal								
IVA tools	System	resupply			1.9	0.0529	19.75	16.75	9.75	1 CTB	Bag	internal	Internal								
Trash/waste equipment	System	resupply			1.9	0.0529	19.75	16.75	9.75	1 CTB	Bag	internal	Internal								
Trash/waste	System	resupply			1.9	0.0529	19.75	16.75	9.75	1 CTB	Bag	internal	Internal								
Station Detailed Test Objectives (SDTO)	System	resupply			1.9	0.0529	19.75	16.75	9.75	1 CTB	Bag	internal	Internal								
Water	System	resupply			1.9	0.0529	19.75	16.75	9.75	1 CTB	Bag	internal	Internal								
Water support equipment	System	resupply			1.9	0.0529	19.75	16.75	9.75	1 CTB	Bag	internal	Internal								
BRAKE HANDLE ASSY	System	Maintenance		0.00		0					MLE	Internal	External						C1R		
BRAKE HANDLE ASSY	System	Maintenance		0.00		0					MLE	Internal	External						C1R		
FRAME/BRAKE ASSEMBLY	System	Maintenance		0.00		0					MLE	Internal	External						C1R		
FRAME/BRAKE ASSEMBLY	System	Maintenance		0.00		0					MLE	Internal	External						C1R		
WHEEL BOGIE/BRAKE ASSY NADIR	System	Maintenance		0.00		0					MLE	Internal	External						C1R		
WHEEL BOGIE/BRAKE ASSY NADIR	System	Maintenance		0.00		0					MLE	Internal	External						C1R		
WHEEL BOGIE/BRAKE ASSY ZENITH	System	Maintenance		0.00		0					MLE	Internal	External						C1R		
WHEEL BOGIE/BRAKE ASSY ZENITH	System	Maintenance		0.00		0					MLE	Internal	External						C1R		
HATCH ASSEMBLY	System	Maintenance		0.00		0					MLE	Internal	Internal						C1SR		
HATCH ASSEMBLY	System	Maintenance		0.00		0					MLE	Internal	Internal						C1SR		
Electronics Unit	System	Maintenance		0.00		0					MLE	Internal	Internal						C2		
READY TO LATCH ASSEMBLY	System	Maintenance		0.00		0					MLE	Internal	Internal						C2		
READY TO LATCH ASSEMBLY	System	Maintenance		0.00		0					MLE	Internal	Internal						C2		
READY TO LATCH ASSEMBLY	System	Maintenance		0.00		0					MLE	Internal	Internal						C2		
Biocide Filter Assembly	System	Maintenance		0.00		0					MLE	Internal	Internal						C2R		
ARIS-ICE Stow	Utilization	M	*69.1*	31.34		0.074	n/a	n/a	n/a	1 CTB	Bag				n/a				C5		KSC
PCS-SE	Utilization	UG	*2.4*	1.1		0.001	n/a	n/a	n/a		Bag				n/a				C5		KSC
HRF-PuFF-Repair	Utilization	UL JSC	*1.0*	0.46		0.001	n/a	n/a	n/a		Bag				n/a				C5		KSC
Atomic Clock Ensemble in Space (ACES)	Utilization	European Spa	500.4	226.98	45.9	1.3	46	34	49	n/a	FRAM	External	External		active				C5		KSC
EXPORT	Utilization	ESA	500	227	46	1.3	45.98	34.01	49.01	n/a	FRAM	External	External		active	yes			C5		KSC
EuTEF (European Technology Exposure Facility)	Utilization	ESA	500	227	46	1.3	46.06	33.85	49.21	n/a	FRAM	External	External		active	yes			C5		KSC
SOLAR	Utilization	ESA	500	227	46	1.3	45.98	34.01	49.01	n/a	FRAM	External	External			n/a			C5		KSC
Photovoltaic Engineering Testbed (PET)	Utilization	Code M	496	225	52.26	1.48	7.28	3.14	3.93	n/a	FRAM	External	External		n/a				C5		KSC
FOCUS	Utilization	ESA	496	225	46	1.3	46	49	34	n/a	FRAM	External	External		active	n/a			C5		
Europa	Utilization	ASI (Italian Sp	496	225	8.5	0.24	8.07	7.2	7.67	n/a	FRAM	External	External		n/a	n/a			C5		KSC
SIXI	Utilization	DoD	330	150	28	0.78	0.472	0.413	0.244	n/a	FRAM	External	External		n/a				C5		KSC
MISSE-PEC 1	Utilization	M	*76.0*	34.47		0	n/a	n/a	n/a		Other	External	External		n/a				C5		KSC
MISSE-PEC 2	Utilization	M	*62.0*	28.12		0	n/a	n/a	n/a		Other	External	External		n/a				C5		KSC
TtANOS	Utilization	DoD	62	28	1.8	0.05	0.023	0.023	0.023	n/a	FRAM	External	External		n/a				C5		KSC
MISSE-IP3	Utilization	M	*61.0*	27.67		0	n/a	n/a	n/a		Other	External	External		n/a				C5		KSC
MISSE-IP4	Utilization	M	*61.0*	27.67		0	n/a	n/a	n/a		Other	External	External		n/a				C5		KSC
MISSE-CPA1	Utilization	M	*10.5*	4.76		0	n/a	n/a	n/a		Other	External	External		n/a				C5		KSC
SDRUMS-PM	Utilization	UM SPD	*320.1*	145.15		0	n/a	n/a	n/a		Quad MLE	Internal	Internal		n/a				C5		KSC
SDRUMS-C4	Utilization	UM SPD	*224.4*	101.76		0.132	n/a	n/a	n/a		Other	Internal	Internal		n/a				C5		KSC
HRF-STO4	Utilization	UL JSC	*224.0*	101.6		0.28	n/a	n/a	n/a	1 CTB	Bag	Internal	Internal		n/a				C5		KSC
MACE II	Utilization	M DoD	*194.4*	88.18		0.153	n/a	n/a	n/a	2 CTB	Bag	Internal	Internal		n/a				C5		KSC
CSLM	Utilization	UG	*189.0*	85.7		0.152	n/a	n/a	n/a	1 CTB	MLE	Internal	Internal		n/a				C5		KSC
ARIS-ICE	Utilization	M	*185.6*	84.17		0	n/a	n/a	n/a	n/a		Internal	Internal		n/a				C5		KSC
HRF-KIT-11A	Utilization	UL JSC	*180.4*	81.8		0.168	n/a	n/a	n/a		Bag	Internal	Internal		n/a				C5		KSC
MSG-STO-A	Utilization	UG	*165.4*	75		0.2264	n/a	n/a	n/a	1 CTB	Bag	Internal	Internal		n/a				C5		KSC
MSG-STO-A	Utilization	UG	*165.4*	75		0.2264	n/a	n/a	n/a	1 CTB	MLE	Internal	Internal		n/a				C5		KSC
Imagery-EUE	Utilization	Utilization	*150.0*	68.02		0.1275	n/a	n/a	n/a	1 CTB	Bag	Internal	Internal		n/a				C5		KSC
HRF-STO1R	Utilization	UL JSC	*145.5*	65.99		0.17	n/a	n/a	n/a	1 CTB	Bag	Internal	Internal		n/a				C5		KSC
PCS-TS1	Utilization	UG	*132.3*	60		0.113	n/a	n/a	n/a	10 MLE bag	Unpowered	Internal	Internal		n/a	yes			C5		KSC
IPCG-H	Utilization	UG	*132.3*	60	2	0.056	n/a	n/a	n/a	1 CTB	MLE	Internal	Internal		n/a				C5		KSC
HRF-Exp. Return	Utilization	UL JSC	*131.7*	59.72		0.215	n/a	n/a	n/a		Bag	Internal	Internal		n/a				C5		KSC

Cargo			Mass		Volume		Dimensions					Location										
Name	Major Type	Minor Type	Total Mass (no accommodations) lbs	Total Mass (no accommodations) kg	Total Volume (no accommodations) ft^3	Total Volume (no accommodations) m^3	length (external only) inches	Width (external only) inches	height (external only) inches	or Bag Size	Subcarrier/FSE	Preferred Launch Location	On-Orbit Location	ISS Transfer Restrictions	Resources Required	Environ constraints - Prelaunch, Pad, Ascent, Vehicle on-orbit,	Ascent/Return Qualification Limits	Hazard Type	Criticality Level	Response Period	Transfer Location	
HRFEUE2	Utilization	UL JSC	120.0	54.42		0.12	n/a	n/a	n/a	1 CTB	MLE	Internal	Internal		n/a				C5		KSC	
ZCG-FU	Utilization	UM SPD	120.0	54.42		0	n/a	n/a	n/a	M01	Double ML	Internal	Internal		n/a				C5		KSC	
PGBA	Utilization	UM SPD	120.0	54.4		0	n/a	n/a	n/a		Double ML	Internal	Internal		active	yes			C5		KSC	
PFMI-H	Utilization	UG	119.1	54		0.114	n/a	n/a	n/a	1 CTB	Other	Internal	Internal		n/a				C5		KSC	
DreamTime	Utilization	UM SPD	108.0	49		0	n/a	n/a	n/a	1 CTB	Bag	Internal	Internal		n/a				C5		KSC	
HRF-ULF1-Resupply	Utilization	UL JSC	97.0	44		0.467	n/a	n/a	n/a		Bag	Internal	Internal		n/a				C5		KSC	
HRF-Torso	Utilization	UL JSC	94.2	42.72		0.0736	n/a	n/a	n/a	M01	Bag	Internal	Internal		n/a	yes			C5		KSC	
MISSE-PEC4	Utilization	M	90.0	40.82		0.12	n/a	n/a	n/a		Other	Internal	Internal		n/a				C5		KSC	
MSG-STO-11A	Utilization	UG	88.2	40		0.0566	n/a	n/a	n/a		Bag	Internal	Internal		n/a				C5		KSC	
ARIS-ICE 2	Utilization	M	85.6	38.8	2	0.0566	n/a	n/a	n/a	n/a		Internal	Internal		n/a				C5		KSC	
PCS-AH	Utilization	UG	82.0	37.18		0.09	n/a	n/a	n/a		TBD	Internal	Internal		n/a				C5		KSC	
HRF-WS1(4PU)	Utilization	UL JSC	79.4	36		0.034	n/a	n/a	n/a			Internal	Internal		n/a	yes			C5		KSC	
HRF-KIT-UF-2	Utilization	UL JSC	73.0	33.1		0.14	n/a	n/a	n/a		Bag	Internal	Internal		n/a				C5		KSC	
CPCG-H	Utilization	UM SPD	72.1	32.7	2	0.056	n/a	n/a	n/a	n/a	MLE	Internal	Internal		active	yes			C5		KSC	
CPCG-H	Utilization	UM SPD	72.0	32.65	2	0.0567	n/a	n/a	n/a	1 CTB	MLE	Internal	Internal		n/a				C5		KSC	
CPCG-VL	Utilization	UM SPD	72.0	32.65		0	n/a	n/a	n/a		Bag	Internal	Internal		n/a				C5		KSC	
CPCG-H	Utilization	UM SPD	70.6	32	2	0.056	n/a	n/a	n/a	1 CTB	MLE	Internal	Internal		active	yes			C5		KSC	
MISSE-PEC3	Utilization	M	70.1	31.8		0.12	n/a	n/a	n/a	n/a	FRAM	Internal	External		n/a				C5		KSC	
CGBA-7A -D	Utilization	UM SPD	70.0	31.75	2	0.0567	n/a	n/a	n/a		MLE	Internal	Internal		n/a				C5		KSC	
CGBA-F	Utilization	UM SPD	70.0	31.74	2	0.0567	n/a	n/a	n/a	1 CTB	MLE	Internal	Internal		active	yes			C5		KSC	
ADSEP-SMP	Utilization	UM SPD	70.0	31.74	2	0.056	n/a	n/a	n/a	1 CTB	MLE	Internal	Internal		active	yes			C5		KSC	
CBIX	Utilization	UM SPD	70.0	31.74	2	0.056	n/a	n/a	n/a	1 CTB	MLE	Internal	Internal		active	yes			C5		KSC	
BSTC	Utilization	UG	69.4	31.49	2	0.0566	n/a	n/a	n/a	1 CTB	MLE	Internal	Internal		n/a				C5		KSC	
BTR (1)	Utilization	UG	69.4	31.49	2	0.0566	n/a	n/a	n/a	1 CTB	MLE	Internal	Internal		n/a	yes			C5		KSC	
RWPS-M	Utilization	UG	69.4	31.49	2	0.056	n/a	n/a	n/a	1 CTB	MLE	Internal	Internal		n/a	yes			C5		KSC	
RWPS-V	Utilization	UG	69.4	31.49	2	0.056	n/a	n/a	n/a	1 CTB	MLE	Internal	Internal		n/a	yes			C5		KSC	
BCSS-A	Utilization	UG	69.4	31.49	2	0.056	n/a	n/a	n/a	1 CTB	MLE	Internal	Internal		n/a	yes			C5		KSC	
BCSS-W	Utilization	UG	69.4	31.49	2	0.056	n/a	n/a	n/a	1 CTB	MLE	Internal	Internal		n/a	yes			C5		KSC	
BCSS-C	Utilization	UG	69.4	31.49	2	0.056	n/a	n/a	n/a	1 CTB	MLE	Internal	Internal		n/a	yes			C5		KSC	
BTR (2)	Utilization	UG	69.4	31.49		0	n/a	n/a	n/a	n/a	MLE	Internal	Internal		active	yes			C5		KSC	
PCG-STES	Utilization	UG	69.0	31.3	2	0.056	n/a	n/a	n/a	n/a	MLE	Internal	Internal		active	yes			C5		KSC	
Tech Demo	Utilization	UG	69.0	31.29	2	0.056	n/a	n/a	n/a		MLE	Internal	Internal		n/a				C5		KSC	
DCPCG-T	Utilization	UG	68.8	31.19	2	0.056	n/a	n/a	n/a	n/a	MLE	Internal	Internal		active	yes			C5		KSC	
DCPCG-V	Utilization	UG	68.8	31.19	2	0.056	n/a	n/a	n/a	n/a	MLE	Internal	Internal		active	yes			C5		KSC	
HRF-Resupply	Utilization	UL JSC	68.4	31		0.158	n/a	n/a	n/a		Bag	Internal	Internal		n/a				C5		KSC	
CRIM-MPLM	Utilization	UM SPD	68.4	31	2	0.0566	n/a	n/a	n/a	1 CTB	MLE	Internal	Internal		active	yes			C5		KSC	
ZCG-SS8A	Utilization	UM SPD	66.2	30	2	0.057	n/a	n/a	n/a	1 CTB	MLE	Internal	Internal		n/a	yes			C5		KSC	
IPCG-S	Utilization	UG	66.2	30	2	0.056	n/a	n/a	n/a	1 CTB	MLE	Internal	Internal		n/a	yes			C5		KSC	
SDRUMS-ARB	Utilization	UM SPD	66.0	29.92		0.1492	n/a	n/a	n/a		Other	Internal	Internal		n/a				C5		KSC	
ADVASC-GC	Utilization	UM SPD	65.5	29.7		0.0566	n/a	n/a	n/a		Bag	Internal	Internal		n/a	yes			C5		KSC	
MISSE-SWC3	Utilization	M	64.5	29.26		0	n/a	n/a	n/a			Internal	Internal		n/a				C5		KSC	
DCPCG-C-MPLM	Utilization	UG	63.5	28.8	2	0.0566	n/a	n/a	n/a	1 CTB	MLE	Internal	Internal		n/a				C5		KSC	
DCPCG-C	Utilization	UG	63.5	28.8	2	0.056	n/a	n/a	n/a	n/a	MLE	Internal	Internal		n/a				C5		KSC	
CBTM-AEM	Utilization	UM SPD	62.0	28.1	2	0.056	n/a	n/a	n/a	n/a	MLE	Internal	Internal		active	yes			C5		KSC	
ZCG-SS	Utilization	UM SPD	60.2	27.3	2	0.056	n/a	n/a	n/a	1/2 CTB	MLE	Internal	Internal		n/a	yes			C5		KSC	
HRF-Dewar	Utilization	UL JSC	60.0	27.21	2	0.5667	n/a	n/a	n/a	n/a	MLE	Internal	Internal		n/a	yes			C5		KSC	
MEPSII-ASSY	Utilization	UM SPD	57.9	26.26		0.058	n/a	n/a	n/a	n/a	Other	Internal	Internal		n/a				C5		KSC	
ARIS-ICE 1	Utilization	M	57.6	26.1	2	0.0566	n/a	n/a	n/a	1 CTB	MLE	Internal	Internal		n/a				C5		KSC	
MSG-InSPACE-H	Utilization	UG	57.3	26		0.112	n/a	n/a	n/a	1 CTB	MLE	Internal	Internal		n/a				C5		KSC	
SDRUMS-PCEM	Utilization	UM SPD	57.2	25.95	2	0.056	n/a	n/a	n/a	1 CTB	MLE	Internal	Internal		n/a				C5		KSC	
CGBA	Utilization	UM SPD	56.0	25.4	2	0.056	n/a	n/a	n/a	n/a	MLE	Internal	Internal		active	yes			C5		KSC	
HRF-Sample Return	Utilization	UL JSC	55.3	25.1		0	n/a	n/a	n/a	1 CTB	Bag	Internal	Internal		n/a	yes			C5		KSC	
G-Limit	Utilization	UG	55.1	24.99	2	0.056	n/a	n/a	n/a	1 CTB	MLE	Internal	Internal		n/a				C5		KSC	
G-Limit-SA	Utilization	UG	55.1	24.99	2	0.056	n/a	n/a	n/a	1 CTB	MLE	Internal	Internal		n/a				C5		KSC	

Cargo			Mass		Volume		Dimensions					Location										
Name	Major Type	Minor Type	Total Mass (no accommodations) lbs	Total Mass (no accommodations) kg	Total Volume (no accommodations) ft^3	Total Volume (no accommodations) m^3	length (external only) inches	Width (external only) inches	height (external only) inches	or Bag Size	Subcarrier/FSE	Preferred Launch Location	On-Orbit Location	ISS Transfer Restrictions	Resources Required	Environ constraints - Prelaunch, Pad, Ascent, Vehicle on-orbit,	Ascent/Return Qualification Limits	Hazard Type	Criticality Level	Response Period	Transfer Location	
G-Limit	Utilization	UG	*55.1*	24.99	2	0.056	n/a	n/a	n/a	1 CTB	MLE	Internal	Internal		n/a				C5		KSC	
G-Limit-SA	Utilization	UG	*55.1*	24.99	2	0.056	n/a	n/a	n/a	1 CTB	MLE	Internal	Internal		n/a				C5		KSC	
ADVASC-SS	Utilization	UM SPD	*54.7*	24.8	2	0.0566	n/a	n/a	n/a	n/a	MLE	Internal	Internal		n/a	yes			C5		KSC	
PCG-EGN-A	Utilization	UG	*54.0*	24.5		0	n/a	n/a	n/a	n/a	MLE	Internal	Internal		n/a	yes		cor	C5		KSC	
BTR (2) UPWR	Utilization	UG	*53.6*	24.3	2	0.056	n/a	n/a	n/a	n/a	MLE	Internal	Internal		n/a				C5		KSC	
HRF-GASMAPCal-Mod(4PU)	Utilization	UL JSC	*52.9*	24		0.034	n/a	n/a	n/a		Bag	Internal	Internal		n/a				C5		KSC	
WORF-Out. H/W	Utilization	Utilization	*52.8*	23.95		0.0616	n/a	n/a	n/a		Bag	Internal	Internal		n/a				C5		KSC	
SDRUMS-APEM	Utilization	UM SPD	*50.4*	22.87	2	0.056	n/a	n/a	n/a	1 CTB	MLE	Internal	Internal		n/a				C5		KSC	
HRF-Res W/O Crew	Utilization	UL JSC	*50.3*	22.8		0.114	n/a	n/a	n/a		Bag	Internal	Internal		n/a				C5		KSC	
SDRUMS-S2	Utilization	UM SPD	*48.5*	22		0.068	n/a	n/a	n/a		Other	Internal	Internal		n/a				C5		KSC	
MSG-CSLM-2-SPU4	Utilization	UG	*48.5*	22		0.05	n/a	n/a	n/a	1 CTB	MLE	Internal	Internal		n/a	yes			C5		KSC	
HRF-PUF-7A1A	Utilization	UL JSC	*48.1*	21.8		0.0842	n/a	n/a	n/a	1 CTB	Bag	Internal	Internal		n/a				C5		KSC	
MSG-InSPACE	Utilization	UG	*46.7*	21.2		0	n/a	n/a	n/a	1 CTB	Bag	Internal	Internal		n/a	yes			C5		KSC	
SUBSA	Utilization	UG	*46.3*	21		0.143	n/a	n/a	n/a	1 CTB	MLE	Internal	Internal		n/a				C5		KSC	
SUBSA	Utilization	UG	*46.3*	21		0.143	n/a	n/a	n/a		MLE	Internal	Internal		n/a				C5		KSC	
PCG-BAG	Utilization	UG	*46.3*	21	2	0.0566	n/a	n/a	n/a	1 CTB	MLE	Internal	Internal		n/a	yes			C5		KSC	
PFM-L	Utilization	UG	*45.0*	20.4		0.033	n/a	n/a	n/a	1 CTB	MLE	Internal	Internal		n/a	yes			C5		KSC	
KSC-GN2-A	Utilization	UL ARC	*44.3*	20.11		0.1131	n/a	n/a	n/a	n/a	MLE	Internal	Internal		n/a	yes		cor	C5		KSC	
SDRUMS-IPM	Utilization	UM SPD	*43.1*	19.55	2	0.056	n/a	n/a	n/a	1 CTB	MLE	Internal	Internal		n/a				C5		KSC	
RackSpares-6A	Utilization	Utilization	*43.0*	19.51		0.0223	n/a	n/a	n/a	1 CTB	Bag	Internal	Internal		n/a				C5		KSC	
ARCTIC-MPLM	Utilization	UL ARC	*43.0*	19.5		0.0566	n/a	n/a	n/a	M01	Bag	Internal	Internal		n/a				C5		KSC	
ARCTIC	Utilization	UL ARC	*43.0*	19.5		0	n/a	n/a	n/a			Internal	Internal		n/a				C5		KSC	
HRF-Kit	Utilization	UL JSC	*42.8*	19.4		0.091	n/a	n/a	n/a		Bag	Internal	Internal		n/a				C5		KSC	
BPS-ASK2A	Utilization	UL ARC	*39.0*	17.7		0.04	n/a	n/a	n/a	1 CTB	N/A	Internal	Internal		n/a	yes			C5		KSC	
ADSEP-PU	Utilization	UM SPD	*38.0*	17.23		0	n/a	n/a	n/a		Bag	Internal	Internal		n/a				C5		KSC	
GSM	Utilization	UG	*37.0*	16.78		0.028	n/a	n/a	n/a	n/a	MLE	Internal	Internal		n/a				C5		KSC	
SDRUMS-AGM	Utilization	UM SPD	*36.8*	16.69	2	0.056	n/a	n/a	n/a		MLE	Internal	Internal		n/a				C5		KSC	
CPCG-VD	Utilization	UM SPD	*36.0*	16.32		0	n/a	n/a	n/a		Bag	Internal	Internal		n/a				C5		KSC	
HRF-RNL-7A1A	Utilization	UL JSC	*35.5*	16.1		0.0729	n/a	n/a	n/a	1 CTB	Bag	Internal	Internal		n/a				C5		KSC	
RWPS-C	Utilization	UG	*35.3*	16	2	0.056	n/a	n/a	n/a	1 CTB	MLE	Internal	Internal		n/a	yes			C5		KSC	
Barrier-Assy	Utilization	Utilization	*35.0*	15.86		0.01	n/a	n/a	n/a		Bag	Internal	Internal		n/a				C5		KSC	
BCSS-5A	Utilization	UG	*34.2*	15.5	2	0.056	n/a	n/a	n/a	1 CTB	MLE	Internal	Internal		n/a	yes			C5		KSC	
MSG-CSLM-2-SC4	Utilization	UG	*33.1*	15		0.03	n/a	n/a	n/a		Bag	Internal	Internal		n/a	yes			C5		KSC	
G-Limit-SD	Utilization	UG	*33.1*	15		0.028	n/a	n/a	n/a	1 CTB	MLE	Internal	Internal		n/a				C5		KSC	
BPS-ASK3A	Utilization	UL ARC	*32.6*	14.8		0.045	n/a	n/a	n/a	1 CTB	N/A	Internal	Internal		n/a	yes			C5		KSC	
STELSYS-S	Utilization	UM SPD	*30.2*	13.7		0.028	n/a	n/a	n/a		Bag	Internal	Internal		n/a				C5		KSC	
HPA	Utilization	M	*30.0*	13.6		0.034	n/a	n/a	n/a		Bag	Internal	Internal		n/a				C5		KSC	
EPO-6	Utilization	M	*30.0*	13.6		0.028	n/a	n/a	n/a	1/2 CTB	Bag	Internal	Internal		n/a				C5		KSC	
EPO-5	Utilization	M	*30.0*	13.6		0.028	n/a	n/a	n/a		Bag	Internal	Internal		n/a				C5		KSC	
BPS-FZR	Utilization	UL ARC	*30.0*	13.6		0	n/a	n/a	n/a	n/a	MLE	Internal	Internal		n/a	yes			C5		KSC	
BCSS-4	Utilization	UG	*29.5*	13.4		0	n/a	n/a	n/a	n/a	Bag	Internal	Internal		n/a	yes			C5		KSC	
DreamTime-Batteries	Utilization	UM SPD	*28.2*	12.8		0.0066	n/a	n/a	n/a	1 CTB	Bag	Internal	Internal		n/a				C5		KSC	
CRIM	Utilization	UM SPD	*28.0*	12.7	2	0.0567	n/a	n/a	n/a	1 CTB	MLE	Internal	Internal		n/a				C5		KSC	
MEPS	Utilization	UM SPD	*27.9*	12.65	2	0.0567	n/a	n/a	n/a	1 CTB	MLE	Internal	Internal		n/a				C5		KSC	
SDRUMS-DT4	Utilization	UM SPD	*26.4*	11.97		0.024	n/a	n/a	n/a		Other	Internal	Internal		n/a				C5		KSC	
HRF-Res W/Crew	Utilization	UL JSC	*26.2*	11.9		0.04	n/a	n/a	n/a	1 CTB	Bag	Internal	Internal		n/a				C5		KSC	
BCSS-5D	Utilization	UG	*26.0*	11.8	2	0.0566	n/a	n/a	n/a	1 CTB	MLE	Internal	Internal		n/a				C5		KSC	
BPS-ASK1A	Utilization	UL ARC	*25.1*	11.4		0.045	n/a	n/a	n/a	1 CTB	N/A	Internal	Internal		n/a	yes			C5		KSC	
BCSS-R	Utilization	UG	*24.0*	10.9	2	0.0566	n/a	n/a	n/a	1 CTB	MLE	Internal	Internal		n/a				C5		KSC	
MSG-CSLM-AE	Utilization	UG	*22.1*	10		0.03	n/a	n/a	n/a	1 CTB	MLE	Internal	Internal		n/a				C5		KSC	
HRF--9A-EXP	Utilization	UL JSC	*22.1*	10		0.028	n/a	n/a	n/a	1 CTB	Bag	Internal	Internal		n/a				C5		KSC	
MSG-Samples	Utilization	UG	*21.6*	9.8		0.023	n/a	n/a	n/a	1 CTB	MLE	Internal	Internal		n/a				C5		KSC	
BCSS-1	Utilization	UG	*21.2*	9.6		0	n/a	n/a	n/a	1 CTB	MLE	Internal	Internal		n/a				C5		KSC	
MISSE CPA	Utilization	M	*20.1*	9.1		0.01	n/a	n/a	n/a	1 CTB	Other	Internal	Internal		n/a				C5		KSC	

Cargo			Mass		Volume		Dimensions					Location										
Name	Major Type	Minor Type	Total Mass (no accommodations) lbs	Total Mass (no accommodations) kg	Total Volume (no accommodations) ft^3	Total Volume (no accommodations) m^3	length (external only) inches	Width (external only) inches	height (external only) inches	or Bag Size	Subcarrier/FSE	Preferred Launch Location	On-Orbit Location	ISS Transfer Restrictions	Resources Required	Environ constraints - Prelaunch, Pad, Ascent, Vehicle on-orbit,	Ascent/Return Qualification Limits	Hazard Type	Criticality Level	Response Period	Transfer Location	
MISSE CPA3	Utilization	M	*20.0*	9.07		0.01	n/a	n/a	n/a		Other	Internal	Internal		n/a				C5		KSC	
MISSE CPA4	Utilization	M	*20.0*	9.07		0.01	n/a	n/a	n/a		Other	Internal	Internal		n/a				C5		KSC	
CBOSS	Utilization	UM SPD	*19.8*	9	2	0.0567	n/a	n/a	n/a	1 CTB	MLE	Internal	Internal		n/a				C5		KSC	
CBOSS-ULF1	Utilization	UG	*19.8*	9	2	0.0567	n/a	n/a	n/a	1 CTB	MLE	Internal	Internal		n/a				C5		KSC	
HRF-Renal/Sam.11A	Utilization	UL JSC	*18.1*	8.2		0.029	n/a	n/a	n/a		Bag	Internal	Internal		n/a	yes			C5		KSC	
MSG-CSLM-2-ECU	Utilization	UG	*17.6*	8		0.018	n/a	n/a	n/a	1 CTB	MLE	Internal	Internal		n/a	yes			C5		KSC	
H-Reflex-1	Utilization	UL JSC	*17.6*	7.98		0.019	n/a	n/a	n/a	1 CTB	MLE	Internal	Internal		n/a				C5		KSC	
HRF--9A-SAM	Utilization	UL JSC	*17.4*	7.9		0.025	n/a	n/a	n/a	1 CTB	Bag	Internal	Internal		n/a	yes			C5		KSC	
HRF-SCSI-HD	Utilization	UL JSC	*17.0*	7.7		0.0283	n/a	n/a	n/a	1/2 CTB	Bag	Internal	Internal		n/a				C5		KSC	
CGBA-Samples	Utilization	UM SPD	*16.5*	7.5		0.022	n/a	n/a	n/a		MLE	Internal	Internal		n/a				C5		KSC	
HRF-MIDDECK	Utilization	UL JSC	*15.9*	7.2		0.029	n/a	n/a	n/a		Bag	Internal	Internal		n/a				C5		KSC	
PCS-MDS-R1	Utilization	UG	*15.3*	6.95		0.0047	n/a	n/a	n/a		Bag	Internal	Internal		n/a				C5		KSC	
PCS-MDS-R2	Utilization	UG	*15.3*	6.95		0.0047	n/a	n/a	n/a		Bag	Internal	Internal		n/a				C5		KSC	
HRF-KCIT-3	Utilization	UL JSC	*14.6*	6.6		0.022	n/a	n/a	n/a	1/2 CTB	Bag	Internal	Internal		n/a				C5		KSC	
M-Kit I2	Utilization	UL JSC	*12.7*	5.76		0.012	n/a	n/a	n/a	1/2 CTB	Bag	Internal	Internal		n/a				C5		KSC	
HRF-Data	Utilization	UL JSC	*12.3*	5.6		0.017	n/a	n/a	n/a		Bag	Internal	Internal		n/a				C5		KSC	
MUFF-STES	Utilization	UG	*11.6*	5.26		0.016	n/a	n/a	n/a	n/a	MLE	Internal	Internal		n/a				C5		KSC	
PCG-STES-MUFFLERS	Utilization	UG	*11.6*	5.26		0.007	n/a	n/a	n/a	1 CTB	MLE	Internal	Internal		n/a				C5		KSC	
EPO-5	Utilization	M	*11.0*	5		0.028	n/a	n/a	n/a	1 CTB	Bag	Internal	Internal		n/a				C5		KSC	
PCS-MDS-R3	Utilization	UG	*9.9*	4.5		0.006	n/a	n/a	n/a		Bag	Internal	Internal		n/a				C5		KSC	
PCS-HD	Utilization	UG	*9.9*	4.5		0.006	n/a	n/a	n/a	1/2 CTB	Bag	Internal	Internal		n/a				C5		KSC	
Crew-HDW2	Utilization	UL JSC	*9.8*	4.44		0.002	n/a	n/a	n/a	1 CTB	Bag	Internal	Internal		n/a				C5		KSC	
HRF-NTDP&MDU	Utilization	UL JSC	*9.7*	4.4		0.0006	n/a	n/a	n/a	1/2 CTB	Bag	Internal	Internal		n/a				C5		KSC	
PERS	Utilization	Utilization	*9.6*	4.37		0.0198	n/a	n/a	n/a	1/2 CTB	Bag	Internal	Internal		n/a				C5		KSC	
HRF-MediaK-I3	Utilization	UL JSC	*9.5*	4.29		0.0133	n/a	n/a	n/a	1 CTB	Bag	Internal	Internal		n/a				C5		KSC	
HRF-MediaK-I5	Utilization	UL JSC	*9.5*	4.29		0.0133	n/a	n/a	n/a		Bag	Internal	Internal		n/a				C5		KSC	
PGBA-S1	Utilization	UM SPD	*8.8*	4		0.0283	n/a	n/a	n/a	n/a	Double ML	Internal	Internal		n/a	yes			C5		KSC	
PGBA-S1	Utilization	UM SPD	*8.8*	4		0	n/a	n/a	n/a		Bag	Internal	Internal		n/a				C5		KSC	
MUFF-PGBA	Utilization	UM SPD	*8.6*	3.9		0.016	n/a	n/a	n/a		Bag	Internal	Internal		n/a				C5		KSC	
HRF-I6 Media Kit	Utilization	UL JSC	*8.6*	3.9		0.012	n/a	n/a	n/a		Bag	Internal	Internal		n/a				C5		KSC	
LSE-TLD	Utilization	UL ARC	*6.6*	2.99		0.006	n/a	n/a	n/a	1/2 CTB	Bag	Internal	Internal		n/a	yes			C5		KSC	
HRF-Renal	Utilization	UL JSC	*6.3*	2.85		0.011	n/a	n/a	n/a	1 CTB	Bag	Internal	Internal		n/a				C5		KSC	
MUFF-CPCG-H	Utilization	UM SPD	*5.8*	2.63		0.008	n/a	n/a	n/a	n/a	MLE	Internal	Internal		n/a				C5		KSC	
B-Ball Kit 1	Utilization	UL JSC	*5.7*	2.58		0.004	n/a	n/a	n/a	1 CTB	Bag	Internal	Internal		n/a				C5		KSC	
LSE-DT	Utilization	Utilization	*5.6*	2.52		0.003	n/a	n/a	n/a	1/2 CTB	Bag	Internal	Internal		n/a				C5		KSC	
Edu-SGK	Utilization	M	*5.0*	2.26		0.0142	n/a	n/a	n/a	1/2 CTB	Bag	Internal	Internal		n/a	yes			C5		KSC	
MUFF-CGBA	Utilization	UM SPD	*4.4*	2		0.008	n/a	n/a	n/a	n/a	MLE	Internal	Internal		n/a				C5		KSC	
HRF-Renal/Samples	Utilization	UL JSC	*4.4*	2		0.007	n/a	n/a	n/a	1/2 CTB	Bag	Internal	Internal		n/a	yes			C5		KSC	
MSG-InSPACE-S	Utilization	UG	*4.4*	2		0.002	n/a	n/a	n/a	1 CTB	MLE	Internal	Internal		n/a				C5		KSC	
B-Ball Kit 2	Utilization	UL JSC	*3.9*	1.77		0.004	n/a	n/a	n/a	1 CTB	Bag	Internal	Internal		n/a				C5		KSC	
ADVASC-S3	Utilization	UM SPD	*3.7*	1.7		0.019	n/a	n/a	n/a	1/2 CTB	Bag	Internal	Internal		n/a				C5		KSC	
LSE-DT	Utilization	UG	*3.0*	1.36		0.0013	n/a	n/a	n/a		Bag	Internal	Internal		n/a				C5		KSC	
SAMS-HD	Utilization	UG	*2.7*	1.23		0.001	n/a	n/a	n/a		Bag	Internal	Internal		n/a				C5		KSC	
DreamTime-Tapes	Utilization	UM SPD	*2.6*	1.2		0.0024	n/a	n/a	n/a	1 CTB	Bag	Internal	Internal		n/a	yes			C5		KSC	
ADVASC-S2	Utilization	UM SPD	*2.5*	1.14		0.007	n/a	n/a	n/a	1/2 CTB	Bag	Internal	Internal		n/a				C5		KSC	
ADVASC-S2A	Utilization	UM SPD	*2.5*	1.12		0.0071	n/a	n/a	n/a	1/2 CTB	Bag	Internal	Internal		n/a				C5		KSC	
SAMS-SE	Utilization	UG	*2.4*	1.1		0.001	n/a	n/a	n/a		TBD	Internal	Internal		n/a				C5		KSC	
ADVASC-S3A	Utilization	UM SPD	*2.4*	1.07		0.0156	n/a	n/a	n/a	1/2 CTB	Bag	Internal	Internal		n/a				C5		KSC	
RENAL-k/s	Utilization	UL JSC	*2.2*	1		0.0036	n/a	n/a	n/a	1 CTB	Bag	Internal	Internal		n/a				C5		KSC	
LSE-PNTD	Utilization	UL ARC	*2.0*	0.9		0.003	n/a	n/a	n/a	1/2 CTB	Bag	Internal	Internal		n/a	yes			C5		KSC	
PCG-STES-CABLES	Utilization	UG	*2.0*	0.9		0.001	n/a	n/a	n/a	1 CTB	MLE	Internal	Internal		n/a				C5		KSC	
LSE-TLD 2	Utilization	UL ARC	*1.9*	0.86		0.003	n/a	n/a	n/a	1/2 CTB	Bag	Internal	Internal		n/a	yes			C5		KSC	
Crew-HDW1	Utilization	UL JSC	*1.7*	0.78		0.001	n/a	n/a	n/a	1 CTB	Bag	Internal	Internal		n/a				C5		KSC	
EPO4	Utilization	M	*1.5*	0.7		0.008	n/a	n/a	n/a	1/2 CTB	Bag	Internal	Internal		n/a				C5		KSC	

Cargo			Mass		Volume		Dimensions					Location										
Name	Major Type	Minor Type	Total Mass (no accommodations) lbs	Total Mass (no accommodations) kg	Total Volume (no accommodations) ft^3	Total Volume (no accommodations) m^3	length (external only) inches	Width (external only) inches	height (external only) inches	or Bag Size	Subcarrier/FSE	Preferred Launch Location	On-Orbit Location	ISS Transfer Restrictions	Resources Required	Environ constraints - Prelaunch, Pad, Ascent, Vehicle on-orbit,	Ascent/Return Qualification Limits	Hazard Type	Criticality Level	Response Period	Transfer Location	
ESTER	Utilization	M	1.5	0.7		0.006	n/a	n/a	n/a		Bag	Internal	Internal		n/a				C5		KSC	
ADVASC-S1	Utilization	UM SPD	1.0	0.46		0.001	n/a	n/a	n/a		Bag	Internal	Internal		n/a	yes			C5		KSC	
LKR-TOOL-2	Utilization	Utilization	0.6	0.274		0.012	n/a	n/a	n/a	1 CTB	Bag	Internal	Internal		n/a				C5		KSC	
MUFF-CRIM-M	Utilization	UM SPD	0.6	0.27		0.006	n/a	n/a	n/a		Bag	Internal	Internal		n/a				C5		KSC	
EarthKAM-HD	Utilization	M	0.5	0.22		0.002	n/a	n/a	n/a	1/2 CTB	Bag	Internal	Internal		n/a				C5		KSC	
PERS-Buckle	Utilization	Utilization	0.4	0.19		0.003	n/a	n/a	n/a		Bag	Internal	Internal		n/a				C5		KSC	
800A STORAGE BATTERY	System	Maintenance,	168.32		2.413		20.9	18.3	10.9													
Replaceable Pump Panel (СПН) КОБ2-4СПН2	System	Maintenance,	62.91		0		0	0	0													
Replaceable Pump Panel (СПН)	System	Maintenance,	62.91		0		0	0	0													
Water Distribution and Heating Unit (БРП-М)	System	Maintenance,	52.92		0		0	0	0													
Orlan telemetry unit БРТА-1М	System	Maintenance,	40.79		1.562640625		18.9	15.7	9.1													
Orlan telemetry unit БРТА-1М	System	Maintenance,	40.79		1.562640625		18.9	15.7	9.1													
Power Supply (БП-1)	System	Maintenance,	39.68		0.88765625		17.1	13.8	6.5													
Power Supply (БП-1)	System	Maintenance,	39.68		0.88765625		17.1	13.8	6.5													
Purification Column Unit (БКО)	System	Maintenance,	38.58		1.001777778		9.8	25.6	6.9													
Purification Column Unit (БКО)	System	Maintenance,	38.58		1.001777778		9.8	25.6	6.9													
Purification Column Unit (БКО)	System	Maintenance,	38.58		1.001777778		9.8	25.6	6.9													
Purification Column Unit (БКО)	System	Maintenance,	38.58		1.001777778		9.8	25.6	6.9													
Purification column unit (БКО)	System	Maintenance,	38.58		1.001777778		9.8	25.6	6.9													
Purification Column Unit (БКО)	System	Maintenance,	38.58		1.001777778		9.8	25.6	6.9													
Purification Column Unit (БКО)	System	Maintenance,	38.58		1.001777778		9.8	25.6	6.9													
Monoblock CA325	System	Maintenance,	38.58		0		0	0	0													
Nitrogen Purge Assembly БПА-1М	System	Maintenance,	33.07		0.776684028		16.5	9.8	8.3													
FILTER UNIT	System	Maintenance,	31.31		0.00																	
PTAB-1M STORAGE BATTERY CURRENT CONVERTER	System	Maintenance,	30.87		0.701		13.0	12.6	7.4													
Condensate Separation and Pumping Unit (БРПК)	System	Maintenance,	30.21		0		0	0	0													
Vacuum cleaner ПО-70	System	Maintenance,	26.46		1.198263889		17.5	11.6	10.2													
Water Conditioning Unit (БКВ)	System	Maintenance,	25.36		0		0	0	0													
CURRENT STABILIZER	System	Maintenance,	25.36		0.621		12.6	7.1	12.0													
Pretreat Container	System	Maintenance,	25.24		0		15.4	6.1	0													
Pretreat Container	System	Maintenance,	25.24		0		15.4	6.1	0													
Vozdukh fan MP5-15Г	System	Maintenance,	22.05		0.467595486		16.5	8.3	5.9													
Vozdukh fan MP5-15Г	System	Maintenance,	22.05		0.467595486		16.5	8.3	5.9													
Vozdukh fan MP5-15Г	System	Maintenance,	22.05		0.467595486		16.5	8.3	5.9													
Video Monitor МЦ-27	System	Maintenance,	19.84		0		0	0	0													
Instrument Panel No. 2	System	Maintenance,	17.64		1.420199653		29.5	17.7	4.7													
Wring Collector (COT)	System	Maintenance,	16.98		0		0	0	0													
CO2 Absorber	System	Maintenance,	16.76		0.618666667		25.6	8.7	4.8													
CO2 Absorber	System	Maintenance,	16.76		0.618666667		25.6	8.7	4.8													
CO2 Absorber	System	Maintenance,	16.76		0.618666667		25.6	8.7	4.8													
CO2 Absorber	System	Maintenance,	16.76		0.618666667		25.6	8.7	4.8													
CO2 Absorber	System	Maintenance,	16.76		0.618666667		25.6	8.7	4.8													
CO2 Absorber	System	Maintenance,	16.76		0.618666667		25.6	8.7	4.8													
CO2 Absorber	System	Maintenance,	16.76		0.618666667		25.6	8.7	4.8													
CO2 Absorber	System	Maintenance,	16.76		0.618666667		25.6	8.7	4.8													
CO2 Absorber	System	Maintenance,	16.76		0.618666667		25.6	8.7	4.8													
Pretreat and Water Dispenser (ДКиВ)	System	Maintenance,	15.88		0		0	0	0													

Cargo			Mass		Volume		Dimensions					Location										
Name	Major Type	Minor Type	Total Mass (no accommodations) lbs	Total Mass (no accommodations) kg	Total Volume (no accommodations) ft^3	Total Volume (no accommodations) m^3	length (external only) inches	Width (external only) inches	height (external only) inches	or Bag Size	Subcarrier/FSE	Preferred Launch Location	On-Orbit Location	ISS Transfer Restrictions	Resources Required	Environ constraints - Prelaunch, Pad, Ascent, Vehicle on-orbit,	Ascent/Return Qualification Limits	Hazard Type	Criticality Level	Response Period	Transfer Location	
Pretreat and Water Dispenser (ДКиВ)	System	Maintenance,	15.88		0		0	0	0													
Pretreat and Water Dispenser (ДКиВ)	System	Maintenance,	15.88		0		0	0	0													
ЗИП-4М spares kit	System	Maintenance,	15.44		2.095046296		13	23.6	11.8													
ЗИП-4М spares kit	System	Maintenance,	15.44		2.095046296		13	23.6	11.8													
CURRENT REGULATOR	System	Maintenance,	15.44		0.410		10.8	7.2	9.1													
5ПТ Container	System	Maintenance,	14.99		0		0	9.8	0													
5ПТ Container	System	Maintenance,	14.99		0		0	9.8	0													
5ПТ Container	System	Maintenance,	14.99		0		0	9.8	0													
5ПТ Container	System	Maintenance,	14.99		0		0	9.8	0													
5ПТ Container	System	Maintenance,	14.99		0		0	9.8	0													
5ПТ Container	System	Maintenance,	14.99		0		0	9.8	0													
5ПТ Container	System	Maintenance,	14.99		0		0	9.8	0													
Oxygen tank БК-3М	System	Maintenance,	14.33		0		17.7	5.1	0													
Oxygen tank БК-3М	System	Maintenance,	14.33		0		17.7	5.1	0													
Oxygen tank БК-3М	System	Maintenance,	14.33		0		17.7	5.1	0													
Oxygen tank БК-3М	System	Maintenance,	14.33		0		17.7	5.1	0													
Oxygen tank БК-3М	System	Maintenance,	14.33		0		17.7	5.1	0													
Oxygen Tank БК-3М	System	Maintenance,	14.33		0		17.7	5.1	0													
Oxygen Tank БК-3М	System	Maintenance,	14.33		0		17.7	5.1	0													
Oxygen Tank БК-3М	System	Maintenance,	14.33		0		17.7	5.1	0													
Oxygen Tank БК-3М	System	Maintenance,	14.33		0		17.7	5.1	0													
Oxygen Tank БК-3М	System	Maintenance,	14.33		0		17.7	5.1	0													
Oxygen Tank БК-3М	System	Maintenance,	14.33		0		17.7	5.1	0													
Oxygen Tank БК-3М	System	Maintenance,	14.33		0		17.7	5.1	0													
Oxygen Tank БК-3М	System	Maintenance,	14.33		0		17.7	5.1	0													
Oxygen Tank БК-3М	System	Maintenance,	14.33		0		17.7	5.1	0													
Oxygen Tank БК-3М	System	Maintenance,	14.33		0		17.7	5.1	0													
Oxygen Tank БК-3М	System	Maintenance,	14.33		0		17.7	5.1	0													
Oxygen Tank БК-3М	System	Maintenance,	14.33		0		17.7	5.1	0													
Oxygen Tank БК-3М	System	Maintenance,	14.33		0		17.7	5.1	0													
Oxygen Tank БК-3М	System	Maintenance,	14.33		0		17.7	5.1	0													
Oxygen Tank БК-3М	System	Maintenance,	14.33		0		17.7	5.1	0													
Oxygen Tank БК-3М	System	Maintenance,	14.33		0		17.7	5.1	0													
Oxygen Tank БК-3М	System	Maintenance,	14.33		0		17.7	5.1	0													
Storage Battery 825M1	System	Maintenance,	13.89		0.044388889		9.4	1.6	5.1													
Storage Battery 825M1	System	Maintenance,	13.89		0.044388889		9.4	1.6	5.1													
Storage Battery 825M1	System	Maintenance,	13.89		0.044388889		9.4	1.6	5.1													
Storage Battery 825M1	System	Maintenance,	13.89		0.044388889		9.4	1.6	5.1													
825M1 Storage Battery	System	Maintenance,	13.89		0.044388889		9.4	1.6	5.1													
825M1 Storage Battery	System	Maintenance,	13.89		0.044388889		9.4	1.6	5.1													
825M1 Storage Battery	System	Maintenance,	13.89		0.044388889		9.4	1.6	5.1													
Gas-Liquid Mixture Filter (ФГС)	System	Maintenance,	12.79		0		0	0	0													
Gas Liquid Mixture Filter (ФГС)	System	Maintenance,	12.79		0		0	0	0													
Water Container (EDV)	System	Maintenance,	12.13		1.490125		21.6	13.1	9.1													
Water Container (EDV)	System	Maintenance,	12.13		1.490125		21.6	13.1	9.1													
Water Container (EDV)	System	Maintenance,	12.13		1.490125		21.6	13.1	9.1													
Vise	System	Maintenance,	11.9		0		0	0	0													
Restraints in Cover	System	Maintenance,	11.02		0		0	0	0													
Fan	System	Maintenance,	10.36		0		0	0	0													
Fan	System	Maintenance,	10.36		0		0	0	0													

Cargo			Mass		Volume		Dimensions					Location										
Name	Major Type	Minor Type	Total Mass (no accommodations) lbs	Total Mass (no accommodations) kg	Total Volume (no accommodations) ft^3	Total Volume (no accommodations) m^3	length (external only) inches	Width (external only) inches	height (external only) inches	or Bag Size	Subcarrier/FSE	Preferred Launch Location	On-Orbit Location	ISS Transfer Restrictions	Resources Required	Environ constraints - Prelaunch, Pad, Ascent, Vehicle on-orbit,	Ascent/Return Qualification Limits	Hazard Type	Criticality Level	Response Period	Transfer Location	
БРПК separator	System	Maintenance,	10.14		0		0	0	0													
Separator for the Condensate Separation and Pumping Unit (БРПК)	System	Maintenance,	10.14		0		0	0	0													
Separator for the Condensate Separation and Pumping Unit (БРПК)	System	Maintenance,	10.14		0		0	0	0													
Separator for the Condensate Separation and Pumping Unit (БРПК)	System	Maintenance,	10.14		0		0	0	0													
Separator for the Condensate Separation and Pumping Unit (БРПК)	System	Maintenance,	10.14		0		0	0	0													
БРПК separator	System	Maintenance,	10.14		0		0	0	0													
БРПК separator	System	Maintenance,	10.14		0		0	0	0													
БРПК separator	System	Maintenance,	10.14		0		0	0	0													
Air Filter	System	Maintenance,	9.7		0		0	0	0													
Air Filter	System	Maintenance,	9.7		0		0	0	0													
Air Filter	System	Maintenance,	9.7		0		0	0	0													
Air Filter	System	Maintenance,	9.7		0		0	0	0													
Transit Receiver (БП) ША346Б	System	Maintenance,	9.26		0		0	0	0													
Transit Receiver (БП) ША346	System	Maintenance,	9.26		0		0	0	0													
Set of Replaceable Components	System	Maintenance,	8.82		0.344770833		13.4	11.4	3.9													
Set of Replaceable Components	System	Maintenance,	8.82		0.344770833		13.4	11.4	3.9													
Set of Replaceable Components	System	Maintenance,	8.82		0.344770833		13.4	11.4	3.9													
Set of Replaceable Components	System	Maintenance,	8.82		0.344770833		13.4	11.4	3.9													
Set of Replaceable Components	System	Maintenance,	8.82		0.344770833		13.4	11.4	3.9													
Set of Replaceable Components	System	Maintenance,	8.82		0.344770833		13.4	11.4	3.9													
Rodnik-2 system accessories kit	System	Maintenance,	8.82		0		0	0	0													
Panel No. 3 for Tool	System	Maintenance,	8.82		1.849565972		29.8	19.5	5.5													
Hose Harness	System	Maintenance,	8.82		0		0	0	0													
Water Container (КВ)	System	Maintenance,	8.16		0		0	0	0													
Water Conditioning Unit Purification Columns (БК БКВ)	System	Maintenance,	8.16		0		0	0	0													
Water Conditioning Unit Purification Columns (БК БКВ)	System	Maintenance,	8.16		0		0	0	0													
PUMA Portable Pancratic Sight	System	Maintenance,	8.16		0		0	0	0													
BUPT-1M CURRENT CONVERTER CONTROL UNIT	System	Maintenance,	8.16		0.236		9.1	7.1	6.3													
Spacesuit Control Unit (БУС)	System	Maintenance,	7.94		0.2219375		13.4	5.4	5.3													
СКВ-1 Fan	System	Maintenance,	7.78		0.290805556		7.6	8.7	7.6													
Fan	System	Maintenance,	7.72		0.290805556		7.6	8.7	7.6													
Fan	System	Maintenance,	7.72		0.290805556		7.6	8.7	7.6													
Fan	System	Maintenance,	7.72		0.290805556		7.6	8.7	7.6													
СКВ fan	System	Maintenance,	7.72		0		0	0	0													
СКВ Fan	System	Maintenance,	7.72		0		0	0	0													
Video Data Communication Module (ТМО-1) ФЛ-001	System	Maintenance,	7.28		0		0	0	0													
Bar	System	Maintenance,	7.06		0		0	0	0													
Condensate Container	System	Maintenance,	7.05		0		0	0	0													
Condensate Collector	System	Maintenance,	7.05		0		0	0	0													
Condensate Collector	System	Maintenance,	7.05		0		0	0	0													
Condensate Collector	System	Maintenance,	7.05		0		0	0	0													
Filter-Reactor (ФР)	System	Maintenance,	6.84		0		0	0	0													
Rodnik Pump Unit (БП)	System	Maintenance,	6.61		0.135505787		10.6	4.7	4.7													
Rodnik Pump Unit (БП)	System	Maintenance,	6.61		0.135505787		10.6	4.7	4.7													
Emergency Vacuum Valve	System	Maintenance,	6.61		0		0	0	0													
Emergency Vacuum Valve	System	Maintenance,	6.61		0		0	0	0													
Absorbing Cartridge ЛП-9	System	Maintenance,	6.39		0		13.8	4.7	0													

Cargo			Mass		Volume		Dimensions					Location										
Name	Major Type	Minor Type	Total Mass (no accommodations) lbs	Total Mass (no accommodations) kg	Total Volume (no accommodations) ft^3	Total Volume (no accommodations) m^3	length (external only) inches	Width (external only) inches	height (external only) inches	or Bag Size	Subcarrier/FSE	Preferred Launch Location	On-Orbit Location	ISS Transfer Restrictions	Resources Required	Environ constraints - Prelaunch, Pad, Ascent, Vehicle on-orbit,	Ascent/Return Qualification Limits	Hazard Type	Criticality Level	Response Period	Transfer Location	
Absorbing Cartridge ЛП-9	System	Maintenance,	6.39		0		13.8	4.7	0													
Absorbing Cartridge ЛП-9	System	Maintenance,	6.39		0		13.8	4.7	0													
Absorbing Cartridge ЛП-9	System	Maintenance,	6.39		0		13.8	4.7	0													
Absorbing Cartridge ЛП-9	System	Maintenance,	6.39		0		13.8	4.7	0													
Absorbing Cartridge ЛП-9	System	Maintenance,	6.39		0		13.8	4.7	0													
Absorbing Cartridge ЛП-9	System	Maintenance,	6.39		0		13.8	4.7	0													
Absorbing Cartridge ЛП-9	System	Maintenance,	6.39		0		13.8	4.7	0													
Absorbing Cartridge ЛП-9	System	Maintenance,	6.39		0		13.8	4.7	0													
Absorbing Cartridge ЛП-9	System	Maintenance,	6.39		0		13.8	4.7	0													
Power umbilical	System	Maintenance,	5.51		0		0	0	0													
Portable Lamp СПР-1	System	Maintenance,	5.51		0.227078704		15.4	9.1	2.8													
Portable Lamp СПР-1	System	Maintenance,	5.51		0.227078704		15.4	9.1	2.8													
Gas Mask ИПК-1	System	Maintenance,	5.51		0		0	0	0													
Gas Mask ИПК-1	System	Maintenance,	5.51		0		0	0	0													
Fan	System	Maintenance,	5.51		0.190230903		7.9	7.3	5.7													
Fan	System	Maintenance,	5.51		0.190230903		7.9	7.3	5.7													
Fan	System	Maintenance,	5.51		0.190230903		7.9	7.3	5.7													
Fan	System	Maintenance,	5.51		0.190230903		7.9	7.3	5.7													
Fan	System	Maintenance,	5.51		0.190230903		7.9	7.3	5.7													
Fan	System	Maintenance,	5.51		0.190230903		7.9	7.3	5.7													
Fan	System	Maintenance,	5.51		0.190230903		7.9	7.3	5.7													
Fan	System	Maintenance,	5.51		0.190230903		7.9	7.3	5.7													
Fan	System	Maintenance,	5.51		0.190230903		7.9	7.3	5.7													
Fan	System	Maintenance,	5.51		0.190230903		7.9	7.3	5.7													
Compressor-M	System	Maintenance,	5.51		0		0	0	0													
Collector	System	Maintenance,	5.29		0		0	0	0													
Rodnik-2 system accessories kit	System	Maintenance,	5.18		0		0	0	0													
Rodnik-2 System Accessories	System	Maintenance,	5.18		0		0	0	0													
Rodnik system accessories kit	System	Maintenance,	5.18		0		0	0	0													
Rodnik system accessories kit	System	Maintenance,	5.18		0		0	0	0													
Rodnik System Accessories Kit	System	Maintenance,	5.18		0		0	0	0													
Hose P-P	System	Maintenance,	5.18		0		0	0	0													
Absolute Pressure Gauge ВК-316М	System	Maintenance,	4.85		0		0	0	0													
ЗИП-2М Spares kit	System	Maintenance,	4.63		0.314530093		4.7	11.8	9.8													
ЗИП-2М Spares kit	System	Maintenance,	4.63		0.314530093		4.7	11.8	9.8													
ЗИП-2М Spares kit	System	Maintenance,	4.63		0.314530093		4.7	11.8	9.8													
ЗИП-2М Spares kit	System	Maintenance,	4.63		0.314530093		4.7	11.8	9.8													
Tool Kit	System	Maintenance,	4.41		0		0	0	0													
Tool Kit	System	Maintenance,	4.41		0		0	0	0													
Local Analogue Commutator TA249M	System	Maintenance,	3.97		0.08018287		6.7	9.4	2.2													
Local Analog Commutator TA249M	System	Maintenance,	3.97		0.08018287		6.7	9.4	2.2													
Fan	System	Maintenance,	3.97		0		0	0	0													
Dust Collector	System	Maintenance,	3.97		0.250340278		11.8	9.4	3.9													
Air heater	System	Maintenance,	3.97		0		0	0	0													
Urine Receptacle with Hose	System	Maintenance,	3.75		0		0	0	0													
Urine Receptacle with Hose	System	Maintenance,	3.75		0		0	0	0													
Urine Receptacle with Hose	System	Maintenance,	3.75		0		0	0	0													
Urine Receptacle with Hose	System	Maintenance,	3.75		0		0	0	0													
Urine Receptacle with Hose	System	Maintenance,	3.75		0		0	0	0													
Set of Accessories for Vacuum cleaner	System	Maintenance,	3.53		0.534681713		19.7	13.4	3.5													
Pilot's sight ВП-2 (240К)	System	Maintenance,	3.31		0		0	0	0													
Converter ГЛ5187	System	Maintenance,	3.31		0		0	0	0													
Catalytic Cartridge (ПКФ)	System	Maintenance,	3.31		0		0	0	0													

Cargo			Mass		Volume		Dimensions					Location										
Name	Major Type	Minor Type	Total Mass (no accommodations) lbs	Total Mass (no accommodations) kg	Total Volume (no accommodations) ft^3	Total Volume (no accommodations) m^3	length (external only) inches	Width (external only) inches	height (external only) inches	or Bag Size	Subcarrier/FSE	Preferred Launch Location	On-Orbit Location	ISS Transfer Restrictions	Resources Required	Environ constraints - Prelaunch, Pad, Ascent, Vehicle on-orbit,	Ascent/Return Qualification Limits	Hazard Type	Criticality Level	Response Period	Transfer Location	
Vozdukh ORU test panel (ПК СОА)	System	Maintenance,	3.2		0		0	0	0													
Torque Wrench Assembly	System	Maintenance,	2.76		0		0	0	0													
Torque Wrench Assembly	System	Maintenance,	2.76		0		0	0	0													
Pipeline	System	Maintenance,	2.65		0		0	0	0													
Pipeline	System	Maintenance,	2.65		0		0	0	0													
Pipeline	System	Maintenance,	2.65		0		0	0	0													
Pipeline	System	Maintenance,	2.65		0		0	0	0													
Pipeline	System	Maintenance,	2.65		0		0	0	0													
Pipeline	System	Maintenance,	2.65		0		0	0	0													
Pipeline	System	Maintenance,	2.65		0		0	0	0													
Pipeline	System	Maintenance,	2.65		0		0	0	0													
Cable	System	Maintenance,	2.65		0		0	0	0													
T-Joint Hose РУ1-РУ6-Р3	System	Maintenance,	2.43		0		0	0	0													
Tether with Pigtail	System	Maintenance,	2.43		0.042648148		9.4	2.8	2.8													
Tether with Pigtail	System	Maintenance,	2.43		0.042648148		9.4	2.8	2.8													
Cable	System	Maintenance,	2.43		0		0	0	0													
Cable	System	Maintenance,	2.31		0		0	0	0													
ГЛ5188 gas analyzer unit (O2 in H2 line)	System	Maintenance,	2.2		0.051497106		7.3	2.3	5.3													
Undergarment Set	System	Maintenance,	2.2		0.3644375		9.8	12.6	5.1													
Undergarment Set	System	Maintenance,	2.2		0.3644375		9.8	12.6	5.1													
Undergarment Set	System	Maintenance,	2.2		0.3644375		9.8	12.6	5.1													
Undergarment Set	System	Maintenance,	2.2		0.3644375		9.8	12.6	5.1													
Undergarment Set	System	Maintenance,	2.2		0.3644375		9.8	12.6	5.1													
Undergarment Set	System	Maintenance,	2.2		0.3644375		9.8	12.6	5.1													
Undergarment Set	System	Maintenance,	2.2		0.3644375		9.8	12.6	5.1													
Undergarment Set	System	Maintenance,	2.2		0.3644375		9.8	12.6	5.1													
Tool Cartridge Belt	System	Maintenance,	2.2		0		0	0	0													
Tool Cartridge Belt	System	Maintenance,	2.2		0		0	0	0													
Tool Cartridge Belt	System	Maintenance,	2.2		0		0	0	0													
Tool belt	System	Maintenance,	2.2		0		0	0	0													
Toilet (ACY) Inserts	System	Maintenance,	2.2		0		0	0	0													
Toilet (ACY) Inserts	System	Maintenance,	2.2		0		0	0	0													
Toilet (ACY) Inserts	System	Maintenance,	2.2		0		0	0	0													
Toilet (ACY) Inserts	System	Maintenance,	2.2		0		0	0	0													
Toilet (ACY) Inserts	System	Maintenance,	2.2		0		0	0	0													
Toilet (ACY) Inserts	System	Maintenance,	2.2		0		0	0	0													
Toilet (ACY) Inserts	System	Maintenance,	2.2		0		0	0	0													
Toilet (ACY) Inserts	System	Maintenance,	2.2		0		0	0	0													
Safety Tether	System	Maintenance,	2.2		1.85185E-05		0.8	0.2	0.2													
Safety Tether	System	Maintenance,	2.2		1.85185E-05		0.8	0.2	0.2													
Safety Tether	System	Maintenance,	2.2		1.85185E-05		0.8	0.2	0.2													
Pipeline	System	Maintenance,	2.2		0		0	0	0													
Pipeline	System	Maintenance,	2.2		0		0	0	0													
Pipe	System	Maintenance,	2.2		0		0	0	0													
Orlan Thermal Comfort Undergarment Set (БК-10)	System	Maintenance,	2.2		0.3644375		9.8	12.6	5.1													
Orlan Thermal Comfort Undergarment Set (БК-10)	System	Maintenance,	2.2		0.3644375		9.8	12.6	5.1													
Equipped cartridge belt	System	Maintenance,	2.2		0		0	0	0													
Accessory Kit for AOK	System	Maintenance,	2.2		0		0	0	0													
Input Signal Generator / Transmitter (УВФС) TA739M	System	Maintenance,	2.09		0		0	0	0													
ТП1187 unit (H2 in O2 line)	System	Maintenance,	1.98		0.040833333		5.6	2.8	4.5													

Cargo			Mass		Volume		Dimensions					Location										
Name	Major Type	Minor Type	Total Mass (no accommodations) lbs	Total Mass (no accommodations) kg	Total Volume (no accommodations) ft^3	Total Volume (no accommodations) m^3	length (external only) inches	Width (external only) inches	height (external only) inches	or Bag Size	Subcarrier/FSE	Preferred Launch Location	On-Orbit Location	ISS Transfer Restrictions	Resources Required	Environ constraints - Prelaunch, Pad, Ascent, Vehicle on-orbit,,	Ascent/Return Qualification Limits	Hazard Type	Criticality Level	Response Period	Transfer Location	
RPM Regulator (Switch) РЧП-1	System	Maintenance,	1.98		0.052592593		7.1	3.2	4													
Soft Trash Bag (КБО)	System	Maintenance,	1.87		0.3583125		3.9	12.6	12.6													
Soft Trash Bag (КБО)	System	Maintenance,	1.87		0.3583125		3.9	12.6	12.6													
Soft Trash Bag (КБО)	System	Maintenance,	1.87		0.3583125		3.9	12.6	12.6													
Soft Trash Bag (КБО)	System	Maintenance,	1.87		0.3583125		3.9	12.6	12.6													
Soft Trash Bag (КБО)	System	Maintenance,	1.87		0.3583125		3.9	12.6	12.6													
Soft Trash Bag (КБО)	System	Maintenance,	1.87		0.3583125		3.9	12.6	12.6													
Soft Trash Bag (КБО)	System	Maintenance,	1.87		0.3583125		3.9	12.6	12.6													
Soft Trash Bag (КБО)	System	Maintenance,	1.87		0.3583125		3.9	12.6	12.6													
Soft Trash Bag (КБО)	System	Maintenance,	1.87		0.3583125		3.9	12.6	12.6													
Soft Trash Bag (КБО)	System	Maintenance,	1.87		0.3583125		3.9	12.6	12.6													
Soft Trash Bag (КБО)	System	Maintenance,	1.87		0.3583125		3.9	12.6	12.6													
Soft Trash Bag (КБО)	System	Maintenance,	1.87		0.3583125		3.9	12.6	12.6													
Soft Trash Bag (КБО)	System	Maintenance,	1.87		0.3583125		3.9	12.6	12.6													
Soft Trash Bag (КБО)	System	Maintenance,	1.87		0.3583125		3.9	12.6	12.6													
Soft Trash Bag (КБО)	System	Maintenance,	1.87		0.3583125		3.9	12.6	12.6													
Soft Trash Bag (КБО)	System	Maintenance,	1.87		0.3583125		3.9	12.6	12.6													
Soft Trash Bag (КБО)	System	Maintenance,	1.87		0.3583125		3.9	12.6	12.6													
Soft Trash Bag (КБО)	System	Maintenance,	1.87		0.3583125		3.9	12.6	12.6													
Soft Trash Bag (КБО)	System	Maintenance,	1.87		0.3583125		3.9	12.6	12.6													
Soft Trash Bag (КБО)	System	Maintenance,	1.87		0.3583125		3.9	12.6	12.6													
Soft Trash Bag (КБО)	System	Maintenance,	1.87		0.3583125		3.9	12.6	12.6													
Soft Trash Bag (КБО)	System	Maintenance,	1.87		0.3583125		3.9	12.6	12.6													
Soft Trash Bag (КБО)	System	Maintenance,	1.87		0.3583125		3.9	12.6	12.6													
Soft Trash Bag (КБО)	System	Maintenance,	1.87		0.3583125		3.9	12.6	12.6													
Soft Trash Bag	System	Maintenance,	1.87		0.3583125		3.9	12.6	12.6													
Soft Trash Bag	System	Maintenance,	1.87		0.3583125		3.9	12.6	12.6													
Soft Trash Bag	System	Maintenance,	1.87		0.3583125		3.9	12.6	12.6													
Soft Trash Bag	System	Maintenance,	1.87		0.3583125		3.9	12.6	12.6													
Soft Trash Bag	System	Maintenance,	1.87		0.3583125		3.9	12.6	12.6													
Soft Trash Bag	System	Maintenance,	1.87		0.3583125		3.9	12.6	12.6													
Soft Trash Bag	System	Maintenance,	1.87		0.3583125		3.9	12.6	12.6													
Soft Trash Bag	System	Maintenance,	1.87		0.3583125		3.9	12.6	12.6													
Soft Trash Bag	System	Maintenance,	1.87		0.3583125		3.9	12.6	12.6													
Soft Trash Bag	System	Maintenance,	1.87		0.3583125		3.9	12.6	12.6													
Soft Trash Bag	System	Maintenance,	1.87		0.3583125		3.9	12.6	12.6													
Soft Trash Bag	System	Maintenance,	1.87		0.3583125		3.9	12.6	12.6													
Soft Trash Bag	System	Maintenance,	1.87		0.3583125		3.9	12.6	12.6													
Soft Trash Bag	System	Maintenance,	1.87		0.3583125		3.9	12.6	12.6													
Soft Trash Bag	System	Maintenance,	1.87		0.3583125		3.9	12.6	12.6													
Electric Motor БК-1425	System	Maintenance,	1.83		0		0	0	0													
Voltage transducer ПН No. 012	System	Maintenance,	1.76		0		0	0	0													

Cargo			Mass		Volume		Dimensions					Location										
Name	Major Type	Minor Type	Total Mass (no accommodations) lbs	Total Mass (no accommodations) kg	Total Volume (no accommodations) ft^3	Total Volume (no accommodations) m^3	length (external only) inches	Width (external only) inches	height (external only) inches	or Bag Size	Subcarrier/FSE	Preferred Launch Location	On-Orbit Location	ISS Transfer Restrictions	Resources Required	Environ constraints - Prelaunch, Pad, Ascent, Vehicle on-orbit,	Ascent/Return Qualification Limits	Hazard Type	Criticality Level	Response Period	Transfer Location	
Voltage Transducer (ПН)	System	Maintenance,	1.76		0		0	0	0													
T-Joint Hose И-У-Р3-РУ7	System	Maintenance,	1.76		0		0	0	0													
T-Joint Hose И-У-Р3-РУ7	System	Maintenance,	1.76		0		0	0	0													
Hose	System	Maintenance,	1.76		0		0	0	0													
Equipped tool cartridge belt	System	Maintenance,	1.76		0		0	0	0													
CO2 Filter Unit (БФ)	System	Maintenance,	1.76		0		0	0	0													
CO2 Filter Unit (БФ)	System	Maintenance,	1.76		0		0	0	0													
CO2 Filter Unit (БФ)	System	Maintenance,	1.76		0		0	0	0													
CO2 Filter Unit (БФ)	System	Maintenance,	1.76		0		0	0	0													
CO2 Filter Unit (БФ)	System	Maintenance,	1.76		0		0	0	0													
CO2 Filter Unit (БФ)	System	Maintenance,	1.76		0		0	0	0													
CO2 Filter Unit (БФ)	System	Maintenance,	1.76		0		0	0	0													
CO2 Filter Unit (БФ)	System	Maintenance,	1.76		0		0	0	0													
CO2 Filter Unit (БФ CO2)	System	Maintenance,	1.76		0		0	0	0													
CO2 Filter Unit (БФ CO2)	System	Maintenance,	1.76		0		0	0	0													
CO2 Filter Unit (БФ CO2)	System	Maintenance,	1.76		0		0	0	0													
CO2 Filter Unit (БФ CO2)	System	Maintenance,	1.76		0		0	0	0													
CO2 Filter Unit (БФ CO2)	System	Maintenance,	1.76		0		0	0	0													
CO2 filter unit (БФ CO2)	System	Maintenance,	1.76		0		0	0	0													
Fan	System	Maintenance,	1.65		0		0	0	0													
Fan	System	Maintenance,	1.65		0		0	0	0													
Fan	System	Maintenance,	1.65		0		0	0	0													
TA746 ОЦПЛГ-В	System	Maintenance,	1.54		0		0	0	0													
Wipes Kit	System	Maintenance,	1.54		0		0	0	0													
Wipes Kit	System	Maintenance,	1.54		0		0	0	0													
Wipes Kit	System	Maintenance,	1.54		0		0	0	0													
Wipes Kit	System	Maintenance,	1.54		0		0	0	0													
Wipes Kit	System	Maintenance,	1.54		0		0	0	0													
Secondary Power Supply for the Local Groups (ВИП ЛГ) TA818M1	System	Maintenance,	1.54		0		6.7	6.8	6.8													
Manual Pump	System	Maintenance,	1.54		0		0	0	0													
Local Group Central Instrument (ЦПЛГ) TA746	System	Maintenance,	1.54		0		0	0	0													
Local Group Central Instrument (ЦПЛГ) TA746	System	Maintenance,	1.54		0		0	0	0													
Local Group Central Instrument (ЦПЛГ) TA746	System	Maintenance,	1.54		0		0	0	0													
Hose	System	Maintenance,	1.54		0		0	0	0													
Secondary Power Source (ВИП) TA837B	System	Maintenance,	1.43		0		0	0	0													
Personal Fan BK1	System	Maintenance,	1.43		0.151		5.5	9.8	4.8													
Line Amplifier (МУ) TA750	System	Maintenance,	1.43		0		0	0	0													
Cable	System	Maintenance,	1.43		0		0	0	0													
Smoke Detector ДС-7А	System	Maintenance,	1.32		0		0	0	0													
Smoke Detector ДС-7А	System	Maintenance,	1.32		0		0	0	0													
Smoke Detector ДС-7А	System	Maintenance,	1.32		0		0	0	0													
Smoke Detector ДС-7А	System	Maintenance,	1.32		0		0	0	0													
Smoke Detector ДС-7А	System	Maintenance,	1.32		0		0	0	0													
Smoke Detector ДС-7А	System	Maintenance,	1.32		0		0	0	0													
Smoke Detector ДС-7А	System	Maintenance,	1.32		0		0	0	0													
Smoke Detector ДС-7А	System	Maintenance,	1.32		0		0	0	0													
Smoke Detector ДС-7А	System	Maintenance,	1.32		0		0	0	0													

Cargo			Mass		Volume		Dimensions					Location										
Name	Major Type	Minor Type	Total Mass (no accommodations) lbs	Total Mass (no accommodations) kg	Total Volume (no accommodations) ft^3	Total Volume (no accommodations) m^3	length (external only) inches	Width (external only) inches	height (external only) inches	or Bag Size	Subcarrier/FSE	Preferred Launch Location	On-Orbit Location	ISS Transfer Restrictions	Resources Required	Environ constraints - Prelaunch, Pad, Ascent, Vehicle on-orbit,	Ascent/Return Qualification Limits	Hazard Type	Criticality Level	Response Period	Transfer Location	
Smoke Detector ДС-7А	System	Maintenance,	1.32		0		0	0	0													
Smoke Detector ДС-7А	System	Maintenance,	1.32		0		0	0	0													
Joint Bond for Interface Extension Unit (БРИ)	System	Maintenance,	1.32		0		0	0	0													
Extension	System	Maintenance,	1.32		0		0	0	0													
CO Filter Unit	System	Maintenance,	1.32		0		0	0	0													
CO Filter Unit	System	Maintenance,	1.32		0		0	0	0													
CO Filter Unit	System	Maintenance,	1.32		0		0	0	0													
CO Filter Unit	System	Maintenance,	1.32		0		0	0	0													
CO Filter Unit	System	Maintenance,	1.32		0		0	0	0													
Cable	System	Maintenance,	1.32		0		0	0	0													
Cable	System	Maintenance,	1.32		0		0	0	0													
Hose	System	Maintenance,	1.28		0		0	0	0													
A-R Hose	System	Maintenance,	1.21		0.266		118.1	1.6	0													
Wring Collector	System	Maintenance,	1.21		0		0	0	0													
Wring Collector	System	Maintenance,	1.21		0		0	0	0													
Hose A-P	System	Maintenance,	1.21		0.266		118.1	1.6	0													
Hose A-P	System	Maintenance,	1.21		0.266		118.1	1.6	0													
Hose A-P	System	Maintenance,	1.21		0.266		118.1	1.6	0													
Hose A-P	System	Maintenance,	1.21		0.266		118.1	1.6	0													
Hose A-P	System	Maintenance,	1.21		0.266		118.1	1.6	0													
Hose A-P	System	Maintenance,	1.21		0.266		118.1	1.6	0													
Hose A-P	System	Maintenance,	1.21		0.266		118.1	1.6	0													
Hose	System	Maintenance,	1.21		0		0	0	0													
Hose	System	Maintenance,	1.21		0		0	0	0													
Flow rate transducer ПР No. 022	System	Maintenance,	1.21		0		0	0	0													
Flow Rate Transducer (ПР)	System	Maintenance,	1.21		0		0	0	0													
Ratchet Screwdriver	System	Maintenance,	1.17		0		0	0	0													
Hose	System	Maintenance,	1.15		0		0	0	0													
Tool Belt	System	Maintenance,	1.1		0		0	0	0													
Tool Belt	System	Maintenance,	1.1		0		0	0	0													
Tool Belt	System	Maintenance,	1.1		0		0	0	0													
Tool Belt	System	Maintenance,	1.1		0		0	0	0													
Tool Belt	System	Maintenance,	1.1		0		0	0	0													
Tool Belt	System	Maintenance,	1.1		0		0	0	0													
Safety Harness	System	Maintenance,	1.1		0		0	0	0													
Mating Adapter	System	Maintenance,	1.1		0.072		5.6	3.9	5.6													
Mating Adapter	System	Maintenance,	1.1		0.072		5.6	3.9	5.6													
Mating Adapter	System	Maintenance,	1.1		0.072		5.6	3.9	5.6													
Mating Adapter	System	Maintenance,	1.1		0.072		5.6	3.9	5.6													
Mating Adapter	System	Maintenance,	1.1		0.072		5.6	3.9	5.6													
Mating Adapter	System	Maintenance,	1.1		0.072		5.6	3.9	5.6													
Liquid Carryover Indicator (ИПЖ) (for БРПК separator)	System	Maintenance,	1.1		0		0	0	0													
Liquid Carryover Indicator (ИПЖ) (for БРПК separator)	System	Maintenance,	1.1		0		0	0	0													
Liquid Carryover Indicator (ИПЖ) (for БРПК separator)	System	Maintenance,	1.1		0		0	0	0													
Liquid Carryover Indicator (ИПЖ) (for БРПК separator)	System	Maintenance,	1.1		0		0	0	0													
Liquid Carryover Indicator (ИПЖ) (for БРПК separator)	System	Maintenance,	1.1		0		0	0	0													
Liquid Carryover Indicator (ИПЖ) (for БРПК separator)	System	Maintenance,	1.1		0		0	0	0													

Cargo			Mass		Volume		Dimensions					Location										
Name	Major Type	Minor Type	Total Mass (no accommodations) lbs	Total Mass (no accommodations) kg	Total Volume (no accommodations) ft^3	Total Volume (no accommodations) m^3	length (external only) inches	Width (external only) inches	height (external only) inches	or Bag Size	Subcarrier/FSE	Preferred Launch Location	On-Orbit Location	ISS Transfer Restrictions	Resources Required	Environ constraints - Prelaunch, Pad, Ascent, Vehicle on-orbit,	Ascent/Return Qualification Limits	Hazard Type	Criticality Level	Response Period	Transfer Location	
Liquid Carryover Indicator (ИПЖ) (for БРПК separator)	System	Maintenance,	1.1		0		0	0	0													
Liquid Carryover Indicator (ИПЖ) (for БРПК separator)	System	Maintenance,	1.1		0		0	0	0													
Intake Device	System	Maintenance,	1.1		0		0	0	0													
Intake Device	System	Maintenance,	1.1		0		0	0	0													
Intake Device	System	Maintenance,	1.1		0		0	0	0													
Intake Device	System	Maintenance,	1.1		0		0	0	0													
Hose	System	Maintenance,	1.1		0		0	0	0													
Hose	System	Maintenance,	1.1		0		0	0	0													
Cutter	System	Maintenance,	1.1		0		0	0	0													
Cutter	System	Maintenance,	1.1		0		0	0	0													
CO2 filter	System	Maintenance,	1.1		0		0	0	0													
Alarm СПП-1	System	Maintenance,	1.1		0		0	0	0													
Alarm СПП-1	System	Maintenance,	1.1		0		0	0	0													
Filtering Element	System	Maintenance,	1.01		0		0	0	0													
Preliminary Desiccant Assembly Switching Unit	System	Maintenance,	0.99		0		0	0	0													
Fan Speed Control Unit (БРУС)	System	Maintenance,	0.99		0		0	0	0													
Fan Speed Control Unit (БРУС)	System	Maintenance,	0.99		0		0	0	0													
Fan Speed Control Unit (БРУС)	System	Maintenance,	0.99		0		0	0	0													
Fan Speed Control Unit (БРУС)	System	Maintenance,	0.99		0		0	0	0													
Set of Handrails with fasteners	System	Maintenance,	0.88		0		0	0	0													
Local Digital Commutator (ЛКЦ) TA250	System	Maintenance,	0.88		0.029		6.7	7.1	1.1													
Fan	System	Maintenance,	0.88		0		0	0	0													
Fan	System	Maintenance,	0.88		0		0	0	0													
Cartridge belt with Draeger tube air samplers (ИПД)	System	Maintenance,	0.88		0		0	0	0													
Cartridge belt with Draeger tube air samplers (ИПД)	System	Maintenance,	0.88		0		0	0	0													
Cartridge Belt with Draeger Tube Air Samplers	System	Maintenance,	0.88		0		0	0	0													
Cartridge belt with Draeger tube air samplers	System	Maintenance,	0.88		0		0	0	0													
Cartridge Belt with Draeger Tube Air Samplers	System	Maintenance,	0.88		0		0	0	0													
Cartridge Belt with Draeger Tube Air Samplers	System	Maintenance,	0.88		0		0	0	0													
Cartridge Belt with Draeger Tube Air Samplers	System	Maintenance,	0.88		0		0	0	0													
Cable	System	Maintenance,	0.86		0		0	0	0													
Special Wrench	System	Maintenance,	0.84		0		0	0	0													
Humidity Condensate Container	System	Maintenance,	0.84		0		0	0	0													
Humidity Condensate (КАВ) Container	System	Maintenance,	0.84		0		0	0	0													
Pipe elbow	System	Maintenance,	0.77		0		0	0	0													
Cable	System	Maintenance,	0.77		0		0	0	0													
Alarm Electronics Unit СПП-1	System	Maintenance,	0.77		0		0	0	0													
Set of Hygienic Covers	System	Maintenance,	0.71		0		0	0	0													
Cable	System	Maintenance,	0.68		0		0	0	0													
АК-1М air sampling adsorber Kit	System	Maintenance,	0.66		0.026		7.1	2.6	0.6													
АК-1М air sampling adsorber Kit	System	Maintenance,	0.66		0.026		7.1	2.6	0.6													
АК-1М air sampling adsorber Kit	System	Maintenance,	0.66		0.026		7.1	2.6	0.6													
Waste Bags	System	Maintenance,	0.66		0		0	0	0													
Vacuum Pump Bracket	System	Maintenance,	0.66		0		0	0	0													
Switching Controller АП6	System	Maintenance,	0.66		0		0	0	0													

Cargo			Mass		Volume		Dimensions					Location										
Name	Major Type	Minor Type	Total Mass (no accommodations) lbs	Total Mass (no accommodations) kg	Total Volume (no accommodations) ft^3	Total Volume (no accommodations) m^3	length (external only) inches	Width (external only) inches	height (external only) inches	or Bag Size	Subcarrier/FSE	Preferred Launch Location	On-Orbit Location	ISS Transfer Restrictions	Resources Required	Environ constraints - Prelaunch, Pad, Ascent, Vehicle on-orbit,	Ascent/Return Qualification Limits	Hazard Type	Criticality Level	Response Period	Transfer Location	
Set of Replaceable Rings	System	Maintenance,	0.66		0		0	0	0													
Set of Replaceable Rings	System	Maintenance,	0.66		0		0	0	0													
Set of Replaceable Rings	System	Maintenance,	0.66		0		0	0	0													
Set of Replaceable Rings	System	Maintenance,	0.66		0		0	0	0													
Set of Replaceable Rings	System	Maintenance,	0.66		0		0	0	0													
Set of Replaceable Rings	System	Maintenance,	0.66		0		0	0	0													
Safety assembly	System	Maintenance,	0.66		0		0	0	0													
HDD for Wiener Power Computer (IBM Travelstar)	System	Maintenance,	0.66		0		0	0	0													
Electric Heater	System	Maintenance,	0.66		0		0	0	0													
Electric Heater	System	Maintenance,	0.66		0		0	0	0													
Electric Heater	System	Maintenance,	0.66		0		0	0	0													
Electric Heater	System	Maintenance,	0.66		0		0	0	0													
Cable Ш1-X193/10	System	Maintenance,	0.66		0		0	0	0													
Cable Ш1-X193/10	System	Maintenance,	0.66		0		0	0	0													
AK-1M air sampling adsorber Kit	System	Maintenance,	0.66		0.026		7.1	2.6	0.6													
AK-1M air sampling adsorber Kit	System	Maintenance,	0.66		0.026		7.1	2.6	0.6													
EDV Adapter	System	Maintenance,	0.62		0.006		5.5	1.6	0													
EDV Adapter	System	Maintenance,	0.62		0.006		5.5	1.6	0													
EDV Adapter	System	Maintenance,	0.62		0.006		5.5	1.6	0													
EDV Adapter	System	Maintenance,	0.62		0.006		5.5	1.6	0													
EDV Adapter	System	Maintenance,	0.62		0.006		5.5	1.6	0													
EDV Adapter	System	Maintenance,	0.62		0.006		5.5	1.6	0													
EDV Adapter	System	Maintenance,	0.62		0.006		5.5	1.6	0													
EDV Adapter	System	Maintenance,	0.62		0.006		5.5	1.6	0													
EDV Adapter	System	Maintenance,	0.62		0.006		5.5	1.6	0													
EDV Adapter	System	Maintenance,	0.62		0.006		5.5	1.6	0													
EDV Adapter	System	Maintenance,	0.62		0.006		5.5	1.6	0													
Cable	System	Maintenance,	0.62		0		0	0	0													
Bungee restraint	System	Maintenance,	0.62		0		0	0	0													
Bungee restraint	System	Maintenance,	0.62		0		0	0	0													
Bungee restraint	System	Maintenance,	0.62		0		0	0	0													
Bungee restraint	System	Maintenance,	0.62		0		0	0	0													
Bungee restraint	System	Maintenance,	0.62		0		0	0	0													
T-Joint	System	Maintenance,	0.55		0		0	0	0													
Cable	System	Maintenance,	0.55		0		0	0	0													
Cable	System	Maintenance,	0.55		0		0	0	0													
Filter-Insert	System	Maintenance,	0.53		0		0	0	0													
Filter-Insert	System	Maintenance,	0.53		0		0	0	0													
Filter-Insert	System	Maintenance,	0.53		0		0	0	0													
Filter-Insert	System	Maintenance,	0.53		0		0	0	0													
Filter-Insert	System	Maintenance,	0.53		0		0	0	0													
Filter-Insert	System	Maintenance,	0.53		0		0	0	0													
Filter-Insert	System	Maintenance,	0.53		0		0	0	0													
Filter-Insert	System	Maintenance,	0.53		0		0	0	0													
Filter-Insert	System	Maintenance,	0.53		0		0	0	0													
Filter Insert	System	Maintenance,	0.53		0		0	0	0													
Filter Insert	System	Maintenance,	0.53		0		0	0	0													
Pressurization Adapter	System	Maintenance,	0.49		0		0	0	0													
Pressurization Adapter	System	Maintenance,	0.49		0		0	0	0													
Pressurization Adapter	System	Maintenance,	0.49		0		0	0	0													
Pressurization Adapter	System	Maintenance,	0.49		0		0	0	0													
Pressurization Adapter	System	Maintenance,	0.49		0		0	0	0													
Pressurization Adapter	System	Maintenance,	0.49		0		0	0	0													

Cargo			Mass		Volume		Dimensions					Location										
Name	Major Type	Minor Type	Total Mass (no accommodations) lbs	Total Mass (no accommodations) kg	Total Volume (no accommodations) ft^3	Total Volume (no accommodations) m^3	length (external only) inches	Width (external only) inches	height (external only) inches	or Bag Size	Subcarrier/FSE	Preferred Launch Location	On-Orbit Location	ISS Transfer Restrictions	Resources Required	Environ constraints - Prelaunch, Pad, Ascent, Vehicle on-orbit,	Ascent/Return Qualification Limits	Hazard Type	Criticality Level	Response Period	Transfer Location	
Cable	System	Maintenance,	0.49		0		0	0	0													
Dust Collector Replaceable Filter	System	Maintenance,	0.44		1.086		20.7	3.7	2.5													
Dust Collector Replaceable Filter	System	Maintenance,	0.44		1.086		20.7	3.7	2.5													
Dust Collector Replaceable Filter	System	Maintenance,	0.44		1.086		20.7	3.7	2.5													
Dust Collector Replaceable Filter	System	Maintenance,	0.44		1.086		20.7	3.7	2.5													
Dust Collector Replaceable Filter	System	Maintenance,	0.44		1.086		20.7	3.7	2.5													
Dust Collector Replaceable Filter	System	Maintenance,	0.44		1.086		20.7	3.7	2.5													
Dust Collector Replaceable Filter	System	Maintenance,	0.44		1.086		20.7	3.7	2.5													
Dust Collector Replaceable Filter	System	Maintenance,	0.44		1.086		20.7	3.7	2.5													
Dust Collector Replaceable Filter	System	Maintenance,	0.44		1.086		20.7	3.7	2.5													
Dust Collector Replaceable Filter	System	Maintenance,	0.44		1.086		20.7	3.7	2.5													
Dust Collector Replaceable Filter	System	Maintenance,	0.44		1.086		20.7	3.7	2.5													
Dust Collector Replaceable Filter	System	Maintenance,	0.44		1.086		20.7	3.7	2.5													
Dust Collector Replaceable Filter	System	Maintenance,	0.44		1.086		20.7	3.7	2.5													
Dust Collector Replaceable Filter	System	Maintenance,	0.44		1.086		20.7	3.7	2.5													
Dust Collector Replaceable Filter	System	Maintenance,	0.44		1.086		20.7	3.7	2.5													
Dust Collector Replaceable Filter	System	Maintenance,	0.44		1.086		20.7	3.7	2.5													
Dust Collector Replaceable Filter	System	Maintenance,	0.44		1.086		20.7	3.7	2.5													
Dust Collector Replaceable Filter	System	Maintenance,	0.44		1.086		20.7	3.7	2.5													
Dust Collector Replaceable Filter	System	Maintenance,	0.44		1.086		20.7	3.7	2.5													
Dust Collector Replaceable Filter	System	Maintenance,	0.44		1.086		20.7	3.7	2.5													
Dust Collector Replaceable Filter	System	Maintenance,	0.44		1.086		20.7	3.7	2.5													
Cable	System	Maintenance,	0.44		0		0	0	0													
Cable	System	Maintenance,	0.44		0		0	0	0													
Cable	System	Maintenance,	0.44		0		0	0	0													
Set for Opening Progress/FGB Hatches	System	Maintenance,	0.42		0		0	0	0													
Cable	System	Maintenance,	0.42		0		0	0	0													
Auxiliary Analog Commutator (ДКА) TA252	System	Maintenance,	0.42		0.012		6.7	3.2	1													
Cable	System	Maintenance,	0.35		0		0	0	0													
T-Joint	System	Maintenance,	0.33		0		0	0	0													
T-Joint	System	Maintenance,	0.33		0		0	0	0													
Light Filter Cartridge	System	Maintenance,	0.33		0		0	0	0													
Light bulb socket	System	Maintenance,	0.33		0		0	0	0													
Cable	System	Maintenance,	0.33		0		0	0	0													
Adapter	System	Maintenance,	0.33		0		0	0	0													
Funnel	System	Maintenance,	0.31		0		0	0	0													
Cable	System	Maintenance,	0.31		0		0	0	0													
Tool Kit with Sockets	System	Maintenance,	0.29		0		0	0	0													
Cable	System	Maintenance,	0.29		0		0	0	0													
Cable	System	Maintenance,	0.26		0		0	0	0													
Cable	System	Maintenance,	0.26		0		0	0	0													
Cable	System	Maintenance,	0.26		0		0	0	0													
Cable	System	Maintenance,	0.26		0		0	0	0													
Cable	System	Maintenance,	0.26		0		0	0	0													
Cable	System	Maintenance,	0.26		0		0	0	0													
Cable	System	Maintenance,	0.26		0		0	0	0													
Adapter	System	Maintenance,	0.26		0		0	0	0													

Cargo			Mass		Volume		Dimensions					Location										
Name	Major Type	Minor Type	Total Mass (no accommodations) lbs	Total Mass (no accommodations) kg	Total Volume (no accommodations) ft^3	Total Volume (no accommodations) m^3	length (external only) inches	Width (external only) inches	height (external only) inches	or Bag Size	Subcarrier/FSE	Preferred Launch Location	On-Orbit Location	ISS Transfer Restrictions	Resources Required	Environ constraints - Prelaunch, Pad, Ascent, Vehicle on-orbit,	Ascent/Return Qualification Limits	Hazard Type	Criticality Level	Response Period	Transfer Location	
Adapter	System	Maintenance,	0.26		0		0	0	0													
Adapter	System	Maintenance,	0.26		0		0	0	0													
Adapter	System	Maintenance,	0.26		0		0	0	0													
Adapter	System	Maintenance,	0.26		0		0	0	0													
Adapter	System	Maintenance,	0.26		0		0	0	0													
Adapter	System	Maintenance,	0.26		0		0	0	0													
Adapter	System	Maintenance,	0.26		0		0	0	0													
Adapter	System	Maintenance,	0.26		0		0	0	0													
Adapter	System	Maintenance,	0.26		0		0	0	0													
Adapter	System	Maintenance,	0.26		0		0	0	0													
Flash Card in Package	System	Maintenance,	0.22		0		0	0	0													
Flash Card in Package	System	Maintenance,	0.22		0		0	0	0													
Flash Card Case	System	Maintenance,	0.22		0		0	0	0													
Elbow adapter for vacuum pump	System	Maintenance,	0.22		0		0	0	0													
Elbow adapter for vacuum pump	System	Maintenance,	0.22		0		0	0	0													
Cable	System	Maintenance,	0.22		0		0	0	0													
Cable	System	Maintenance,	0.22		0		0	0	0													
Cable	System	Maintenance,	0.22		0		0	0	0													
Special Wrench	System	Maintenance,	0.2		0		0	0	0													
PROM for Local Temperature Commutator (ПЗУ for ЛКТ) TA765Б	System	Maintenance,	0.15		0.004		1	2	3.3													
Adapter	System	Maintenance,	0.15		0		0	0	0													
Adapter	System	Maintenance,	0.15		0		0	0	0													
Plug	System	Maintenance,	0.11		0		0	0	0													
Plug	System	Maintenance,	0.11		0		0	0	0													
Plug	System	Maintenance,	0.11		0		0	0	0													
Plug	System	Maintenance,	0.11		0		0	0	0													
Plug	System	Maintenance,	0.11		0		0	0	0													
Plug	System	Maintenance,	0.11		0		0	0	0													
Plug	System	Maintenance,	0.11		0		0	0	0													
Plug	System	Maintenance,	0.11		0		0	0	0													
Humidity Sensor	System	Maintenance,	0.11		0		0	0	0													
Waste Bags	System	Maintenance,	0.09		0		0	0	0													
Waste Bags	System	Maintenance,	0.09		0		0	0	0													
Waste Bags	System	Maintenance,	0.09		0		0	0	0													
Waste Bags	System	Maintenance,	0.09		0		0	0	0													
Waste Bags	System	Maintenance,	0.09		0		0	0	0													
Waste Bags	System	Maintenance,	0.09		0		0	0	0													
Waste Bags	System	Maintenance,	0.09		0		0	0	0													
Waste Bags	System	Maintenance,	0.09		0		0	0	0													
Waste Bags	System	Maintenance,	0.09		0		0	0	0													
Waste Bags	System	Maintenance,	0.09		0		0	0	0													
Waste Bags	System	Maintenance,	0.09		0		0	0	0													
Waste Bags	System	Maintenance,	0.09		0		0	0	0													
Waste Bags	System	Maintenance,	0.09		0		0	0	0													
Waste Bags	System	Maintenance,	0.09		0		0	0	0													
Waste Bags	System	Maintenance,	0.09		0		0	0	0													
Waste Bags	System	Maintenance,	0.09		0		0	0	0													
Waste Bags	System	Maintenance,	0.09		0		0	0	0													
Waste Bags	System	Maintenance,	0.09		0		0	0	0													
Waste Bags	System	Maintenance,	0.09		0		0	0	0													
Waste Bags	System	Maintenance,	0.09		0		0	0	0													

Cargo			Mass		Volume		Dimensions					Location										
Name	Major Type	Minor Type	Total Mass (no accommodations) lbs	Total Mass (no accommodations) kg	Total Volume (no accommodations) ft^3	Total Volume (no accommodations) m^3	length (external only) inches	Width (external only) inches	height (external only) inches	or Bag Size	Subcarrier/FSE	Preferred Launch Location	On-Orbit Location	ISS Transfer Restrictions	Resources Required	Environ constraints - Prelaunch, Pad, Ascent, Vehicle on-orbit,	Ascent/Return Qualification Limits	Hazard Type	Criticality Level	Response Period	Transfer Location	
Waste Bags	System	Maintenance,	0.09		0		0	0	0													
Waste Bags	System	Maintenance,	0.09		0		0	0	0													
Waste Bags	System	Maintenance,	0.09		0		0	0	0													
Waste Bags	System	Maintenance,	0.09		0		0	0	0													
Waste Bags	System	Maintenance,	0.09		0		0	0	0													
Waste Bags	System	Maintenance,	0.09		0		0	0	0													
Waste Bags	System	Maintenance,	0.09		0		0	0	0													
Waste Bags	System	Maintenance,	0.09		0		0	0	0													
Waste Bags	System	Maintenance,	0.09		0		0	0	0													
Waste Bags	System	Maintenance,	0.09		0		0	0	0													
Personal Mouthpiece	System	Maintenance,	0.07		0		0	0	0													
Personal Mouthpiece	System	Maintenance,	0.07		0		0	0	0													
Personal Mouthpiece	System	Maintenance,	0.07		0		0	0	0													
Crumb Bags	System	Maintenance,	0.07		0		0	0	0													
Crumb Bags	System	Maintenance,	0.07		0		0	0	0													
Bags for Crumbs	System	Maintenance,	0.07		0		0	0	0													
Thermal Sensor TM168-04	System	Maintenance,	0.04		0		0	0	0													
Thermal Sensor TM168-04	System	Maintenance,	0.04		0		0	0	0													
EVD Fill Indicator	System	Maintenance,	0.02		0		1.9	0.7	0													
EVD Fill Indicator	System	Maintenance,	0.02		0		1.9	0.7	0													
EDV Fill Indicator	System	Maintenance,	0.02		0		1.9	0.7	0													
EDV Fill Indicator	System	Maintenance,	0.02		0		1.9	0.7	0													
EDV FILL INDICATOR	System	Maintenance,	0.02		0		1.9	0.7	0													
EDV Fill Indicator	System	Maintenance,	0.02		0		1.9	0.7	0													
EDV Fill Indicator	System	Maintenance,	0.02		0		1.9	0.7	0													
EDV Fill Indicator	System	Maintenance,	0.02		0		1.9	0.7	0													
EDV Fill Indicator	System	Maintenance,	0.02		0		1.9	0.7	0													
EDV Fill Indicator	System	Maintenance,	0.02		0		1.9	0.7	0													
EDV Fill Indicator	System	Maintenance,	0.02		0		1.9	0.7	0													
Bungees	System	Maintenance,	0.02		0		0	0	0													
Bungees	System	Maintenance,	0.02		0		0	0	0													
Bungees	System	Maintenance,	0.02		0		0	0	0													
Wrench	System	Maintenance,	0		0.014		9.4	1.6	1.6													
Wrench	System	Maintenance,	0		0.014		9.4	1.6	1.6													
Universal joint	System	Maintenance,	0		0		0	0	0													
Tool and Accessory Kit	System	Maintenance,	0		0		0	0	0													
Socket (S=9)	System	Maintenance,	0		0		0	0	0													
Socket (S=8)	System	Maintenance,	0		0		0	0	0													
Socket (S=24)	System	Maintenance,	0		0.002		6.5	0.9	0													
Socket (S=22)	System	Maintenance,	0		0		0	0	0													
Socket (S=19)	System	Maintenance,	0		0		0	0	0													
Socket (S=10)	System	Maintenance,	0		0		0	0	0													
Socket (S=17)	System	Maintenance,	0		0		0	0	0													
Socket (S=14)	System	Maintenance,	0		0		0	0	0													
Socket (S=13)	System	Maintenance,	0		0		0	0	0													
Socket (S=11)	System	Maintenance,	0		0		0	0	0													
Ratchet Wrench	System	Maintenance,	0		0.014		9.4	1.6	1.6													
Extension	System	Maintenance,	0		0		0	0	0													
Extension	System	Maintenance,	0		0		0	0	0													
Extension	System	Maintenance,	0		0.002		6.5	0.9	0													
Extension	System	Maintenance,	0		0.002		6.5	0.9	0													
Container	System	Maintenance,	0		0		0	0	0													
75 mm Extension	System	Maintenance,	0		0		0	0	0													
150 mm Extension	System	Maintenance,	0		0		0	0	0													

APPENDIX H
TRAFFIC MODEL RESULTS

Alternate Access to Station

Traffic Model Study

February 12, 2002

This traffic model report has been edited by USA to allow it to fit within the format of this Final Report.

BOOZ | Allen | Hamilton

Alternate Access To Station

Traffic Model Analysis

12 February 2002

PREPARED BY:

Matthew Schuetz	Booz Allen Hamilton
PRINT NAME	ORGANIZATION
SIGNATURE	
David Lodge	Booz Allen Hamilton
PRINT NAME	ORGANIZATION
SIGNATURE	
Gary Brown	Booz Allen Hamilton
PRINT NAME	ORGANIZATION
SIGNATURE	

TABLE OF CONTENTS

PARAGRAPH

PARAGRAPH IV
APPENDIX .....
FIGURES VI
TABLES VI
1.0 INTRODUCTION 1-1
1.1 PURPOSE 1-1
1.2 SCOPE 1-1
2.0 REFERENCES 2-1
2.1 APPLICABLE DOCUMENTS 2-1
2.2 REFERENCES 2-1
3.0 METHODOLOGY 3-1
3.1 STUDY BASELINE 3-1
3.2 AAS LOGISTICS RESUPPLY/RETURN SCENARIOS 3-1
3.2.1 ISS CREW SIZE 3-2
3.2.2 ISS CONSTRAINTS 3-2
3.2.3 ANALYSIS PROCEDURE 3-3
3.3 LIMITATIONS OF THE ANALYSIS 3-3
3.3.1 UNCERTAINTY IN ISS RESUPPLY/RETURN REQUIREMENTS 3-3
3.3.2 TM TOOL LIMITATIONS 3-4
3.3.3 VEHICLE EFFECTIVENESS 3-4
3.3.4 CARGO ACCOMMODATIONS AND CARRIERS 3-4
3.3.5 ISS REBOOST PROPELLANT 3-4
4.0 DATA SOURCES 4-1
5.0 ASSUMPTIONS 5-1
5.1 GENERAL ASSUMPTIONS 5-1
5.2 RESUPPLY REQUIREMENTS 5-1
5.3 CARGO RETURN ASSUMPTIONS 5-3
5.4 TRANSPORTATION VEHICLES 5-4
5.4.1 SHUTTLE 5-4
5.4.2 RUSSIAN SPACE AGENCY (RSA) VEHICLES 5-5
5.4.3 ATV 5-6

5.4.4 HTV 5-6
6.0 TRAFFIC MODEL ANALYSIS/RESULTS 6-1
6.1 MINIMUM CARGO AAS CASE (TM 2) 6-1
6.2 MAXIMUM CARGO AAS CASE (TM 3) 6-3
6.3 NOMINAL CASES 6-5
6.3.1 NOMINAL CASE WITH MIXED CARGO AAS VEHICLE (TM 4) 6-7
6.3.2 NOMINAL CASE WITH AN ALL PRESSURIZED CARGO AAS VEHICLE (TM 5) 6-8
6.3.3 NOMINAL CASE WITH AN ALL UNPRESSURIZED AAS VEHICLE (TM 6) 6-9
6.3.4 NOMINAL CASE WITH DECREASED PROGRESS FLIGHTS (TM 7) 6-11
6.3.5 NOMINAL CASE WITH INCREASED UTILIZATION (TM 8) 6-13
7.0 SUMMARY 7-1
8.0 ACRONYMs 8-1

FIGURES

Figure 4-1 List of Parameters used for Traffic Models 4-1
Figure 5-1 Annual Utilization Requirements for AAS TMs 1-7 and DAC 8 TM 5-2
Figure 5-2 ISS Resupply Requirements for AAS TMs 1-7 5-3
Figure 5-3 Cargo Return Assumption 5-4
Figure 6-1 Summary of Cargo Loading for the Minimum Cargo AAS Case 6-2
Figure 6-2 Summary of AAS Loading for the Minimum Cargo AAS Case 6-3
Figure 6-3 Average Cargo Loads for the Maximum Cargo AAS Case 6-4
Figure 6-4 Summary of AAS Loading for the Maximum Cargo AAS Case 6-5
Figure 6-5 Average Cargo Loads for the Nominal Mixed AAS Case 6-7
Figure 6-6 Average Cargo Loads for the Nominal Pressurized AAS Case 6-8
Figure 6-7 Summary of AAS Cargo Loads for the all Pressurized Case 6-9
Figure 6-8 Average Cargo Loads for the Nominal Unpressurized AAS Case 6-10
Figure 6-9 AAS Cargo Loads for the Nominal Unpressurized Cargo Case 6-10
Figure 6-10 Return Cargo Backlog for Decreased Progress Case 6-12
Figure 6-11 Summary of AAS Loading for the Decreased Progress Flights Case 6-12
Figure 6-12 Average Loads for the Increased Utilization Case 6-14
Figure 6-13 Comparison of End-of-Model Delivery Backlog 6-15
Figure 6-14 Cargo Delivery Backlog for the Nominal Case with Unpressurized AAS 6-17
Figure 6-15 Comparison of Return Cargo Backlog between Cases 6-17

TABLES

Table 3-1 AAS Scenarios 3-2
Table 5-1 Utilization Cargo Requirements without Accommodations 5-1
Table 5-2 Shuttle Capabilities to 407 km at 51.6° Inclination 5-5
Table 5-3 Shuttle Carriers 5-5
Table 5-4 Russian Cargo Vehicle Performance to 133 km at 51.6° Inclination 5-6
Table 5-5 ATV Performance to 175 km at 51.6° Inclination 5-6
Table 6-1 Summary of Minimum Cargo Case Characteristics 6-1
Table 6-2 Minimum Cargo Case AAS Vehicle Definition 6-2
Table 6-3 Summary of AAS Loading for the Minimum Cargo AAS Case 6-2
Table 6-4 Summary of Maximum Cargo AAS Case Characteristics 6-4
Table 6-5 Maximum Case AAS Vehicle Definition 6-4
Table 6-6 Summary of AAS Loading for the Maximum Cargo AAS Case 6-5
Table 6-7 Summary of Nominal Cases Characteristics 6-6
Table 6-8 Nominal Cases AAS Vehicle Definition 6-6
Table 6-9 AAS Loading Summary for the Increased Utilization Case 6-14

1.0 INTRODUCTION

1.1 Purpose

This document describes International Space Station (ISS) Traffic Model (TM) analyses performed to determine the effectiveness of various vehicle concepts in augmenting the existing fleet of ISS logistics resupply and return vehicles. The results of the TM analyses are intended to provide insight into the required vehicle performance characteristics for an Alternate Access To Station (AAS) vehicle. These results were utilized in the development of AAS Design Reference Missions (DRM), which are documented in the Performance Requirements Specification for the Alternate Access to Station (AAS) Vehicle Document (USA-004882).

1.2 Scope

The AAS Traffic Model Report covers multiple scenarios of vehicle traffic to the ISS. The ISS Program Office Design Analysis Cycle (DAC) 8 Traffic Model and the ISS Interim Assembly Sequence, Rev F, November 19, 2001 (CR 6192) were used as initialization data for this study. Baseline cases were established for various resupply/return scenarios and alternate scenarios were examined to compare the effects of changing logistics requirements and the ISS Program logistics vehicle fleet.

2.0 REFERENCES

2.1 Applicable Documents

The document listed in this paragraph is applicable to the extent specified herein. If there is a conflict between this document and the Performance Requirements Specification for the AAS Vehicle Document, the Performance Requirements Specification for the AAS Vehicle Document takes precedence.

USA-004882	Performance Requirements Specification for the Alternate Access to Station (AAS) Vehicle Document

2.2 References

The following documents contain information to assist the user in the application of this document. These reference documents may or may not be specifically cited within the text of the document.

FINAL-D8.1.1-04	Final – ISS Integrated traffic Model Report (DAC 8), June 2, 2000, Boeing.
ISS CR6192	Assembly Sequence Revision F, November 19, 2001.
BAH-AAS-01	Detailed Traffic Model Reports For AAS Minimum Cargo Case
BAH-AAS-02	Detailed Traffic Model Reports For AAS Maximum Cargo Case
BAH-AAS-03	Detailed Traffic Model Reports For Nominal AAS Mixed Cargo Case
BAH-AAS-04	Detailed Traffic Model Reports For Nominal AAS Pressurized Cargo Case
BAH-AAS-05	Detailed Traffic Model Reports For Nominal AAS Unpressurized Cargo Case
BAH-AAS-06	Detailed Traffic Model Reports For Nominal AAS Mixed Cargo Case With A Reduced Number Of Progress Flights
BAH-AAS-07	Detailed Traffic Model Reports For Nominal AAS Cargo Case With A 30% Increase In Utilization Requirements

3.0 METHODOLOGY

3.1 Study Baseline

To determine the desired performance characteristics of an AAS vehicle, multiple scenarios were considered for which various assumptions were made regarding the availability and flight rate of the existing ISS resupply vehicles. The existing vehicles include the Space Shuttle, the Russian Progress vehicle, the Japanese H-IIa Transfer Vehicle (HTV), and the European Space Agency (ESA) Automated Transfer Vehicle (ATV). A brief description of the capability and nominal flight rates for these vehicles is included in section 5.4.

The DAC 8 Traffic Model is based on the ISS Assembly Sequence Revision E, June 16, 1999, and flight rates of 5 Shuttles per year, 4 Progress M1s per year, 2 HTVs per year, and 1 ATV per year during the post assembly phase of the ISS program.

The initial baseline TM for this study was created by updating the DAC 8 TM to the ISS Interim Assembly Sequence, Revision F, Release 3, removing assembly flight 10A.1 (the US Propulsion Module) and reducing the post assembly shuttle flight rate to 4 flights per year.

For both the DAC 8 TM and all the AAS TMs, it is assumed that one additional shuttle flight occurs every 3 years to deliver a Crew Return Vehicle (CRV) to ISS.

3.2 AAS Logistics Resupply/Return Scenarios

To assess the AAS performance requirements, seven additional TM analyses were performed. Different existing vehicle flight rates were assumed for some of the TMs to assess the sensitivity of the AAS vehicle performance requirements to the availability of the existing resupply fleet. For one of the TMs, the United States On-Orbit Segment (USOS), National Space Development Agency of Japan (NASDA), Canadian Space Agency (CSA) and ESA requirements were increased by 30% to assess the sensitivity of the AAS vehicle performance requirements to an increase in the resupply/return requirements. It was estimated by the National Aeronautics and Space Administration (NASA) Payload Office that a 30% increase in utilization logistics delivered would eliminate the delivery capability as the limiting resource for ISS utilization. In some scenarios, the AAS vehicle has the capability to carry both internal and external cargo. The sensitivity of the AAS vehicle capability was assessed by creating a model such that the AAS vehicle delivers all internal (pressurized) cargo and another model where the AAS vehicle delivers all external (unpressurized) cargo.

The eight scenarios studied are depicted in Table 3-1.

Table 3-1 - AAS Scenarios

TM #	Description	Flight Rates (per year)						
		Shuttle Mixed	Shuttle Press	Shuttle Unpress	AAS	HTV	ATV	Progress
TM 1	AAS Study Baseline Derived from DAC 8 TM	3	-	1	-	2	1	4
TM 2	Minimum Cargo AAS Case	4	-	-	2	2	1	4
TM 3	Maximum Cargo AAS Case	3	-	1	5	-	-	4
TM 4	Nominal Mixed Cargo AAS Case	4 *	-	-	5	2 *	1 *	4
TM 5	Nominal Case Internal Cargo AAS Case	3 *	-	1 *	5	2 *	1 *	4
TM 6	Nominal External Cargo AAS Case	-	4 *	-	3	2 *	1 *	4
TM 7	Nominal Decreased Progress Case	4 *	-	-	5	2 *	1 *	3 **
TM 8	Nominal Increased Utilization Case	4 *	-	-	5	2 *	1 *	4

* - These flight rates do not account for the assumed falures and skipped flights. For the Nominal Cases approximately 10% of the HTV and ATV flights are scrubbed and 1 shuttle flight every 3 years is removed

** - There are 4 Progress flights in 2012

3.2.1 ISS Crew Size

The ISS design, as represented by the ISS Assembly Sequence, Revision F, is capable of supporting a crew of seven with the assembly complete configuration. At the time of this analysis, the ISS Program Office is evaluating options to reduce the scope of the ISS and to maintain a crew size of three. In this study, scenarios with a crew size of three were considered for analysis. However, based on a previous analysis by the ISS Program Office, it was determined that a three-crew configuration could be adequately supported with the existing fleet of ISS logistics vehicles. Therefore, the three-crew scenario was not analyzed.

3.2.2 ISS Constraints

The ISS places many constraints on the resupply traffic to and from the station. The available propellant on board the station must be greater than thepropellant reserve requirement plus the propellant required for nominal ISS operations prior to the next planned propellant resupply. The microgravity quiescent period requirement is to provide at least 180 days of quiescence per year in increments of atleast 30 days. Quiescence is defined as a period in which there are no disturbing events, such as a dock, undock, or reboost on the station. In addition to the propellant and quiescent period constraint, there are a limited number of ports where vehicles can be attached to the station. There must be an available port for a specific vehicle in order for it to visit and dock to the station.

The micro gravity quiescent periods are illustrated in the Quiet Periods Chart and a time history of the propellant reserve requirement is shown in the Appendices for each case assessed. The majority of the traffic models in this analysis do not meet the micro gravity and propellant reserve constraints. However, based on past experience, it is believed that adjustments to the flight dates could be made to satisfy the constraints of the station.

3.2.3 Analysis Procedure

For each scenario analyzed, the first step was to create a TM with the flights rates shown in Table 3.1 but with no AAS flights. The resulting delivery requirements backlog was analyzed and an annual average backlog was determined. Based on the annual average backlog and the available flight opportunities, an approximate delivery capability and flight rate was chosen for an AAS vehicle which would effectively eliminate the backlog while retaining the potential to meet the ISS microgravity quiescent period requirement. The TMs produced were not altered to prove this requirement was met but iterations were performed until the analysts were convinced that the requirement could be met with the modeled flight rates by adjusting one or more flights in the schedule.

Once the AAS performance requirements and flight rate were determined for a given scenario, an AAS vehicle was modeled and the TM was executed todetermine the average delivery and return loads for the AAS and to confirm that the ISS delivery backlog was eliminated.

3.3 Limitations of the Analysis

3.3.1 Uncertainty in ISS Resupply/Return Requirements

The ISS TM analyses conducted for this assessment were based on the best available data for the resupply/return requirements. It is known that some of these requirements have a low level of fidelity and maturity whereas others have been substantiated or updated by the early flight experience of the ISS. For example, empirical data exist for the crew consumables because the ISS has been permanently manned since November 2000. However, most Orbital Replacement Units (ORUs) have not been on-orbit long enough to allow a comparison of the actual versus the predicted Mean Time Between Failures (MTBFs). As requirements mature, the AAS requirements to eliminate the backlog will change.

3.3.2 TM Tool Limitations

The TM tool does not generate an optimal solution. There are many variables in the traffic model and there are an infinite number of models for each scenario analyzed. To produce an ISS traffic model that approaches an optimal solution, several iterations must be performed by an analyst with significant knowledge of the tool and the input data. Time constraints prevented numerous iterations of the traffic models for the cases presented in this report.

Another important aspect of the model is that the return cargo is limited to the accommodation units that are delivered on the flight. While this is similar to the real

situation, in reality any empty space on a vehicle could be loaded with an unburdened accommodation unit to facilitate return cargo. Vehicles in the model can be manually loaded with empty racks to simulate this. However, time constraints on the study prevented this analysis. As a result, some models have a significant end of model backlog for down mass that could most likely be eliminated with additional iterations.

3.3.3 Vehicle Effectiveness

It is also worth noting that the addition of an AAS eliminates the ISS delivery backlog resulting in less efficient vehicle loading for all resupply vehicles in the model. When there is a significant amount of diverse backlog, there is a large amount of cargo to choose from when determining a manifest for a given vehicle. The large backlog creates many various loading options for the vehicle and ensures that the vehicle uses most of its capacity. For most of the models in this analysis, the backlog is very low resulting in inefficient vehicle loading. This is especially true for periods of the model where the solar activity is low which results in less atmospheric drag and lower propellant resupply requirements. Shifting flights and rearranging loading priorities and requirements could alleviate some of this problem, however the scope and time constraint of this analysis limited the ability to fully address loading inefficiencies.

3.3.4 Cargo Accommodations and Carriers

The performance characteristics and tare weights of ISS accommodations and carriers are currently under review by the ISS program. It is known that some external carriers have a significantly different mass fraction than that used in the DAC 8 TM. In this study, the DAC 8 TM tare weights were retained so direct comparisons could be made and because new tare weights have not been baselined by the ISS program and are in a state of flux. Throughout this report, all cargo numbers and performance plots are shown as raw cargo only with no mass added for the cargo accommodations or carriers.

3.3.5 ISS Reboost Propellant

During the early phase of assembly, the shuttle has been used extensively to raise the altitude of the ISS. The shuttle carries contingency propellant on every mission to protect for a second rendezvous attempt and other off-nominal situations. After the shuttle is successfully docked, there is no longer a need for some of the contingency propellant. The propellant is utilized to perform ISS reboost using the shuttle thrusters. This reduces the ISS propellant resupply requirement. The shuttle will continue to perform ISS reboost when propellant is available. However, since this is not guaranteed, the TM analysis assumes no benefit from shuttle reboost of ISS.

4.0 Data Sources

The data contained in this report are based primarily on analysis using the ISS Program Traffic Model tool. This tool models the cargo transportation to and from the Space Station in a Microsoft Access database. Other sources of data include those referenced such as the DAC 8 Traffic Model Report and ISS Assembly Sequence Rev F. Utilization resupply/return requirements were provided by the ISS Payloads Office (OZ). A list of parameters used by the TM tool is included in Figure 4-1.

TRAFFIC MODEL PARAMETERS

- ISS Assembly Sequence and schedule
- ISS altitude profile
- Logistics Vehicle Characteristics
  - Shuttle, Progress M, Progress M1, ATV, HTV
  - Cargo resupply/return capabilities: total cargo up/down, pressurized cargo up/down, unpressurized cargo up/down, recoverable return cargo capability, max propellant resupply capability, water up/down, gas up/down
  - Cargo packing efficiencies
  - Pressurized, unpressurized and total volume
  - Orbit altitude adjustment parameters
  - Docking/Berthing port requirements and constraints
  - Docking/Berthing altitude constraints
  - Return capabilities (recoverable and non-recoverable)
  - Scheduling rules: launch window constraints, min/max flight rates, minimum time between flights, 1st available dates, min/max on-orbit docked durations
  - Mission profiles
- Logistics vehicle loading priorities for each vehicle type

Figure 4-1 – List of Parameters used for Traffic Models

5.0 Assumptions

5.1 General Assumptions

Most of the general assumptions for the models are derived from the DAC 8 TM and the Revision F Assembly Sequence. General assumptions for the traffic model can be found in the Final – ISS Integrated Traffic Model report (DAC 8) on page 3-1. These assumptions include establishing the aft docking port of the Service Module (SM) as the primary port for reboost/resupply vehicles coming to the Russian Segment (RS). There are exceptions to the docking port assumption as noted in the DAC 8 report.

It is assumed for all the cases in this study that the ISS will have a crew size of 3 until after the CRV is operational. After the crew quarters and the CRV are delivered, the ISS crew will be increased to 7 persons.

Oxygen for crew life support is assumed to primarily be generated on-orbit using electrolysis or Solid Fuel Oxygen Canisters (SFOC). Some oxygen and gaseous nitrogen will be resupplied by vehicles visiting the station to supplement the ISS oxygen generation systems. Visiting vehicles to the station will resupply water to the ISS to supplement the ISS water reclamation system.

5.2 Resupply Requirements

The resupply requirements for these TM analyses are derived from the DAC 8 TM resupply requirements with one significant difference. In the DAC 8 TM, the utilization requirements were assumed to be 38% of the available upmass. For this study, the ISS Payloads Office provided an estimate of their expected average annual requirement for utilization. This estimate was used as a fixed annual requirement as opposed to a percentage of available upmass to avoid artificially changing utilization requirements for each scenario analyzed.

The utilization requirements are shown in Table 5-1 for the DAC 8 TM, the AAS TMs 1 through 7 and the AAS TM 8, which includes a 30% increase in all IP utilization requirements, except the Russian requirements.

Table 5-1 - Utilization Cargo Requirements without Accommodations (Excluding RS Science)

	NASA/CSA Pressurized	NASA/CSA/ESA Unpressurized	NASDA Pressurized	NASDA Unpressurized	ESA Pressurized
AAS TM 1-7	7800 *kg*	1375 *kg*	900 *kg*	575 *kg*	500 *kg*
AAS TM 8	10140 *kg*	1787 *kg*	1170 *kg*	748 *kg*	650 *kg*
DAC 8	38% (~9663)	38%(~4270)	10%(~ 976)	900 *kg*	500 *kg*

% is based on the available upmass; all requirements are on an annual basis

There is a significant difference in the DAC 8 utilization requirements and the utilization requirements in the AAS analysis. The average total annual utilization cargo for the DAC 8 Traffic Model post assembly complete is 15,400 kg. The annual utilization cargo for the AAS cases 1-7 is around 11,150 kg. The most significant decrease in utilization cargo requirements between the DAC 8 TM and the AAS TMs is in the NASA/CSA/ESA

unpressurized category. The composition of the utilization cargo requirements is shown in Figure 5-1.

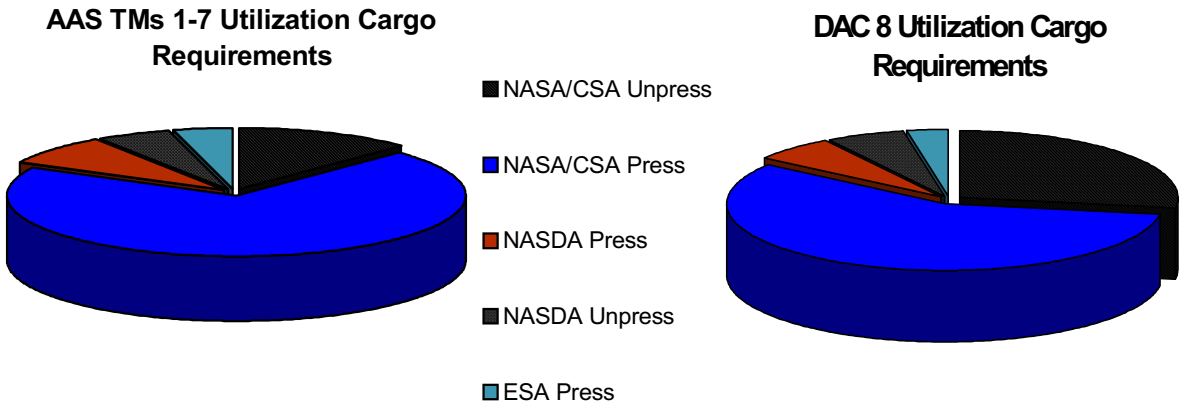

Figure 5-1 Annual Utilization Cargo Requirements for AAS TMs 1-7 and DAC 8 TM (Excluding Russian Science, cargo weight only)

In general, the ISS resupply requirements can be categorized as pressurized, unpressurized, fluid, gas and propellant. Each category has special requirements on the accommodation units, carriers and vehicle types that can accommodate the cargo. Pressurized cargo requires a vehicle that has pressurized capability. A general summary of the cargo items is included in the DAC 8 TM report. A detailed list of the resupply cargo and requirements is included in the Cargo Matrix documented in the Performance Requirements Specification for the AAS Vehicle (USA-004882). The cargo requirements for each of the AAS TMs can be found in appendices C- I.

The relative composition of the ISS resupply requirements used in the AAS TMs is shown in Figure 5-2.

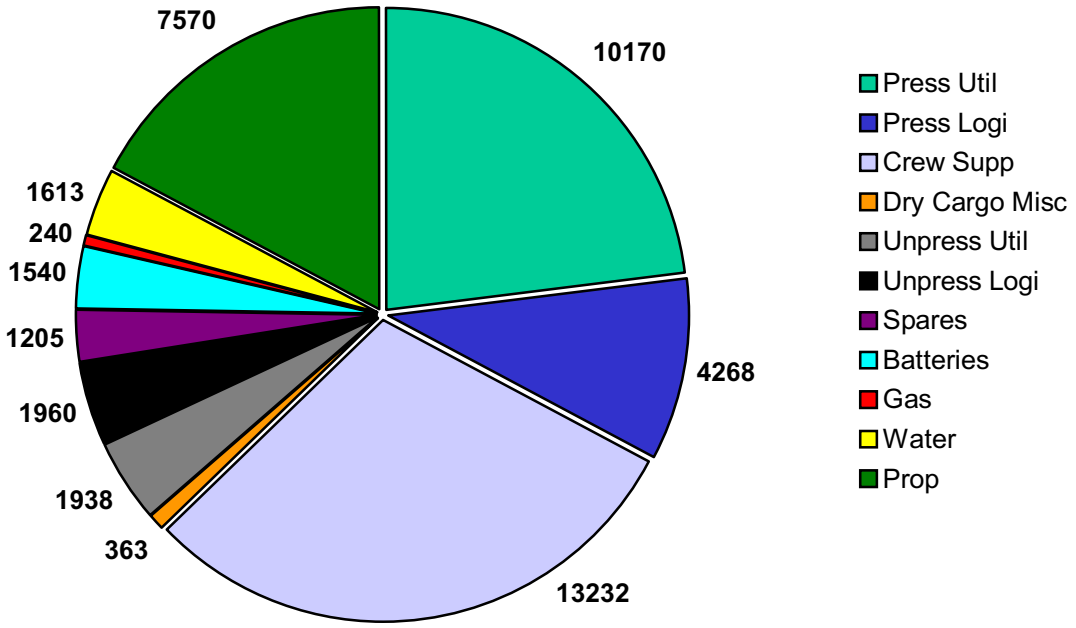

Cargo mass only, accommodation units are not included

Figure 5-2 – ISS Resupply Requirements for AAS TMs 1 – 7

5.3 Cargo Return Assumptions

It is assumed that all resupply cargo delivered to the ISS will need to the removed from the ISS on a return vehicle. Assumptions for the return cargo are consistent with the DAC 8 TM and are shown in Figure 5-3. Return cargo is identified as recoverable or non-recoverable items. Any non-recoverable cargo is subject to destructive reentry and/or disposed of as trash upon return to Earth.

ISS cargo is determined to be recoverable or non-recoverable based on a fixed percentage of the total cargo mass delivered for each cargo category. The percentages are provided by the logistics and research communities for each International Partner. The on-orbit stowage time for the return cargo also has restrictions, which are documented in the DAC 8 TM report.

TRAFFIC MODEL - CARGO RETURN ASSUMPTIONS

Recoverable Pressurized Cargo

- Utilization cargo
  - 95% of NASA & CSA cargo
  - 67% of NASDA cargo
  - 62% of ESA cargo
  - 12% of Russian cargo
- Spares/Maintenance cargo
  - 97% of NASA & CSA cargo
  - 19% of NASDA cargo
  - 0% of ESA & Russian cargo

Recoverable Unpressurized Cargo

- Utilization cargo
  - 95% of NASA & CSA cargo
  - 33% of NASDA cargo
  - 0% of ESA cargo
  - N/A for Russian cargo (assume no unpressurized utilization requirement)
- Spares/Maintenance cargo
  - 65% of NASA & CSA cargo
  - 41% of NASDA cargo
  - 0% of ESA & Russian cargo

Other Recoverable Cargo

- 32% of USOS crew supplies
- 78% of USOS CHeCS cargo

Figure 5-3 Cargo Return Assumptions

5.4 Transportation Vehicles

The vehicles used for the traffic models in this study are the Shuttle, Progress, HTV, ATV, and assumed concepts for AAS vehicles. The vehicle performance characteristics included in this section are extracted from the DAC 8 TM and the DAC 8 TM final report.

5.4.1 Shuttle

The Space Shuttle flights consist of assembly, pressurized logistics, unpressurized logistics, mixed cargo logistics flights and CRV delivery flights. The carriers on the shuttle are dependent on the type of flight and the cargo manifested on the flight. A summary of the shuttle capabilities can be found in Table 5-2.

Table 5-2 Shuttle Capabilities to 407 km at 51.6° Inclination

Shuttle Flight	Default Carriers	Up Perf.	Down Perf.
Unpress Assembly	Designated Assembly Carrier	16285	19387
Press Assembly	MPLM	16285	19387
Pressurized	MPLM	14509	19387
Unpressurized	Express Pallet, Bay 13	14509	19387
Mixed	MPLM, Express Pallet	14509	19387
CRV	TBD	16285	19387

Altitude Adjustment is 28.4 kg/km *Performance (Perf.) is in kg*

Every shuttle flight contains Middeck lockers with the capacity to carry 1135 kg. Shuttle flights with pressurized capability carry a Multi-Purpose Logistics Module (MPLM) capable of carrying 9,071 kg of cargo with accommodation units to or from the station. Unpressurized cargo utilizes Express Pallets, Shuttle Orbiter Bay 13, Spacelab Pallets, or Unpressurized Logistics Carriers (ULC). The capabilities of the shuttle carriers are summarized in Table 5-3.

Table 5-3 - Shuttle Carriers

Carrier	Press/Unpress	Tare Weight	Up Capability	Down Capability
MPLM	Pressurized	4794	9071	9071
Express Pallet	Unpressurized	635	1360	1360
Bay 13	Unpressurized	450	1900	1900
SpaceLab	Unpressurized	414/635/1270	3175/4128/5874	3175/4128/5874
ULC	Unpressurized	830	3630	3630

All mass is given in kg

The shuttle fuel cells generate water as a byproduct, which is transferred to the ISS for use on the station. For the purposes of the traffic model, the fuel cells act as a carrier for water going up to the station. The shuttle has the ability to return more cargo (by weight) than it can deliver. However, the down mass is subject to the carriers, which are manifested. The carriers can accommodate the same amount of weight down and up. All down cargo on the shuttle is recoverable.

5.4.2 Russian Space Agency (RSA) Vehicles

The TM uses 3 different types of Russian cargo vehicles. All of the Russiancargo vehicles use Progress cargo carriers, propellant carriers, and gas tanks. The Progress M contains water tanks. For most of the AAS TMs in this study, the maximum amount of propellant is loaded onto Progress flights. Table 5-4 gives a brief summary of the Russian cargo vehicles. More details on the Progress can be found in the DAC 8 TM report.

Table 5-4 Russian Cargo Vehicle Performance to 133 km at 51.6° Inclination

Vehicle	Up Perf.	Down Perf.	Volume
Progress M1 (2510)	3105	1600	6.6
Progress M	2930	1600	6.6
Progress M1 (2230)	2810	1600	6.6

Altitude Adjustment is 1.43 kg/km

Performance (Perf.) is in kg; Volume is total useable pressurized volume in m^3

All Progress vehicles are able to accommodate dry cargo in a pressurized compartment as well as propellant, gas and water. In the TM tool, all Russian carrier tare weights are included in the vehicle weight. The Progress is a destructive reentry vehicle. All cargo returned from the station on a Progress is non-recoverable.

The Soyuz is another RSA Vehicle. The primary function of the Soyuz is crew transfer and not cargo delivery. Although the Soyuz has limited cargo capability, no cargo is

loaded on the Soyuz for the traffic model analysis. It is assumed that the Soyuz will be used as the primary crew return vehicle before the delivery of the CRV.

5.4.3 ATV

The ATV is the European Space Agency cargo vehicle. It has the ability to carry 10,401 kg of cargo to the station between its cargo carrier, the propellant tanks, the gas tanks and the water tanks. A summary of the ATV carrier abilities can be found in Table 5-5.

Table 5-5 ATV Performance to 175 km at 51.6° Inclination

Carrier	Delivery Capability	Return Capability
Cargo Carrier	6500	6500
Prop Carrier	6775	N/A
Gas tanks	246	N/A
Water tank	972	972
Total	**10401**	**6340**

Altitude adjustment is 3.5 kg/km

The carrier capability is based on the values used in the traffic model tool and includes the total mass of the cargo and accommodation units that can be loaded on the specified carrier. The down cargo capability of the ATV is limited to 6,340 kg of non-recoverable cargo. Notice that the total capability is less than the sum of the component carrier capabilities. This means that all carriers cannot be loaded to the maximum capacity simultaneously.

5.4.4 HTV

The HTV, a NASDA cargo vehicle, has two configurations. One configuration uses all pressurized racks and can deliver 7,000 kg to the station at an altitude of 407 km and remove the same amount of non-recoverable cargo. The second configuration accommodates both pressurized and unpressurized cargo through a combination of pressurized racks and an unpressurized pallet. The mixed configuration can deliver up to 6,500 kg to an altitude of 407 km and remove the same amount of trash. The performance at all the other altitudes can be estimated using an altitude adjustment factor of 3.4kg/km. The HTV is a destructive reentry vehicle with no recoverable down mass capability.

5.4.5 AAS

In order to evaluate the effects of an additional vehicle on the traffic models, various mock AAS vehicles were created. There are some common assumptions for all AAS vehicles evaluated in the analysis. It is assumed that all AAS vehicles are unmanned. Also, none of the AAS models have recoverable downmass capability. It was also assumed that the AAS vehicle initial operational capability would be at the beginning of fiscal year 2006. Another assumption common to all mock AAS vehicles is that they do not have the capability to carry propellant or perform ISS reboost and attitude control.

The performance characteristics and flight rates for the mock AAS vehicles were determined using the methodology described in Section 3 of this report.

6.0 TRAFFIC MODEL ANALYSIS/RESULTS

The AAS Traffic Model analysis examines the effects of an additional vehicle to the logistics resupply/return for the operation and utilization of the ISS. The analysis uses the ISS Traffic Model (TM) tool to evaluate various scenarios that include an alternate vehicle.

There are 3 main studies that were evaluated in the analysis. The first study is a review of the DAC 8 TM. The second study examined the maximum and minimum cargo cases for an AAS vehicle. The third study was a defined nominal case that assessed the effects of changing some of the variables in the model.

The main parameters that are varied in the AAS Traffic Model studies are the existing vehicle flight rates and the characteristics of the AAS vehicle. International Partner participation is minimized in some cases by lowering the flight rate of the ATV and HTV to 0 per year. Reductions in the Progress vehicle flight rate were also analyzed but this vehicle type was not totally eliminated in any model because of the need to fulfill propellant resupply requirements.

In this section, each TM scenario is described and a summary of the results is presented.

6.1 Minimum Cargo AAS Case (TM 2)

The minimum cargo AAS case is intended to represent a scenario that has the minimum anticipated need for an AAS vehicle and results in the lowest annual cargo requirement for the vehicle. This case consist of adding 2 AAS flights per year to a modified baseline case. The minimum case assumes a shuttle logistics flight rate of 4 per year and 1 CRV flight every 3 years. Shuttle flights include 1 unpressurized cargo flight per year and 3 mixed cargo flights per year. This scenario assumes that all planned IP vehicles are available with flight rates shown in Table 6-1.

Table 6-1 Summary of Minimum Cargo Case Characteristics

Reference Case Name	Crew Size	Flight Rate (per year)				
		Shuttle	AAS	HTV	ATV	Progress
TM 2	7	4/4/5	2	2	1	4

For the purpose of the model, the AAS vehicle assumed for this scenario is described in Table 6-2. The AAS model is not intended to define AAS requirements for this scenario but is based on the average annual backlog of the model without the AAS and on an assumed compliment of carriers and accommodations. The results of the model are provided in terms of the cargo loaded on the mock AAS without accommodations. These results are included in Table 6.3 and illustrated in Figure 6-2. A summary of the delivery and return cargo loads for all vehicles in the model is shown in Figure 6-1.

Table 6-2 Minimum Cargo Case AAS Vehicle Definition

Performance	Pressurized	Unpressurized	Gas	Water
8000 *kg*	7200 *kg*	1200 *kg*	88 *kg*	200 *kg*

Table 6-3 Summary of AAS Loading for the Minimum Cargo AAS Case

	Pressurized	Unpressurized	Gas	Water	Total Cargo
Average Up	1601	578	32	22	2232
Maximum Up	2725	1200	88	54	3279
Average Down	1281	188	-	43	1512
Maximum Down	2731	999	-	100	3032

Mass of the cargo only, accommodation unit mass is not included
All mass is given in kg

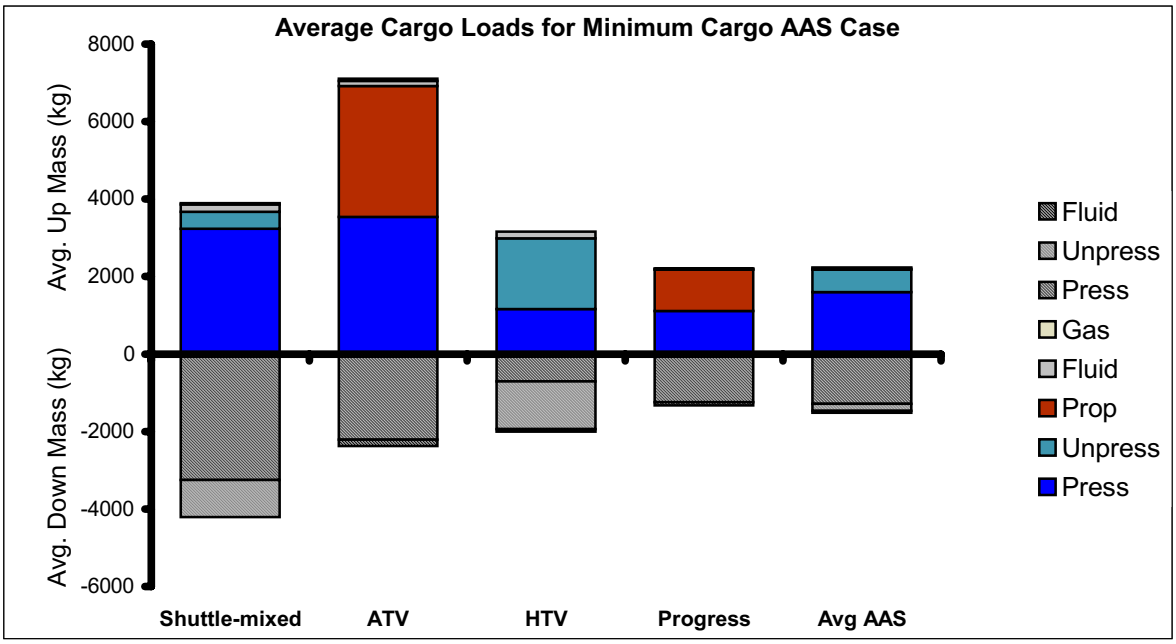

Mass of the cargo only, accommodation unit mass is not included

Figure 6-1 Summary of Cargo Loading for the Minimum Cargo AAS Case

The AAS loaded an average of 4682 kg of which 2232 kg is cargo and 1850 kg is accommodation. At the end of the 15-year model, 1912 kg of required propellant was not delivered. This backlog is not considered significant since the next Progress or ATV can deliver this propellant. In addition, adjustment could be made to the manifest of some of the Progress and ATVs in this model to mitigate the backlog.

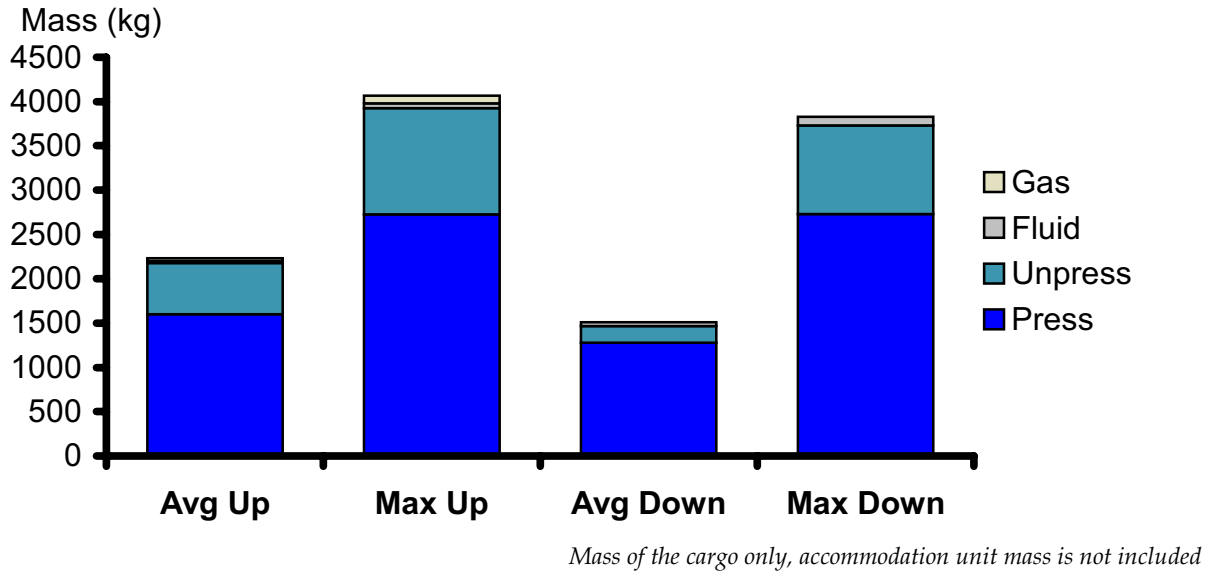

Figure 6-2 Summary of AAS loading for the Minimum Cargo AAS Case
This TM analysis represents the minimum AAS cargo case since all other vehicles are assumed to be available

The initial flight schedule resulted in 9 out of 14 post assembly complete years, which fell short of the micro-gravity quiescent period requirement. Approximately 25 flights would need to be adjusted by 3 to 10 days in order to obtain an acceptable micro gravity profile. Based on past experience, the required schedule adjustments could be made without significant impact to the average cargo loads on the resupply vehicles.

The results of this analysis were used to develop DRM AAS 3 in the AAS Performance Requirements document. The detailed data generated from this TM analysis is included in BAH-AAS-01 Detailed Traffic Model Reports For AAS Minimum Cargo Case.

6.2 Maximum Cargo AAS Case (TM 3)

The Maximum cargo case is intended to represent a scenario that would result in the maximum anticipated need for an AAS vehicle. This scenario was produced by eliminating the use of the HTV and ATV for cargo transportation to the station. The shuttle rate is the same as the minimum case, 3 mixed flights per year, 1 unpressurized flight per year and 1 CRV flight every 3 years. The last scheduled shuttle flight in October of 2020 was scrubbed because the cargo upload demand was not great enough to justify the flight. In order to fulfill the propellant requirements, the Progress was modeled with a flight rate of 4 per year.

Table 6-4 Summary of Maximum Cargo AAS Case Characteristics

Reference Case Name	Crew Size	Flight Rate (per year)				
		Shuttle	AAS	HTV	ATV	Progress
TM 3	7	4/4/5	5	0	0	4

The AAS is scheduled for 5 flights per year as a result of the HTV and ATV launch reductions. The performance of the AAS is 6800 kg in the maximum cargo case as opposed to 8000 kg in the minimum case.

Table 6-5 Maximum Case AAS Vehicle Definition

Performance	Pressurized	Unpressurized	Gas	Water
6800 *kg*	6000 *kg*	800 *kg*	44 *kg*	100 *kg*

The results of the Maximum cargo AAS case are illustrated in Table 6-6 and the Figures 6-3 and 6-4. The total backlog at the end of the 15-year model is 3006 kg with 1468 kg of RS gas and 1538 kg of propellant.

Mass of the cargo only, accommodation unit mass is not included

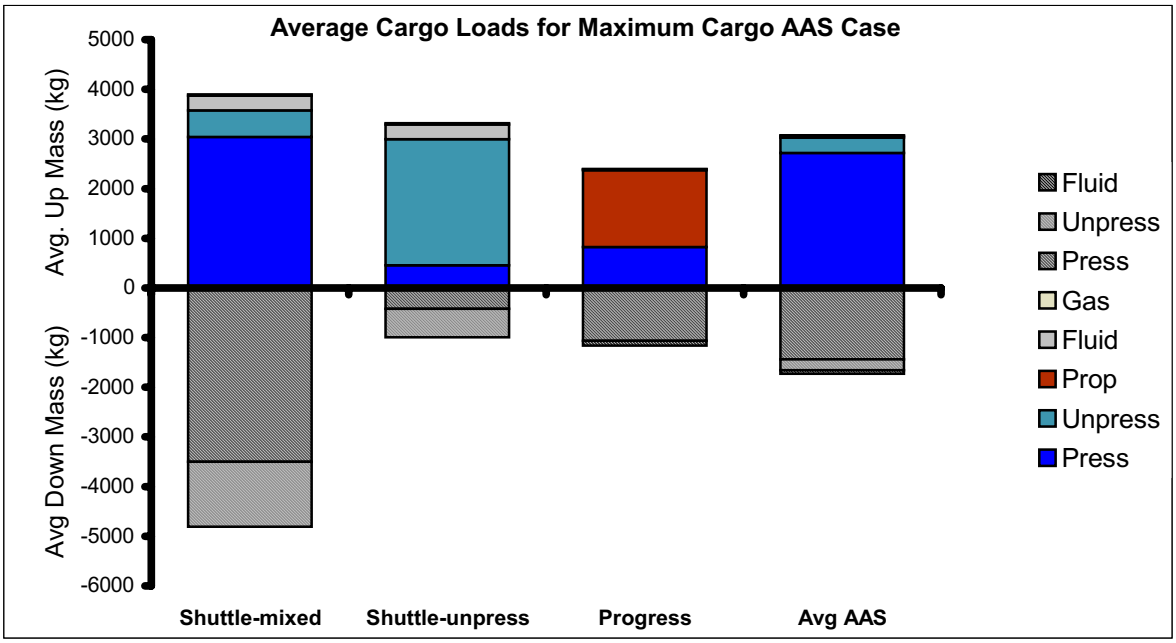

Figure 6-3 Average Cargo Loads for the Maximum Cargo AAS Case (TM 3)

For the maximum cargo case, the AAS vehicle delivers an average cargo load slightly larger than the Progress. The performance of the AAS vehicle is illustrated in Figure 6-4.

Table 6-6 Summary of AAS loading for the Maximum Cargo AAS Case

	Pressurized	Unpressurized	Gas	Water	Total Cargo
Average Up	2720	311	10	30	3072
Maximum Up	3000	800	44	100	3750
Average Down	1440	219	-	71	1731
Maximum Down	3000	800	-	100	3750

Mass of the cargo only, accommodation unit mass is not included
All mass is given in kg

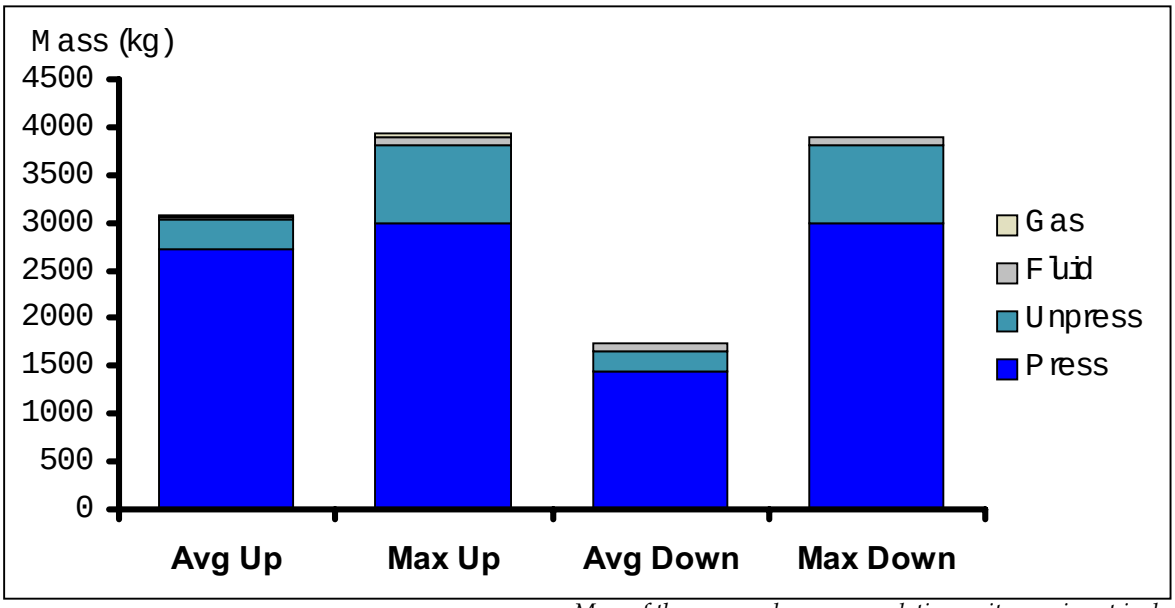

Mass of the cargo only, accommodation unit mass is not included

Figure 6-4 Summary of AAS loading for the Maximum Cargo AAS Case

The results of this TM analysis were used to develop DRM AAS 2, which is documented in the AAS Performance Requirements document. The detailed data generated from this TM analysis is included in BAH-AAS-02 Detailed Traffic Model Reports For AAS Maximum Cargo Case.

6.3 Nominal Cases

The nominal cases represent cases with additional constraints that more accurately represent the anticipated program needs based on current predictions. All nominal cases assume a failure rate of approximately 10% for HTVs and ATVs based on historical data for expendable launch vehicles. The nominal cases also assume that 1 scheduled shuttle flight every 3 years will not deliver cargo to the ISS due to schedule

slips. For this analysis, scrubbed flights from the nominal cases are chosen by reviewing the flight schedule and removing the determined number of flights at approximately equal intervals. The Progress failure rate was assumed to be accounted for in the baseline cases by reducing the expected Progress launches from 6 to 4 vehicles per year. No additional Progresses were removed from the nominal cases.

Three HTV flights, 2 ATV flights and 5 shuttle flights were scrubbed in order to simulate predicted failures and skipped flights. HTVs were removed in 2009, 2014 and 2019 while ATVs were removed in 2011 and 2017. For the purpose of this analysis, it was assumed that a vehicle will not fail twice in a row and that the different vehicles (ATV and HTV) will not fail in the same year. This is a conservative assumption and does not account for the worst-case scenario of multiple failures close together. The 5 shuttle flights removed are in 2007, 2010, 2013, 2016 and 2019 to meet the assumption that 1 planned shuttle flight every 3 years does not reach the station as scheduled.

There are 5 different variants of the nominal case as illustrated in Tables 6-7 and 6-8. In the baseline nominal case (TM 4) a mixed cargo (pressurized and unpressurized) AAS vehicle was modeled to eliminate the resupply backlog. Two variants from the baseline nominal case were modeled to evaluate the effects of changing the AAS vehicle capability to all pressurized cargo (TM 5) and all unpressurized cargo (TM 6). Another variant of the nominal case was modeled to assess the impacts of a reduction in the Progress flight rate to 3 per year in 13 of the 14 post assembly years (TM 7). Propellant requirements due to high solar activity in 2012 require 4 Progress flights that year. The last nominal case variant was modeled to assess the impacts of an increase in the pressurized and unpressurized utilization requirement for NASA/CSA, ESA and NASDA by 30% (TM 8). A summary of the nominal case variations is shown in Table 6-7. The AAS vehicle performance assumed for each nominal case is described in Table 6-8.

Table 6-7 Summary of Nominal Cases Characteristics

Case	Annual Utilization	Crew Size	Flight Rate (per year)				
			Shuttle	AAS	HTV	ATV	Progress
TM 4	11150 *kg*	7	4/4/5	5 (mixed)	2	1	4
TM 5	11150 *kg*	7	4/4/5	5 (press)	2	1	4
TM 6	11150 *kg*	7	4/4/5	3 (unpress)	2	1	4
TM 7	11150 *kg*	7	4/4/5	5 (mixed)	2	1	3
TM 8	14455 *kg*	7	4/4/5	5 (mixed)	2	1	4

Table 6-8 Nominal Cases AAS Vehicle Definition

Case	Performance	Pressurized	Unpressurized	Gas	Water
TM 4	8000 *kg*	4000 *kg*	700 *kg*	88 *kg*	200 *kg*
TM 5	8000 *kg*	4000 *kg*	-	88 *kg*	200 *kg*
TM 6	1850 *kg*	-	1850 *kg*	-	-
TM 7	8000 *kg*	5850 *kg*	700 *kg*	88 *kg*	200 *kg*
TM 8	8000 *kg*	4000 *kg*	700 *kg*	88 *kg*	200 *kg*

6.3.1 Nominal Case with Mixed Cargo AAS Vehicle (TM 4)

All post assembly complete shuttle flights for this case are mixed flights that carry on average 511 kg of unpressurized cargo, 3418 kg of pressurized cargo, 193 kg of fluid and 25 kg of gas. The average return load for the shuttle flights is 5067 kg of cargo with 74% pressurized cargo and 26% unpressurized cargo.

The last scheduled shuttle flight in October of 2020 was scrubbed from the model because there was not sufficient cargo in the backlog to produce a realistic manifest. The next to last shuttle flight was manifested with only 1699 kg of cargo due to the small backlog of cargo requirements that the shuttle can accommodate at the end of the model.

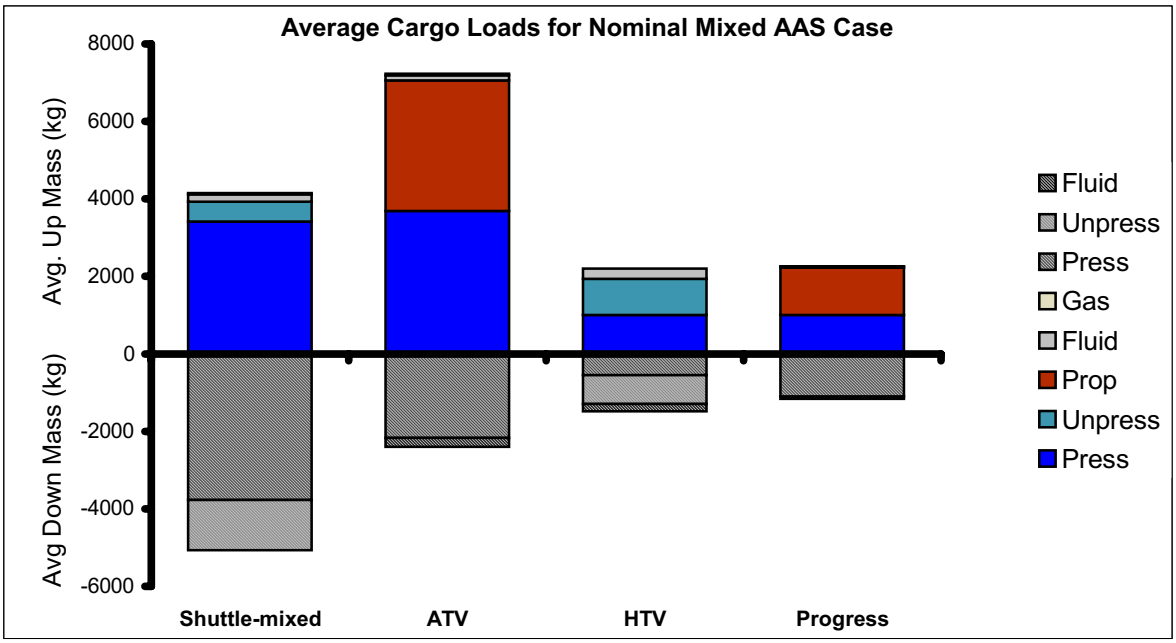

Mass of the cargo only, accommodation unit mass is not included

Figure 6-5 Average Cargo Loads for the Nominal Mixed AAS Case

The ATVs on average deliver more resupply cargo to the station than any other logistics vehicle. The ATV cargo loads consist mainly of propellant and pressurized cargo. The Progress loads also mainly consist of propellant and pressurized cargo. On average, the Progress M1 (2510) carries 1891 kg of propellant and approximately 1226 kg is available for ISS reboost and attitude control. Without dedicated unpressurized shuttle flights the HTV carries a large amount of unpressurized cargo. The HTV averages 932 kg of unpressurized cargo, which accounts for nearly half of the 2202 kg average of total unpressurized cargo.

The nominal case with a mixed AAS resulted in a total end-of-model backlog of 6,339 kg. The backlog consisted of 2,466 kg of water and 3,873 kg of prop. The water backlog can be accounted for by the fact that in the model only the HTV can carry water. If all the vehicles are assumed to carry water, 2,466 kg could easily be made up

over the life of the model. The propellant backlog can also be considered negligible when the amount is viewed over the time frame of the model and considering that 1 of the removed ATV flights could make up the propellant backlog. However, it is important to note that there are time periods where the amount of propellant on the station does not meet the propellant reserve requirement (see 'Propellant Profile', Nominal Case with Mixed AAS Traffic Model Reports, BAH-AAS-03 Detailed Traffic Model Reports For Nominal AAS Mixed Cargo Case). Further analysis with the traffic model might mitigate meeting the reserve propellant requirement shortfall by shifting flight dates, the schedule or loading priorities. This TM is represented by DRM AAS 4 in the AAS Performance Requirements document. Detailed results of this model are included in BAH-AAS-03 Detailed Traffic Model Reports For Nominal AAS Mixed Cargo Case.

6.3.2 Nominal Case with an all Pressurized Cargo AAS Vehicle (TM 5)

The nominal case with an all pressurized AAS vehicle is similar to the nominal mixed case. The cargo requirements for both cases are the same and the general schedule is similar. The major difference between the traffic models is that the model with all pressurized AAS vehicles includes 1 unpressurized cargo shuttle flight per year in place of a mixed cargo shuttle flight. The same HTV and ATV flights are scrubbed, however the scrubbed shuttle flight in 2013 is an unpressurized cargo flight instead of a mixed cargo flight. Also, the last shuttle flight in 2020 that was scrubbed in the nominal mixed cargo case is included in the nominal all pressurized cargo case.

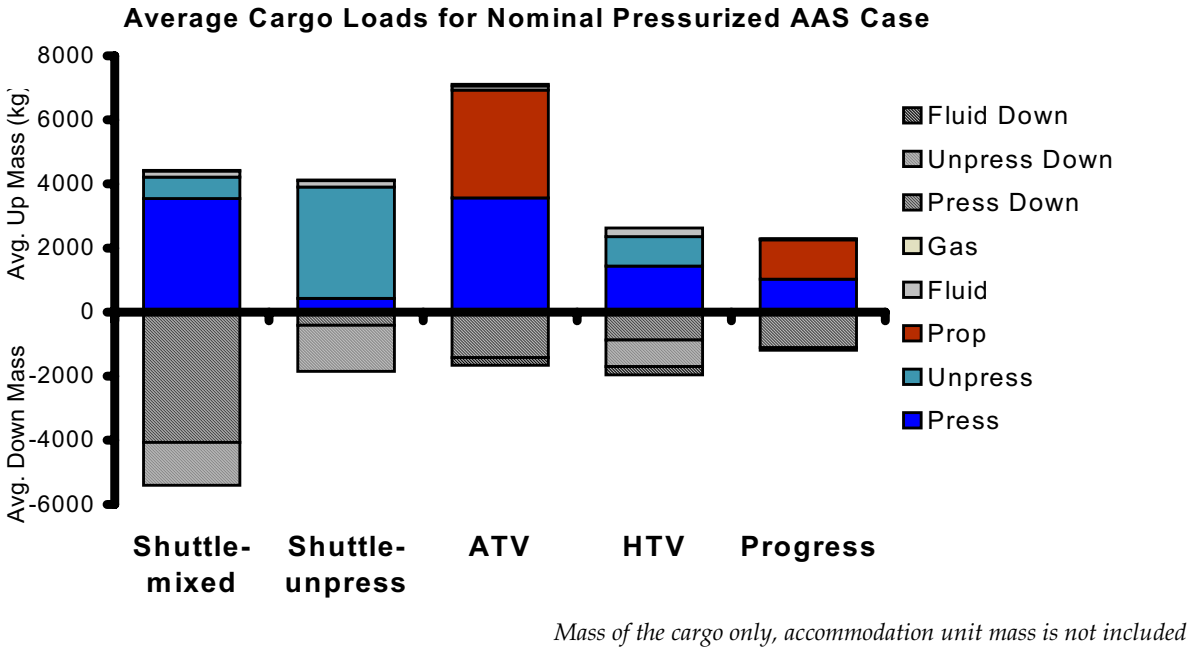

Figure 6-6 Average Cargo Loads for the Nominal Pressurized AAS Case

The results of the TM 5 analysis are summarized in Figure 6-6. The mixed cargo shuttle flights and unpressurized cargo shuttle flights deliver approximately the same amount of raw cargo. However, when accommodation units are considered, the total mass of the delivered cargo and accommodations is 7,650 kg for the mixed cargo shuttle flights and 4,261 kg for the pressurized cargo Shuttles flights. The total average

cargo delivered on the shuttle flights is lower than the DAC 8 averages for bothhe mixed cargo and unpressurized cargo configurations. The general decrease in shuttle cargo delivery loads can be attributed to a lower efficiency in the vehicles due to the limited backlog in the model. The large discrepancy, around 3500kg, of delivered cargo for the unpressurized Shuttles in the nominal all pressurized AAS case versus the DAC 8 TM cannot be accounted for only in the decreased loading efficiency. The unpressurized utilization requirements were lower in the nominal cases than in the DAC 8 TM by approximately the same amount that the average unpressurized loads decrease.

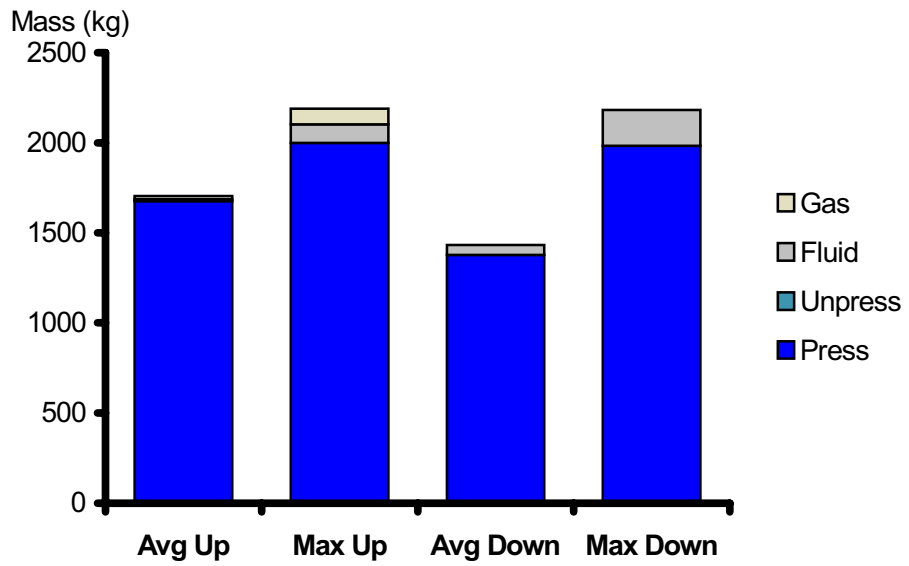

Figure 6-7 Summary of AAS Cargo Loads for the all Pressurized Case (without accommodations)

The cargo delivered and returned by the AAS for the nominal case with an all pressurized AAS is summarized in Figure 6-7. On average the AAS vehicle in this model delivered 1703 kg of cargo to the station and the maximum amount delivered was 2000 kg. The AAS vehicle also delivered up to 102 kg of fluid and 88 kg of gas. The maximum of 88 kg of gas was constrained by the maximum vehicle capability to deliver gas. The average return cargo load from the station by the AAS is 1433 kg. The maximum return load for the AAS was 1982 kg. For some AAS flights in this model, the fluid returned was the vehicle fluid capacity of 200 kg. This TM is represented by DRM AAS 5 in the AAS performance requirements document. Detailed results of this TM are included in BAH-AAS-04 Detailed Traffic Model Reports For Nominal AAS Pressurized Cargo Case.

6.3.3 Nominal Case with an all Unpressurized AAS Vehicle (TM 6)

The flight schedule and the requirements for the all unpressurized AAS vehicle case is the same as for the all pressurized AAS case. The only difference isthe capability of 2 of the vehicles in the model. For this case all shuttle flights were modeled to have the capability to carry pressurized cargo only and conversely, the AAS only has the capability to carry unpressurized cargo. It was determined that adding an all

unpressurized AAS effectively eliminated the need to deliver unpressurized cargo on the shuttle.

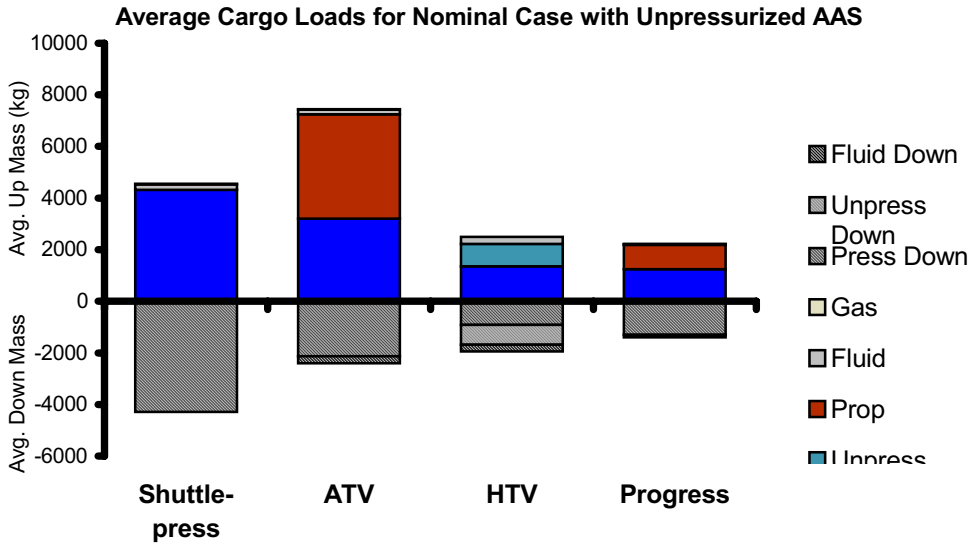

Mass of the cargo only, accommodation unit mass is not included

Figure 6-8 Average Cargo Loads for the Nominal Unpressurized AAS Case

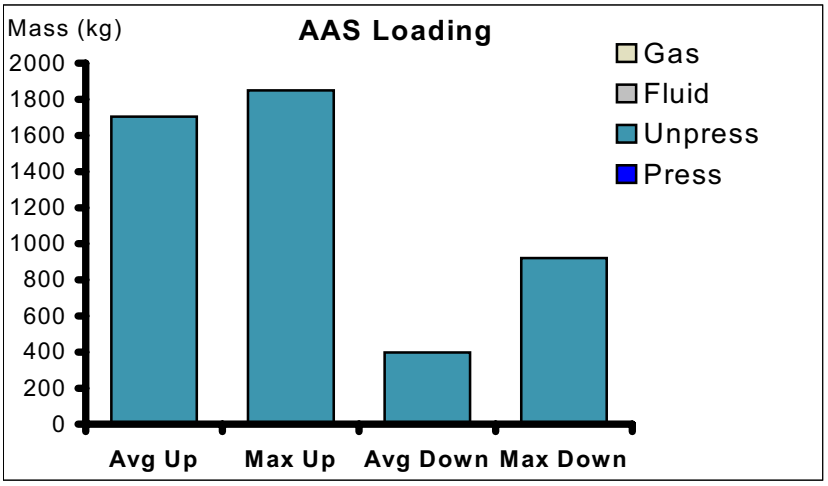

Mass of the cargo only, accommodation unit mass is not included

Figure 6-9 AAS Cargo Loads for the Nominal Unpressurized Cargo Case

The average cargo loads for the existing logistics vehicles for this modelare shown in Figure 6-8. The average cargo loads for the unpressurized AAS vehicle are shown in Figure 6-9. Based on the unpressurized backlog results from running the model without an AAS, it was determined that approximately 3 unpressurized AAS vehicles per year could eliminate the backlog if the AAS vehicle had approximately the same performance as in the other models. At the end of the 15-year model, the unpressurized delivery backlog was zero but a large pressurized backlog of 30,754 kg had accumulated even though all shuttle flights in this model carry pressurized cargo

only. In addition, this model resulted in a return backlog of recoverable unpressurized cargo of 61384 kg. This result is due to the fact that the unpressurized accommodations were not manifested on any of the shuttle flights to facilitate the return. If the accommodations were manifested, the model would result in an increased delivery backlog of pressurized cargo. Based on the ISS requirements and logistics vehicles used in this study, it was deemed that an all unpressurized AAS fleet would not adequately address ISS requirements. Therefore, no DRM was created using this TM result. A DRM was created however, that assumes a fleet of AAS vehicles, some of which are all unpressurized and others are all pressurized. This "mixed fleet" AAS is represented by DRM AAS 6 in the AAS performance requirements document. The detailed results of TM6 are included in BAH-AAS-05 Detailed Traffic Model Reports For Nominal AAS Unpressurized Cargo Case.

6.3.4 Nominal Case with Decreased Progress Flights (TM 7)

The nominal case with decreased Progress flights is based on the requirements and vehicles used in the nominal case, however, 13 Progress flights are scrubbed after assembly complete. Although the scrubbed flights lower the Progress flight rate to 3 per year for most years, propellant demand requires 4 Progress flights in 2012 when the predicted high solar activity results in an increased propellant requirement. Another change between the nominal mixed AAS case and the decreased Progress case is the vehicle performance capability of the AAS. In the nominal mixed AAS case, the AAS vehicle can carry 4000 kg of pressurized cargo to the station. In the reduced Progress case, the pressurized cargo performance of the AAS was increased to 5850 kg. This increase was needed to allow the AAS to deliver additional dry cargo, which was off-loaded from Progress vehicles and ATVs to allow those vehicles to deliver a maximum amount of propellant. As in the nominal case, the decreased Progress case utilizes all mixed cargo shuttle flights after assembly complete and the last shuttle flight in October of 2020 was removed.

All the vehicles except the HTV have an increased average loading as a result of the scrubbed Progress flights. Most of the required cargo is delivered to the station with an end-of-model backlog of 5604 kg of propellant. With fewer Progress flights, the propellant backlog was understandably higher than the other cases studied. In this study, the Progress and the ATV are the only vehicles capable of carrying propellant. Both of the vehicles average loads for propellant is close to their maximum capacity. The ATV delivers two types of propellant for ISS use. It can deliver approximately 860 kg of propellant, which can be transferred to the ISS for use by service module or Progress thrusters. It also delivers up to 4000 kg of propellant, which can be used by the ATV thrusters while the ATV is attached to the ISS for ISS altitude maintenance and attitude control. For this model, several adjustments to the flight schedule were made to allow the ATV to remain on orbit longer to allow the ISS model to utilize the full propellant capacity of the ATV.

The return cargo backlog for this case was 11,073 kg. The pressurized return cargo backlog was 5187 kg. The return cargo backlog is shown in Figure 6-10.

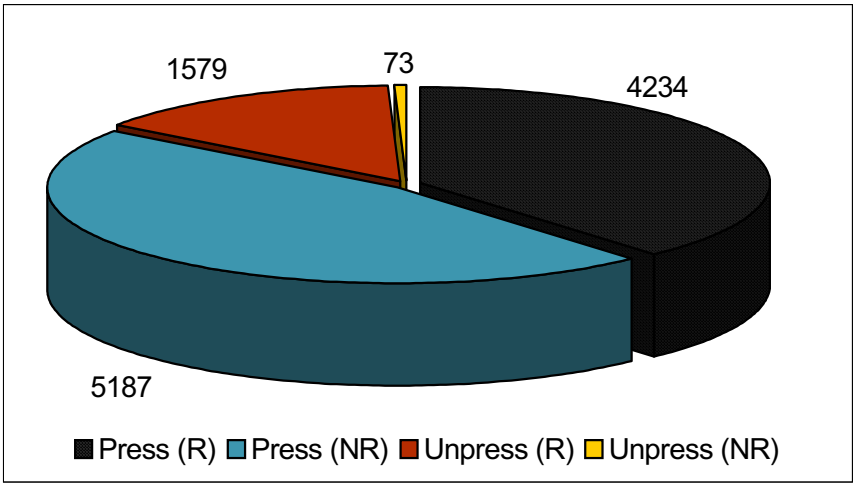

Mass of the cargo only, accommodation unit mass is not included

Figure 6-10 Return Cargo Backlog for Decreased Progress Case

The reduced Progress TM includes AAS vehicle flights that fully utilize the unpressurized cargo carriers, pressurized cargo racks, and the gas tank accommodation units. A summary of the AAS cargo loads is included in Figure 611.

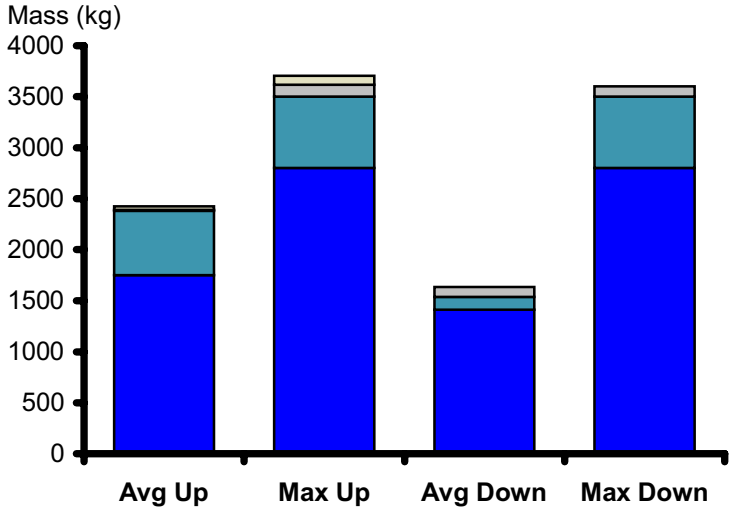

Mass of the cargo only, accommodation unit mass is not included

Figure 6.3.9 - Summary of AAS Loading for the Decreased Progress Flights Case

The TM results indicate that with significant schedule adjustments, the AAS can compensate for some decrease in the Progress flight rate. Since the AAS does not deliver propellant, which is a primary cargo of the Progress, adjustments must be made to the remaining Progress flights and to the ATV flights to maximize the vehicles capability to deliver propellant. The AAS can contribute to the compensation for fewer Progress vehicles by delivering the dry cargo, which would have been loaded on the Progress, and the dry cargo, which is off-loaded from the remaining Progress and ATVs to allow more propellant on those vehicles. The detailed results of TM 7 are included in

BAH-AAS-06 Detailed Traffic Model Reports For Nominal AAS Mixed Cargo Case With A Reduced Number Of Progress Flights.

6.3.5 Nominal Case with Increased Utilization (TM 8)

The increased utilization case is based on the nominal case with all NASA, CSA, ESA, and NASDA utilization requirements increased by 30%. The shuttle flights in this model were all assumed to be mixed cargo flights and the AAS was modeled as a mixed cargo vehicle. The last shuttle flight in October 2020 was scrubbed due to an unrealistic manifest. At the end of the model the delivered backlog consisted of 2466 kg of water, 157 kg of RS Gas, and 3873 kg of propellant. The backlog of water is a result of the HTV being the only vehicle able to deliver resupply water in addition to the shuttle fuel cell water. This issue also appears in the nominal mixed AAS case and is addressed in Section 6.3.1. Also similar to the nominal mixed AAS case, the propellant backlog at the end of the model is very small when considered over the life of the 15-year model.

The return cargo backlog at the end of the model is 25,327 kg. The majority of the return backlog is 21,393 kg of pressurized recoverable cargo. The recoverable unpressurized cargo contributes 3,556 kg to the return backlog. The shuttle is the only vehicle in the model that has the capability to return recoverable cargo. There is only 378 kg of non-recoverable cargo, which is considered negligible. None of the vehicles capable of returning non-recoverable cargo has an average down mass, pressurized or unpressurized, that is near the performance capacity of the vehicle. Slack in the model could contribute to the non-recoverable cargo backlog along with not being able to fully utilize vehicle capability for return cargo as discussed in Section 3.3.2. As mentioned previously it may be possible to reduce the recoverable cargo backlog by manifesting empty accommodations on shuttle flights with delivery margin and using the accommodations to return more recoverable cargo.

The AAS vehicle delivers an average of 2396 kg of cargo to the station. In this model, the AAS vehicle manifest requires the maximum capacity of the mock carriers that are modeled. In other words, some AAS vehicles are loaded to capacity. There are AAS flights, which deliver 2000 kg of pressurized cargo with 2000 kg of assumed accommodation units. The capacity of the AAS pressurized cargo carrier is defined to deliver is a total of 4000 kg. The average unpressurized cargo to station delivered is 679 kg, which is close to the assumed 700 kg capacity for the AAS, unpressurized carrier. Without unpressurized shuttle flights, at least 71 of the 75 AAS flights delivered the maximum of 700 kg of unpressurized cargo. Despite there not being any unpressurized backlog at the end of the model there was typically 2000-3000 kg of backlog during the model and at one point the backlog was over 6000 kg. If the user defined constraint of 700 kg for the delivered unpressurized cargo on the AAS were increased, it would have an impact on the traffic to the station. There are also flights were the AAS unpressurized down mass reaches the maximum limit of 700 kg.

Table 6-9 AAS Loading Summary for the Increased Utilization Case

	Press	Unpress	Fluid	Gas	Cargo
Avg Up	1688	679	12	16	2396
Max Up	2000	700	102	88	2700
Avg Down	1422	124	156	0	1702
Max Down	1967	700	400	0	2600

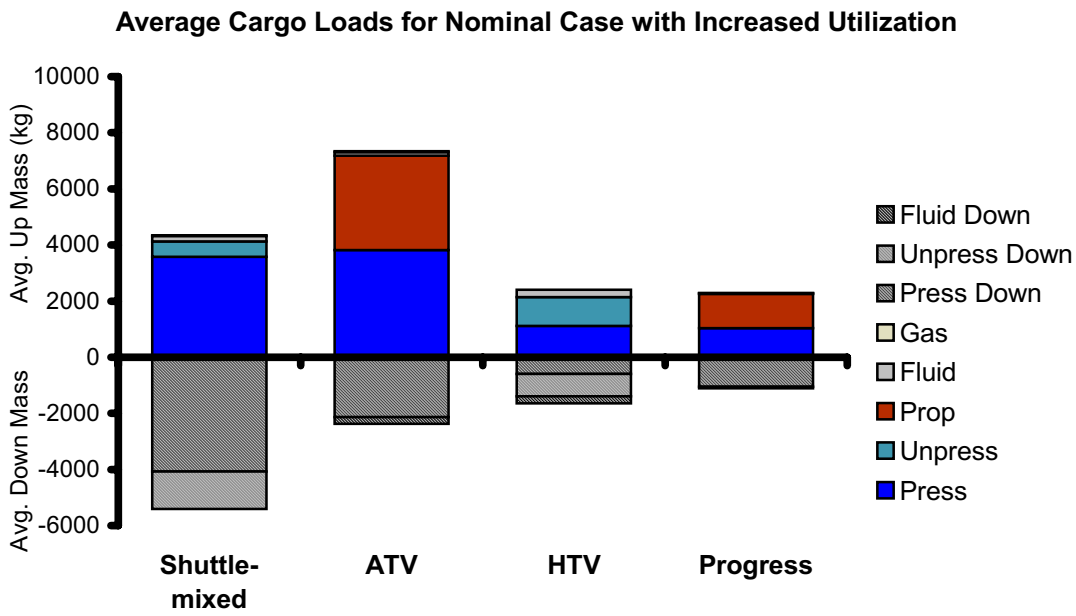

Mass of the cargo only, accommodation unit mass is not included

Figure 6-12 Average Loads for the Increased Utilization Case

The results of the increased utilization case are shown in Table 6-9 and Figure 6-12. The performance characteristics required by the AAS in this model were bounded by the maximum cargo case and the nominal case. For this reason, a DRM representing the case was not developed. The detailed results of TM 8 are included in BAH-AAS-07 Detailed Traffic Model Reports For Nominal AAS Cargo Case With A 30% Increase In Utilization Requirements.

6.4 End-of-Model Backlog Comparison

Figure 6-13 shows a comparison of the resupply requirements that remain undelivered at the end of each traffic model analysis. The DAC 8 TM delivery backlog is included for reference. For the DAC 8 TM, the delivery backlog was approximately 38,000 kg, which included approximately 36,000 kg of pressurized cargo. The AAS TMs were designed to eliminate the delivery backlog and as shown in the figure this objective was essentially met by all the AAS TMs except for TM 6, the case with an all unpressurized cargo AAS vehicle. For the maximum cargo case and the minimum cargo case, the total backlog at the end of the model is less than 3000 kg. A small backlog of this

magnitude at the end of the model basically represents thecargo that will be delivered on the next logistics vehicle.

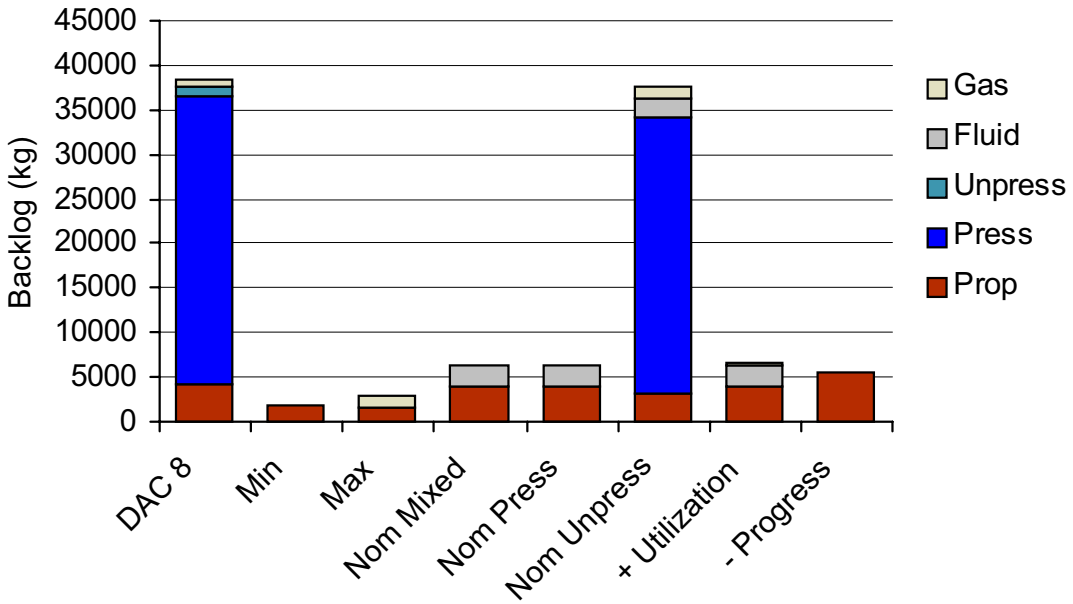

Mass of the cargo only, accommodation unit mass is not included

Figure 6-13 Comparison of End-of-Model Delivery Backlog

The minimum and maximum cases come very close to meeting the propellant demand. In both cases, the propellant backlog is less than 2000 kg and can be made up with a Progress flight. The propellant backlog is also not considered a significant issue because the reserve requirement is met for both the minimum and maximum AAS case throughout the 15-year model (see Appendices C and D for details). For the nominal cases, a propellant backlog exists at the end of the model between 3000 and 4000 kg. This is caused primarily by the removal of two ATV flights. The removal of two large propellant deliveries is more difficult to compensate for since only two vehicle types can deliver propellant. The Nominal case with an all unpressurized AAS (TM 6) has a propellant backlog of 3270 kg. The small backlog difference for the unpressurized case and the other nominal cases is from the ATV delivering on average around 500 kg more propellant per flight. The ATV flights in the unpressurized case are able to deliver more propellant since the shuttle flights are all pressurized and carry morecargo allowing the ATV average pressurized cargo load to decrease. There is an increase in the propellant backlog when one Progress flight per year is removed from the nominal case. With less progress flights, the propellant backlog goes from 3873 kg to5604 kg. When considered over the life of the model and distributed across the flights that carry propellant the increase is relatively small. The main reason for such a small backlog in the reduced Progress case is because several iterations were executed for this model, which included adjusting the flight schedule to allow ATVs to remain attached to the ISS for longer periods of time. This facilitates increased use of the ATV propellant for ISS reboost and attitude control. Based on the analysis performed for the reduced

Progress case, it was apparent that similar techniques could be employed in the other nominal cases to mitigate the smaller propellant backlog for those cases.

While none of the nominal cases met the propellant reserve requirement throughout the 15-year model, it is believed that the requirement can be satisfied by shifting flights and rearranging the schedule. The DAC 8 TM has a propellant backlog of 4112 kg, which is in the same range and in most cases higher than the backlog for the nominal cases. Since the DAC 8 TM satisfies the propellant reserve requirement, it is not unreasonable to assume that the nominal cases can satisfy the requirement with approximately the same amount of propellant.

For most of the nominal cases, the only cargo item other than propellant that is in the backlog at the end of the model is water. Most of the nominal cases have around 2500 kg of water backlog. Currently, the traffic model tool is configured so that only the HTV can carry resupply water to the station in tanks and the only water the shuttle can carry is the water generated from fuel cells. By allowing other vehicles to deliver water, the backlog could easily be eliminated over the course of the model. This conclusion is evident by the fact that the nominal case, with less Progress flights, does not have a water backlog. While there is no drastic direct effect on the loading of water, scrubbing the Progress flights results in a change to the manifesting sequence and the water backlog was eliminated. The minimum and maximum cargo cases do not have a water backlog problem since there are additional HTV flights that are able to deliver the water.

The only AAS case that has a significant amount of total backlog is the nominal case with an all unpressurized AAS vehicle (TM 6). The composition of the TM 6 backlog is shown in Figure 6-14. The total backlog for this case is 37,714 kg. The majority of the backlog is pressurized cargo. Other than the propellant and water backlog that occur in all the nominal cases, the only other notable backlog cargo is RS gas.

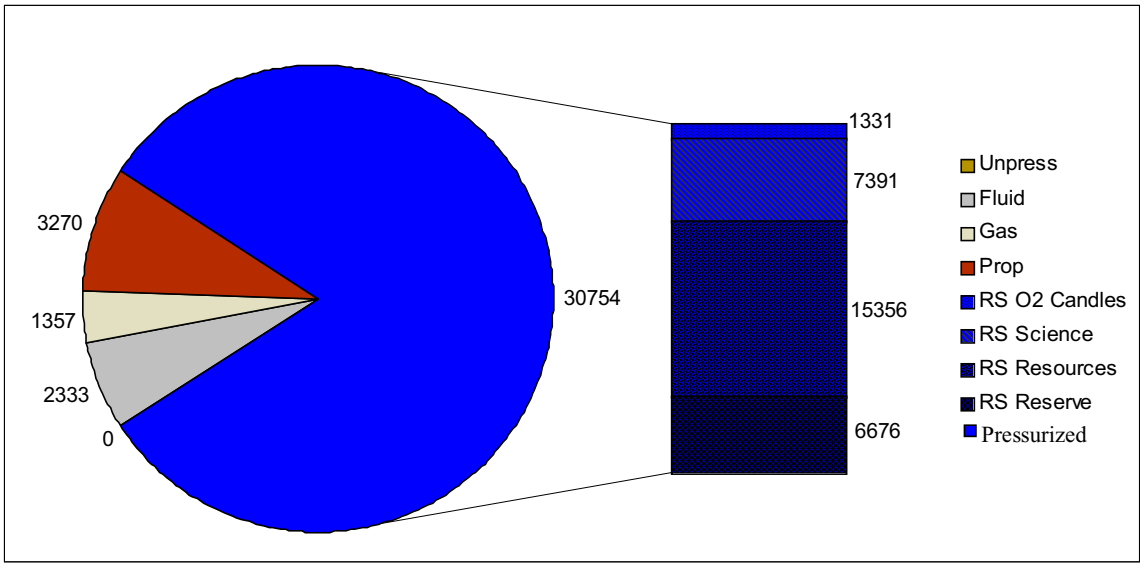

Figure 6-14 Cargo Delivery Backlog for the Nominal Case with Unpressurized AAS

All the shuttle flights in this model were assumed to deliver pressurized cargo only. Despite this increase in pressurized delivery capability over the other models, without the AAS capability to carry pressurized cargo, the pressurized cargo backlog at the end of the model is on the same order of magnitude as the DAC 8 TM. The backlog is not lowered considerably with the addition of an all unpressurized AAS. The AAS only helps make up for the scrubbed IP flights and the removed shuttle flights.

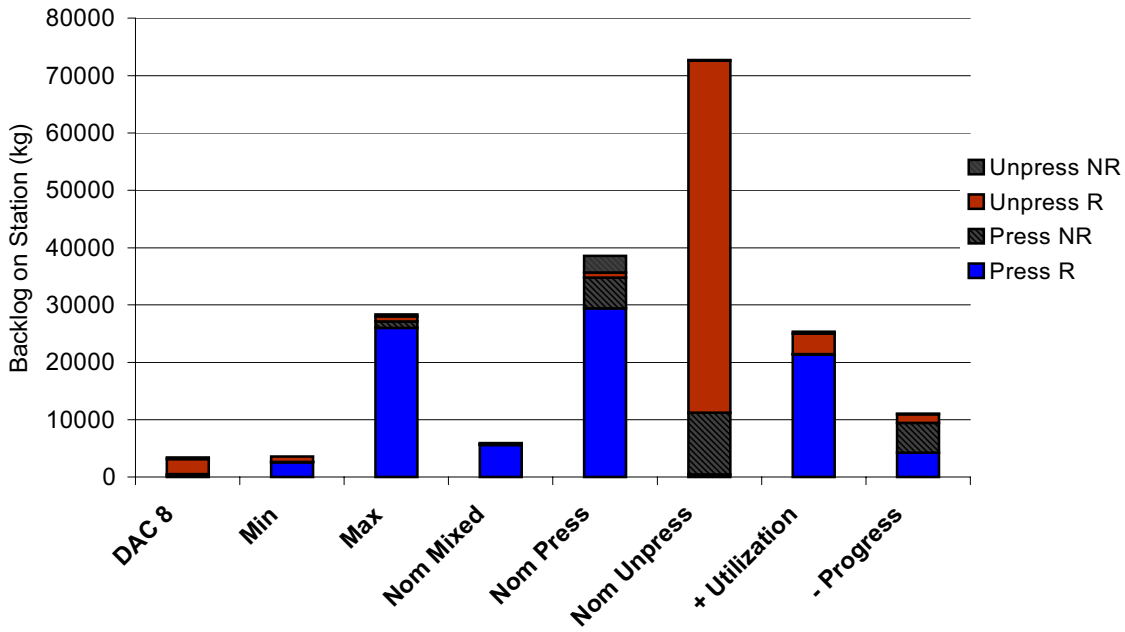

Mass of cargo only, accommodation unit mass is not included

Figure 6-15 Comparison of Return Cargo Backlog between Cases

Figure 6-15 shows the return cargo backlog at the end of each model with the DAC 8 TM included for comparison. It is important to note that in the DAC 8 TM, several iterations were performed to mitigate the initial model return cargo backlog. This is accomplished primarily by manifesting empty cargo accommodations on flights that have delivery performance margin so that additional cargo can be returned. Time limitations prevented multiple iterations of the TMs in this study but it is believed that these techniques could be employed to significantly reduce the model return backlog.

A general comparison of the cases may still provide some useful insight. For example, both the minimum cargo case and nominal mixed cargo AAS case approximate the return cargo backlog in the DAC 8 TM without an attempt to adjust the model for increased return cargo.

Comparison between the return cargo backlogs for the nominal cases shows what one would expect. In most cases, the largest backlog constituent is pressurized recoverable cargo. The shuttle is the only vehicle that can accommodate recoverable cargo in the model and in most cases the shuttle flights are mixed cargo or unpressurized cargo. There is relatively little carrier capability to return pressurized recoverable cargo. In the unpressurized AAS case, the noticeable decrease in the backlog of pressurized recoverable cargo is a result of all shuttle flights being modeled pressurized cargo

flights to offset the all unpressurized AAS. There is a dramatic increase in the unpressurized recoverable return cargo because without the unpressurized accommodations manifested on the shuttle, no vehicle can return recoverable unpressurized cargo.

The pressurized ASS case has a large increase in the amount of unpressurized non-recoverable return cargo backlog as a result of removing the unpressurized capability from the AAS. There is also a substantial jump in the pressurized return cargo backlog. This is due to the pressurized AAS case using 3 mixed shuttle flights and 1 unpressurized shuttle flight per year as opposed to the all mixed shuttle flights that most of the other cases use. With one less shuttle able to return recoverable pressurized cargo per year, the backlog increases over the course of the model. The maximum cargo AAS case also uses unpressurized shuttle flights and the recoverable pressurized backlog is consistent with the pressurized AAS case. The maximum AAS case pressurized recoverable backlog is a little lower than the pressurized AAS case since the nominal pressurized AAS case removes 1 shuttle flight every 3 years.

The amount of pressurized recoverable return cargo backlog for the case with increased utilization is double the backlog for the nominal case with mixed cargo or pressurized AAS vehicles. Increasing the utilization by 30% a year adds over 35,000 kg of pressurized recoverable cargo delivered to the station on the AAS flights. The difference in the pressurized recoverable backlog between the nominal case and the increased utilization case is around 37,000 kg. With increased pressurized recoverable cargo delivered to the station and maintaining the same level of pressurized recoverable return capability on the shuttle, it is expected that the backlog will increase by approximately the amount of the increased cargo delivered. Based on an assessment of the recoverable return cargo backlog for all cases analyzed, a DRM was added to the AAS Performance Requirements Document for the return of 2600 kg/year of pressurized recoverable cargo.

7.0 SUMMARY

The Traffic Model analyses performed for this study indicate that the addition of an AAS vehicle can effectively complement the existing ISS logistics vehicles to meet the ISS resupply/return requirements for an assembly complete ISS with a crew of seven. Based on a previous analysis performed by the ISS Program Office, additional resupply vehicles are not required for a three-person crew barring a significant reduction in the flight rate of existing vehicles.

This analysis provided bounding performance characteristics required of an AAS vehicle for defined minimum cargo and maximum cargo scenarios. In addition to the bounding cases, several variations of a defined nominal scenario were analyzed to provide additional insight to the AAS performance requirements. These analyses indicate that an AAS which can deliver on average 2000 to 3000 kg of mixed or pressurized cargo and as a maximum 3000 to 3800 kg of mixed or pressurized cargo with a flight rate of 5 flights per year can meet the ISS resupply requirements when used in conjunction with existing resupply vehicles. A similar return capability is required to meet ISS return requirements. A recoverable pressurized return cargo capability of approximately 2600 kg per year would provide flexibility in recoverable cargo return that would ensure ISS recoverable cargo requirements could be met. It might be possible to meet return recoverable cargo requirements without an AAS recoverable cargo capability but further analysis would be required to confirm this. Based on this analysis, an all unpressurized AAS is not an effective vehicle to meet the assumed ISS resupply/return requirements. However, if more than one vehicle type is added to the existing fleet, some combination of all pressurized vehicles with all unpressurized vehicles may be an effective solution. Detailed results of all TM analyses performed for this study are included in the appendices. AAS DRMs based on these analyses are documented in the AAS Performance Requirements document.

8.0 ACRONYMS

AAS	Alternate Access to Station
ATV	Automated Transfer Vehicle
CR	Change Request
CRV	Crew Return Vehicle
CSA	Canadian Space Agency
DAC	Design Analysis Cycle
DRM	Design Reference Mission
ESA	European Space Agency
HTV	H-II Transfer Vehicle
ISS	International Space Station
kg	kilograms
km	kilometers
m^3	cubic meters
MPLM	Multi-Purpose Logistics Module
MTBF	Mean Time Between Failures
NASA	National Aeronautics and Space Administration
NASDA	National Space Development Agency of Japan
NR	Non-recoverable
ORU	Orbital Replacement Unit
OZ	ISS Payload Office Mail Code
R	Recoverable
RS	Russian Segment
SFOC	Solid Fuel Oxygen Canisters
SM	Service Module
TBD	To Be Determined
TM	Traffic Model
ULC	Unpressurized Logistics Carrier
US	United States
USOS	United States On-orbit Segment

APPENDIX I
SPACE STATION BODY COORDINATE SYSTEM

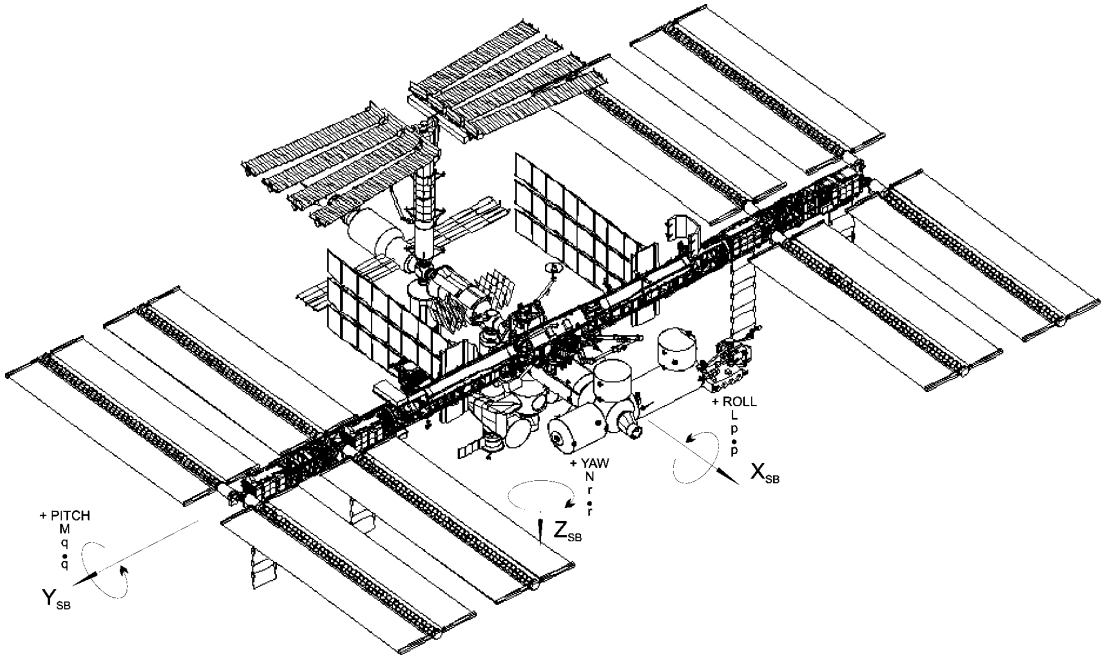

NAME:	Space Station Body Coordinate System
TYPE:	Right-handed Cartesian system, Body-Fixed
DESCRIPTION:	When defining the relationship between this coordinate system and another, the Euler angle sequence to be used is a yaw, pitch, roll sequence around the Z_{SB}, Y_{SB}, X_{SB} axes, respectively.
ORIGIN:	The origin is located at the Space Station center of mass.
ORIENTATION:	The X_{SB} is parallel to the X_A axis. Positive X_{SB} is in the forward flight direction.
	The Y_{SB} axis is parallel to the Y_A. Positive Y_{SB} is toward starboard.
	The Z_{SB} axis is parallel with the Z_A. Positive Z_{SB} is approximately toward nadir and completes the right-handed system, X_{SB}, Y_{SB}, and Z_{SB}.
	L, M, N: Moments about X_{SB}, Y_{SB}, and $Z_{SB,}$ respectively.
	P, q, r: Body rates about X_{SB}, Y_{SB}, and $Z_{SB,}$ respectively.
	$\dot{p}$, $\dot{q}$, $\dot{r}$: Angular body acceleration about X_{SB}, Y_{SB}, and $Z_{SB,}$ respectively.
SUBSCRIPT:	Station Body (SB)

APPENDIX J
ORBITER COORDINATE SYSTEM

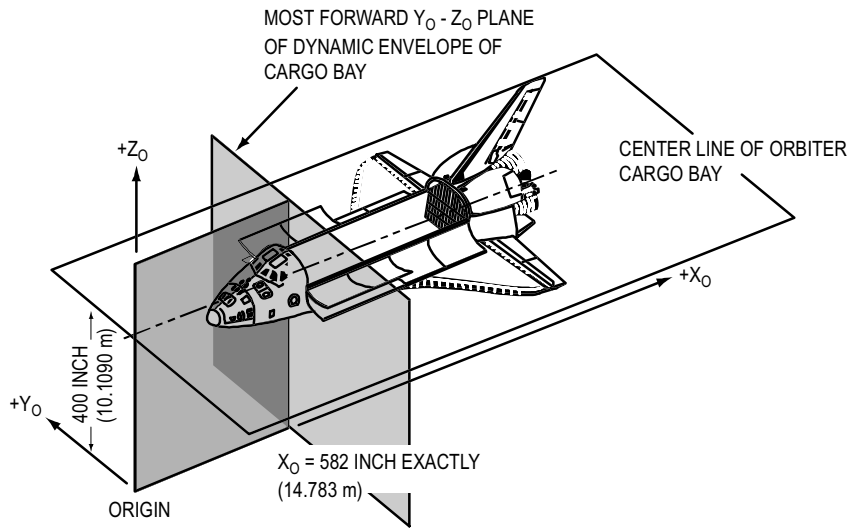

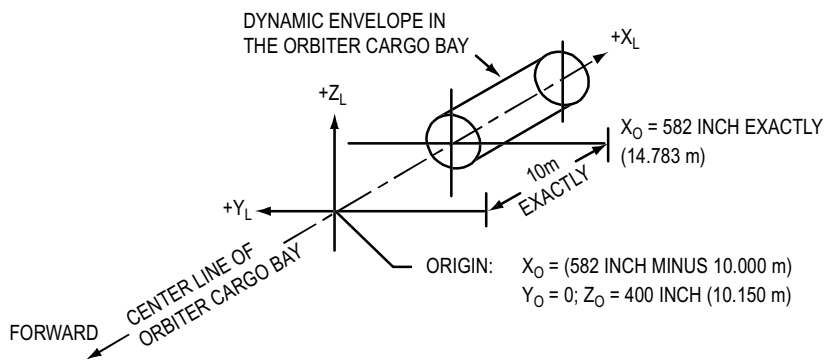

NAME:	Orbiter Coordinate System
TYPE:	Right Handed Cartesian coordinate system.
DESCRIPTION:	The standard coordinate designation is$_o$ (e.g., X_o, Y_o, Z_o)
ORIGIN:	In the Orbiter plane of symmetry, 400 inches below the centerline of the payload bay and at Orbiter X Station = 0.
ORIENTATION:	The X_o axis is the vehicle plane of symmetry, parallel to and 400 inches below the payload bay centerline. Positive sense is from the nose of the vehicle toward the tail.
	The Z_o axis is in the vehicle plane of symmetry, perpendicular to the X_o axis, and positive upward in the landing attitude.
	The Y_o axis completes a right-handed system.

APPENDIX K
AAS VEHICLE PERFORMANCE REQUIREMENTS DOCUMENT

This document can be found under separate cover as USA004882: Alternate Access to Station (AAS) Performance Requirements Document, International Space Station, dated February 15, 2002.

APPENDIX L
AAS VEHICLE PERFORMANCE REQUIREMENTS TRACEABILITY MATRIX

AAS Final Report Requirement	Referenced Section	Referenced Document
4.1		Alternate Access to Station (AAS) USA Project Work Plan Presentation
4.2	4.3.1.1 4.3.1.2 4.3.1.3 4.3.1.6 3.1.5.1	SSP 50261-01, Generic Groundrules, Requirements and Constraints, Part 1 SSP 50235, Interface Definition Document (IDD) for International Space Station (ISS) Visiting Vehicles (VVs)
4.3	3.1.1	SSP 50235, Interface Definition Document (IDD) for International Space Station (ISS) Visiting Vehicles (VVs)
4.4		Memo DM3-01-2 from OA/W. Gerstenmaier, ISS Recommendations for AAS Requirements
4.5	4.1.1 4.3.1.21	SSP 50235, Interface Definition Document (IDD) for International Space Station (ISS) Visiting Vehicles (VVs) SSP 50261-01, Generic Groundrules, Requirements and Constraints, Part 1
4.6		Alternate Access to Station (AAS) USA Project Work Plan Presentation
4.7		Alternate Access to Station (AAS) USA Project Work Plan Presentation
4.8	4.5.1	SSP 50235, Interface Definition Document (IDD) for International Space Station (ISS) Visiting Vehicles (VVs)
4.9	4.5.4	SSP 50235, Interface Definition Document (IDD) for International Space Station (ISS) Visiting Vehicles (VVs)

AAS Final Report Requirement	Referenced Section	Referenced Document
4.10	5.1.7.3	Alternate Access to Station (AAS) USA Project Work Plan Presentation SSP 50235, Interface Definition Document (IDD) for International Space Station (ISS) Visiting Vehicles (VVs) Memo DM3-01-2 from OA/W. Gerstenmaier, ISS Recommendations for AAS Requirements
4.11	3.1.5.2	SSP 50235, Interface Definition Document (IDD) for International Space Station (ISS) Visiting Vehicles (VVs)
4.12		Alternate Access to Station (AAS) USA Performance Requirements Document
4.13		USA004882, Alternate Access to Station (AAS) Performance Requirements Document
4.14		USA004882, Alternate Access to Station (AAS) Performance Requirements Document
4.15	4.2.2 3.7	SSP 50235, Interface Definition Document (IDD) for International Space Station (ISS) Visiting Vehicles (VVs) Memo DM3-01-2 from OA/W. Gerstenmaier, ISS Recommendations for AAS Requirements
4.16		ISS Configuration Document Alternate Access to Station (AAS) USA Project Work Plan Presentation
5.0		Alternate Access to Station (AAS) USA Project Work Plan Presentation
6.0	5.0 7.0 7.0 6.3	USA004882, Alternate Access to Station (AAS) Performance Requirements Document SSP 50200-06, Station Program Implemental Plan, Volume 6: Cargo Physical Processing SSP 57059, Standard Payload Integration Agreement for Pressurized Payloads SSP 57061, Standard Payload Integration Agreement for Unpressurized Payloads SSP 50520, International Space Station Logistics and Maintenance Operational Support

AAS Final Report Requirement	Referenced Section	Referenced Document
7.0		Alternate Access to Station (AAS) USA Project Work Plan Presentation TDS D8.1.1-04, Final - ISS Integrated Traffic Model Report (DAC 8)
8.0		Alternate Access to Station (AAS) USA Project Work Plan Presentation USA004882, Alternate Access to Station (AAS) Performance Requirements Document
8.1.6	3.3.4.1.1.3	SSP 50261-01, Generic Groundrules, Requirements and Constraints
8.1.10.3	3.7.1.5 3.7.1.6	SSP 50261-01, Generic Groundrules, Requirements and Constraints
8.1.11.1		SSP 57000, Pressurized Payloads Interface Requirements Document NSTS 21000-IDD-MDK, Shuttle Interface Definition Document for Middeck Payloads
8.2.1		SSP 41000, Systems Specification for the International Space Station
9.1	4.0	SSP 30219, Space Station Reference Coordinate Systems
9.2	3.5 3.1.2.1	SSP 50504, International Space Station Configuration Document SSP 50235, Interface Definition Document (IDD) for International Space Station (ISS) Visiting Vehicles (VVs)

AAS Final Report Requirement	Referenced Section	Referenced Document
9.2.1		SSP 41004, Common Berthing Mechanism to Pressurized Elements Interface Control Document NSTS 21000-IDD-ISS, International Space Station Interface Definition Document NSTS 07700, System Description and Data Design SSP 42004, Mobile Servicing System to User (Generic) Interface Control Document SSP 42003, Space Station Manned Base (SSMB) to Mobile Servicing System (MSS) Interface Control Document SSP 42007, United States On-orbit Segment to Italian Min-Pressurized Logistics Module Interface Control Document SSP 41142, Space Station Program Node Elements to Cupola Element Interface Control Document, Part 1 SSP 52051, User Electric Power Specifications and Standards MIL-STD-1553B, Command and Data Handling Interface
9.2.2		NSTS 21000-IDD-ISS, International Space Station Interface Definition Document JSC-26938, Procurement Specification for the Androgynous Peripheral Docking System for International Space Station Mission
9.2.3		SSP 50228, Vol. 15, Space Station Program Configuration and Assembly Standard Interface Control Document – Grapple Fixture Location ICD NSTS 07700, System Description and Data Design NSTS 21000-IDD-ISS, International Space Station Interface Definition Document

AAS Final Report Requirement	Referenced Section	Referenced Document
9.2.4		SSP 42131, Space Station Program Integrated Truss Segments P3 and S3 to Attached Payloads and Unpressurized Cargo Carriers (UCC) Standard Interface Control Document SSP 57003, Attach Payload Interface Requirements Document SSP 57004, Attach Payload Hardware Interface Control Document Template
9.2.5		D684-11232-01, Certification and Acceptance Requirements Document Enhanced Universal Trunnion Attachment System (EUTAS) – Active D684-11354-01, Certification and Acceptance Requirements Document Enhanced Universal Trunnion Attachment System (EUTAS) – Passive Kit
9.3.1.1		JSC-39233, Interface Definition Document for the International Space Station Cargo Transfer Bag (CTB) JSC-28169, Interface Control Document for the International Space Station Resupply Stowage Platform 1 Stowage System to Cargo Providers SSP 50467, ISS Cargo Stowage Technical Manual – Pressurized Volumes
9.3.1.2		NSTS 21000-IDD-MDK, Shuttle Interface Definition Document for Middeck Payloads
9.3.2		D684-10822-01, Standard Interface Definition Document (SIDD) for the Flight Releasable Attachment Mechanism (FRAM)
9.4.1		SSP 41000, Systems Specification for the International Space Station SSP 50005, International Space Station Flight Crew Integration Standard

AAS Final Report Requirement	Referenced Section	Referenced Document
9.4.2		SSP 42004, Mobile Servicing System to User (Generic) Interface Control Document D683-96059-01, Small Adapter Plate Interface Definition Document D684-10822-01, Standard Interface Definition Document (SIDD) for the Flight Releasable Attachment Mechanism (FRAM) SSP 30256, Extravehicular Activity (EVA) Standard Interface Control Document SSP 50005, International Space Station Flight Crew Integration Standard
9.5		SSP 50021, Safety Requirements Document SSP 50005, International Space Station Flight Crew Integration Standard

APPENDIX M
RESPONSE PERIOD LOGIC PATH

This report shows the preliminary results of the ISSP study concluding that a quick response vehicle would not be necessary.

Summary of AAS Rapid Response Process Model and Decision Tree

AAS Rapid Response is the concept for the expedited delivery to the International Space Station of material or components needed to prevent station abandonment using AAS vehicles. The concept is that an AAS launch vehicle provider will deliver to ISS any needed cargo on a timeline that is much shorter than normal scheduled logistic missions. A rapid response time of 14 days has been proposed. During the development of AAS requirements, neither ISS Operations nor Utilization could identify any credible failure scenario for which a Rapid Response requirement would be needed.

While determining if the rapid response capability is required, a process model and associated logic tree describing the rapid response capability was started. The process model developed could identify the launch vehicle response time, beginning with a direction to the initiation of the rapid response until the cargo is delivered at ISS, necessary to satisfy a given failure scenario and the specific failed hardware.

The Rapid Response model divided response times into 3 categories: immediate response (0 to 1 day) which was shorter than could be provided by any vehicle; Rapid Response (1-30 days) and normal schedule logistic delivery times (30 or 90 days, depending on launch vehicle and cargo class). In the time frame envisioned for AAS support, the ISS will be capable of handling all system failures and can continue with safe operation, except for the most catastrophic of failures. Catastrophic failures (fire, loss of pressure) resulting in the crew abandoning the ISS are assumed to occur suddenly, and a rapid response capability will not help under these circumstances. For all other credible failures, the built in redundancies, onboard spares, and cannibalization strategies preclude the need for a rapid response delivery. Normal logistic delivery times were judged to be sufficient.

This model and logic tree can still be used to calculate the response time requirement for a given cargo type should a future requirement for Rapid Response be developed. The model describes the process from the first failure to the restoration of the affected system. When a failure occurs, the crew and ISS ground support team must identify the failure, isolate the cause, and make the decision to initiate a rapid response. Once the decision to initiate a rapid response is made the AAS provider has three critical process paths to perform. These paths include all the mission planning and analysis needed to deliver cargo to ISS; the processing of the launch vehicle and launch facility; and finally, the processing of the cargo. The cargo process includes an ISS internal process required to prepare the needed cargo for pick up by the AAS launch provider. The AAS launch provider is responsible for the rest of the cargo process, transporting the cargo to launch site, integrating the cargo in with other cargo, and loading the cargo

onto the launch vehicle. The AAS timeline is also modeled with a final launch sequence and flight time to the ISS. Rapid response time was measured from initiation of the rapid response option to the delivery of the cargo to ISS. To complete the model, the internal ISS process of de-stowing the cargo and repairing the failure is included to ensure cargo delivery occurs in time to avoid operation degradation, up to and including, abandonment of ISS.

The model also differentiates between the initiation of a new mission and the remanifesting of a mission of a AAS launch vehicle already in flow. Each class of cargo (differentiated first by unpressurized versus pressurized and then by the carrier or packing strategy used) and each launch vehicle has a normal mission manifest freeze point. If a rapid response call is made after a mission has progressed along the process schedule passed the manifest freeze point, the rapid response process must include time to back the vehicle-cargo stack back to the point where the cargo can be changed, and the mission can be restarted.

The determination that rapid response capability is not a necessary addition to AAS requirements was made based on the assumption that nominal logistics delivery schedules will support ISS Operational and Utilization needs after station assembly. The assumption that any cargo can be added to the next launch without significant launch delays may not always be valid. The model defines any call for remanifesting after the cargo freeze point as a form of rapid response. The rapid response model indicates that much work is still required for current and future logistic vehicles to ensure that nominal logistic timelines support late remanifesting of highly desirable cargo. Current manifest freeze points for some cargo classes will require waiting additional launch cycles to prevent inducing non-standard work and potential launch delays. The model developed to explore rapid response capability also can be used to define requirements for when highly desirable cargo can reach the ISS using logistical processes other than AAS.

APPENDIX N
UNITED SPACE ALLIANCE STATUS REVIEW CHARTS

The following charts are included in the appendix: Workplan Review, Midterm Review, Interim Review, and Final Review.

Alternate Access to Station (AAS)
USA Project Work Plan

Presentation to MSFC

11/15/01

United Space Alliance

Agenda

- Schedule Highlights
- USA Team and Support Contractors
- Study Assumptions
- Study Process
- Draft Cargo Matrix
- Draft Traffic Model Options
- Detailed Schedule
- Deliveries for December 3
- Mid–Term Plan
- Issues

Schedule Highlights

- ATP – 10/26
- Booze Allen Hamilton Task Order – 11/5
- Space America under contract – 11/14
- Project Work Plan Review – 11/15 (@ MSFC)
- Early Delivery – 12/3
- Mid-Term Review – 12/13 (@ JSC)
- Status Review – 1/10/02 (@ MSFC)
- Final Review – 2/7/02 (@ MSFC)

USA Team and Support Contractors

Team Member	Functional Area
Ron Pechacek	Team Lead/ISS Program Integration
Les Sorge	VIPeR
Rob Alexander	VIPeR
Andy Evans	Logistics & Maintenance
Derek Dumas	Logistics & Maintenance
John Selmarten	ISS Payloads
Kristen Rodda	ISS Payloads
Joel Sills	External Carriers
Bryan Janda	Mission Ops / Stowage
Paul Lane	Mission Ops / Visiting Vehicle
Steve Wright	BAH / Traffic Model
Gary Brown	BAH / Traffic Model
Chris Barker	SA / Code U & Micro G Research
Jim Collins	Program Integration
Alan DeLuna	Program Integration

Study Assumptions

- AAS orbital element is unmanned
- The post assembly complete configuration of the ISS will reflect the Rev. F baseline (e.g. CAM, Node 3, CRV, and Hab) and IP elements
  - Potential major impacts to AAS if a module is eventually built for the selected docking port
  - ISS configuration will mainly impact Systems/maintenance and Utilization
- Traffic models will be developed for both a 3 person and a 7 person (4 USOS / 3 Russian) crew size
  - Crew size will mainly impact Systems/resupply and Utilization
- Traffic modeling will be based upon the DAC 8 TM Modified
  - 4 Shuttle Flights per year
    - 3 Pressurized Carriers
    - 1 Unpressurized Carriers
  - 4 Progress flights per year (Base)
  - 1 Less ATV or HTV or Progress per year (i.e. one of the IP carrier vehicle missions will not support the ISS each year)
- AAS IOC will be start of FY 06

Study Assumptions (cont.)

- Requirements for return cargo will be included in the study
- The ISS will provide resources to the AAS vehicle while docked (dependent on docking port)
- Nominal external cargo transfers are performed via EVR, not EVA
- Study will include the best available data for the Russian segment
- The vehicle will not deliver propellant to the ISS or provide attitude control or reboost of the ISS while docked
- Will use ISS Program standard definitions and nomenclature

Study Process

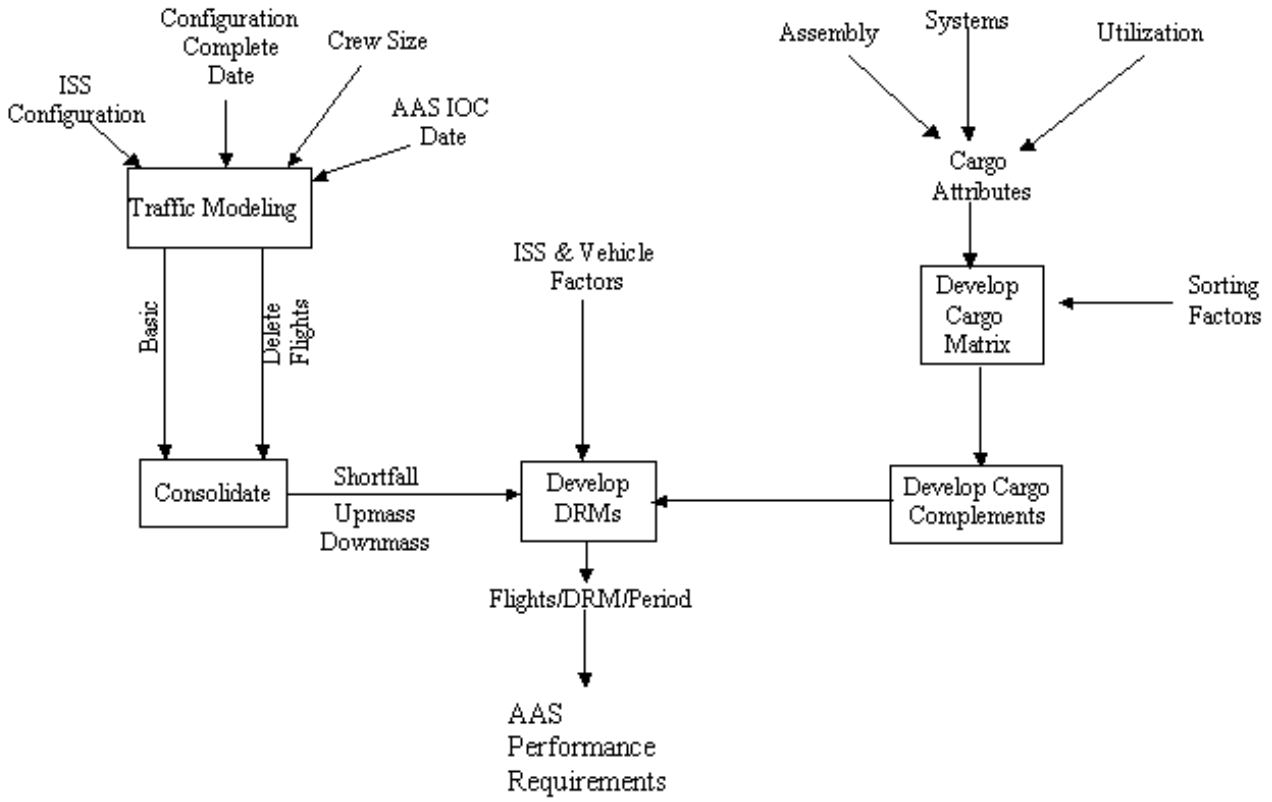

Draft Cargo Matrix

	Major Type	Minor Type	Total Mass (no packing factor)	Total Volume (no packing factor)	length (external only)	width (external only)	height (external only)	OR Bag Size	Subcarrier/RSE	Preferred Launch Location	On-Orbit Location	ES Transfer Method	ES Transfer Restrictions	Resources Required	Environ constraints - Relaunch, Pad, Ascent, Descent, Post descent	Ascent/Return Qualification Limits	Hazard Type	Criticality Level	Response Period	Transfer Location
Options	Assembly	resupply	lbs/kg	ft^3/m^3				1/2 CTB	FRAM	Internal	Internal	IVA	RS airlock	active			comprsd gas			KSC
	Systems	maintenance						1 CTB	Direct	external	external	EVA	Russian port	inta			batteries			JSC
	Utilization	CHeCS						2 CTB	Bag			EVR	APAS				biological			MSFC?
		etc.						3 CTB					Joint Airlock				chemical			Wallops?
								M1 Bag					CBM				Radioactive			
								M2 Bag												
								direct (lwh)												
								FRAM												
								EVA bag?												
Cargo																				

Draft Traffic Model Options

- Utilization of AAS in the following ISS delivery scenarios
  - All pressurized
  - All unpressurized
  - Combination of pressurized/unpressurized
  - Nitrogen/Oxygen/Water
  - Return capability
  - All passive
  - Passive/Active combinations

Detailed Schedule

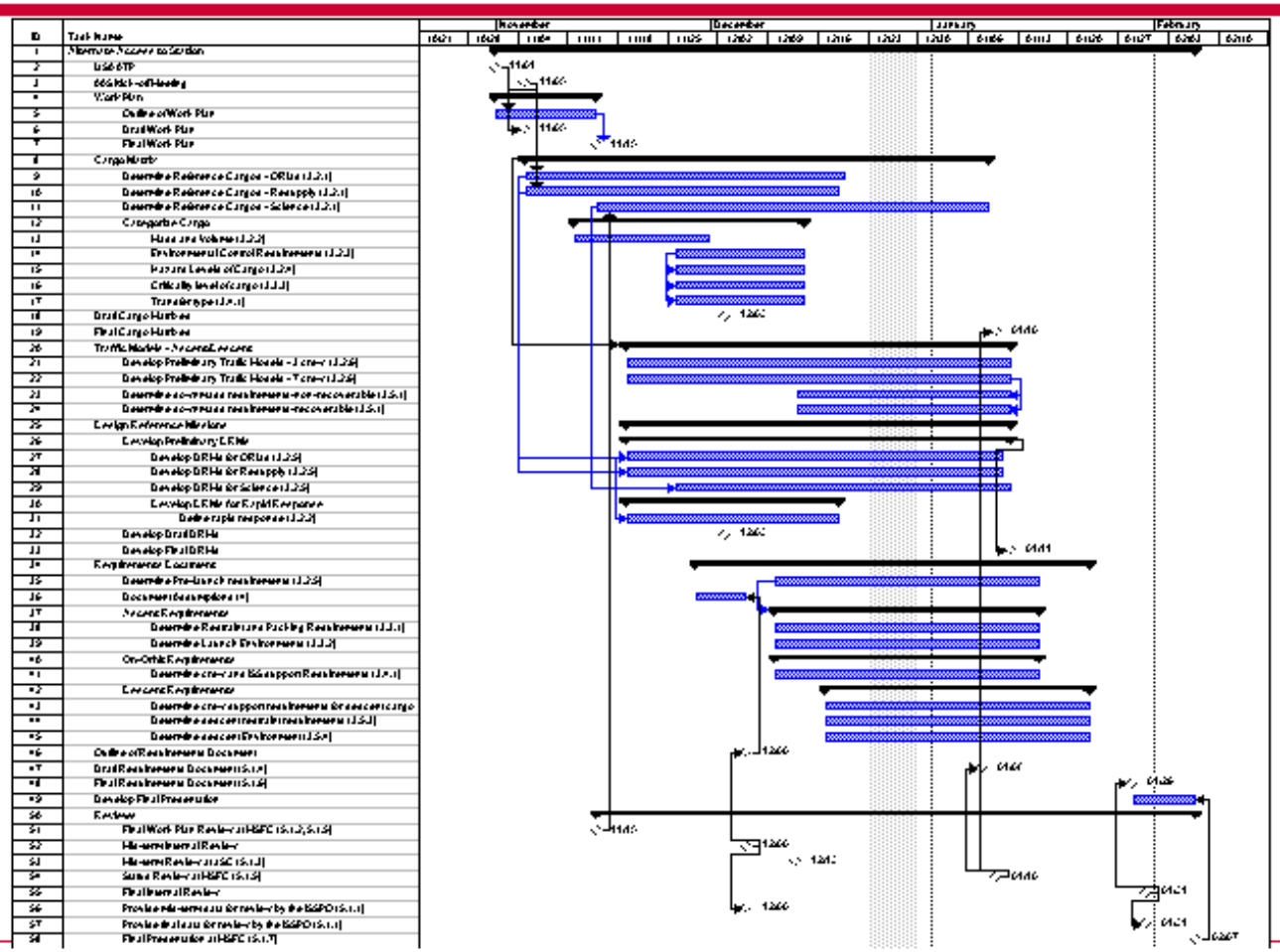

Deliveries for December 3

- Preliminary DRM Matrix (Partial)
  - Cargo Major Type
  - Cargo Minor Type
  - Reference ID
  - Carrier Type
  - Total Mass
  - Total Volume
  - Response Period
- Draft Cargo Matrix

Mid-term Plan

- Interim AAS Performance Requirement Document
  - Format
  - Sample data
- Review supporting material
- Updated assumptions
- Current issues

Issues

- ISS resources available to AAS
- No propellant delivery ground rule
- No APAS docking ground rule
- ISS attach time
- Berth at SSRMS or JEM RMS
- ATV and HTV availability date

BACK-UP

Cargo Matrix Definitions

ITEM	DEFINITION
Cargo - Major Type	Assembly, Systems, or Utilization
Cargo - Minor Type	Maintenance, Resupply, CHeCS, Ancillary Hardware, etc
Total Mass	Total cargo mass (lbs/kg), not including packing factor. Total mass with packing factors will be calculated for the final delivery
Total Volume	Total cargo volume (ft^3/m^3) not including packing factor. Total volume with packing factors will be calculated for the final delivery
Lengh	For external or direct mount cargo only (ft^3/m^3)
Width	For external or direct mount cargo only (ft^3/m^3)
Height	For external or direct mount cargo only (ft^3/m^3)
or Bag Size	Use ISS standard cargo accommodations, i.e. Cargo Transfer Bags (CTB), 1 CTB Equivalent (CTBE) = 1.86 ft^3 / .053 m^3
Subcarrier/FSE	Flight Support Equipment (FSE)
Preferred Launch Location	Suggested location of cargo for launch, either internal or external
On-Orbit Location	Installed location of hardware on-orbit, either internal or external
ISS Transfer Method	Internal Vehicular Activity (IVA), External Vehicular Activity (EVA), External Vehicular Robotic Activity (EVR)
ISS Transfer Restrictions	APAS, Common Berthing Mechanism (CBM), Russian port, Joint Airlock, Russian Airlock
Resources Required	On launch pad, during ascent/descent. Active includes power requirements, cooling requirements, etc.
Environmental Constraints	
Ascent/Return Qualification Limits	ex: meets Shuttle/Progress Qualification Limits
Hazard Type	Compressed gas, batteries, biological, chemical, radioactive
Criticality Level	For Mission Success, as defined in SSP 30223 Problem Reporting and corrective Action (PRACA) for the ISS
Response Period	
Transfer Location	Where cargo will be turned over to AAS program, will be within US (ex: KSC, JSC, MSFC?, Wallops?)

Draft DRM Matrix

DRM ID	AAS 1	AAS 2	AAS 3	AAS 4	AAS 5	AAS 6	AAS 7	AAS 8
Cargo - Major Type	Systems/Maintenance			Systems/Resupply			Utilization	
Cargo - Minor Type	Preposition Crit Spare	Nominal PM	Launch on Need	Photo/TV	Foodstuffs	Consumables	Hardware	Consumables
Description								
Carrier Type								
Subcarrier/FSE								
Total Mass								
Total Volume								
Mass Increment								
Volume Increment								
Increment Packing Method								
Increment Restraint Reqs								
ISS Transfer Method								
ISS Transfer Restrictions								
Carrier Attach Site								
Carrier Attach Hardware								
ISS Resources Available								
ISS Attach period								
Cargo Environ constraints								
Ground								
Launch Pad								
Ascent								
Pre-transfer								
Cargo Ascent Qualification Limits								
Cargo Hazard Level								
Cargo Criticality Level								
Response Period								
ID to Cargo available								
ID to at ISS								
Cargo Transfer Location								
Service Provider Cargo Processing								
Flights per Period								

Draft DRM Matrix Definitions

ITEM	DEFINITION
DRM ID	Arbitrary identification of DRM
Cargo - Major Type	ORUs, Experiments, ISS System Consumables, Crew Rotation Provisions, Crew Food, Ancillary Hardware, etc
Cargo - Minor Type	Breakdown of the Major Type e.g.: Planned replacement, Quick Response, Well Goods, etc
Description	Text description of the DRM
Carrier Type	Pressurized, unpressurized, exposed cargo, etc.
Subcarrier/FSE	ISS supplied sub-carriers e.g. RSR, RSP, Express, etc.
Total Mass	Total cargo mass including ISS provided packing
Total Volume	Total cargo volume including ISS provided packing
Mass Increment	The mass of a packed increment. The total cargo is generally composed of multiple increments.
Volume Increment	The volume of a packed increment. The total cargo is generally composed of multiple increments.
Increment Packing Method	How is the increment packed e.g.: In foam, In CTBs, attached to FRAMs, etc.
Increment Restraint Reqs	How must the packed increments be restrained within/on the carrier/sub-carrier (e.g. straps, bungee, hard mounted in an orientation) and how must the cargo be protected from increment to increment loads (e.g. CTBs assembled to MLE and MLEs protected from e
ISS Transfer Method	Crew through the hatch, EVA, SSRMS, etc
ISS Transfer Restrictions	How big is the hatch, what grapple fixtures are required, etc
Carrier Attach Site	Where does the carrier attach to the ISS
Carrier Attach Hardware	The attachment hardware required on the carrier (not ISS supplied).
ISS Resources Available	The ISS resources available to the carrier at the berthing location (power, data, fluids, etc).
ISS Attach period	How long the carrier must remain attached to the ISS to complete cargo transfer and other activity.
Cargo Environ constraints	The support required by the cargo during different phases of the operation. This includes thermal limits, cleanliness, static, power support, data, etc.
Ground	
Launch Pad	
Ascent	
Pre-transfer	
Cargo Ascent Qualification Lim	Vibration/Acoustic, acceleration, etc.
Cargo Hazard Level	Corrosive fluids, propellants, compressed gasses, etc.
Cargo Criticality Level	What happens if the cargo does not get to ISS
Response Period	
ID to Cargo available	Time from when the mission is identified to when the cargo is transferred to the AAS service provider.
ID to at ISS	Time from when the mission is identified to when the cargo is required attached to the ISS.
Cargo Transfer Location	The location the AAS service provider receives the cargo.
Service Provider Cargo Proces	The processing that the AAS service provider must perform on the cargo.
Flights per Period	Average Flights per period for a specific DRM

Alternate Access to Station (AAS)
USA Midterm Review

Presentation at USA/Houston

12/13/01

United Space Alliance

Safety

1150 Gemini Evacuation Areas

Today's Plan

- AM Session – Midterm Presentation
- Lunch
- PM Session
  - Question and Answer
  - Detailed Discussions

Purpose

- Midterm Review of Study Status
  - Status and process to deliver products
- Review Products to Support Systems Concept RFO – Bounding Conditions
  - Rapid Response DRM
  - Minimum Case DRM
  - Maximum Case DRM
- Review AAS Requirements Document Outline
- Identify Forward Plan

Contents

- Safety
- Today's Plan
- Purpose
- Participants
- Schedule Highlights
- Budget Variance
- (AAS) Definitions
- General Assumptions
- Study Process
- Traffic Model
- Cargo Matrix
- Design Reference Missions (DRMs)
- AAS Requirements Document Outline
- Resolved Issues
- ISS Resources Available to AAS
- Open Issues
- No APAS Docking Ground Rule
- Traffic Models to Run
- Future Work
- Backup Information
- Detailed Schedule
- Traffic Model Parameters
- Cargo Density
- Cargo Matrix Definitions
- DRM Matrix Definitions
- Rapid Response Timeline
- FRAM Weight
- Comparison Data
- Grapple Hand-off Maneuver
- APAS Mechanisms
- CBM Mechanisms

Participants

USA Team	Functional Area
Ron Pechacek	Team Lead/ISS Program Integration
Les Sorge	ISS VIPeR
Rob Alexander	ISS VIPeR
Andy Evans	ISS Logistics & Maintenance
Derek Dumas	ISS Logistics & Maintenance
John Selmarten	ISS Payloads
Kristen Rodda	ISS Payloads
Joel Sills	ISS External Carriers
Bryan Janda	Mission Ops / Stowage
Paul Lane	Mission Ops / Visiting Vehicle
Steve Wright	BAH / Traffic Model
Gary Brown	BAH / Traffic Model
Chris Barker	SA / Code U & Micro G Research
Jim Collins	Program Integration
Erick Isely	KSC Program Integration
Alan DeLuna	Program Integration

NASA Team	Functional Area
Chris Crumbly	MSFC/AAS Office Manager
Jim Poe	MSFC/AAS Office Study Lead
Saroj Patel	MSFC/AAS Office JSC Representative
James Downey	MSFC/AAS Office Technical
Paul Hamby	MSFC/AAS Office Technical
John Schafer	KSC/AAS Office Technical
Jeff Arend	JSC/ISSPO System Intg & Analysis
Valin Thorn	JSC/ISSPO VIPeR
Mike Lutomski	JSC/ISSPO VIPeR

Schedule Highlights

- ATP – 10/26/01 (Complete)
- Booze Allen Hamilton Task Order – 11/5/01 (Complete)
- Space America under contract – 11/14/01 (Complete)
- Project Work Plan Review at MSFC – 11/15/01 (Complete)
- Midterm Review at JSC – 12/13/01 (Today)
- Status Review at MSFC – 1/10/02
- Final Review at MSFC – 2/7/02

AAS Work Plan

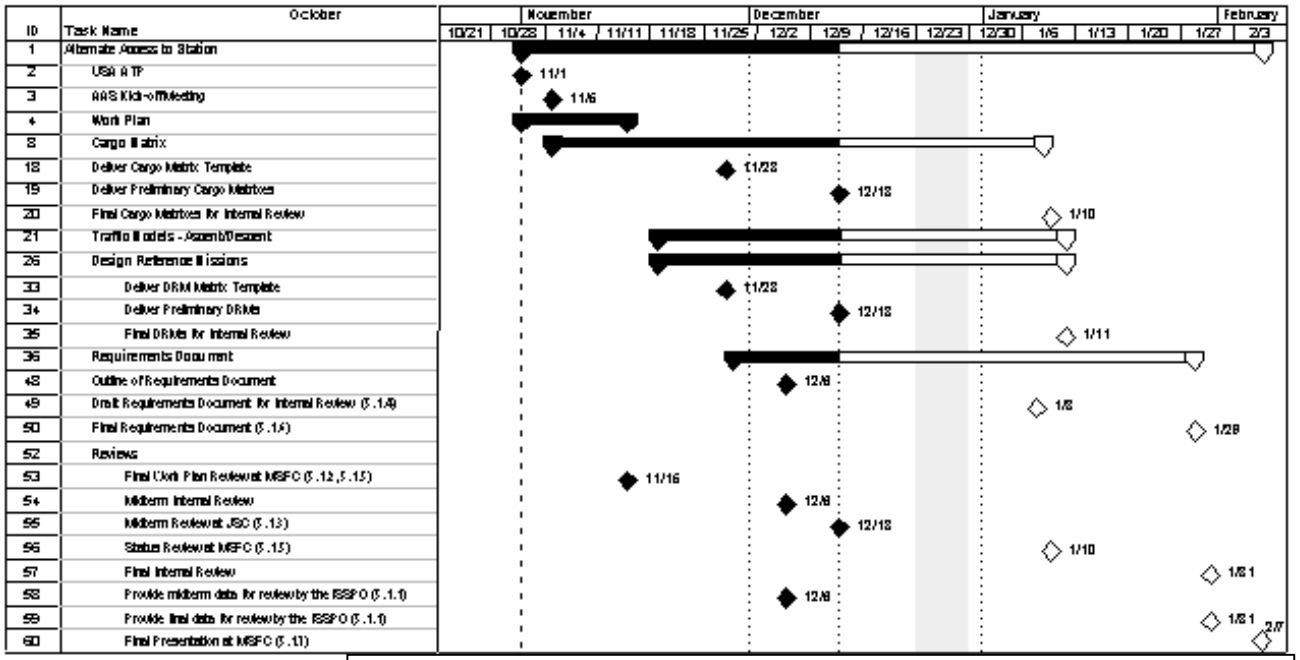

Budget data has been omitted.

Budget Variance

- Subcontractor actual costs not yet posted
  - All as planned
- Some travel expenditures not yet posted
  - All as planned
- USA labor under running projections
  - Straight line estimated not accounting for start-up ramp
  - Team delays due to ISS baseline uncertainty
  - Expect to close gap in January

Alternate Access to Station (AAS) Definitions

- Inconsistent definitions continue to cause confusion between space flight programs
- Some definitions in the AAS Statement of Work were not consistent with ISS definitions
  - Caused some confusion within the AAS working group
  - Redefined to be consistent with established ISS Program terminology and documentation
- Consistent definitions will reduce future confusion within the AAS - ISS Program

AAS Definitions

- Cargo: Equipment or supplies that are delivered to the ISS. Cargo falls into two category types, either Payloads or Systems.
- Payload(s): Equipment associated with research and experiments.
- Utilization: Synonymous with Payloads, sometimes used interchangeably.
- System(s): Equipment for logistics/resupply and maintenance of the ISS.

AAS Definitions

- **Packing Factors (Accommodations):** The additional mass and volume added to a cargo item once it has been packed for launch. (e.g., cushioning foam). Packing factors are determined by the launch vehicle configuration, and therefore are not included in the cargo matrix.
- **CTBE:** Cargo Transfer Bag Equivalent – Standard ISS nomenclature for pressurized cargo equivalent to 1.86 ft^3. It denotes cargo that has no specific launch requirements (i.e., any pressurized volume).
- **MLE:** Middeck Locker Equivalent – Standard ISS nomenclature for pressurized cargo equivalent to 2.03 ft^3. It denotes cargo that currently requires transport on the Shuttle middeck due to power/access requirements.
- **MDK:** Middeck Locker – Cargo that requires direct/hard mounting similar to the Shuttle middeck locker structure.

General Assumptions

- AAS orbital element is unmanned
- Traffic modeling will be based upon the DAC 8 Traffic Model
- The post assembly complete configuration of the ISS will reflect the Rev. F baseline
  - CAM, Node 3, CRV, Hab, and IP elements
  - Propellant Module is not part of the configuration
  - Potential major impacts to AAS if a module is eventually built for the selected docking port
  - ISS configuration will mainly impact Systems/maintenance and Utilization
  - 7 crew capable
- ISS Core refers to the IMCE core configuration – all truss elements, Node 2, Columbus, JEM, and CAM
- ISS Enhanced refers to the previous assembly complete configuration – ISS Core plus Node 3, CRV, and Hab module

General Assumptions (continued)

- ISS may provide resources to the AAS vehicle while docked (dependent on docking port)
  - Allocation levels are not addressed
- Nominal external cargo transfers are performed via Extravehicular Robotics (EVR), not Extravehicular Activity (EVA)
- Study will include best available data for Russian segment
- Vehicle will not deliver propellant to the ISS or provide attitude control or reboost of ISS while docked
- ISS Program standard definitions and nomenclature used
- Accepted ISS Program data will be used when available
- Additional assumptions specific to the traffic models will be addressed in that section

General Assumptions (concluded)

- Vehicle flight rate
  - 4 Shuttle flights per year
    - 1 additional flight every 3 years to replace the CRV for 7 crew cases
  - 4 Progress M1 flights per year
  - 2 HTV flights per year
  - 1 ATV flight per year

Study Process

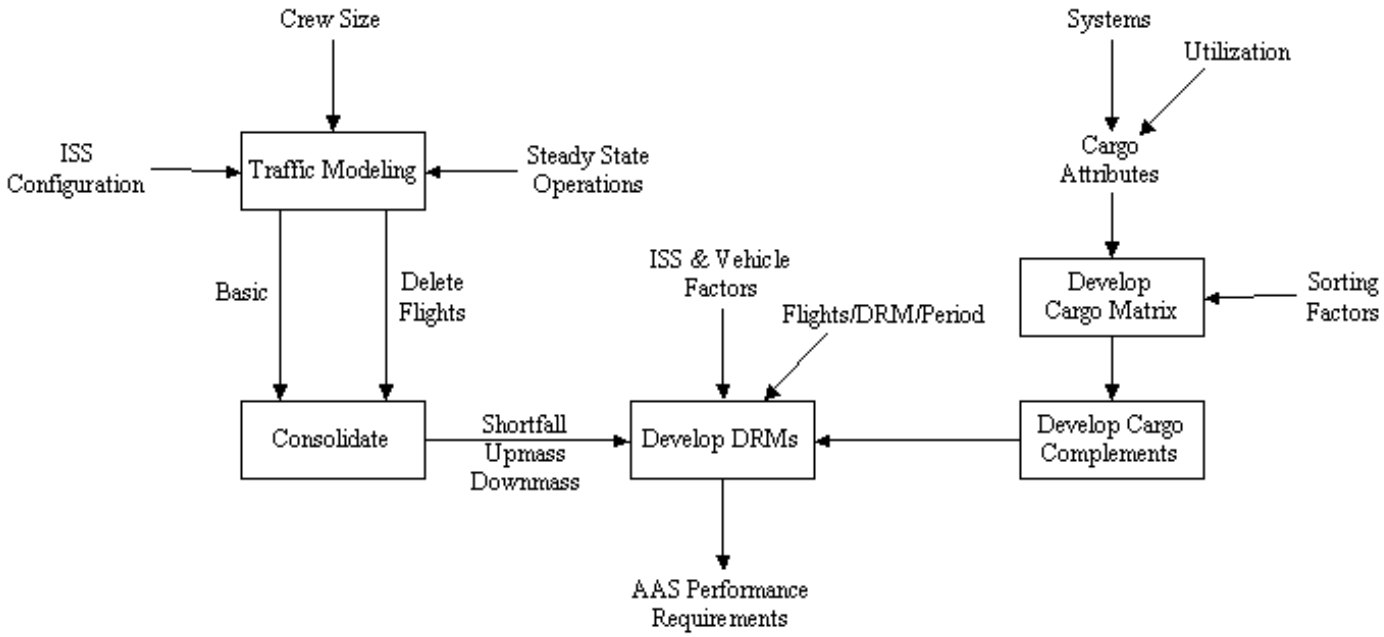

Traffic Model – General Assumptions

- The traffic model will not assume Shuttle reboost (consistent with DAC 8)
- External carrier properties are consistent with the estimates in DAC 8
- Focus on steady state operations for ISS and final ISS vehicle configuration
  - Decoupled the assembly configuration completion date and the IOC of the AAS vehicle
- Cargo return (recoverable, non-recoverable) requirements same as DAC 8
- ISS microgravity quiescent requirements will be satisfied

Traffic Model – Accommodations for AAS Vehicle

- Traffic model provides ISS cargo requirements
- Accommodations are added to account for foam and bags (pressurized) and cargo-mounted attach hardware (unpressurized)
  - Generic pressurized accommodations and cargo densities based on previous experience
    - 30% mass factor for accommodations (e.g., foam and bags)
    - 30% volume factor for accommodations (e.g., foam and bags)
    - 20 lbs/ft^3 average cargo /accommodations density
  - Generic unpressurized accommodation factors and cargo densities
    - 120% mass factor for accommodations (e.g., FRAM and adapter plate)
    - 18 lb/ft^3 average cargo density

Traffic Model – Utilization Requirement Determination

- Traffic model (DAC 8 basis) assumes utilization requirements as approximately 40% of the available upmass
  - 4 Shuttle flights per year and non-Russian IP utilization requirements
    - 8,170 kg per year average pressurized (without accommodations)
    - 3,390 kg per year average unpressurized (without accommodations)
  - Upmass (kg/year) changed based on the mix of vehicles in the model options
- Need fixed non-Russian utilization requirement
  - OZ/N. Penley provided the following inputs
    - 17,944 kg per year for utilization requirement
      - 14,724 kg pressurized (includes MPLM accommodation of 60% to account for RSR, RSPs)
      - 3,220 kg unpressurized (does not include accommodations)
    - An increase of 30-35% will eliminate upmass as the most limiting resource for utilization
  - Actual cargo requirements with no packing factor
    - 12,420 kg per year for utilization requirements
      - 9,200 kg per year for pressurized
      - 3,220 kg per year for unpressurized
    - 3,730 kg additional will eliminate upmass as the most limiting resource for utilization

Traffic Model – Initial Matrix

Crew Size	ISS Configuration					
	Core with IP vehicles	Core without IP vehicles	Accommodations for 6 with IP vehicle	Accommodations for 6 without IP vehicle	Enhanced with IP vehicles	Enhanced without IP vehicles
3	A – min cargo	C				
6			D	E		
7					F	B – max cargo

- **Traffic Model Matrix Assumptions**
  - IP vehicles include the Russian Progress, the ESA ATV, and the NASDA HTV
  - IP vehicles will be provided in all cases to meet minimum ISS propellant requirements
- **Cases not analyzed**
  - Core configuration cannot support a 6- or 7-person crew
  - Enhanced configuration assumes a CRV; therefore, the ISS will be fully utilized with a 7-person crew
  - The 6-person crew size will be bounded by the 7-person case. The 7-person case creates the maximum AAS demand

Traffic Model – Revised Matrix

Crew Size	ISS Configuration					
	Core with IP vehicles	Core without IP vehicles	Accommodations for 6 with IP vehicle	Accommodations for 6 without IP vehicle	Enhanced with IP vehicles	Enhanced without IP vehicles
3	A	C				
6			D	E		
7					F – min cargo	B – max cargo

- **Earlier Traffic Model Analysis found positive upmass margin with only a 3-person crew**
  - **Eliminated need to analyze DRM cases A and C from original DRM Matrix**
- **Revised Traffic Model Matrix to redefine the minimum cargo case**

Traffic Model – Minimum Cargo (Case F)

- Minimum cargo (Case F)
  - Apprx. 5,690 kg average annual cargo shortfall
    - 4,350 kg pressurized cargo
    - 1,340 kg unpressurized cargo
  - AAS vehicle requirements (cargo with accommodations) at 2 flights/year
    - 2,830 kg pressurized cargo
    - 1,470 kg unpressurized cargo
    - 170 CTBE pressurized volume
    - 80 ft^3 unpressurized volume
  - Maximum flight rate of 2 flights per year
    - Limited based on ISS micro-g quiescent period requirements
    - There is an existing problem for CBM cycles on the Node 2 Nadir
- Downmass
  - 0 kg of non-recoverable backlog assuming AAS has non-recoverable deorbit capability
  - Approx. 2,300 kg average annual backlog of recoverable, pressurized cargo

Traffic Model – Maximum Cargo (Case B)

- Maximum cargo (Case B)
  - Approx. 10,680 kg average annual cargo shortfall
    - 8,730 kg pressurized cargo
    - 1,950 kg unpressurized cargo
  - AAS vehicle requirements (cargo with accommodations) at 5 flights/year
    - 2,270 kg pressurized cargo
    - 860 kg unpressurized cargo
    - 130 CTBE pressurized volume
    - 45 ft^3 unpressurized volume
  - Maximum flight rate of 5 flights per year
    - Limited based on ISS micro-g quiescent period requirements
    - There is an existing problem for CBM cycles on the Node 2 Nadir
- Downmass
  - 0 kg of non-recoverable backlog assuming AAS has non-recoverable deorbit capability
  - Approx. 2,300 kg average annual backlog of recoverable, pressurized cargo

Traffic Model – Summary of Results

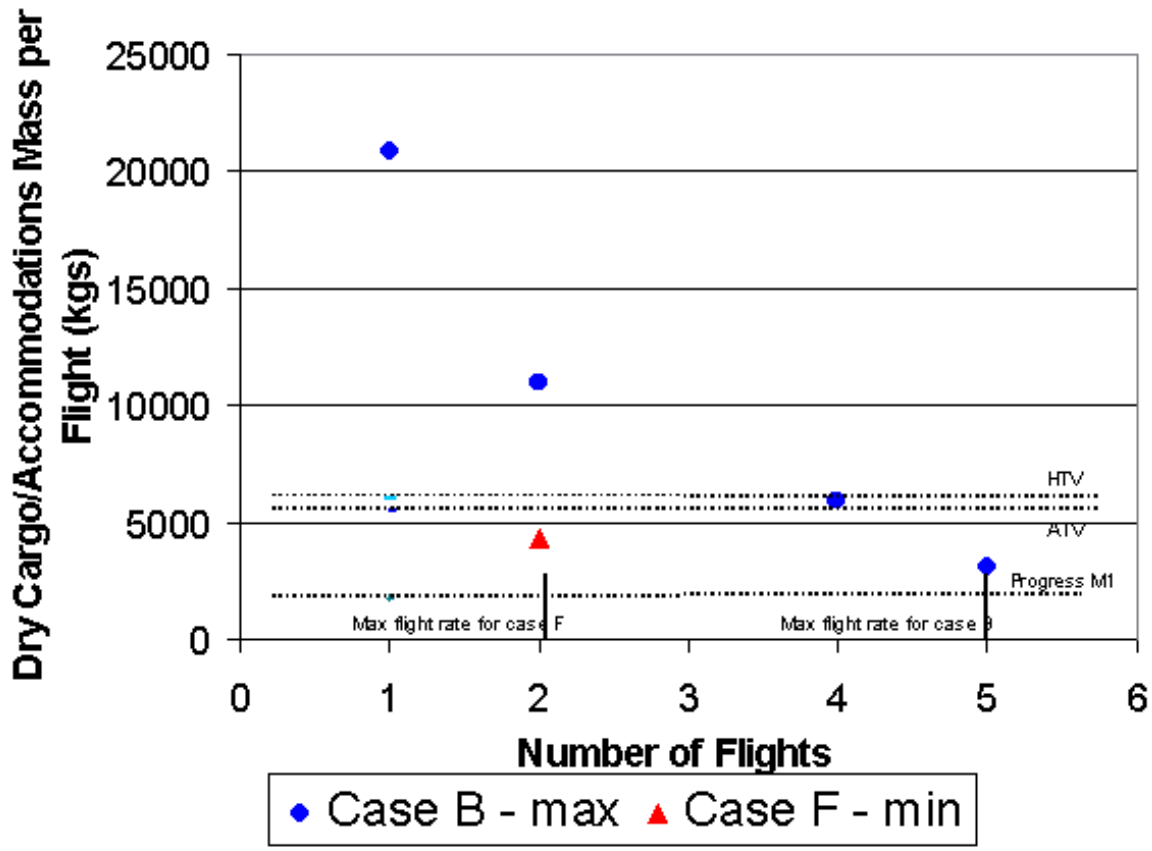

Cargo Matrix

Name	Major Type	Minor Type	Total Mass (no accomodations factor) lbs	Total Mass (no accomodations factor) kg	Total Volume (no accomodations factor) ft^3	Total Volume (no accomodations factor) m^3	length (external only) inches	Width (external only) inches	height (external only) inches
HRF-Dewar	Utilization	ULJSC	*60.0*	27.21	2	0.567	n/a	n/a	n/a
Temporary Equipment Restraint Aid (TERA)	System	Maintenance	42.95	19.48	18.63	0.528	77	19	22
HRF-ULF1-Resupply	Utilization	ULJSC	*97.0*	44		0.467	n/a	n/a	n/a
HEAT EXCHANGER	System	Maintenance	92.59	42.00	13.89	0.393	40	30	20
Depress/Repress Pump	System	Maintenance	210	95.25	13.75	0.389	36	60	11
FUEL CELL WATER TANK	System	Maintenance	159	72.12	13.46	0.381			
PFR Workstation Stanchion Assy	System	Maintenance	48.53	22.01	11.85	0.336	67.78	28.5	10.6
Articulating Portable Foot Restraint	System	Maintenance	63	28.58	10.85	0.307	25	25	30
Panel A, Electrical Assy (W11)	System	Maintenance	23	10.43	10.76	0.305	31	20	30
SPCU Maint. Kit	System	Maintenance	61	27.67	10	0.283			
HRF-STO4	Utilization	ULJSC	*224.0*	101.6		0.280	n/a	n/a	n/a
Tool Holder Assembly (THA)	System	Maintenance	58.8	26.67	9.04	0.256	26.7	26	22.5

Cargo Matrix (continued)

or Bag Size	Subcarrier/FSE	Preferred Launch Location	On-Orbit Location	Descent Type	ISS Transfer Method	ISS Transfer Restrictions	Resources Required	Environ constraints - Prelaunch, Pad, Ascent, Vehicle on-orbit, Descent, Post descent	Ascent/Return Qualification Limits	Hazard Type	Criticality Level	Response Period	Transfer Location
n/a	MDL	Internal	Internal		IVA		n/a	yes			C5		KSC
Rack	MPLM	Internal	External		EVA	APAS					C1R		
	Bag	Internal	Internal		IVA		n/a				C5		KSC
Rack	MPLM	Internal	Internal		IVA						C1		
Rack	MPLM	Internal	Internal		IVA	APAS					C1R		
	MPLM	Internal	Internal		IVA						C1R		
Rack	MPLM	Internal	External		EVA	APAS					C1R		
Rack	MPLM	Internal	External		EVA						C1R		
M01	MPLM	Internal	External		EVA	APAS					C2R		
	MPLM	Internal	Internal		IVA						C1R		
1 CTB	Bag	Internal	Internal		IVA		n/a				C5		KSC
Rack	MPLM	Internal	External		EVA						C2		

Cargo Matrix Sorting

- Cargo matrix currently contains 1,374 line items of non-Russian hardware
- Preferred launch position
  - 86% of cargo items are internal
    - Only 2 items are over 300 lbs
    - Only 6 items are over 200 lbs
  - 14% of cargo items are external
    - 90% of external items are ORUs (174 line items)
- Resupply requirements
  - A 90-day increment for 3-member crew requires about 100 CTBEs of consumables
  - A 90-day increment for 7-member crew requires about 220 CTBEs of consumables

Cargo Matrix

- **All non-Russian cargo items**
  - 8% of all cargo items are above 200 lbs
    - Represents 44 different cargo types
      - 39 items are System ORUs
      - 40 items are External
- **Approximately 70% of external ORUs fit in a volume of 36 x 47 x 25 inches**
- **Approximately 90% of Utilization cargo items weigh less than 100 lbs**
- **Majority of active cargo items are in the 50-75 lb range (i.e., 1 middeck locker size)**
  - Active cargo items represent 30% of all cargo items in this range

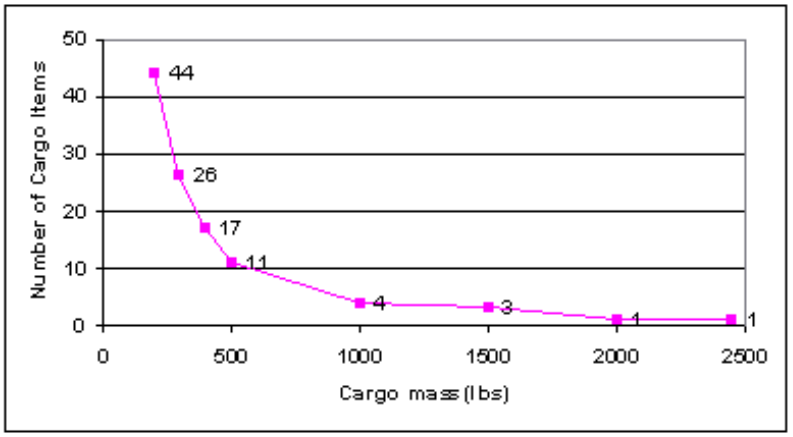

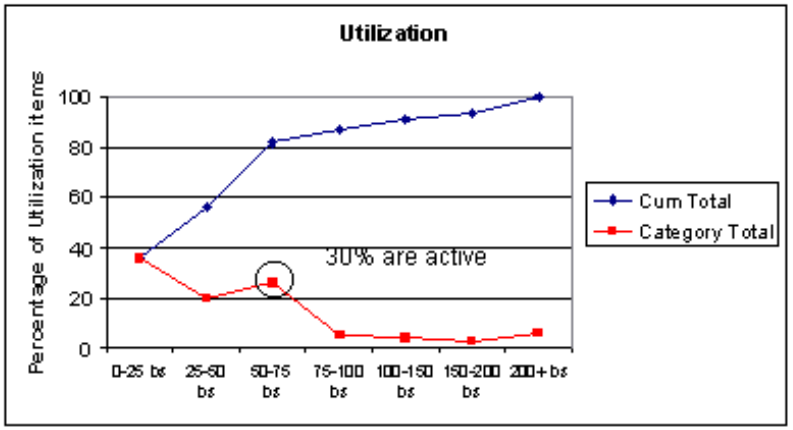

Design Reference Missions (DRMs)

DRM ID	AAS 1	AAS 2	AAS 3
Description	Rapid Response - launch on need of critical spare	Maximum All cargo - mixed maximum cargo case	All cargo - mixed minimum cargo case
Cargo - Major Type	No Existing Requirements	Systems and Utilization	Systems and Utilization
Cargo - Minor Type		Full cargo Matrix	Full cargo Matrix
Carrier Type		Pressurized Unpressurized	Pressurized Unpressurized
Total Mass (cargo and accomodations) kg		Press - 2270 Unpress - 860	Press - 2830 Unpress - 1470
Total Volume (cargo and accomodations) Press: CBTE, Unpress:ft^3		Press - 130 Unpress - 45	Press - 170 Unpress - 80
ISS Transfer Method		IVA and EVR	IVA and EVR
ISS Attach period		Min ~ 8 days Max ~ 35 days	Min ~ 11 days Max ~ 21 days
Cargo Support Requirements			
Ground		Power Cooling Data	Power Cooling Data
Launch Pad		Power Cooling Data	Power Cooling Data
Ascent/Pre-transfer		Power Cooling Data	Power Cooling Data
Post Transfer (down cargo)		N/A	N/A
Post landing (down cargo)		N/A	N/A

Design Reference Missions (DRMs) (concluded)

DRM ID	AAS1	AAS 2	AAS 3
Cargo Qualification Limits	No Existing Requirements	**Pressurized** Load Factors N(x) +/- 9.0 g N(y) +/- 11.6 g N(z) +/- 9.9 g Thermal 20 to 26.7 C Pressure 13.9 to 15.2 psia **Unpressurized** N(x) +/- 10.0 g N(y) +/- 2.5 g N(z) +/- 2.5 g Thermal -43 to 71 C	**Pressurized** Load Factors N(x) +/- 9.0 g N(y) +/- 11.6 g N(z) +/- 9.9 g Thermal 20 to 26.7 C Pressure 13.9 to 15.2 psia **Unpressurized** N(x) +/- 10.0 g N(y) +/- 2.5 g N(z) +/- 2.5 g Thermal -43 to 71 C
Cargo Hazard Level		Compressed Gas Biologicals Chemicals Combustibles	Compressed Gas Biologicals Chemicals Combustibles
Response Period		Under review	Under review
ID to Cargo available		Under review	Under review
ID to at ISS		Under review	Under review
Cargo Transfer Location		KSC	KSC
Cargo Return Location		KSC	KSC
Flights per Period		5/year	2/year

DRM – Rapid Response

- ISS currently does NOT have a requirement for a rapid response vehicle
  - ISS maintains a 45-day skip cycle requirement on all consumables (Progress is committed to a 45-day response capability)
  - ISS maintains system-critical spare ORUs on orbit
  - ISS was designed with redundant systems to prevent a single failure from loss of vehicle or crew
    - Exceptions are large fire, rapid depressurization, or medical emergency
  - Multiple failures may create a risk to the vehicle or the crew
    - Infinite combination of multiple ORU failures; very difficult to quantify

AAS Requirements Document Outline

- 1. Introduction
- 2. Purpose
- 3. Scope
- 4. Assumptions
- 5. Cargo Templates
  - a. External
  - b. Internal
  - c. Mixed
- 6. Cargo Transfer to Service provider
  - a. ISS Packing
  - b. Flight Support Equipment (FSE)
  - c. Point of transfer
- 7. Design Reference Missions
  - a. Purpose
  - b. Description of contents
  - c. How To Use
  - d. Matrix
- 8. Other Requirements and Limitations
  - a. Berthing
  - b. ISS Attach Points Available
  - c. Cargo Restraints
  - d. Pressurized Cargo Access
  - e. Unpressurized Cargo Access
  - f. ISS Support Available
  - g. Etc.
- 9. Acronyms
- 10. Definitions
- 11. Reference Documents

Resolved Issues

- No propellant delivery ground rule
- ISS resources available to AAS
- ISS attach time
- Berth at SSRMS or JEM RMS
- ATV and HTV availability date

ISS Resources Available to AAS

- Some ISS resources may be available for AAS use:
  - Power
  - Cooling Water
  - Command & Data Handling
- Power is currently the only ISS resource that is provided to attached existing VVs
- Resource availability for each Visiting Vehicle would have to be defined in its own ICD document

ISS Attach Time

- "Attach time" is defined as the time that the AAS is physically connected to an ISS port
- Minimum attach time driven by the amount of time required to unload cargo and reload trash into the AAS
  - Based on 22.5 crew minutes per bag transfer rate, using 2 full-time crew members for 16 crew hours per day
- Maximum attach time determined by vehicle traffic, ISS resources required, and maintaining microgravity quiescent period requirements
  - Resources will be negotiated so that it will not exceed ISS capability
- Preference to leave the VV attached as long as possible to provide extra storage space

SSRMS or JEM RMS Berthing

- Cannot use SSRMS as nominal berthing position
  - Would require EVA for cargo transfer
  - EVAs eliminated by ground rule
- JEM RMS berthing
  - Arm can grapple 7000 kg of mass
  - Affixed to the station without "walking" capability
  - Limited to 10 meter reach for grappling
  - Zero-Fault Tolerant
- Use of any RMS as a berthing position not viable

ATV Availability

- ATV vehicle currently scheduled to launch in late 2004
  - Probable six month delay, pushing it into 2005
  - First flight will be a cargo flight
- Will dock to SM Aft port

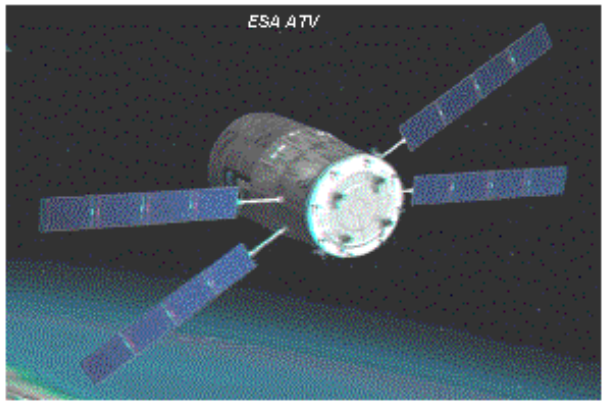

HTV Availability

- First flight scheduled for 2004
  - Probable delay until late 2005
  - First flight a demo flight, with a cargo flight later that year
- Will berth to Node 2 Nadir CBM port

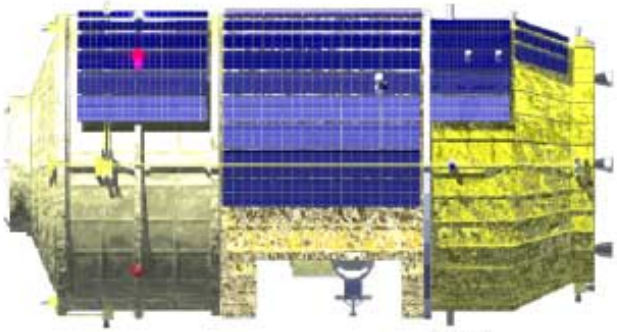

Open Issues

- No APAS docking ground rule

No APAS Docking Ground Rule

- Three basic types of Docking Ports on ISS
  - Androgynous Peripheral Attachment System (APAS)
  - Common Berthing Mechanism (CBM)
  - Russian Ports
- Docking to a Russian Port would require interfacing with the Russian Partners
  - Responsibility for negotiations fall on vehicle developers
- Recent ISS Program memo signed by B. Gerstenmaier dictates that APAS not be used for AAS
  - Desire to preserve two APAS on-orbit for use as primary and secondary shuttle docking port
  - AAS vehicles must berth to CBM using robotic arm
  - Working with ISS Program Integration Office to resolve
  - Availability of Passive CBMs is uncertain

Traffic Models to Run

- Business case
  - 30% of next 10 Ariane 5 vehicles will fail. Any ATVs on these will be lost. Subsequently, 10% failure factor will be used.
  - 30% of next 10 H2 vehicles will fail. Any HTVs on these will be lost. Subsequently, 10% failure factor will be used.
  - 10% of Progress missions will fail
  - Shuttle will skip one mission cycle every 3 years
- Sensitivity studies against business case
  - Eliminate upmass on the Payload Program limiting factor
  - AAS is only pressurized
  - AAS is only unpressurized
  - AAS is passive
  - AAS may be pressurized on unpressurized, but not mixed
  - 5 Shuttle flights per year

Future Work

- January 2002 Interim Review (at MSFC?)
- Develop full range of DRMs
- Determine cargo supply timelines
- Final deliveries
  - Final report
  - Requirements document
  - Reference library
- Resolve open issues

BACKUP

Detailed Schedule

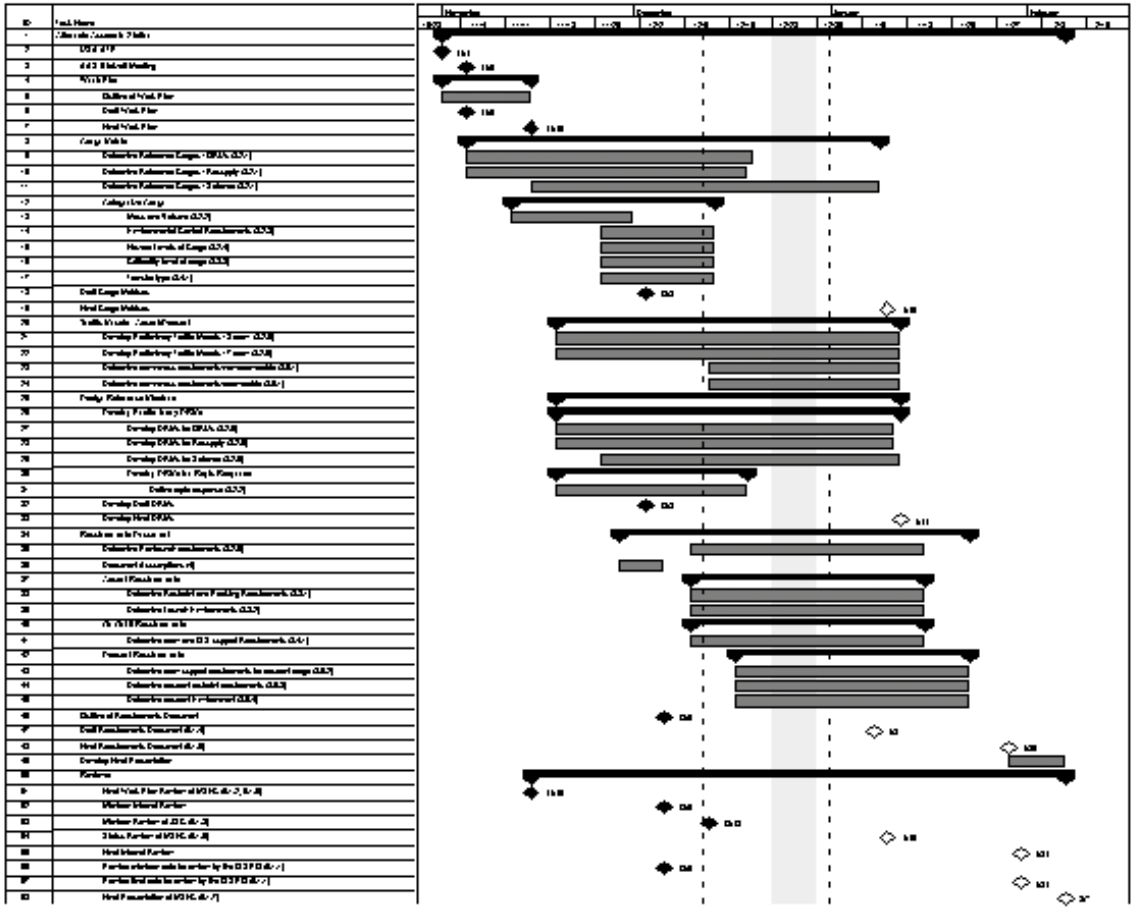

Traffic Model Parameters

- **ISS Assembly Sequence and schedule**
- **ISS altitude profile**
- **Logistics Vehicle Characteristics**
  - Shuttle, Progress M, Progress M1, ATV, HTV
  - Cargo resupply/return capabilities: total cargo up/down, pressurized cargo up/down, unpressurized cargo up/down, recoverable return cargo capability, max propellant resupply capability, water up/down, gas up/down
  - Cargo packing efficiencies
  - Pressurized, unpressurized and total volume
  - Orbit altitude adjustment parameters
  - Docking/Berthing port requirements and constraints
  - Docking/Berthing altitude constraints
  - Return capabilities (recoverable and non-recoverable)
  - Scheduling rules: launch window constraints, min/max flight rates, minimum time between flights, 1st available dates, min/max on-orbit docked durations
  - Mission profiles
- **Logistics vehicle loading priorities for each vehicle type**

Traffic Model Parameters (continued)

- **Proton, Soyuz, and Shuttle assembly flight constraints and scheduling rules**
- **ISS Crew Rotation Requirements (schedules and resupply requirements)**
- **MOA between ISS Program and Shuttle Program**
- **Assembly and maintenance EVA projections**
- **ISS Cargo Accommodations and Carrier characteristics**
  - FRAM, ICC, MPLM, express pallet, SLP, NASDA HRRs (12-rack and 3-rack pressurized modules), NASDA unpressurized pallet, ULCs, subcarriers, RSRs, R/Fs, RSPs, ISPR, FSE (e.g., PRLAs), MPESS, Bay 13 carrier, CWCs, N2 tanks, MLs
  - Tare weights, Cargo capacities (mass and volume), Cargo complements
- **Shuttle Consumables estimates for ISS flights**
- **ISS Resupply Requirements for USOS and all IP Segments**
  - Crew size (crew resupply requirements are given as daily requirements per crew member)
  - R/F food, ambient food, clothes, misc crew supplies, CHeCS, pressurized spares, unpressurized spares, Pressurized science, unpressurized science, EVA equipment, crew rotation, water, oxygen, nitrogen, O2 candles, RS medical, filters, bags, WW containers
- **ISS Cargo Return Requirements for USOS and all IP Segments**
  - Recoverable and Non-recoverable

Traffic Model Case A - Assumptions

Boeing performed Traffic Model Analysis in 2001.

- **4 Shuttle flights per year for ISS - a mix of**
  - Pressurized flights with cargo in MPLM and Middeck
  - Unpressurized flights with cargo on 2VCCs, 1 Express Pallet and Middeck
- **Assembly complete after flight 15A**
  - Node 2 not included
- **Total of 3-member crew**
  - Shuttle re-supplies 1.5-member crew
  - Russia re-supplies 1.5-member crew
- **Payload cargo assumed to be remaining capability after crew and L&M requirements are loaded**
- **Shuttle crew consists of 6 members**
- Half of the cargo capability of the carriers is cargo; half is FSE
- **Two scenarios are addressed**
  - 1) Russia is the only International Partner participating
  - 2) All International Partners are participating

Traffic Model Case A - Russia Only IP Option

- 2 Pressurized and 1 unpressurized flights per year

- USOS PV battery resupply on Shuttle beginning in 2007 of 1500 kg/year

	Press Requirements	Unpress Requirements	Press Capability	Unpress Capability	Delta for Pressurized Science + FSE	Delta for Unpressurized Science+ FSE
2004	2780	2619	11485	7600	8705	4981
2005	2849	2838	11485	7600	8636	4762
2006	2918	3056	11485	7600	8567	4544
2007	2988	4774	11485	7600	8497	2826
2008	3057	4993	11485	7600	8428	2607

Traffic Model Case A - IP Option

- **Assume one Shuttle flight per year is used for International Partner modules**
- **HTV carries non-Russian PV batteries**

2 Press, 1 Unpress

	Press Req'ts	Unpress Req't's	Press Capability	Unpress Capability	Pressurized Science	Unpressurized Backlog(-) or Margin (+)
2004	2780	2619	10778	3800	7998	1181
2005	2849	2838	10778	3800	7929	962
2006	2918	3056	10778	3800	7860	744
2007	2988	3274	10778	3800	7790	526
2008	3057	3493	10778	3800	7721	307

1 Press, 2 Unpress

	Press Req'ts	Unpress Req't's	Press Capability	Unpress Capability	Pressurized Science	Unpressurized Backlog(-) or Margin (+)
2004	2780	2619	6449.5	7600	3669	4981
2005	2849	2838	6449.5	7600	3600	4762
2006	2918	3056	6449.5	7600	3531	4544
2007	2988	3274	6449.5	7600	3462	4326
2008	3057	3493	6449.5	7600	3393	4107

1 Press, 1 Unpress, 1 Mixed

	Press Req'ts	Unpress Req't's	Press Capability	Unpress Capability	Pressurized Science	Unpressurized Backlog(-) or Margin (+)
2004	2780	2619	10778	5614	7998	2995
2005	2849	2838	10778	5614	7929	2776
2006	2918	3056	10778	5614	7860	2558
2007	2988	3274	10778	5614	7790	2340
2008	3057	3493	10778	5614	7721	2121

Traffic Model Sample Run – Microgravity Quiescent Period

Max Case, 5 Flight Opportunities

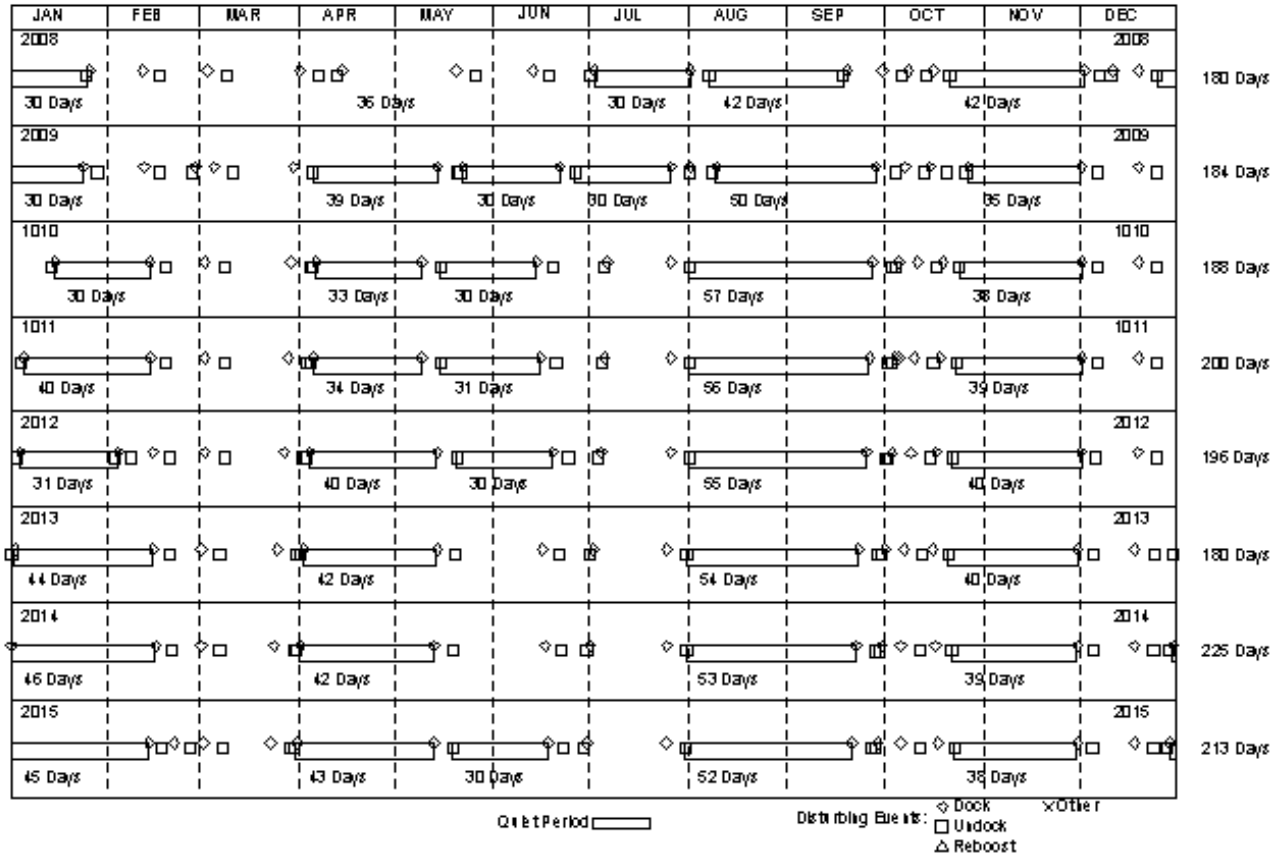

Traffic Model - DAC 8 Cargo Return Assumptions

Recoverable Pressurized Cargo

- **Utilization cargo**
  - 95% of NASA & CSA cargo
  - 67% of NASDA cargo
  - 62% of ESA cargo
  - 12% of Russian cargo
- **Spares/Maintenance cargo**
  - 97% of NASA & CSA cargo
  - 19% of NASDA cargo
  - 0% of ESA & Russian cargo

Recoverable Unpressurized Cargo

- **Utilization cargo**
  - 95% of NASA & CSA cargo
  - 33% of NASDA cargo
  - 0% of ESA cargo
  - N/A for Russian cargo (assume no unpressurized utilization requirement)
- **Spares/Maintenance cargo**
  - 65% of NASA & CSA cargo
  - 41% of NASDA cargo
  - 0% of ESA & Russian cargo

Other Recoverable Cargo

- 32% of non-Russian crew supplies
- 78% of non-Russian CHeCS cargo

Cargo Density from ISS Flights

- *Spacehab bags are packed more densely than the RSR lockers or M-bags*
  - *This is not an apples-to-apples comparison though...*
    - *Spacehab bags can be chosen to more closely fit the sizes of the items being packed because most bags are not put into racks*
    - *These flights were biased towards outfitting hardware, which is more dense than average cargo density*
- *Larger bags generally tend to be less dense*
- *Additional data from DO/B. Janda for 5A.1, 6A, and 7A.1 has an average density of 20.4 lbs/ft^3*

20.3 lbs/ft^3

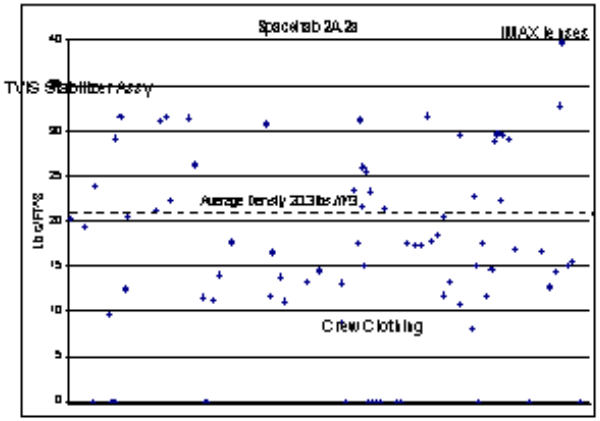

22.1 lbs/ft^3

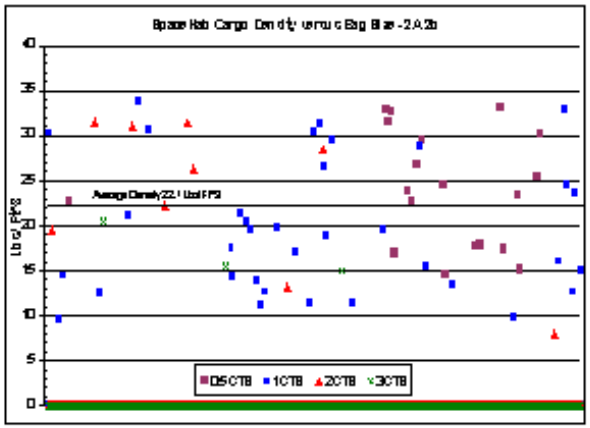

Data provided by OM/J. Miller

Cargo Density of Progress-3 Crew Provisions

- ***Progress is packed using half-CTBs***
  - *In general, half CTBs pack more densely than larger bags because square bags are put into a round compartment*
  - *Progress-3 is carrying mostly crew supplies.*

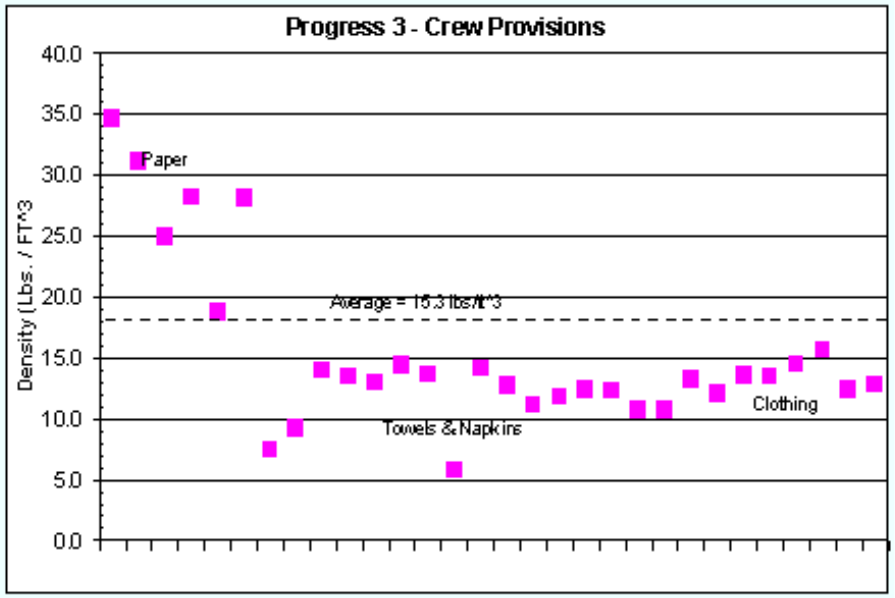

Cargo Matrix Definitions

ITEM	DEFINITION
Cargo - Major Type	Assembly, Systems, or Utilization
Cargo - Minor Type	Maintenance, Resupply, CHeCS, Ancillary Hardware, etc
Total Mass	Total cargo mass (lbs/kg), not including accomodations factor. Total mass with accomodations factors will be calculated for the final delivery
Total Volume	Total cargo volume (ft^3/m^3) not including accomodations factor. Total volume with accomodations factors will be calculated for the final delivery
Lengh	For external or direct mount cargo only(ft^3/m^3)
Width	For external or direct mount cargo only(ft^3/m^3)
Height	For external or direct mount cargo only(ft^3/m^3)
or Bag Size	Use ISS standard cargo accommodations, i.e. Cargo Transfer Bags (CTB), 1 CTB Equivalent (CTBE) = 1.86 ft^3 / .053 m^3. This column is mutually exclusive with the previous column; something is either put in a bag or mounted directly; not both.
Subcarrier/FSE	Flight Support Equipment (FSE). "Direct" = internal payload requiring a hard middeck locker (mdk) and is mounted directly to the wire tray. "FRAM" = external payload. This column is mutually exclusive with the previous column; something is either put i
Preferred Launch Location	Suggested location of cargo for launch, either internal or external
On-Orbit Location	Installed location of hardware on-orbit, either internal or external
ISS Transfer Method	Internal Vehicular Activity (IVA), External Vehicular Activity (EVA), External Vehicular Robotic Activity (EVR)
ISS Transfer Restrictions	APAS, Common Berthing Mechanism (CBM), Russian port, Joint Airlock, Russian Airlock
Resources Required	On launch pad, during ascent/descent. Active includes power requirements, cooling requirements, etc.
Environmental Constraints	
Ascent/Return Qualification Limits	ex: meets Shuttle/Progress Qualification Limits
Hazard Type	Stored energy, batteries, biological, chemical, radioactive
Criticality Level	For Mission Success, as defined in SSP 30223 Problem Reporting and corrective Action (PRACA) for the ISS
Response Period	Time required to prep cargo before turning over to launch provided
Transfer Location	Where cargo will be turned over to AAS program, will be within US (ex: KSC, JSC)

Cargo Complements

- **44 cargo items over 200 lbs**

	Name	Major Type	Total Mass (no packing/ factor) lbs	Subcarrier/ PSC	On-Orbit Location	BS Transfer Method	Criticality Level
1	Radiator ORU	System	2450	ULC	External	EVA	C1S
2	Ammonia Tank Assembly	System	1818	ULC	External	EVA	C1S
3	PV Radiator & Scissorbeam ORU	System	1608	ULC	External	EVA	C2
4	Thermal Radiator Rotary Joint	System	1142	ULC	External	EVA	C1R
5	MAST CANISTER ASSY.	System	916	ULC	External	EVA	C1R
6	Pump Module	System	860	ULC	External	EVA	C2R
7	BLANKET ANDBOX - L	System	721	ULC	External	EVA	C1
8	BLANKET ANDBOX - R	System	720	ULC	External	EVA	C1R
9	ARM ORU	System	644	ULC	External	EVA	C2
10	Control Moment Gyro (CMG)	System	599	ULC	External	EVA	C1
11	Nitrogen Tank Assembly	System	567	ULC	External	EVA	C1S
12	Express Pallet Payload	Utilization	500	FRAM	External	EVR	C5
13	Crew & Equipment Translation Aid (CETA)	System	498	ULC	External	EVA	C3
14	Flex Hose Rotary Coupler (FDTA)	System	454	ULC	External	EVA	C1R
15	LATCHING ENDEFFECTOR (LEE)	System	449	ULC	External	EVA	C1R
16	LATCHING ENDEFFECTOR (LEE) (POA)	System	425	ULC	External	EVA	C2R
17	ORU BASE ASSEMBLY	System	403	ULC	External	EVA	C1R
18	LATCHING ENDEFFECTOR (LEE)	System	399	ULC	External	EVA	C2R
19	BATTERY ASSEMBLY	System	364	ULC	External	EVR	C1R
20	PLASMA CONTACTOR	System	351	Sidewall	External	EVA	C1R
21	BOOM ASSEMBLY A, SSRMS	System	342	ULC	External	EVA	C1R
22	MITUS REEL	System	330	ULC	External	EVA	C2R
23	SKI	Utilization	330	FRAM	External	EVR	C5
24	SDRUMS-PM	Utilization	320	Quad Midd	Internal	IVA	C5
25	BODY ROLL JOINT (BRJ)	System	315	Sidewall	External	EVA	C2R
26	UPPER BODY STRUCTURE (UBS)	System	307	ULC	External	EVA	C2
27	BOOM ASSEMBLY B, SSRMS	System	298	ULC	External	EVA	C1R
28	ELECTRONIC FLATFORM P1	System	265	Sidewall	External	EVA	C2
29	JOINT YAW	System	248	Sidewall	External	EVA	C1R
30	MAIN BUS SWITCHING UNIT	System	247	Sidewall	External	EVR	C1R
31	JOINT PITCH/ROLL	System	241	Sidewall	External	EVA	C1R
32	Cable Box Type B,V	System	235	ULC	External	EVA	C1R
33	Pump & Flow Control Subassembly	System	234	Sidewall	External	EVR	C1R
34	ELECTRONIC FLATFORM P2	System	233	Sidewall	External	EVA	C2
35	BATTERY CHARGE/DISCHARGE UNIT	System	233	Sidewall	External	EVR	C1R
36	LINEAR DRIVE UNIT	System	231	Sidewall	External	EVA	C2R
37	S-Band Antenna & Support Assembly (SASA)	System	227	Sidewall	External	EVA	C1SR
38	Drive Lock Assembly (TRRJ)	System	226	Sidewall	External	EVA	C1R
39	SDRUMS-C4	Utilization	224	Other	Internal	IVA	C5
40	HRF-STO4	Utilization	224	Bag	Internal	IVA	C5
41	DC SWITCHING UNIT	System	218	Sidewall	External	EVR	C1R
42	Depressed Express Pump	System	210	MPLM	Internal	IVA	C1R
43	Utility Transfer Assembly (UTA)	System	204	Sidewall	External	EVA	C1R
44	Cable Box Type V1	System	200	ULC	External	EVA	C1R

DRM Matrix Definitions

ITEM	DEFINITION
DRM ID	Arbitrary Identification of DRM
Description	Text description of the DRM to include the representative cargo complement, packing provided by ISS, unique restraint requirements, etc.
Cargo - Major Type	Systems or Utilization, Up or Down Cargos
Cargo - Minor Type	Breakdown of the Major Type e.g.: Planned replacement, Quick Response, Wet Goods, ORUs, Experiments, ISS System Consumables, Crew Rotation Provisions, Crew Food, Ancillary Hardware, etc
Carrier Type	Pressurized, unpressurized, exposed cargo, etc.
Total Mass (Cargo and accomod	Total mass including all cargo, ISS provided packing, and ISS provided mounting provisions.
Total Volume	Total volume including ISS provided packing and ISS provided mounting provisions.
ISS Transfer Method	Crew through the hatch, EVA, SSRMS, etc
ISS Attach period	How long the carrier must remain attached to the ISS to complete cargo transfer and other activity.
Cargo Support Requirements	The support required by the cargo during different phases of the operation (see below). This includes thermal limits, cleanliness, static, power support, data, etc. AAS service provider facility support requirements are provided (e.g. biological laboratory). Unique time limits (late load, early access, etc) are given.
Ground	
Launch Pad	
Ascent/Pre-transfer	
Post Transfer (down cargo)	
Post landing (down cargo)	
Cargo Qualification Limits	Vibration/Acoustic, acceleration, etc.
Cargo Hazard Level	See cargo matrix (stored energy, chemical, radioactive, fragile, etc.)
Response Period	
ID to Cargo available	Time from when the mission is identified to when the cargo is transferred to the AAS service provider.
ID to at ISS	Time from when the mission is identified to when the cargo is required attached to the ISS.
Cargo Transfer Location	The location the AAS service provider receives the cargo (not necessarily the launch site).
Cargo Return Location	The location the AAS service provider delivers returned cargo (not necessarily the landing site).
Flights per Period	Average Flights per period for a specific DRM

Rapid Response Timeline

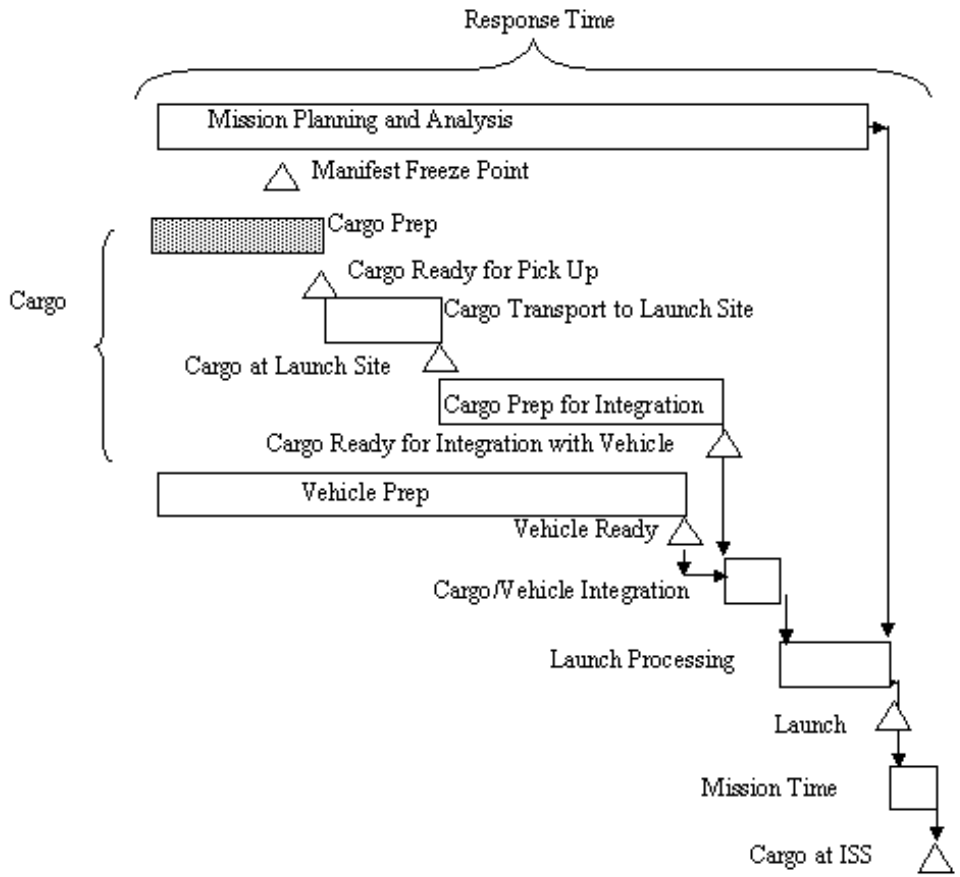

FRAM Weight

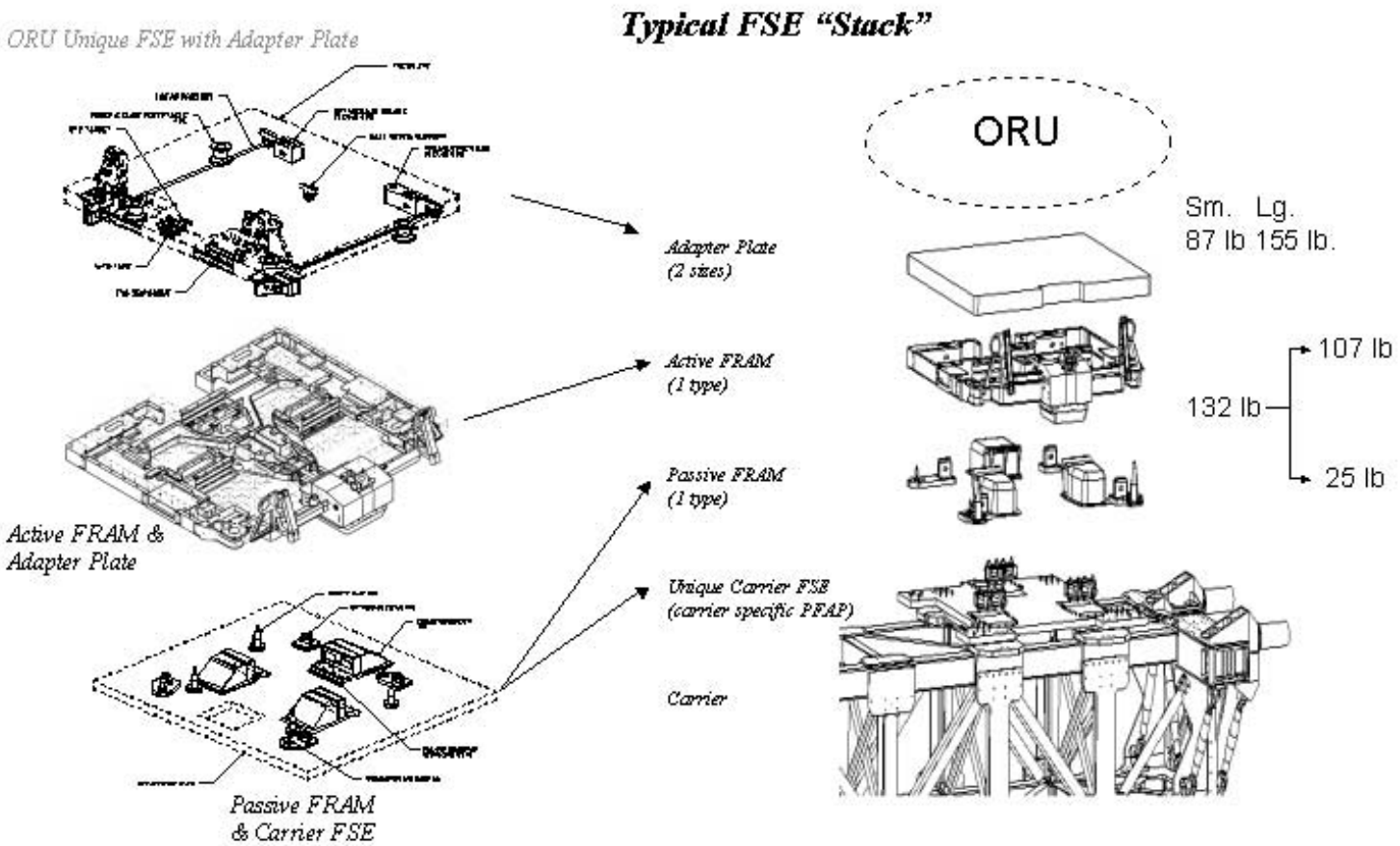
ORU Unique FSE with Adapter Plate
Typical FSE "Stack"
ORU
Sm. Lg.
87 lb 155 lb.
Adapter Plate
(2 sizes)
Active FRAM
(1 type)
132 lb
107 lb
25 lb
Passive FRAM
(1 type)
Active FRAM &
Adapter Plate
Unique Carrier FSE
(carrier specific PFAP)
Carrier
Passive FRAM
& Carrier FSE

Comparison Data of IP Cargo Vehicles

	Progress M1 (Improved Soyuz)	ATV	HTV
Maximum Cargo (kg)	2500	9145	6000
Maximum Dry Cargo (kg)	1800	5500	6000
Maximum Unpressurized Cargo (kg)	n/a	n/a	1500
Maximum Useable Pressurized Volume (m^3)	6.6	22	9.7
Maximum Down Mass Cargo (Destructive) (kg)	1600	5500	6000
Maximum Unpressurized Down Mass Cargo (kg)	n/a	n/a	1500
Maximum Liquid Waste Capability (destructive) (kg)	n/a	840	300
Maximum On-orbit Lifetime (days)	180	180	13
Average Power from ISS (watts)	400	400	1500
Nominal Docking/Berthing Port	SM Aft	SM Aft	N2 Nadir
Flight Rate Per Year	3 - 6	0.5 - 2	1 - 2

Grapple Hand-off Maneuver

- Concept is to capture AAS with SSRMS and to stow unpressurized cargo with the JEM RMS
- JEM RMS limited reach establishes small berthing box around the JEM not originally intended for VV operations
- SSRMS provides power only if a Power Data Grapple Fixture is used
- Limited to cargo that can fit through JEM sliding transfer tray or one piece of large unpressurized cargo
  - SSRMS must release AAS before taking cargo back from JEM RMS
- Operation dependent on zero-fault tolerant JEM RMS

APAS Mechanisms

- APAS mechanisms, allow for "soft" shuttle docking to ISS
- On-Orbit:
  - PMA 2 and 3
- Spares on Ground:
  - 1 active for backup/spare
  - 1 active and 1 passive originally intended for prop module use to be delivered in 2003
  - 4 "harder docking" Mir-class units also available

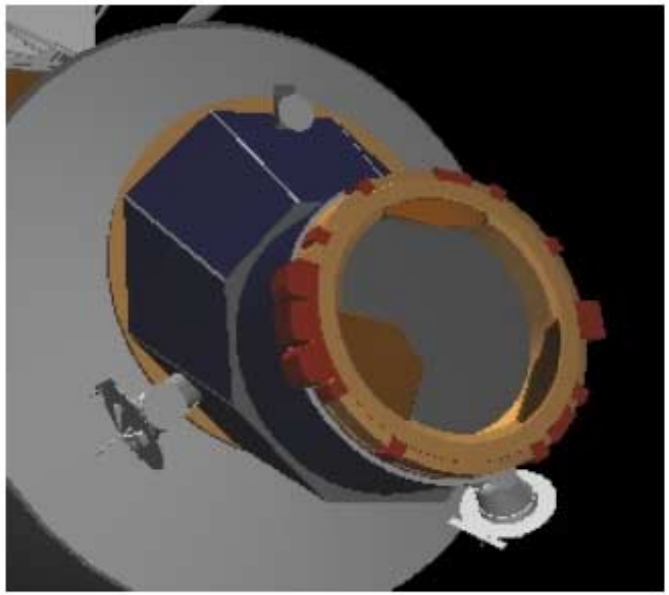

CBM Mechanisms

- Requires use of robotic arm for berthing operations
- No current spares existing or on order
- Boeing is beginning shut down of assembly facilities
  - All active CBMs believed to be delivered
  - NASDA hopes to continue purchasing passive CBMs

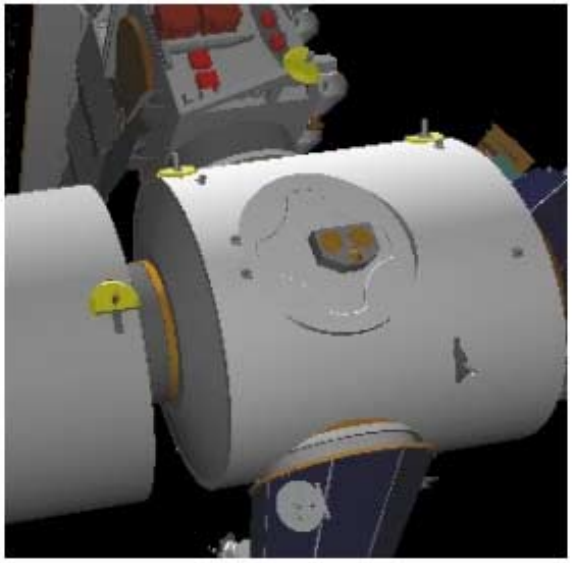

Alternate Access to Station (AAS)
USA Interim Review

Videoconference Presentation at:

USA/Houston

MSFC/Huntsville

01/11/02

United Space Alliance

Safety

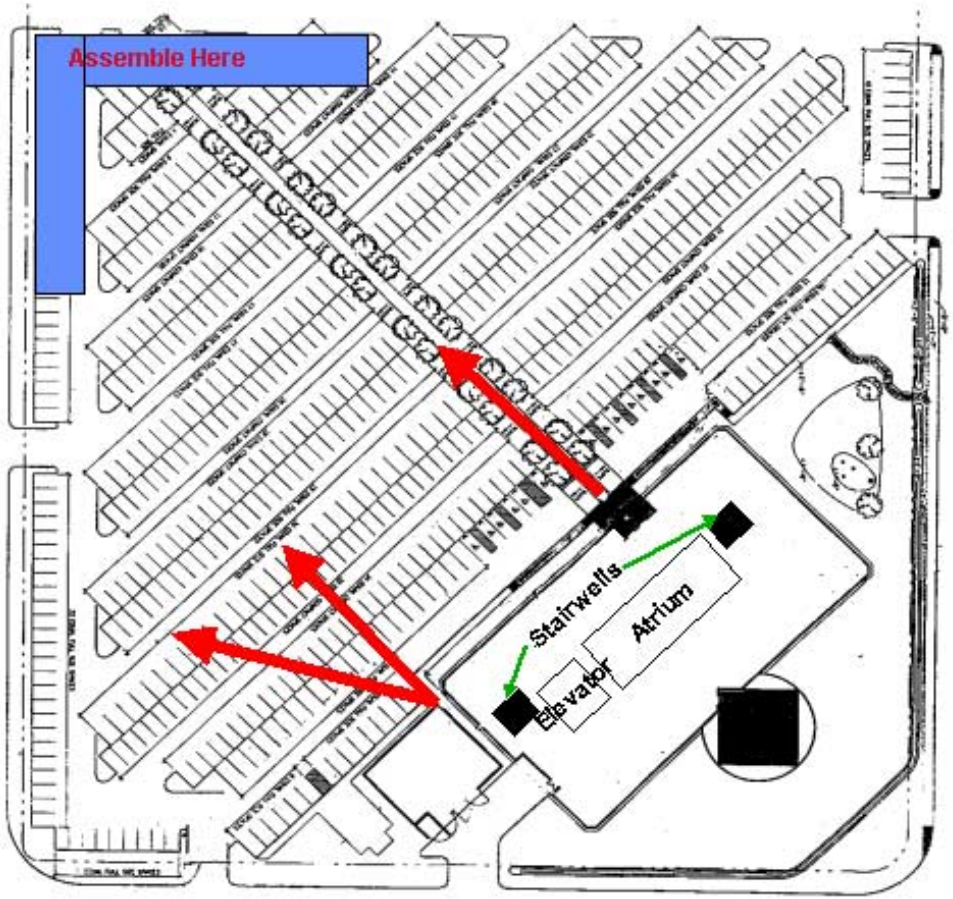

1150 Gemini Evacuation Areas

Today's Plan

- Interim Review Presentation
- Question and Answer

Purpose

- Schedule / Budget
- Current AAS Study Status
  - Traffic Model Analyses
  - DRM development
  - AAS Performance Requirements Document
  - Final Report
- Closed Issues
- Open Issues
  - Use of APAS
  - Recoverable Descent Backlog
- Identify Forward Plan

Schedule Highlights

- ATP – 10/26/01 (Complete)
- Booze Allen Hamilton Task Order – 11/05/01 (Complete)
- Space America under contract – 11/14/01 (Complete)
- Project Work Plan Review at MSFC – 11/15/01 (Complete)
- Midterm Review at JSC – 12/13/01 (Complete)
- **Interim Review Teleconference – 01/11/02 (Today)**
- **Final Review at MSFC – 02/07/02**

AAS Work Plan

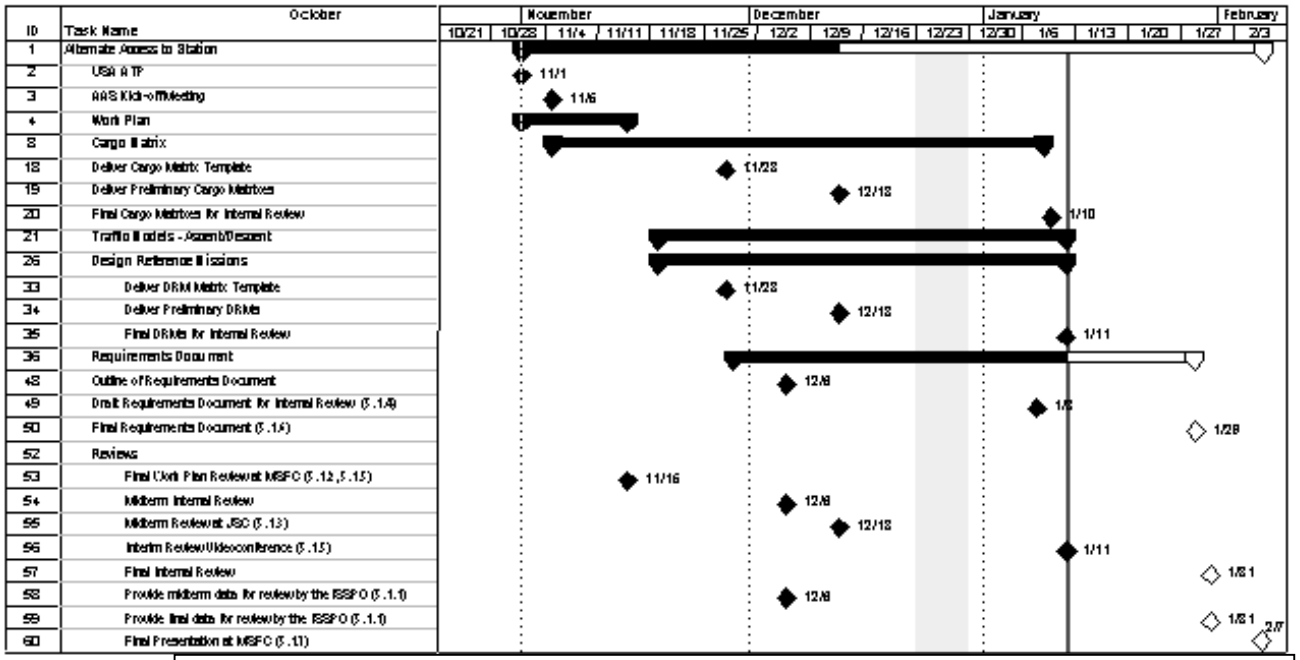

Budget data has been omitted.

Budget Variance

- Subcontractor actual costs not yet fully posted
- Travel expenditures running below projections (good travel deals)
- USA labor under running projections
  - Straight line estimated not accounting for start-up ramp
  - Team delays due to ISS baseline uncertainty
  - Expect to close gap in January/February

Traffic Model – Revised Matrix

Crew Size	ISS Configuration					
	Core with IP vehicles	Core without IP vehicles	Accommodations for 6 with IP vehicle	Accommodations for 6 without IP vehicle	Enhanced with IP vehicles	Enhanced without IP vehicles
3	A	C				
6			D	E		
7					F – min cargo G – Nom, mix cargo H – Nom, press cargo I – Nom, ext cargo J – Incr util, mix cargo K – Nom, 3 Progress	B – max cargo

Items in blue represent TM runs since the Interim Review

Traffic Model – Revised Matrix TM Descriptions

- Nominal case → Case G: Nom, mix cargo
  - 10% failure rate for Ariane 5 vehicle with ATV
  - 10% failure rate for H2A vehicle with HTV
  - Failure rate for Progress missions identified at mid-term review (10%) is taken into account with use of Progress flight rate of 4 per year (ISS Program baseline is 6 vehicles per year)
  - Shuttle will skip one mission cycle every 3 years
- Proposed TM sensitivity studies from Interim Review
  - Eliminate upmass as Payloads limiting factor → Case J: Incr util, mix cargo
  - AAS is only pressurized → Case H: Nom, press cargo
  - AAS is only unpressurized → Case I: Nom, ext cargo
  - AAS is passive → reuse Cases B & F
  - Mixed fleet of pressurized only / unpressurized only AAS vehicles → extrapolate from Cases G
  - Reduced Progress flights → Case K: Nom, 3 Progress per year
    - Results indicate a significant propellant shortfall

Traffic Model Results

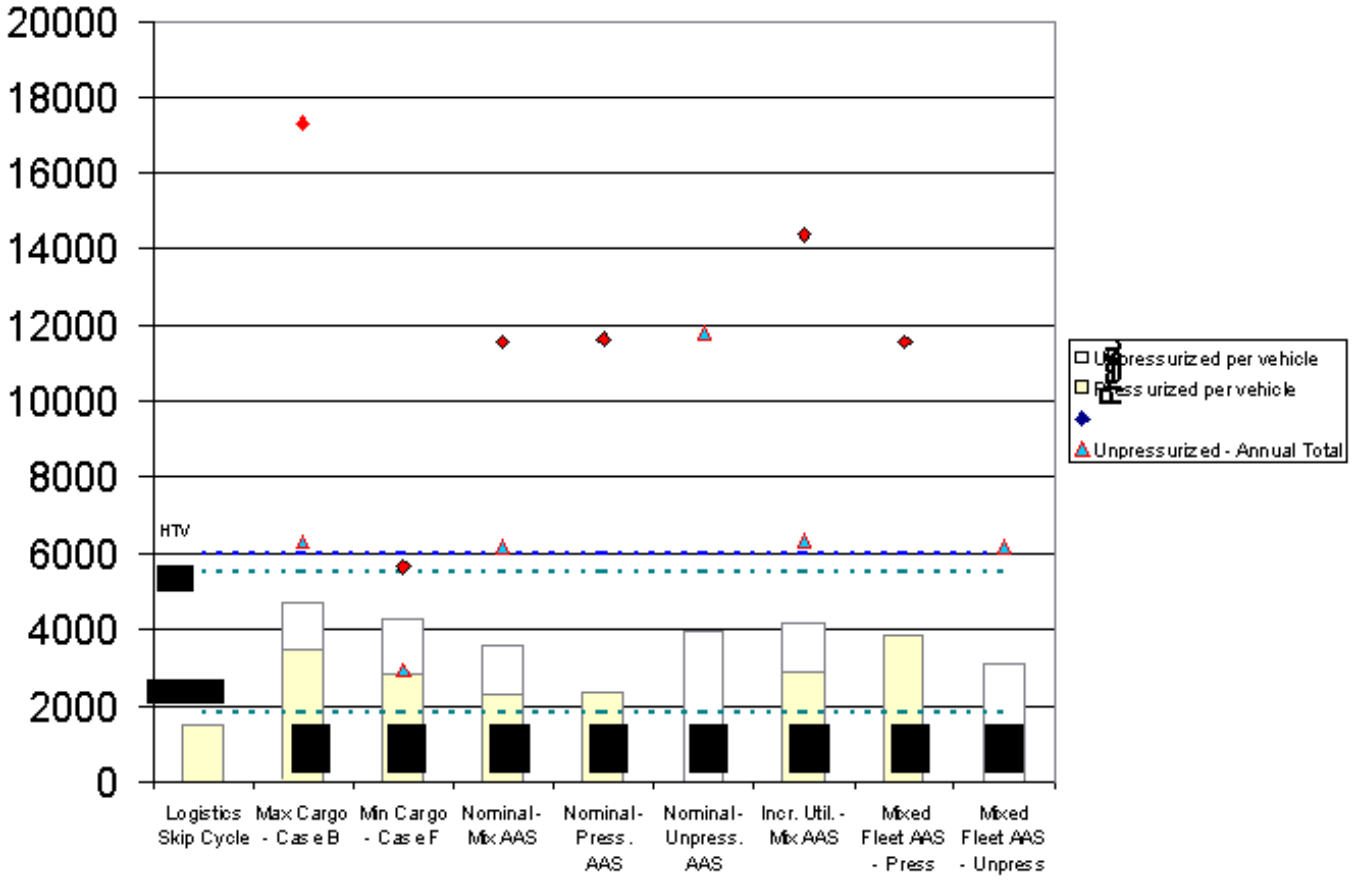

Traffic Model Results

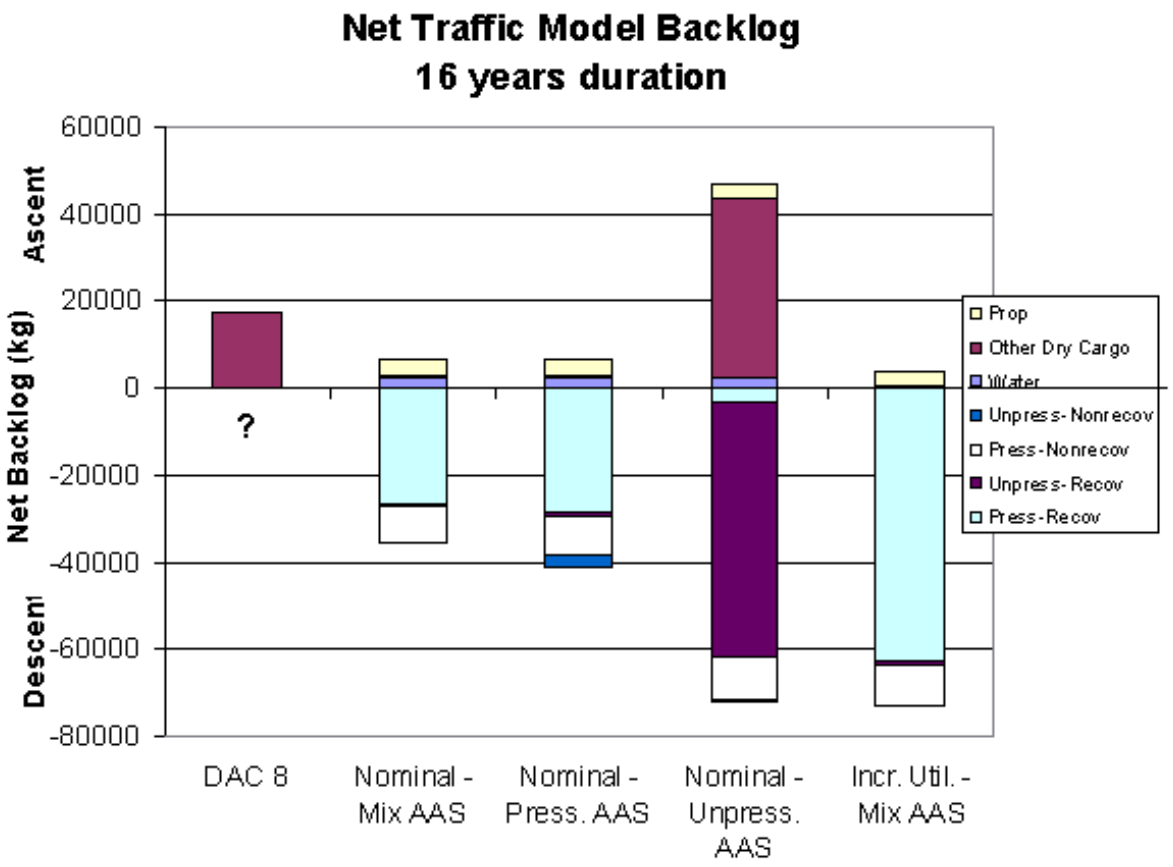

Design Reference Missions (DRMs) – Submitted

DRM ID	AAS 1	AAS 2 - Max	AAS 3 - Min	AAS 4	AAS 5
Description	Logistics Skip Cycle Support	All cargo - mixed maximum cargo (case B Traffic Model)	All cargo - mixed minimum cargo (case F Traffic Model)	Passive cargo - mixed maximum cargo (case B Traffic Model)	Passive cargo - mixed minimum cargo (case F Traffic Model)
Cargo - Major Type	Systems	Systems and Utilization	Systems and Utilization	Systems and Utilization	Systems and Utilization
Cargo - Minor Type	Resupply & Maintenance	Full cargo Matrix	Full cargo Matrix	Full cargo Matrix	Full cargo Matrix
Carrier Type	Pressurized - Passive	Pressurized Unpressurized	Pressurized Unpressurized	Pressurized - Passive Unpressurized - Passive	Pressurized - Passive Unpressurized - Passive
Total Mass (cargo and accommodations) kg	Press - 1500	Press - 3460 Unpress -1260	Press -2830 Unpress - 1470	Press - 3460 Unpress -1260	Press -2830 Unpress - 1470
Total Volume (cargo and accommodations) Press: CTBE Unpress: ft^3	Press - 90	Press - 205 Unpress - 70	Press - 170 Unpress - 80	Press - 205 Unpress - 70	Press - 170 Unpress - 80
ISS Transfer Method	IVA	IVA and EVR	IVA and EVR	IVA and EVR	IVA and EVR
ISS Attach period	Min ~ 6 days Max ~ 35 days	Min ~ ~~8~~ 10 days Max ~ 35 days	Min ~ ~~11~~ 9 days Max ~ 21 days	Min ~ ~~8~~ 10 days Max ~ 35 days	Min ~ ~~11~~ 9 days Max ~ 21 days
Cargo Support Requirements					
Ground	N/A	Power Cooling Data	Power Cooling Data	N/A	N/A
Launch Pad	N/A	Power Cooling Data Late Access	Power Cooling Data Late Access	N/A	N/A
Ascent/Pre-transfer	N/A	Power Cooling Data	Power Cooling Data	N/A	N/A
Post Transfer (down cargo)	N/A	N/A	N/A	N/A	N/A
Post landing (down cargo)	N/A	N/A	N/A	N/A	N/A

Design Reference Missions (DRMs) – Submitted

DRM ID	AAS 1	AAS 2 - Max	AAS 3 - Min	AAS 4	AAS 5
Cargo Qualification Limits	Pressurized Load Factors N(x) +/- 9.0 g N(y) +/- 11.6 g N(z) +/- 9.9 g Thermal 20 to 26.7 C	Pressurized Load Factors N(x) +/- 9.0 g N(y) +/- 11.6 g N(z) +/- 9.9 g Thermal 20 to 26.7 C Unpressurized Load Factors N(x) +/- 10.0 g N(y) +/- 2.5 g N(z) +/- 2.5 g Thermal -43 to 71 C	Pressurized Load Factors N(x) +/- 9.0 g N(y) +/- 11.6 g N(z) +/- 9.9 g Thermal 20 to 26.7 C Unpressurized Load Factors N(x) +/- 10.0 g N(y) +/- 2.5 g N(z) +/- 2.5 g Thermal -43 to 71 C	Pressurized Load Factors N(x) +/- 9.0 g N(y) +/- 11.6 g N(z) +/- 9.9 g Thermal 20 to 26.7 C Unpressurized Load Factors N(x) +/- 10.0 g N(y) +/- 2.5 g N(z) +/- 2.5 g Thermal -43 to 71 C	Pressurized Load Factors N(x) +/- 9.0 g N(y) +/- 11.6 g N(z) +/- 9.9 g Thermal 20 to 26.7 C Unpressurized Load Factors N(x) +/- 10.0 g N(y) +/- 2.5 g N(z) +/- 2.5 g Thermal -43 to 71 C
Cargo Hazard Level	Fluids Chemicals	Fluids Compressed Gas Biologicals Chemicals Combustibles Fragiles	Fluids Compressed Gas Biologicals Chemicals Combustibles Fragiles	Fluids Compressed Gas Biologicals Chemicals Combustibles Fragiles	Fluids Compressed Gas Biologicals Chemicals Combustibles Fragiles
Response Period					
ID to Cargo available	Under review	Under review	Under review	Under review	Under review
ID to on-board ISS	40 days	Under review	Under review	Under review	Under review
Cargo Transfer Location	KSC	KSC	KSC	KSC	KSC
Cargo Return Location	KSC	KSC	KSC	KSC	KSC
Flights per Year	N/A	5	2	5	2

Design Reference Missions (DRMs) – Additional

DRM ID	AAS 6	AAS 7	AAS 8	AAS 9	AAS Descent 1	AAS Descent 2
Description	Nominal Case - Mixed cargo	Nominal Case - Pressurized only	Nominal Case - Unpressurized Only	Nominal Case - Mixed Flee for Press only and Unpress only	Descent all cargo - non recoverable	Descent all cargo - recoverable
Cargo - Major Type	Systems and Utilization	Systems and Utilization	Systems and Utilization	Systems and Utilization	Systems and Utilization	Systems and Utilization
Cargo - Minor Type	Full cargo Matrix	Full cargo Matrix	Full cargo Matrix	Full cargo Matrix	Full cargo Matrix	Full cargo Matrix
Carrier Type	Pressurized Unpressurized	Pressurized Unpressurized	Pressurized Unpressurized	Pressurized Unpressurized	Pressurized Unpressurized	Pressurized
Total Mass (cargo and accommodations) kg	Press - 2300 Unpress - 1230	Press - 2330	Unpress - 3940	Press - 3850 Unpress - 3090	Press - 10550 annual avg Unpress - 2300 annual avg	Press - 3000 annual avg
Total Volume (cargo and accommodations) Press: CTBE Unpress: ft^3	Press - 140 Unpress - 70	Press - 140	Unpress - 220	Press - 230 Unpress - 170	Press - 620 annual avg Unpress - 130 annual avg	Press - 177 annual avg
ISS Transfer Method	N/A and EVR	N/A	EVR	N/A and EVR	N/A and EVR	N/A
ISS Attach period	Min ~ 8 days Max ~ 35 days	Min ~ 6 days Max ~ 35 days	Min ~ 5 days Max ~ 35 days	Min ~ 4 days unpress Min ~ 10 days press Max ~ 35 days	Attach period included as part of ascent DRM	Attach period included as part of ascent DRM
Cargo Support Requirements						
Ground	Power Cooling Data	Power Cooling Data	Power Data	Power Cooling Data	N/A	N/A
Launch Pad	Power Cooling Data	Power Cooling Data	Power Data	Power Cooling Data	N/A	N/A
Ascent/Pre-transfer	Power Cooling Data	Power Cooling Data	Power Data	Power Cooling Data	N/A	N/A
Post Transfer (down cargo)	N/A	N/A	N/A	N/A	N/A	Power Cooling Data
Post landing (down cargo)	N/A	N/A	N/A	N/A	N/A	Power Cooling Data Early Access

Design Reference Missions (DRMs) – Additional

DRM ID	AAS 6	AAS 7	AAS 8	AAS 9	AAS Descent 1	AAS Descent 2
Cargo Qualification Limits	Pre nurtized Load Factors N(x) +/- 9.0 g N(y) +/- 11.6 g N(z) +/- 9.9 g Thermal 20 to 26.7 C Unpre nurtized Load Factors N(x) +/- 10.0 g N(y) +/- 2.5 g N(z) +/- 2.5 g Thermal -43 to 71 C	Pre nurtized Load Factors N(x) +/- 9.0 g N(y) +/- 11.6 g N(z) +/- 9.9 g Thermal 20 to 26.7 C	Unpre nurtized Load Factors N(x) +/- 10.0 g N(y) +/- 2.5 g N(z) +/- 2.5 g Thermal -43 to 71 C	Pre nurtized Load Factors N(x) +/- 9.0 g N(y) +/- 11.6 g N(z) +/- 9.9 g Thermal 20 to 26.7 C Unpre nurtized Load Factors N(x) +/- 10.0 g N(y) +/- 2.5 g N(z) +/- 2.5 g Thermal -43 to 71 C	N/A	Pre nurtized Load Factors N(x) +/- 9.0 g N(y) +/- 11.6 g N(z) +/- 9.9 g Thermal 20 to 26.7 C
Cargo Hazard Level	Fluids Compressed Gas Biologicals Chemicals Combustibles Fragiles	Fluids Compressed Gas Biologicals Chemicals Combustibles Fragiles	Fluids Compressed Gas Biologicals Chemicals Combustibles Fragiles	Fluids Compressed Gas Biologicals Chemicals Combustibles Fragiles	Fluids Compressed Gas Biologicals Chemicals Combustibles Fragiles	Fluids Compressed Gas Biologicals Chemicals Combustibles Fragiles
Response Period						
ID to Cargo available	Under review	Under review	Under review	Under review	N/A	N/A
ID to on-board ISS	Under review	Under review	Under review	Under review	N/A	N/A
Cargo Transfer Location	KSC	KSC	KSC	KSC	N/A	N/A
Cargo Return Location	KSC	KSC	KSC	KSC	N/A	KSC
Flights per Year	5	5	3	3 Pressurized 2 Unpressurized	Flight rate determined by ascent DRM	Flight rate determined by ascent DRM

AAS Requirements Document Outline

- 1. Introduction
- 2. Purpose
- 3. Scope
- 4. Assumptions
- 5. Cargo Templates
- 6. Cargo Transfer to Service provider
- 7. Design Reference Missions
- 8. Other Requirements and Limitations
- 9. Acronyms
- 10. Definitions
- 11. Reference Documents

Draft available for general review January 18th

AAS Final Report Outline

- Background
- Assumptions / Rationale
- Cargo Matrix / Supporting data sorts
- Traffic Model Analysis Results / Rationale
- Design Reference Missions / Rationale
- Other Requirements and Limitations
- Definitions
- Performance Requirements Document
- Verification Table
- Reference Library

Resolved Issues

- No changes since mid-term review

Open Issues

- No APAS docking ground rule
- Recoverable descent backlog
- Cargo phasing concerns

No APAS Docking Ground Rule Issue Status

- Issue is in work
- AAS team coordinating with OM / M. Lutomski to generate OM office memo to send to OA / B. Gerstenmaier to make APAS ports available for AAS
  - ECD January 14th

Recoverable Descent Backlog Issue Status

- TM analyses, including DAC 8, indicate recoverable cargo backlog increasing over time
- TM does not "optimize" recoverable cargo requirements
- Descent requirements are determined based on a percentage of ascent requirements
  - Program requirements are changing (anticipate a net decrease) based on current ISS experience
  - US Payloads/Systems, to date, have always recovered their hardware
  - To date, Shuttle launches with MPLM have not fully utilized ascent performance margins, which could potentially allow flying empty RSP/RSRs for use on return
- Conclusion
  - Recoverable cargo backlog may not be as large of a problem as it seems

Cargo Phasing Concerns Status

- Cargo preferably needs to be delivered in regularly spaced intervals
  - Some resupply items have expiration dates
  - Prevents a large spike in the on-orbit stowage requirement
- Cargo phasing should be taken into account when sizing the AAS vehicle and determining the flight rate

Future Work

- ECD January 18th
  - Continue to incorporate data into the cargo matrix (90% complete)
  - Complete development of the full range of DRMs (90% complete)
    - Determine cargo supply timelines
    - Determine cargo power, cooling, and data requirements
    - Determine cargo packing distribution (bag sizes, middeck locker sizes, etc.)
  - Resolve remaining open issues

- ECD February 5th
  - Complete development of final product deliveries
    - Final Report
    - AAS Performance Requirements Document
    - Reference Library

- Conduct Final Review at MSFC (February 7th)

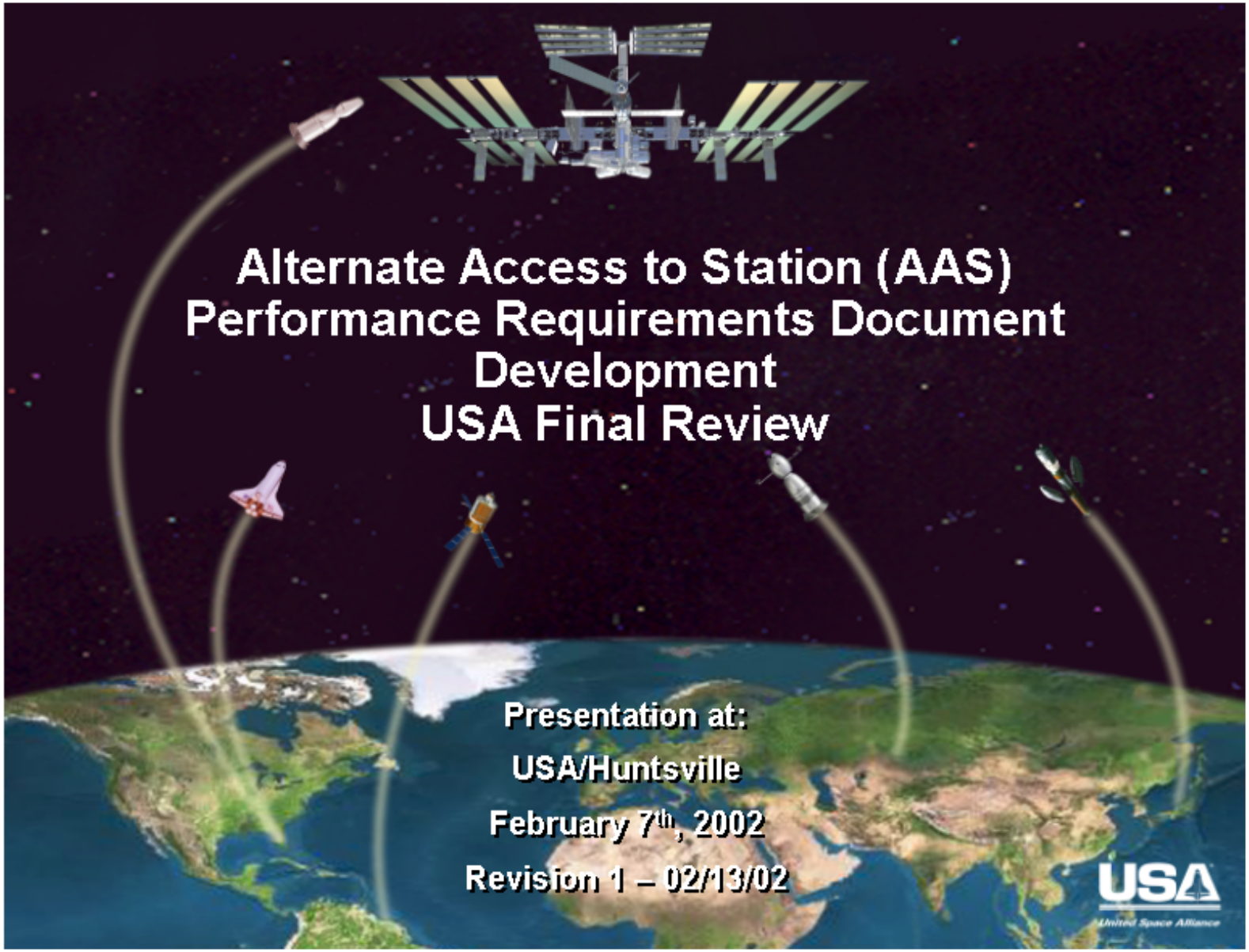
Alternate Access to Station (AAS)
Performance Requirements Document
Development
USA Final Review
Presentation at:
USA/Huntsville
February 7th, 2002
Revision 1 – 02/13/02
USA
United Space Alliance

Today's Plan

- AM Session – Final Presentation
- Lunch (on your own)
- PM Session
  - Question and Answer
  - Detailed Discussions

Safety – Building Floor plan

USA - 555 Discovery Drive Facility

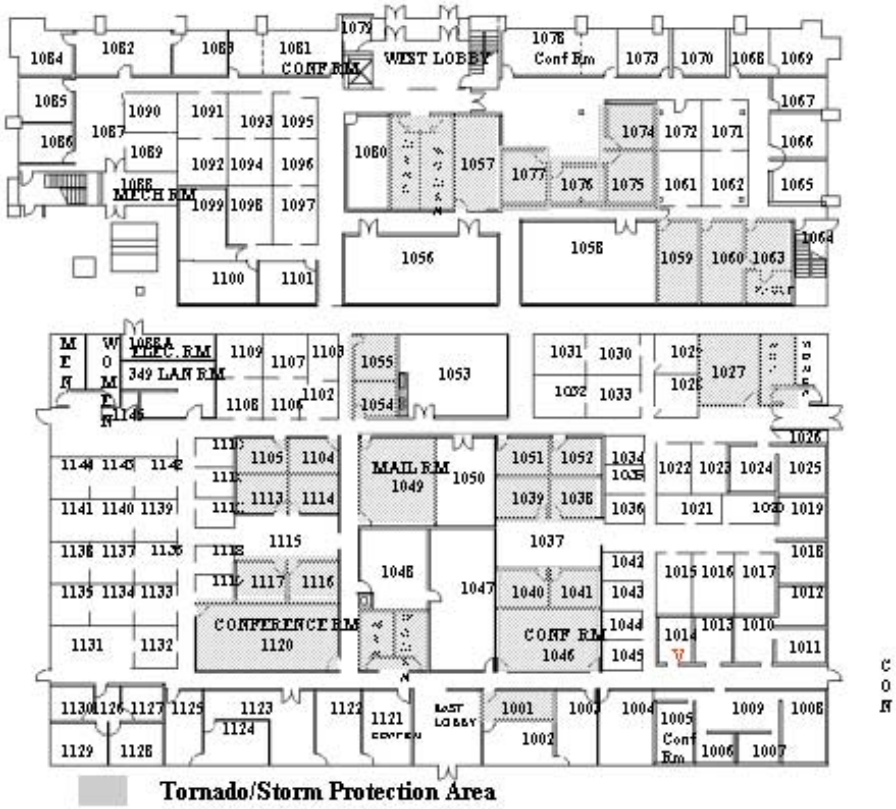

Safety Tip - Present Moment Thinking

- **Many injuries, incidents, and close calls are a direct result of human behavior**
  - This does not mean that unsafe conditions are not a part of incidents however how we respond to those unsafe conditions is a result of human behavior
- **Living in the present, paying attention, and being alert will help employees avoid behavior based incidents**
  - Many of us are often times either living in the past -- thinking about something that happened earlier or living in the future -- thinking about something that is going to happen
  - Living somewhere else other than the present leads to distraction which can unfortunately often times lead to accidents
- **Live in the Present -- Take time to think about what you are doing**
  - Evaluate your environment or the situation
  - Think about the consequences of what you are about to undertake
  - Use all of your senses
  - Take appropriate safety precautions
  - Call a time-out if something does not seem right

Purpose

- Perform final formal review of the AAS Performance Requirements Study Activity
  - Provide schedule and budget performance projections
  - Ensure all Action Items have been adequately addressed and closed
  - Review major issues/discussion topics encountered during the study
  - Present significant information/data/results changes since the last review
  - Review product status
- Discuss AAS Performance Requirements
- Review closeout activity for the AAS Performance Requirements Study and the plan for continuing support to MSFC AAS and Space Launch Initiative (SLI) development

Contents

- **Schedule Review**
- Action Items and Issues
- Definitions Update
- Process
- Traffic Modeling
- Cargo Matrix
- PRD – Baseline Concepts
- PRD – Cargo
- PRD – Cargo Ground Processing
- PRD – DRMs
- PRD – Other Requirements and Limitations
- Product Status
- Study Completion and Continuing Support

Schedule Highlights

- ATP – 10/26/01 (Complete)
- Booze Allen Hamilton Task Order – 11/05/01 (Complete)
- Space America under contract – 11/14/01 (Complete)
- Project Work Plan Review at MSFC – 11/15/01 (Complete)
- Midterm Review at JSC – 12/13/01 (Complete)
- Interim Review Videoconference – 01/11/02 (Complete)
- **Final Review at MSFC – 02/07/02 (Today)**
- **Performance Requirements Document and Final Report – 02/15/02**

Progress Since Last Review

- Cargo matrix data incorporation complete
- DRM development complete
- All open issues resolved
- Development of final product deliveries (less updates from this review)
  - AAS Performance Requirements Document
  - Final Report (data acquisition complete and word processing in work)
    - Cargo Matrix
    - Reference Library

AAS Work Plan

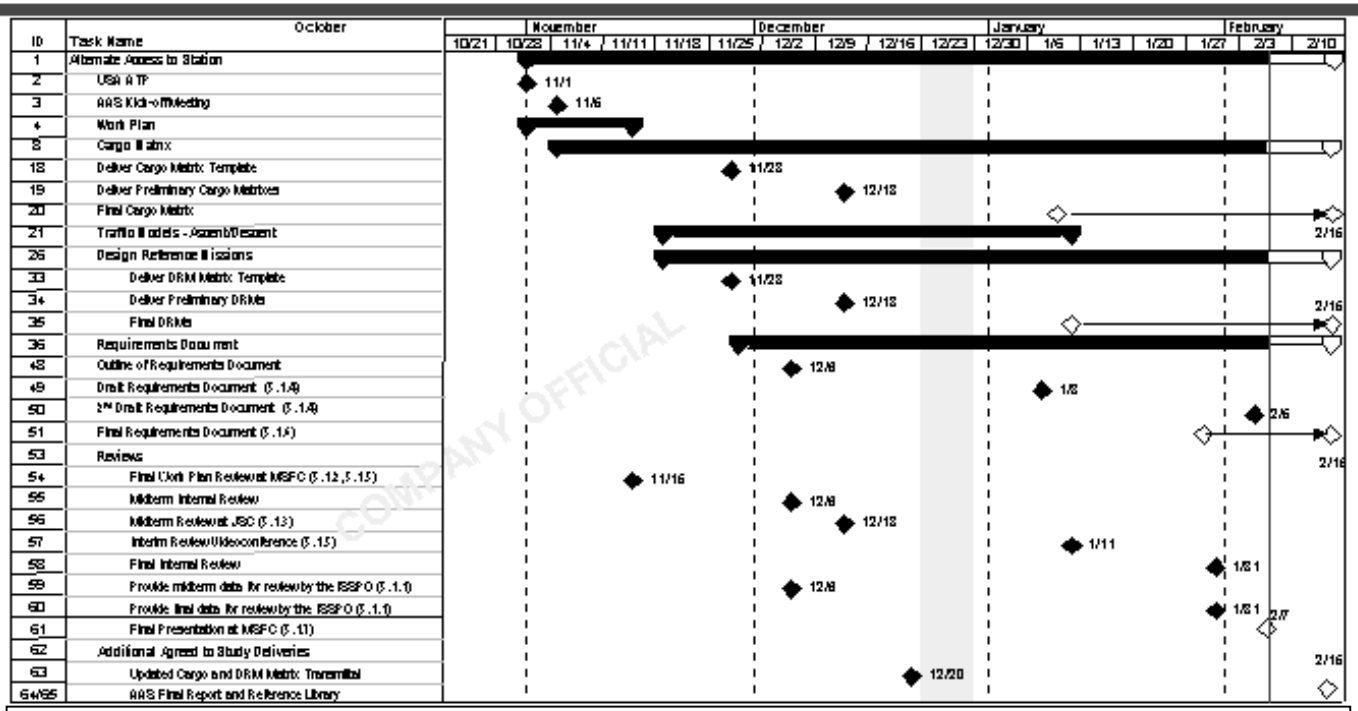

Budget data has been omitted.

COMPANY OFFICIAL
(NOT To Be Disclosed To
Unauthorized Persons)

United Space Alliance

Contents

- Schedule Review
- **Action Items and Issues**
- Definitions Update
- Process
- Traffic Modeling
- Cargo Matrix
- PRD – Baseline Concepts
- PRD – Cargo
- PRD – Cargo Ground Processing
- PRD - DRMs
- PRD – Other Requirements and Limitations
- Product Status
- Study Completion and Continuing Support

Action Item Status

ID	Description	Assigned	Closed	Closure Rationale
01	Document basis for study assumptions in final report	12/13/01	02/07/02	Provided in Draft Final Report
02	Define two passive DRMs next week (electronic delivery)	12/13/01	12/20/01	As requested, two additional DRMs for the passive cases were provided to the MSFC AAS Office on 12-20-01.
03	Identify all reference documents in the Requirements Document	12/13/01	02/05/02	Provided in Draft AAS Performance Requirements Document delivered on Feb 5th via e-mail
04	Provide reference regarding Rapid Response capability (top/down bottom/up analysis, FEMA/CIL)	12/13/01	02/07/02	Provided in Draft Final Report
05	Re-label "business case" as "nominal case"	12/13/01	01/11/02	Note DRM Matrix provided initially at the AAS Interim Review and in use now. All descriptions now utilize terminology "nominal".
06	Delete the 5 Shuttle flights/year from the nominal traffic model case and replace with 3 and 2 Progress cases; Address cases as priority permits.	12/13/01	01/11/02	Note DRM Matrix provided at the AAS Interim Review. Traffic Model K – Nom, 3 Progress presented a three (3) Progress scenario. This scenario was ruled out for further investigation because it resulted in a negative ISS propellant margin.
07	Provided description of possible mounting areas on the truss (envelopes/restrictions) in the final report	12/13/01	02/07/02	Provided in Draft Final Report
08	Provide, if possible, some additional data on the HTV and ATV	01/11/02	02/07/02	Provided in Draft Final Report
09	Take a closer look at the pressurized temperature constraints that we have in the DRMs	01/11/02	02/07/02	Provided in Draft Final Report
10	Provide info in the Final report that states what the 'sensitivity" studies did for us. What were the perturbations, What did we learn	01/11/02	02/07/02	Provided in the Final Review Presentation – Traffic Modeling Results. This chart indicates that the Nominal Mixed Case, the Minimum case and the Maximum Case spread covers all plausible scenarios
11	Take another look at the Payloads "limiting resources". Are we sure that the 30% addition to get to the next limiting resource is correct. Is it a Station constraint	01/11/02	02/05/02	Provided in Draft AAS Performance Requirements Document delivered on Feb 5th via e-mail
12	Provide more info on the ISS Risk associated with Stowage	01/11/02	02/07/02	Provided via e-mail from John Selmarten, USA ISS Payloads Office
13	Address solicitation questions submitted by J. Poe	01/28/02	01/28/02	As requested, these questions were addressed and the answers submitted that afternoon to the MSFC AAS Office on 01-28-02.

Resolved Issues

- Recoverable descent backlog (with currently planned capabilities)
  - Analysis finds that by optimizing recovery on STS, the backlog may not be as significant as previously believed
- Cargo phasing concerns
  - Cargo needs to be delivered at regular intervals to minimize ageing and stowage issues
- No propellant delivery ground rule
  - Propellant delivery would complicate AAS, depend upon docking at Russian module, and reduce other cargo capacity. Good ground rule.
- ISS resources available to AAS
  - Will be available. Allocations will be negotiated during detail design

Resolved Issues (concluded)

- ISS attach time
  - Min and Max time developed. Prefer to stay attached max to use for storage space
- Berth at SSRMS or JEM RMS (i.e., used as attach location for on-orbit ops)
  - Not technically or operationally feasible
  - This does not preclude the use of the SSRMS for berthing operations associated with attaching the AAS on-orbit vehicle to the CBM or other approved attach point
- ATV and HTV availability date
  - Expect to be in steady state ops, past infant mortality, prior to AAS operational phase
- No APAS docking ground rule
  - Verbal received via NASA OM from W. Gerstenmaier that APAS may be used

Contents

- Schedule Review
- Action Items and Issues
- **Definitions Update**
- Process
- Traffic Modeling
- Cargo Matrix
- PRD – Baseline Concepts
- PRD – Cargo
- PRD – Cargo Ground Processing
- PRD - DRMs
- PRD – Other Requirements and Limitations
- Product Status
- Study Completion and Continuing Support

AAS Definitions Updates

- AAS System: The integrated end-to-end system supporting Alternate Access to Station. This includes launch vehicle, orbital vehicle, launch facilities, payload processing facilities, ground control, etc.
- AAS Orbital Transfer Element: The specific flight element that carries the cargo and is attached to the ISS.
- AAS Vehicle: Any or all of the flight elements included in the AAS system. This includes launch vehicle, orbital transfer element, reentry vehicle, etc.
- Internal Cargo: Cargo whose final installed/consumed/used location must be protected from the space environment. This cargo typically must be protected from the space environment during the transportation phase.
- External Cargo: Cargo whose final installed location will be on the external surface of the ISS and will be exposed to the space environment.
- Pressurized Vehicle: A vehicle that carries internal cargo and protects that cargo from the space environment.
- Unpressurized Vehicle: A vehicle that carries external cargo exposed (partially or totally) to the space environment.

Contents

- Schedule Review
- Action Items and Issues
- Definitions Update
- **Process**
- Traffic Modeling
- Cargo Matrix
- PRD – Baseline Concepts
- PRD – Cargo
- PRD – Cargo Ground Processing
- PRD – Other Requirements and Limitations
- Product Status
- Study Completion and Continuing Support

Study Process

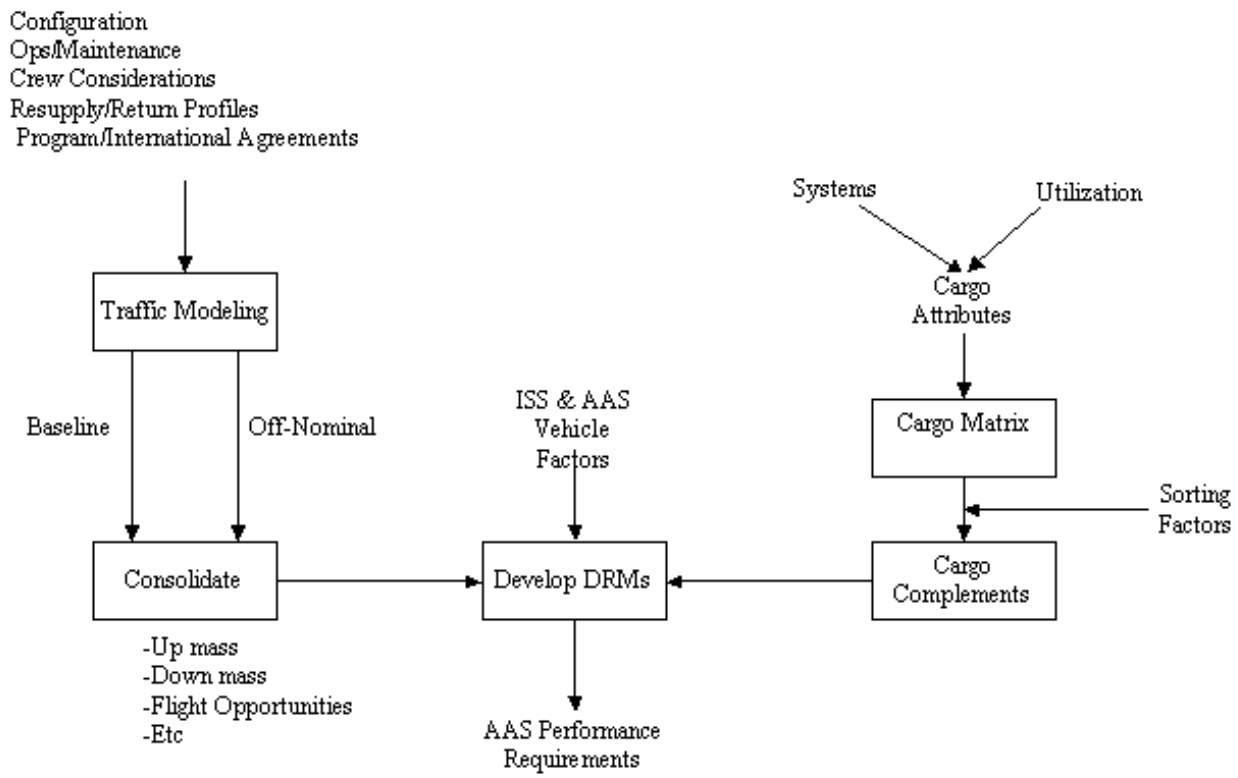

Contents

- Schedule Review
- Action Items and Issues
- Definitions Update
- Process
- **Traffic Modeling**
- Cargo Matrix
- PRD – Baseline Concepts
- PRD – Cargo
- PRD – Cargo Ground Processing
- PRD - DRMs
- PRD – Other Requirements and Limitations
- Product Status
- Study Completion and Continuing Support

Traffic Modeling

- **Objective**
  - Perform ISS resupply/return traffic model analyses to support requirements definition for an alternate access to station vehicle
- **Method**
  - Used ISS PO DAC 8 traffic model (TM) as initialization point
    - Modified DAC 8 TM to reflect ISS assembly sequence, rev F (minus US prop module)
    - Reduced shuttle flight rate from 5 per year to 4 per year
  - 7 additional scenarios analyzed
  - 1st created model of scenario without AAS vehicle to determine average annual delivery backlog
  - Estimated required AAS performance characteristics and flight rate required to eliminate delivery backlog while maintaining an overall flight rate that supports ISS micro-g quiescent period requirement
  - Developed model of required AAS and added to traffic model
  - Executed model to determine average and maximum cargo delivered on assumed ASS and to confirm ISS delivery backlog is eliminated
  - Used results to develop AAS DRMs to be used for AAS concept development

Traffic Model Scenarios

- Minimum Cargo scenario assumes "nominal" fleet of existing ISS resupply vehicles with no failures
- Maximum Cargo scenario assumes 4 Shuttle flights/year plus minimum number of Progress vehicles required to meet propellant requirements
  - Assumes no ATV or HTV flights
- Nominal scenarios generally assume 10% failure in expendable vehicles plus one Shuttle flight skipped every 3 years due to launch slips

TRAFFIC MODEL CAVEATS

- Traffic Model Tool does not attempt to Optimize Solution
- No attempt was made to mitigate return cargo backlog
  - Further analysis could be performed to reduce backlog by manually manifesting empty cargo accommodations on vehicles with ascent performance margin
- No attempt was made to increase vehicle efficiencies through schedule adjustments to initial TM solution
  - Vehicle efficiencies are generally lower when the delivery backlog is eliminated because there are limited cargo choices for a given manifest
- Uncertainty in ISS resupply/return requirements
  - Some requirements substantiated or updated based on flight experience (e.g., crew supplies)
  - Other requirements do not have sufficient flight experience for validation (e.g., MTBF of ORUs)
  - Tare weights of ISS carriers and accommodations are under review and probably lower in the TM than the actual tare weights

Potential Traffic Model Assessments

Crew Size	ISS Configuration					
	Core with IP vehicles	Core without IP vehicles	Accommodations for 6 with IP vehicle	Accommodations for 6 without IP vehicle	Enhanced with IP vehicles	Enhanced without IP vehicles
3	Three Crew ISS core case with IP vehicles	Three Crew ISS core case without IP vehicles				
6			Six Crew ISS case with IP vehicles	Six Crew ISS case without IP vehicles		
7					Minimum Cargo case Nominal case with Mixed Cargo Nominal case with Internal Cargo Nominal case with External Cargo Nominal case with Increased Utilization Nominal case with Decreased Progress Flights	Maximum Cargo Case

Gray shaded cells represent TM cases or potential cases that were not analyzed

Potential Traffic Model Assessments

Crew Size	ISS Configuration					
	Core with IP vehicles	Core without IP vehicles	Accommodations for 6 with IP vehicle	Accommodations for 6 without IP vehicle	Enhanced with IP vehicles	Enhanced without IP vehicles
3	Three Crew ISS core case with IP vehicles	Three Crew ISS core case without IP vehicles				
6			Six Crew ISS case with IP vehicles	Six Crew ISS case without IP vehicles		
7					Minimum Cargo case Nominal case with Mixed Cargo Nominal case with Internal Cargo Nominal case with External Cargo Nominal case with Increased Utilization Nominal case with Decreased Progress Flights	Maximum Cargo Case

Gray shaded cells represent TM cases or potential cases that were not analyzed

- Three Crew ISS core case with IP vehicles
  - Case intended to meet requirements of a Core ISS with three crewmembers only with the use of IP vehicles
  - This case was excluded after initial ISS DAC 8 analyses indicated that there was no anticipated up mass shortfall with a three person ISS crew.

Potential Traffic Model Assessments

Crew Size	ISS Configuration					
	Core with IP vehicles	Core without IP vehicles	Accommodations for 6 with IP vehicle	Accommodations for 6 without IP vehicle	Enhanced with IP vehicles	Enhanced without IP vehicles
3	Three Crew ISS core case with IP vehicles	Three Crew ISS core case without IP vehicles				
6			Six Crew ISS case with IP vehicles	Six Crew ISS case without IP vehicles		
7					Minimum Cargo case Nominal case with Mixed Cargo Nominal case with Internal Cargo Nominal case with External Cargo Nominal case with Increased Utilization Nominal case with Decreased Progress Flights	Maximum Cargo Case

Gray shaded cells represent TM cases or potential cases that were not analyzed

- Three Crew ISS core case without IP vehicles
  - Case intended to meet requirements of a Core ISS with three crewmembers only without the use of IP vehicles
  - This case was excluded after initial ISS DAC 8 analyses indicated that there was no anticipated up mass shortfall with a three person ISS crew.

Potential Traffic Model Assessments

Crew Size	ISS Configuration					
	Core with IP vehicles	Core without IP vehicles	Accommodations for 6 with IP vehicle	Accommodations for 6 without IP vehicle	Enhanced with IP vehicles	Enhanced without IP vehicles
3	Three Crew ISS core case with IP vehicles	Three Crew ISS core case without IP vehicles				
6			Six Crew ISS case with IP vehicles	Six Crew ISS case without IP vehicles		
7					Minimum Cargo case Nominal case with Mixed Cargo Nominal case with Internal Cargo Nominal case with External Cargo Nominal case with Increased Utilization Nominal case with Decreased Progress Flights	Maximum Cargo Case

Gray shaded cells represent TM cases or potential cases that were not analyzed

- Six Crew ISS case with IP vehicles
  - Case intended to meet requirements of an ISS with accommodations for six crewmembers only and with the use of IP vehicles
  - Initially excluded after assessments indicated that the three person and seven person TM cases bounded these requirements
  - Final exclusion after recognition that CRV availability would result in 7 person crew. AAS should support max ISS manning

Potential Traffic Model Assessments

Crew Size	ISS Configuration					
	Core with IP vehicles	Core without IP vehicles	Accommodations for 6 with IP vehicle	Accommodations for 6 without IP vehicle	Enhanced with IP vehicles	Enhanced without IP vehicles
3	Three Crew ISS core case with IP vehicles	Three Crew ISS core case without IP vehicles				
6			Six Crew ISS case with IP vehicles	Six Crew ISS case without IP vehicles		
7					Minimum Cargo case Nominal case with Mixed Cargo Nominal case with Internal Cargo Nominal case with External Cargo Nominal case with Increased Utilization Nominal case with Decreased Progress Flights	Maximum Cargo Case

Gray shaded cells represent TM cases or potential cases that were not analyzed

- Six Crew ISS case without IP vehicles
  - Case intended to meet requirements of an ISS with accommodations for six crewmembers only and without the use of IP vehicles
  - Initially excluded after assessments indicated that the three person and seven person TM cases bounded these requirements.
  - Final exclusion after recognition that CRV availability would result in 7 person crew. AAS should support max ISS manning

Potential Traffic Model Assessments

Crew Size	ISS Configuration					
	Core with IP vehicles	Core without IP vehicles	Accommodations for 6 with IP vehicle	Accommodations for 6 without IP vehicle	Enhanced with IP vehicles	Enhanced without IP vehicles
3	Three Crew ISS core case with IP vehicles	Three Crew ISS core case without IP vehicles				
6			Six Crew ISS case with IP vehicles	Six Crew ISS case without IP vehicles		
7					Minimum Cargo case ~~Nominal case with~~ Mixed Cargo Nominal case with Internal Cargo Nominal case with External Cargo Nominal case with Increased Utilization Nominal case with Decreased Progress Flights	Maximum Cargo Case

Gray shaded cells represent TM cases or potential cases that were not analyzed

- Minimum Cargo Case
  - Minimum need for an AAS vehicle and lowest annual cargo requirements for AAS
  - Shuttle logistics flight rate of 4 per year with 1 CRV flight every 3 years
    - Shuttle flights include 1 external cargo flight per year and 3 mixed (internal/external cargo) flights per year.
  - Required adding 2 AAS flights per year to a modified baseline case.

Potential Traffic Model Assessments

Crew Size	ISS Configuration					
	Core with IP vehicles	Core without IP vehicles	Accommodations for 6 with IP vehicle	Accommodations for 6 without IP vehicle	Enhanced with IP vehicles	Enhanced without IP vehicles
3	Three Crew ISS core case with IP vehicles	Three Crew ISS core case without IP vehicles				
6			Six Crew ISS case with IP vehicles	Six Crew ISS case without IP vehicles		
7					Minimum Cargo case Nominal case with Mixed Cargo Nominal case with Internal Cargo Nominal case with External Cargo Nominal case with Increased Utilization Nominal case with Decreased Progress Flights	Maximum Cargo Case

Gray shaded cells represent TM cases or potential cases that were not analyzed

- **Maximum Cargo Case**
  - Maximum need for an AAS vehicle and maximum annual cargo requirements for AAS
  - Required eliminating use of the HTV and ATV
  - The shuttle rate is the same as the minimum case (The last scheduled shuttle flight in October of 2020 was scrubbed because the cargo upload demand was not great enough to justify the flight)
  - To meet ISS propellant requirements, Progress modeled with flight rate of 4 per year.

Potential Traffic Model Assessments

Crew Size	ISS Configuration					
	Core with IP vehicles	Core without IP vehicles	Accommodations for 6 with IP vehicle	Accommodations for 6 without IP vehicle	Enhanced with IP vehicles	Enhanced without IP vehicles
3	Three Crew ISS core case with IP vehicles	Three Crew ISS core case without IP vehicles				
6			Six Crew ISS case with IP vehicles	Six Crew ISS case without IP vehicles		
7					Minimum Cargo case Nominal case with Mixed Cargo Nominal case with Internal Cargo Nominal case with External Cargo Nominal case with Increased Utilization Nominal case with Decreased Progress Flights	Maximum Cargo Case

Gray shaded cells represent TM cases or potential cases that were not analyzed

- Nominal Case with Mixed Cargo
  - Failure rate of ~10% for HTV and ATV based on historical data for ELVs
  - 1 scheduled Shuttle flight every 3 years will not deliver cargo to the ISS due to schedule slips
  - Progress failure rate accounted for in the baseline cases by reducing the expected Progress launches from 6 to 4 vehicles per year
  - Mixed cargo complement (internal and external cargo)

Potential Traffic Model Assessments

Crew Size	ISS Configuration					
	Core with IP vehicles	Core without IP vehicles	Accommodations for 6 with IP vehicle	Accommodations for 6 without IP vehicle	Enhanced with IP vehicles	Enhanced without IP vehicles
3	Three Crew ISS core case with IP vehicles	Three Crew ISS core case without IP vehicles				
6			Six Crew ISS case with IP vehicles	Six Crew ISS case without IP vehicles		
7					Minimum Cargo case Nominal case with Mixed Cargo Nominal case with Internal Cargo Nominal case with External Cargo Nominal case with Increased Utilization Nominal case with Decreased Progress Flights	Maximum Cargo Case

Gray shaded cells represent TM cases or potential cases that were not analyzed

- Nominal Case with Internal Cargo
  - Flight rates similar to the nominal mixed case with exception that 1 unpressurized shuttle flight per year in place of a mixed shuttle flight
  - Internal cargo complement only

Potential Traffic Model Assessments

Crew Size	ISS Configuration					
	Core with IP vehicles	Core without IP vehicles	Accommodations for 6 with IP vehicle	Accommodations for 6 without IP vehicle	Enhanced with IP vehicles	Enhanced without IP vehicles
3	Three Crew ISS core case with IP vehicles	Three Crew ISS core case without IP vehicles				
6			Six Crew ISS case with IP vehicles	Six Crew ISS case without IP vehicles		
7					Minimum Cargo case Nominal case with Mixed Cargo Nominal case with Internal Cargo Nominal case with External Cargo Nominal case with Increased Utilization Nominal case with Decreased Progress Flights	Maximum Cargo Case

Gray shaded cells represent TM cases or potential cases that were not analyzed

- Nominal Case with External Cargo
  - Flight rates similar to the nominal mixed case with exception that shuttle flights only have the capability to carry internal cargo
  - External cargo complement only

Potential Traffic Model Assessments

Crew Size	ISS Configuration					
	Core with IP vehicles	Core without IP vehicles	Accommodations for 6 with IP vehicle	Accommodations for 6 without IP vehicle	Enhanced with IP vehicles	Enhanced without IP vehicles
3	Three Crew ISS core case with IP vehicles	Three Crew ISS core case without IP vehicles				
6			Six Crew ISS case with IP vehicles	Six Crew ISS case without IP vehicles		
7					Minimum Cargo case Nominal case with Mixed Cargo Nominal case with Internal Cargo Nominal case with External Cargo Nominal case with Increased Utilization Nominal case with Decreased Progress Flights	Maximum Cargo Case

Gray shaded cells represent TM cases or potential cases that were not analyzed

- Nominal Case with Increased Utilization
  - Flight rates similar to the nominal mixed case
  - Utilization requirement has been increased by 30%
  - Mixed cargo complement (internal and external cargo)

Potential Traffic Model Assessments

Crew Size	ISS Configuration					
	Core with IP vehicles	Core without IP vehicles	Accommodations for 6 with IP vehicle	Accommodations for 6 without IP vehicle	Enhanced with IP vehicles	Enhanced without IP vehicles
3	Three Crew ISS core case with IP vehicles	Three Crew ISS core case without IP vehicles				
6			Six Crew ISS case with IP vehicles	Six Crew ISS case without IP vehicles		
7					Minimum Cargo case Nominal case with Mixed Cargo Nominal case with Internal Cargo Nominal case with External Cargo Nominal case with Increased Utilization Nominal case with Decreased Progress Flights	Maximum Cargo Case

Gray shaded cells represent TM cases or potential cases that were not analyzed

- Nominal Case with Decreased Progress Flights
  - Flight rates similar to the nominal mixed case except that Progress flights reduced by 1 per year
  - Mixed cargo complement (internal and external cargo)

TM – Summary Results of Upmass Requirements

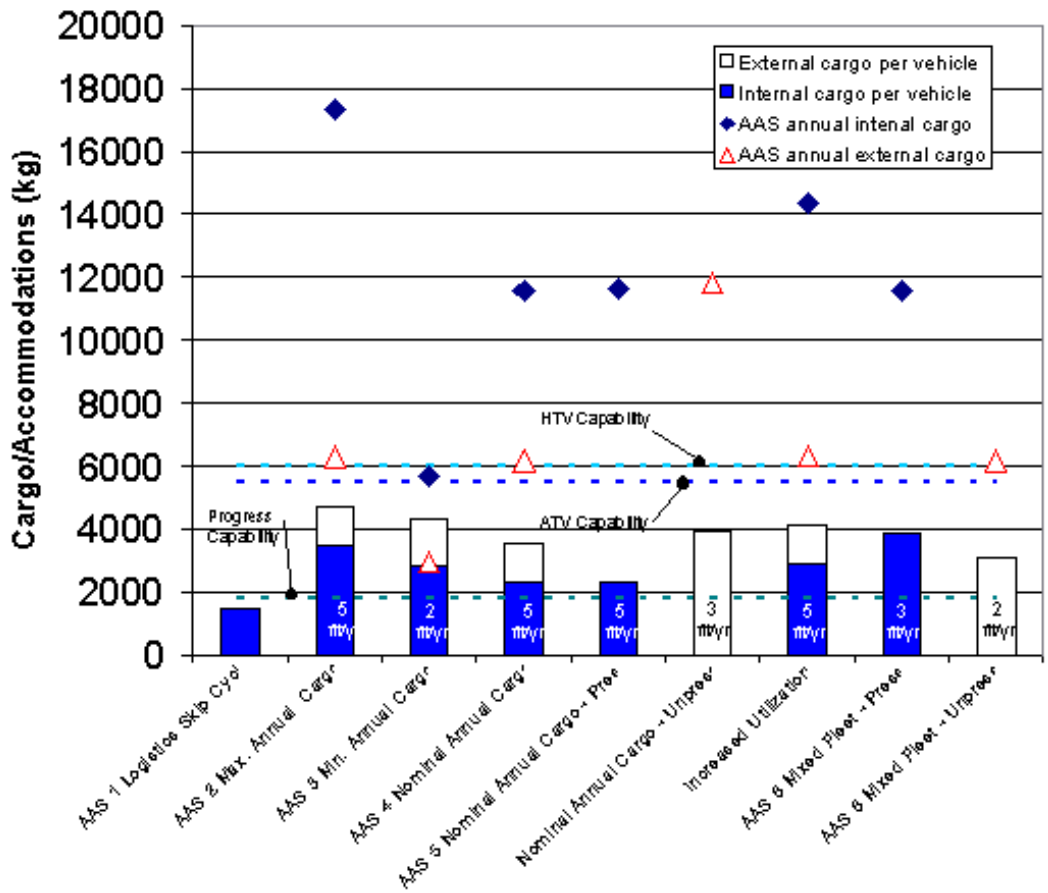

Contents

- Schedule Review
- Action Items and Issues
- Definitions Update
- Process
- Traffic Modeling
- **Cargo Matrix**
- PRD – Baseline Concepts
- PRD – Cargo
- PRD – Cargo Ground Processing
- PRD - DRMs
- PRD – Other Requirements and Limitations
- Product Status
- Study Completion and Continuing Support

Cargo Matrix Status

(Sample excerpt from Cargo Matrix)

Name	Major Type	Minor Type	Total Mass (no accomodations factor) lbs	Total Mass (no accomodations factor) kg	Total Volume (no accomodations factor) ft^3	Total Volume (no accomodations factor) m^3	length (external only) inches	Width (external only) inches	height (external only) inches
HRF-Dewar	Utilization	ULJSC	*60.0*	27.21	2	0.567	n/a	n/a	n/a
Temporary Equipment Restraint Aid (TERA)	System	Maintenance	42.95	19.48	18.63	0.528	77	19	22
HRF-ULF1-Resupply	Utilization	ULJSC	*97.0*	44		0.467	n/a	n/a	n/a
HEAT EXCHANGER	System	Maintenance	92.59	42.00	13.89	0.393	40	30	20
Depress/Repress Pump	System	Maintenance	210	95.25	13.75	0.389	36	60	11
FUEL CELL WATER TANK	System	Maintenance	159	72.12	13.46	0.381			
PFR Workstation Stanchion Assy	System	Maintenance	48.53	22.01	11.85	0.336	67.78	28.5	10.6
Articulating Portable Foot Restraint	System	Maintenance	63	28.58	10.85	0.307	25	25	30
Panel A, Electrical Assy (W11)	System	Maintenance	23	10.43	10.76	0.305	31	20	30
SPCU Maint. Kit	System	Maintenance	61	27.67	10	0.283			
HRF-STO4	Utilization	ULJSC	*224.0*	101.6		0.280	n/a	n/a	n/a
Tool Holder Assembly (THA)	System	Maintenance	58.8	26.67	9.04	0.256	26.7	26	22.5

Complete Cargo Matrix will be provided as part of the final report

AAS Requirements Document

- Draft Provided to MSFC
- Allowance is being made to make document updates as required based on results of this Final Review
- Delivery date is Friday, February 15, 2002
- Contents
  - Baseline Concept Requirements
  - Cargo Descriptions
  - Cargo Ground Processing
  - Design Reference Missions
  - Other Requirements and Limitations

Contents

- Schedule Review
- Action Items and Issues
- Definitions Update
- Process
- Traffic Modeling
- Cargo Matrix
- **PRD – Baseline Concepts**
- PRD – Cargo
- PRD – Cargo Ground Processing
- PRD – DRMs
- PRD – Other Requirements and Limitations
- Product Status
- Study Completion and Continuing Support

Baseline Concept Requirements

1) **Unmanned orbital transfer element**
2) **ISS altitude 278 to 460 km (150 to 248 n. mi.), inclination of 51.6 degrees**
3) **No changes to ISS adversely affecting performance or capabilities. No adverse impact on vehicles interfacing with the ISS.**
4) **AAS responsible for the purchase and integration of hardware for ISS compatibility**
   - Common Berthing Mechanism (CBM)
   - Flight Releasable Grapple Fixture (FRGF)
   - Power Data Grapple Fixture (PDGF)
   - Passive Flight Releasable Attachment Mechanism (FRAM)
   - etc.
5) **Orbital transfer element performs all maneuvers necessary to berth/dock**
6) **Will not provide ISS propellant delivery services**
7) **Will not provide attitude control or ISS reboost**
8) **Will have a space-to-space communication system compatible with the ISS**
9) **Will have a Guidance, Navigation and Control (GN&C) system commandable from the ISS while in proximity operations**

Baseline Concept Requirements (Continued)

10) External cargo transfers will be performed via Extravehicular Robotics (EVR)

11) ISS can provide resources to the AAS vehicle, depending on the mating location (limits on availability and allocation)

- Electrical power
- Atmospheric temperature and humidity control
- Command and Data Handling (C&DH)
- Thermal cooling fluids

12) AAS provides

- Launch sites and facilities for cargo integration
- Landing sites and facilities for cargo de-integration

13) ISS Program will determine the dates for AAS attached operations and time constraints for returnable cargo

14) AAS must be capable of delivering cargo to the ISS on any date, year round

15) AAS vehicle will not perform formation flight with the ISS

Baseline Concept Requirements (Completion)

16)The post assembly complete configuration of the ISS will reflect the Assembly Sequence, Revision F baseline with the exclusion of the Propulsion Module.

- All truss elements
- Columbus Operating Facility (COF)
- Japanese Experiment Module (JEM)
- Centrifuge Accommodation Module (CAM)
- Node 3
- Crew Return Vehicle (CRV)
- Hab Module
- Russian Segment with Science Power Platform (SPP)

Contents

- Schedule Review
- Action Items and Issues
- Definitions Update
- Process
- Traffic Modeling
- Cargo Matrix
- PRD – Baseline Concepts
- **PRD – Cargo**
- PRD – Cargo Ground Processing
- PRD – DRMs
- PRD – Other Requirements and Limitations
- Product Status
- Study Completion and Continuing Support

Cargo Description

- Systems
  - Spares/ORU (Orbital Replacement Units)
    - planned maintenance
    - replacement of failed items and systems
    - supplies, tools, and support equipment
  - Consumables and flight crew equipment, including life support consumables and equipment
  - Water, both potable and technical grades
  - Oxygen and nitrogen (gaseous)
- Utilization (Payloads)
  - Experiment hardware and supplies
  - Experiment products

External Cargo Complement

- **90 percent system ORUs**
  - Approximately 180 types of ORUs and ancillary equipment
  - 65 percent fit a volume of 36 in. X 47 in. X 25 in. (not including spacing requirements for robotic removal). Dimensions represent the footprint of a single FRAM site.
  - Average density approx. 18 lb/ft^3
- **10 percent utilization experiments**
  - Typically fit an envelope of 34 in. X 46 in. X 49 in. (not including spacing requirements for robotic removal). Dimensions represent the envelope for an EXPRESS pallet payload.
  - Approx. 500 lb (227 kg)
- **2 percent have requirements for keep-alive power (Power for internal systems and/or communications equipment)**
  - Not included as part of the DRM cargo support requirements
  - Out of scope for concept studies
- **Some external cargo may require thermal heaters to maintain the thermal qualification limits depending on the thermal environment and the flight attitude of the AAS vehicle**

Internal Cargo Complement

- Passive cargo complement (typical)
  - Volume spread
    - 15 percent half-size Cargo Transfer Bags (CTB)
    - 75 percent full-size CTB
    - 2 percent double-size CTB
    - 3 percent triple-size CTB
    - 3 percent M01 bags
    - 2 percent M02 bags
  - Mass
    - Avg. Density approx 37 lb/ CTBE (17 kg/CTBE)
    - 99 percent of individual items less than 200 lb (91 kg)
- Active cargo complement (typical)
  - 7 to 17 powered single locker Middeck (MDK) experiments
  - 0.1 kW each average power
  - 2 $ft.^3$ Volume
  - Avg. 60 lb (27 kgs)

Contents

- Schedule Review
- Action Items and Issues
- Definitions Update
- Process
- Traffic Modeling
- Cargo Matrix
- PRD – Baseline Concepts
- PRD – Cargo
- **PRD – Cargo Ground Processing**
- PRD – DRMs
- PRD – Other Requirements and Limitations
- Product Status
- Study Completion and Continuing Support

Cargo Ground Processing - General

- Majority of systems and utilization cargo transferred flight ready to AAS at KSC
  - Standardized ISS requirements consistent with existing processes
  - Ensures concept studies account for transportation and management
  - Minimizes variables in AAS concepts for processing different hardware types
- Some utilization cargo transferred to AAS at launch site
  - Maximizes potential for AAS to support ISS science

Cargo Ground Processing - KSC Transferred Items

- Flight ready when transferred at KSC
  - Internal in bags
  - External on FRAMs in ISS approved shipping containers
- AAS transports to launch site
- AAS stores, removes from shipping containers, integrates into cargo sub-carriers/carriers
- Environmental controls include acceleration, temperature, humidity, cleanliness, electrical bonding, and static charge
- AAS supplies all facilities, manpower, and equipment from transfer to delivery at ISS

Cargo Ground Processing - Launch Site Transferred

- Cargo owner provides transportation, unique equipment, and processing personnel
- AAS provides facility support similar to that in the KSC SSPF
- Cargo owner will process for launch then transfer flight ready to AAS
- AAS integrates into cargo sub-carrier/carrier
- Environmental controls include acceleration, temperature, humidity, cleanliness, electrical bonding, and static charge
- Support services include power, fluids, and purges

Cargo Ground Processing - Return Cargo

- AAS removes cargo from vehicle and deintegrates from carrier
- Majority of cargo will be returned unopened to KSC
- Time critical/sensitive utilization cargo will be returned to owner for processing and shipment at the AAS payload processing facility
- Environmental control and services will be similar to prelaunch
- AAS supplies all facilities, manpower, and equipment from installation into vehicle at ISS to transfer to owner/ISS Program

Cargo Ground Processing - Cargo Access

- Required for time critical or sensitive cargos
- Late installation
- Return to payload processing facility for owner processing in event of launch delay or scrub
- Early access to returned cargo
- Requirements in DRMs

Cargo Ground Processing - KSC Considerations

- Applicable to concepts using KSC/CCAFS as launch and/or landing site
- All cargo transferred at KSC
- SSPF available to process utilization payloads
- All other requirements apply

Contents

- Schedule Review
- Action Items and Issues
- Definitions Update
- Process
- Traffic Modeling
- Cargo Matrix
- PRD – Baseline Concepts
- PRD – Cargo
- PRD – Cargo Ground Processing
- **PRD - DRMs**
- PRD – Other Requirements and Limitations
- Product Status
- Study Completion and Continuing Support

DRM Categories

- Cargo Type – Type of cargo that will be manifested on the AAS
  - Systems cargo
  - Utilization (Payloads) cargo
  - Assembly cargo not included as part of AAS study
    - Typically large elements associated with a predefined assembly flight
- Cargo Hazards - This category defines the different types of potential hazards that may be encountered with the cargo complement defined for each DRM. These hazards should be taken into consideration when developing the AAS System
- Carrier Type – Define the type of vehicle/carrier required to deliver the cargo defined in the DRM
  - Pressurized cargo vehicle – only required to accommodate internal cargo that must be protected from the space environment
  - Unpressurized cargo vehicle – only required to accommodate external cargo exposed to the space environment
  - Mixed cargo vehicle – capability to transport internal and external cargo on the same vehicle

DRM Categories (cont.)

- Total Mass – Cargo mass delivered to the AAS service provider, including accommodations. Cargo mass defined by the associated Traffic Model (TM) to satisfy ISS requirements.
  - Internal cargo – Accommodations factor of 30% added to TM cargo mass
    - Documented in SSP 50261-01 Generic Groundrules, Requirements and Constraints
  - External cargo – Accommodations factor of 120% added to TM cargo mass
    - Factor developed based on analysis of projected average ORU FSE weight for ISS flights ULF2, UF3, UF4, UF5, 14A, and UF6
- Total Volume – Cargo volume delivered to the AAS service provider including accommodations. Cargo volume defined by Traffic Model mass and average densities.
  - Internal cargo
    - Accommodations factor of 30% added to TM cargo mass
      - Documented in SSP 50261-01 Generic Groundrules, Requirements and Constraints
    - Density of 20 lbs/ft^3 developed based on analysis of previous ISS logistics flights
  - External cargo
    - Density of 18 lbs/ft^3 developed based on analysis of ORUs in cargo matrix

DRM Categories (cont.)

- ISS Transfer Method – The method used to transfer the cargo. Internal cargo is transferred via Intravehicular Activity (IVA). External cargo will be transferred via EVR - Extravehicular Robotics
- ISS Attach Period - Defines the minimum and maximum duration the AAS vehicle can remain attached to the ISS
  - Minimum time defined as duration to transfer cargo
    - Approximately 23 minutes per CTBE
    - Approximately ½ day to transfer 1 FRAM equivalent
  - Maximum time defined by Traffic Model vehicle traffic and ISS micro-g requirement
- Cargo Support Requirements – The support required by the cargo during different phases of the mission to be supplied by the AAS service provider. Requirements are only for internal cargo
  - Power / Cooling – 0.1 kW per MDK average
  - Data – approximately 10 Kbps per MDK
  - Late / early access – Defined by current Shuttle standards for middeck and MPLM access

DRM Categories (concluded)

- **Cargo Qualification Limits – Defines the qualification limits of the cargo that the AAS will deliver**
  - Internal load factors / thermal limits – Developed based on current environments of Shuttle middeck and MPLM
  - External load factors / thermal limits – Developed based on groupings of similar ORUs
- **Response period – Based upon current launch processing for the Progress**
  - Available at transfer location - The time at which the AAS service provider can pick up the cargo from the transfer location to transport it to the launch site
  - Cargo manifest defined - The time from when the mission is identified and a cargo manifest is defined (type and number of bags) to when the AAS vehicle is attached to the ISS
- **Cargo Transfer / Return Location – The location where the AAS service provider receives / returns cargo**
- **Flights per Year – The projected average flight rate per year for a specific DRM that best accommodates the operational constraints of the ISS**

DRMs Created

DRM Description	DRM ID	Rational
Logistics skip cycle support Pressurized cargo vehicle	AAS 1	◆ **Created at request of MSFC for rapid response capability**
Maximum annual cargo Mixed cargo vehicle	AAS 2	◆ **Developed as the upper bound of cargo requirements for the AAS**
Minimum annual cargo Mixed cargo vehicle	AAS 3	◆ **Developed as the lower bound of cargo requirements for the AAS**
Maximum annual cargo Passive cargo only Mixed cargo vehicle		◆ **DRM created for an unpowered AAS** ◆ **Cargo manifesting conformed to vehicle type, so that only passive cargo would be manifested on the AAS** ◆ **DRM did not satisfy the ISS shortfall of powered MDK for utilization, therefore excluded from Performance Requirements Document**
Minimum annual cargo Passive cargo only Mixed cargo vehicle		◆ **Same as previous passive cargo case** ◆ **Did not meet ISS requirements, therefore excluded from Performance Requirements Document**
Nominal annual cargo Mixed cargo vehicle	AAS 4	◆ **Developed as the average cargo requirement for the AAS** ◆ **Accounted for vehicle failures and launch slips**
Nominal annual cargo Pressurized cargo vehicle	AAS 5	◆ **Potential for less expensive AAS concept to deliver internal cargo only** ◆ **Derivative of previous case** ◆ **Cargo manifesting conformed to vehicles available** ◆ External cargo launched on other ISS vehicles ◆ Resulting backlog of internal cargo launched on AAS
Nominal annual cargo Unpressurized cargo vehicle		◆ **Same rational as previous case** ◆ **DRM did not meet ISS requirements** ◆ Created large backlog of internal cargo for launch ◆ Created large backlog of external recoverable cargo for return

Shaded DRMs not included in AAS Performance Requirements Document

DRMs Created (concluded)

DRM Description	DRM ID	Rational
Nominal annual cargo Mixed fleet of pressurized vehicles and unpressurized vehicles	AAS 6	◆ **Potential for less expensive AAS concept to deliver only one type of cargo, internal or external** ◆ **Derivative of previous case** ◆ **Requires both types of vehicles, pressurized and unpressurized, to meet the ISS requirements**
Increased utilization cargo mixed cargo vehicle		◆ **DRM created to eliminate transportation constraints for utilization cargo** ◆ Increased upmass by 30% ◆ Increased number of powered MDK by 60% ◆ **Vehicle size bounded by minimum annual cargo case** ◆ Flight rate of 5 vehicles per year versus 2 ◆ **DRM also significantly increased the backlog of internal recoverable cargo**
Nominal descent nonrecoverable cargo Mixed cargo vehicle		◆ **DRM created to define requirement for AAS to remove nonrecoverable cargo from the ISS** ◆ **DRM eliminated and incorporated into other DRMs** ◆ Requirement created for same mass and volume for nonrecoverable descent cargo as ascent cargo
Nominal descent recoverable cargo Pressurized cargo vehicle	AAS 7	◆ **Optional DRM for AAS to develop a return capability** ◆ **Reduce potential backlog of descent recoverable cargo** ◆ Traffic model does not automatically optimize descent cargo loads ◆ Descent requirement based on ever changing ascent requirement

Shaded DRMs not included in AAS Performance Requirements Document

Design Reference Missions (DRMs)

DRM ID	AAS 1	AAS 2	AAS 3	AAS 4	AAS 5	AAS 6	AAS 7
Description	Logistics ship cycle support Pressurized cargo vehicle	Maximum annual cargo Mixed cargo vehicle	Minimum annual cargo Mixed cargo vehicle	Nominal annual cargo Mixed cargo vehicle	Nominal annual cargo Pressurized cargo vehicle	Nominal annual cargo Mixed fleet of pressurized vehicles and unpressurized vehicles	Nominal descent recoverable cargo Pressurized cargo vehicle
Cargo Type	Systems - passive cargo	Systems and Utilization	Systems and Utilization	Systems and Utilization	Systems and Utilization	Systems and Utilization	Systems and Utilization
Cargo Hazards	Fluids Chemicals	Fluids Stored Energy Biologicals Chemicals Combustibles Fragiles	Fluids Stored Energy Biologicals Chemicals Combustibles Fragiles	Fluids Stored Energy Biologicals Chemicals Combustibles Fragiles	Fluids Stored Energy Biologicals Chemicals Combustibles Fragiles	Fluids Stored Energy Biologicals Chemicals Combustibles Fragiles	Fluids Stored Energy Biologicals Chemicals Combustibles Fragiles
Carrier Type	Pressurized	Mixed	Mixed	Mixed	Pressurized	Pressurized or Unpressurized	Pressurized
Total Mass, kg (cargo and accommodations)	Internal - 1500	Internal - 3400 External - 1250	Internal -2500 External - 1470	Internal - 2350 External - 1230	Internal - 2330	Internal - 3850 External - 3050	Internal - 2600 annual avg
Total Volume (cargo and accommodations) Internal, CTBE / MDK External, ft^3 / approx. # of FRAM sites	Internal - 90 / 0	Internal - 205 / 7 External - 70 / 4	Internal - 170 / 17 External - 68 / 4	Internal - 140 / 7 External - 70 / 4	Internal - 140 / 7	Internal - 235 / 12 External - 170 / 8	Internal - 150 / 35 annual avg
ISS Transfer Method	Internal - N/A	Internal - N/A External - EVR	Internal - N/A External - EVR	Internal - N/A External - EVR	Internal - N/A	Internal - N/A External - EVR	Internal - N/A
ISS Attach period	Min ~ 6 days Max ~ 36 days	Min ~ 10 days Max ~ 36 days	Min ~ 9 days Max ~ 21 days	Min ~ 6 days Max ~ 36 days	Min ~ 6 days Max ~ 36 days	Min ~ 4 days unpress ~ 10 days press Max ~ 36 days	Attach period included as part of ascent DRM
Cargo Support Requirements							
Ground	N/A	Power - 0.7 kW avg Cooling - 0.7 kW avg Data - 100 Kbps	Power - 1.7 kW avg Cooling - 1.7 kW avg Data - 168 Kbps	Power - 0.7 kW avg Cooling - 0.7 kW avg Data - 100 Kbps	Power - 0.7 kW avg Cooling - 0.7 kW avg Data - 100 Kbps	Power - 1.2 kW avg Cooling - 1.2 kW avg Data - 168 Kbps	N/A
Launch Pad	Late Access 26% CTBE L-88 hrs	Power - 0.7 kW avg Cooling - 0.7 kW avg Data - 100 Kbps Late Access MDK until L-19.5 hrs 26% CTBE until L-88 hrs	Power - 1.7 kW avg Cooling - 1.7 kW avg Data - 168 Kbps Late Access MDK until L-19.5 hrs 26% CTBE until L-88 hrs	Power - 0.7 kW avg Cooling - 0.7 kW avg Data - 100 Kbps Late Access MDK until L-19.5 hrs 26% CTBE until L-88 hrs	Power - 0.7 kW avg Cooling - 0.7 kW avg Data - 100 Kbps Late Access MDK until L-19.5 hrs 26% CTBE until L-88 hrs	Power - 1.2 kW avg Cooling - 1.2 kW avg Data - 168 Kbps Late Access MDK until L-19.5 hrs 26% CTBE until L-88 hrs	N/A
Ascent/Pre-transfer	N/A	Power - 0.7 kW avg Cooling - 0.7 kW avg Data - 100Kbps	Power - 1.7 kW avg Cooling - 1.7 kW avg Data - 168 Kbps	Power - 0.7 kW avg Cooling - 0.7 kW avg Data - 100 Kbps	Power - 0.7 kW avg Cooling - 0.7 kW avg Data - 100 Kbps	Power - 1.2 kW avg Cooling - 1.2 kW avg Data - 168 Kbps	N/A
Attached to ISS	N/A	Power - 0.7 kW avg Cooling - 0.7 kW avg Data - 100Kbps	Power - 1.7 kW avg Cooling - 1.7 kW avg Data - 168 Kbps	Power - 0.7 kW avg Cooling - 0.7 kW avg Data - 100 Kbps	Power - 0.7 kW avg Cooling - 0.7 kW avg Data - 100 Kbps	Power - 1.2 kW avg Cooling - 1.2 kW avg Data - 168 Kbps	N/A
Post Transfer (down cargo)	N/A	N/A	N/A	N/A	N/A	N/A	Power - 0.1 kW per MDK Cooling - 0.1 kW per MDK Data - 10 Kbps per MDK
Post landing (down cargo)	N/A	N/A	N/A	N/A	N/A	N/A	Power - 0.1 kW per MDK Cooling - 0.1 kW per MDK Data - 10 Kbps per MDK Early access MDK at L+4 hrs 26% CTBE at L+86 hrs
Cargo Qualification Limits	**Internal** Load Factors N(x) +/- 9.0 g N(y) +/- 11.6 g N(z) +/- 9.9 g Thermal 18.3 to 26.7 C	**Internal** Load Factors N(x) +/- 9.0 g N(y) +/- 11.6 g N(z) +/- 9.9 g Thermal 20 to 26.7 C **External** Load Factors N(x) +/- 10.0 g N(y) +/- 2.5 g N(z) +/- 2.5 g Thermal -43 to 71 C	**Internal** Load Factors N(x) +/- 9.0 g N(y) +/- 11.6 g N(z) +/- 9.9 g Thermal 20 to 26.7 C **External** Load Factors N(x) +/- 10.0 g N(y) +/- 2.5 g N(z) +/- 2.5 g Thermal -43 to 71 C	**Internal** Load Factors N(x) +/- 9.0 g N(y) +/- 11.6 g N(z) +/- 9.9 g Thermal 20 to 26.7 C **External** Load Factors N(x) +/- 10.0 g N(y) +/- 2.5 g N(z) +/- 2.5 g Thermal -43 to 71 C	**Internal** Load Factors N(x) +/- 9.0 g N(y) +/- 11.6 g N(z) +/- 9.9 g Thermal 20 to 26.7 C	**Internal** Load Factors N(x) +/- 9.0 g N(y) +/- 11.6 g N(z) +/- 9.9 g Thermal 20 to 26.7 C **External** Load Factors N(x) +/- 10.0 g N(y) +/- 2.5 g N(z) +/- 2.5 g Thermal -43 to 71 C	**Internal** Load Factors N(x) +/- 5.4 g N(y) +/- 7.7 g N(z) +/- 8.0 g Thermal 20 to 26.7 C
Response Period							
Avail. at transfer location	L - 14 days	L - 1 month	L - 1 month	L - 1 month	L - 1 month	L - 1 month	N/A
Cargo manifest defined	L - 40 days	L - 4 months	L - 4 months	L - 4 months	L - 4 months	L - 4 months	N/A
Cargo Transfer Location	KSC	KSC	KSC	KSC	KSC	KSC	N/A
Cargo Return Location	N/A	N/A	N/A	N/A	N/A	N/A	KSC
Flights per Year	N/A	6	2	8	6	3 Pressurized 3 Unpressurized	Flight rate determined by ascent DRM

- **These represent the subset of DRMs included in the AAS Performance Requirements Document**
- **The complete set of DRMs will be provided within the Final Report**

DRM AAS 1, Logistics Skip Cycle Support

DRM ID	AAS 1
Description	Logistics skip cycle support Pressurized cargo vehicle
Cargo Type	Systems - passive cargo
Cargo Hazards	Fluids Chemicals
Carrier Type	Pressurized
Total Mass, kg (cargo and accommodations)	Internal - 1500
Total Volume (cargo and accommodations) Internal CTBE / MDK External: ft^3 / approx # of FRAM sites	Internal - 90 / 0
ISS Transfer Method	Internal - N/A
ISS Attach period	Min ~ 6 days Max ~ 35 days
Cargo Support Requirements	
Ground	N/A
Launch Pad	Late Access 25% CTBE L-88 hrs
Ascent/Pre-transfer	N/A
Attached to ISS	N/A
Post Transfer (down cargo)	N/A
Post landing (down cargo)	N/A
Cargo Qualification Limits	Internal Load Factors N(x) +/- 9.0 g N(y) +/- 11.6 g N(z) +/- 9.9 g Thermal 18.3 to 26.7 C
Response Period	
Avail. at transfer location	L - 14 days
Cargo manifest defined	L - 40 days
Cargo Transfer Location	KSC
Cargo Return Location	N/A
Flights per Year	N/A

- This DRM supports the logistic needs of the ISS in the event a planned vehicle cannot complete its mission. Therefore, this DRM does not have an associated planned flight rate. The vehicle was sized to provide nominal supplies for the crew. This includes food, clothes, towels, waste containers, etc. All of the cargo is internal and passive; therefore, it has no support requirements other than late access. This mission requires a maximum response period of 40 days from request of launch service to vehicle attached to ISS.
- Total Cargo Mass - 1500 kg internal
- Total Cargo Volume – 90 CTBE internal
- Cargo Support Requirements
  - Power/Cooling – N/A
  - Data – N/A
- Flights per year – N/A

DRM AAS 2, Max. Annual Cargo, Mixed Vehicle

DRM ID	AAS 2
Description	Maximum annual cargo Mixed cargo vehicle
Cargo Type	Systems and Utilization
Cargo Hazards	Fluids Stored Energy Biologicals Chemicals Combustibles Fragiles
Carrier Type	Mixed
Total Mass, kg (cargo and accommodations)	Internal - 3460 External - 1260
Total Volume (cargo and accommodations) Internal: CTBE / MDK External: ft^3/ approx. # of FRAM sites	Internal - 205 ft^3 External - 70 ft^3
ES Transfer Method	Internal - IVA External - EVR
ES Attach period	Min - 10 days Max. - 95 days
Cargo Support Requirements	
Ground	Power - 0.7 kW avg. Cooling - 0.7 kW avg. Data - 100 Kbps
Launch Pad	Power - 0.7 kW avg. Cooling - 0.7 kW avg. Data - 100 Kbps Late Access MDK until L-19.5 hrs 25% CTBE until L-33 hrs
Ascent/Pre-transfer	Power - 0.7 kW avg. Cooling - 0.7 kW avg. Data - 100 Kbps
Attached to ES	Power - 0.7 kW avg. Cooling - 0.7 kW avg. Data - 100 Kbps
Post Transfer (down cargo)	N/A
Post landing (down cargo)	N/A
Cargo Qualification Limits	Internal Load Factors N(x) 1 - 90 g N(y) 1 - 118 g N(z) 1 - 99 g Thermal 20 to 26.7 C External Load Factors N(x) 1 - 100 g N(y) 1 - 25 g N(z) 1 - 25 g Thermal -49 to 71 C
Response Period	
Avail. at transfer location	L - 1 month
Cargo manifest defined	L - 4 months
Cargo Transfer Location	KSC
Cargo Return Location	N/A
Flights per Year	5

- This DRM defines the projected maximum annual cargo for the AAS service provider. The flight rate of 5 flights per year was the maximum projected available that still met ISS requirements. The cargo complement will include both external and internal cargo. The internal cargo also includes an average of 7 Middeck (MDK) sized utilization experiments. These cargo items will require resources (power, cooling, data), as well as late access installation.
- Total Cargo Mass
  - 3460 kg internal
  - 1260 kg external
- Total Cargo Volume
  - 205 CTBE internal
  - 7 MDK internal
  - 70 ft^3 external ⇨ 4 FRAM sites
- Cargo Support Requirements
  - Power/Cooling – 0.7 kW
  - Data – 100 Kbps
- Flights per year - 5

DRM AAS 3, Min. Annual Cargo, Mixed Vehicle

DRM ID	AAS 3
Description	Minimum annual cargo Mixed cargo vehicle
Cargo Type	Systems and Utilization
Cargo Hazards	Fluids Stored Energy Biologicals Chemicals Combustibles Fragiles
Carrier Type	Mixed
Total Mass, kg (cargo and accommodations)	Internal - 2830 External - 1470
Total Volume (cargo and accommodations) Internal: CTBE / MDK External: 1 ft³ / approx. # of FRAM sites	Internal - 170 / 17 External - 80 / 4
ES Transfer Method	Internal - IVA External - EVR
ES Attach period	Min - 9 days Max. - 21 days
Cargo Support Requirements	
Ground	Power - 1.7 kW avg. Cooling - 1.7 kW avg. Data - 150 Kbps
Launch Pad	Power - 1.7 kW avg. Cooling - 1.7 kW avg. Data - 150 Kbps Late Access MDK until L-19.5 hrs 25% CTBE until L-33 hrs
Ascent/Pre-transfer	Power - 1.7 kW avg. Cooling - 1.7 kW avg. Data - 150 Kbps
Attached to ES	Power - 1.7 kW avg. Cooling - 1.7 kW avg. Data - 150 Kbps
Post Transfer (down cargo)	N/A
Post Landing (down cargo)	N/A
Cargo Qualification Limits	Internal Load Factors N(x) 1 - 90 g N(y) 1 - 118 g N(z) 1 - 99 g Thermal 20 to 28.7 C External Load Factors N(x) 1 - 100 g N(y) 1 - 25 g N(z) 1 - 25 g Thermal -49 to 71 C
Response Period	
Avail. at transfer location	L - 1 month
Cargo manifest defined	L - 4 months
Cargo Transfer Location	KSC
Cargo Return Location	N/A
Flights per Year	2

- This DRM is similar to the AAS 2, but it defines the projected minimum annual cargo for the AAS service provider. Only two flight opportunities are projected to be available and still meet ISS requirements. The cargo complement for the DRM includes both external and internal cargo as well as an average of 17 MDK utilization experiments. These cargo items will require resources (power, cooling, data) as well as late access installation.
- Total Cargo Mass
  - 2830 kg internal
  - 1470 kg external
- Total Cargo Volume
  - 170 CTBE internal
  - 17 MDK internal
  - 80 ft^3 external ⇨ 4 FRAM sites
- Cargo Support Requirements
  - Power/Cooling – 1.7 kW
  - Data – 150 Kbps
- Flights per year - 2

DRM AAS 4, Nom. Annual Cargo, Mixed Vehicle

DRM ID	AAS 4
Description	Nominal annual cargo Mixed cargo vehicle
Cargo Type	Systems and Utilization
Cargo Hazards	Fluids Stored Energy Biologicals Chemicals Combustibles Fragiles
Carrier Type	Mixed
Total Mass ,kg (cargo and accommodations)	Internal - 2300 External - 1230
Total Volume (cargo and accommodations) Internal: CTBE / MDK External: ft^3/ approx. # of FRAM sites	Internal - 140 / 7 External - 70 / 4
ISS Transfer Method	Internal - IVA External - EVA
ISS Attach period	Min - 3 days Max. - 35 days
Cargo Support Requirements	
Ground	Power - 0.7 kW avg. Cooling - 0.7 kW avg. Data - 100 Kbps
Launch Pad	Power - 0.7 kW avg. Cooling - 0.7 kW avg. Data - 100 Kbps Late Access MDK until L-12.5 hrs 25% CTBE until L-33 hrs
Ascent/Pre-transfer	Power - 0.7 kW avg. Cooling - 0.7 kW avg. Data - 100 Kbps
Attached to ISS	Power - 0.7 kW avg. Cooling - 0.7 kW avg. Data - 100 Kbps
Post Transfer (down cargo)	N/A
Post landing (down cargo)	N/A
Cargo Qualification Limits	Internal Load Factors N(x) 1 - 9.0 g N(y) 1 - 11.8 g N(z) 1 - 9.9 g Thermal 20 to 28.1 C External Load Factors N(x) 1 - 10.0 g N(y) 1 - 25 g N(z) 1 - 25 g Thermal -43 to 71 C
Response Period	
Australian transfer location	L - 1 month
Cargo manifest desired	L - 4 months
Cargo Transfer Location	KSC
Cargo Return Location	N/A
Flights per Year	5

- The nominal case DRM assumes the baseline flight rate of all vehicles but also assumes a projected failure rate and eventual launch slips to the schedule. These events will create a backlog of cargo for delivery to the ISS. Therefore, additional capability supplied by the AAS service provider will be required and planned into the launch schedule to account for this backlog. A total of 5 flight opportunities per year are projected for this case. The cargo complement for each vehicle includes both external and internal cargo. The internal cargo also includes an average of 7 MDK utilization experiments with associated cargo support requirements.
- Total Cargo Mass
  - 2300 kg internal
  - 1230 kg external
- Total Cargo Volume
  - 140 CTBE internal
  - 7 MDK internal
  - 70 ft^3 external ⇨ 4 FRAM sites
- Cargo Support Requirements
  - Power/Cooling – 0.7 kW
  - Data – 100 Kbps
- Flights per year - 5

DRM AAS 5, Nom. Annual Cargo, Press. Vehicle

DRM ID	AAS 5
Description	Nominal annual cargo Pressurized cargo vehicle
Cargo Type	Systems and Utilization
Cargo Hazards	Fluids Stored Energy Biologicals Chemicals Combustibles Fragiles
Carrier Type	Pressurized
Total Mass, kg (cargo and accommodations)	Internal - 2330
Total Volume (cargo and accommodations) Internal: CTBE / MDK External: ft^3 / approx. # of FRAM sites	Internal - 140 / 7
ISS Transfer Method	Internal - N/A
ISS Attach period	Min - 5 days Max. - 35 days
Cargo Support Requirements	
Ground	Power - 0.7 kW avg. Cooling - 0.7 kW avg. Data - 100 Kbps
Launch Pad	Power - 0.7 kW avg. Cooling - 0.7 kW avg. Data - 100 Kbps Late Access MDK until L-12.5 hrs 25% CTBE until L-48 hrs
Ascent/Pre-transfer	Power - 0.7 kW avg. Cooling - 0.7 kW avg. Data - 100 Kbps
Attached to ISS	Power - 0.7 kW avg. Cooling - 0.7 kW avg. Data - 100 Kbps
Post Transfer (down cargo)	N/A
Post landing (down cargo)	N/A
Cargo Qualification Limits	Internal Load Factors N(x) 11-9.0 g N(y) 11-11.8 g N(z) 11-9.9 g Thermal 20 to 28.7 C
Response Period	
Avail at transfer location	L - 1 month
Cargo manifest defined	L - 4 months
Cargo Transfer Location	KSC
Cargo Return Location	N/A
Flights per Year	5

- This DRM is a derivative of DRM AAS 4. It requires the AAS service provider vehicle only has capability to launch internal cargo. Therefore, all external cargo will be launched on other ISS logistic vehicles, and the AAS service provider will deliver the resulting backlog of internal cargo. The other DRM requirements are similar to those for the internal cargo of DRM AAS 4.
- Total Cargo Mass - 2330 kg internal
- Total Cargo Volume
  - 140 CTBE internal
  - 7 MDK internal
- Cargo Support Requirements
  - Power/Cooling – 0.7 kW
  - Data – 100 Kbps
- Flights per year - 5

DRM AAS 6, Nom. Annual Cargo, Mixed Fleet

DRM ID	AAS 6
Description	Nominal annual cargo Mixed fleet of pressurized vehicles and unpressurized vehicles
Cargo Type	Scientific and Utilitarian
Cargo Hazards	Pyro Stored Energy Biological Chemical Combustible Fragile
Carrier Type	Pressurized or Unpressurized
Total Mass, kg (cargo and accommodations)	Internal - 3850 External - 3090
Total Volume (cargo and accommodations) Internal - CTBE / MDK External - 9 Flight Approx. Pot FRAM Mission	Internal - 230 / 12 External - 170 / 9
B-S Transfer Method	Internal - N/A External - EVA
B-S Attach period	Air - [illegible] days unpressurized - [illegible] days pressurized Air > 15 days
Cargo Support Requirements	
Ground	Power - 1.2 kW avg. Cooling - 1.2 kW avg. Data - 150 kbps
Launch Pad	Power - 1.2 kW avg. Cooling - 1.2 kW avg. Data - 150 kbps Live Access MDK will L-[illegible] hrs 2ro CTBE will L-[illegible] hrs
Ascent Pre-transfer	Power - 1.2 kW avg. Cooling - 1.2 kW avg. Data - 150 kbps
Attached to ISS	Power - 1.2 kW avg. Cooling - 1.2 kW avg. Data - 150 kbps
Post Transfer (down cargo)	N/A
Post landing (down cargo)	N/A
Cargo Qualification Limits	Internal Load Factors Axial [illegible] g Axial [illegible] g Axial [illegible] g Thermal [illegible] to [illegible] °C External Load Factors Axial [illegible] g Axial [illegible] g Axial [illegible] g Thermal [illegible] to [illegible] °C
Response Period	
Avail. at transfer location	[illegible] month
Cargo manifest defined	[illegible] months
Cargo Transfer Location	KSC
Cargo Return Location	N/A
Flights per Year	3 Pressurized 2 Unpressurized

- This DRM is also based on the nominal annual cargo DRM, AAS 4. However, this DRM assumes two distinct vehicles, one vehicle delivering internal cargo only and the other vehicle delivering external cargo only. The 5 flight opportunities available were split proportionately by the amount of cargo required for delivery. Therefore, 3 flight opportunities were available for a pressurized vehicle and 2 flight opportunities for an unpressurized vehicle. Because of the reduced number of flight opportunities for each vehicle, the cargo mass, volume, and associated support requirements increased for each vehicle over the nominal case, DRM AAS 4.

Pressurized Vehicle

- Total Cargo Mass
  - 3850 kg internal
- Total Cargo Volume
  - 230 CTBE internal
  - 12 MDK internal
- Cargo Support Requirements
  - Power/Cooling – 1.2 kW
  - Data – 150 Kbps
- Flights per year
  - 3 Pressurized vehicles

Unpressurized Vehicle

- Total Cargo Mass
  - 3090 kg external
- Total Cargo Volume
  - 170 ft^3 external ⇨ 9 FRAM sites
- Cargo Support Requirements
  - Power/Cooling – N/A
  - Data – N/A
- Flights per year
  - 2 Unpressurized vehicles

DRM AAS 7, Nom. Descent Recoverable Cargo

DRM ID	AAS 7
Description	Nominal descent recoverable cargo Pressurized cargo vehicle
Cargo Type	Systems and Utilization
Cargo Hazards	Fluids Stored Energy Biologicals Chemicals Combustibles Fragiles
Carrier Type	Pressurized
Total Mass, kg (cargo and accommodations)	Internal - 2600 annual avg
Total Volume (cargo and accommodations) Internal CTBE / MDK External: ft^3 / approx. # of FRAM sites	Internal - 150 / 35 annual avg
ISS Transfer Method	Internal - N/A
ISS Attach period	Attach period included as part of ascent DRM
Cargo Support Requirements	
Ground	N/A
Launch Pad	N/A
Ascent/Pre-transfer	N/A
Attached to ISS	N/A
Post Transfer (down cargo)	Power - 0.1 kW per MDK Cooling - 0.1 kW per MDK Data - 10 Kbps per MDK
Post landing (down cargo)	Power - 0.1 kW per MDK Cooling - 0.1 kW per MDK Data - 10 Kbps per MDK Early access MDK at L+4 hrs 25% CTBE at L+96hrs
Cargo Qualification Limits	Internal Load Factors N(X) +/- 5.4 g N(Y) +/- 7.7 g N(Z) +/- 8.8 g Thermal 20 to 26.7 C
Response Period	
Avail at transfer location	N/A
Cargo manifest defined	N/A
Cargo Transfer Location	N/A
Cargo Return Location	KSC
Flights per Year	Flight rate determined by ascent DRM

- This DRM is optional and can be used in conjunction with one of the other DRMs. It satisfies the projected average annual backlog of descent, recoverable, internal cargo. External, recoverable cargo capability is not required. Estimates for mass and volume are listed as the annual averages because the flight rate for this DRM is defined by the ascent portion of AAS 1 – AAS 6 DRMs. The flight rate will also determine the amount of cargo support resources necessary to meet the annual average MDK requirement for utilization. This is not a standalone DRM. It must be used in conjunction with a mission(s) supporting cargo delivery. The AAS vehicle supporting this DRM will not be required to return an equivalent amount of non-recoverable, destructive descent cargo, as stated for the other DRMs. All cargo, except early access, should be returned to the point of transfer, KSC, within 1 month of landing.
- Total Cargo Mass - 2600 kg internal annual average
- Total Cargo Volume
  - 150 CTBE internal annual average
  - 35 MDK internal annual average
- Cargo Support Requirements
  - Power/Cooling – 0.1 kW per MDK
  - Data – 10 Kbps per MDK
- Flights per year – Determined by ascent DRM

Contents

- Schedule Review
- Action Items and Issues
- Definitions Update
- Process
- Traffic Modeling
- Cargo Matrix
- PRD – Baseline Concepts
- PRD – Cargo
- PRD – Cargo Ground Processing
- PRD - DRMs
- **PRD – Other Requirements and Limitations**
- Product Status
- Study Completion and Continuing Support

Other Requirements and Limitations

- Nominal attach points for an AAS vehicle on the United States On-orbit Segment (USOS)
  - Berthing - common berthing mechanism (CBM)
    - Node 2 nadir
    - Node 1 port
    - Grappled by the space station remote manipulator system (SSRMS)
    - AAS equipped with a SSRMS compatible grapple fixture to permit robotics operation
    - Equipped with the passive half of the CBM
  - Docking - androgynous peripheral attachment system (APAS)
    - PMA 2 on node 2 forward
    - PMA 3 on node 3 nadir
    - AAS vehicle will always be the active element and the ISS passive
    - AAS vehicle shall provide the necessary guidance, navigation, and trajectory control system for close proximity operations
    - Incorporate the active part of an androgynous peripheral attachment system (APAS).

Other Requirements and Limitations (cont)

- Potential attach points
  - AAS elements delivering only external cargo (in addition to those listed above)
    - Power data grapple fixture
    - Payload attach site
    - Unpressurized logistics carrier attach site
    - Element trunnion pin
  - The ISS program has not performed analysis
    - Acceptable vehicle envelopes
    - Approach corridors
    - Berthing clearances
    - Availability
    - Etc.

Other Requirements and Limitations (cont.)

- Internal cargo restraints
  - Passive cargo
    - Packed in soft-good bags
    - AAS service provider will design system to restrain these bags within the AAS vehicle.
    - Limited unique cargo items that do not fit into standard accommodations are out of scope of the concept studies
  - Active cargo
    - Active cargo in space shuttle middeck lockers
    - Limited unique cargo items that do not fit into standard accommodations are out of scope of the concept studies
    - The AAS service provider will provide all equipment for support and handling.
- External Cargo Restraints
  - External cargo will be attached to an adapter plate and the active half of a FRAM
  - AAS will provide the passive FRAM hardware, or equivalent mechanism to restrain the external cargo, on the AAS vehicle
    - Hardware will remain on the AAS vehicle once the cargo item is removed
  - Limited unique cargo items that do not fit into standard accommodations are out of scope of the concept studies

Other Requirements and Limitations (concluded)

- Internal cargo access
  - AAS orbital transfer element internal volume shall be compatible with the ISS internal environments
  - Hardware that will have a crew interface shall be designed in accordance with International Space Station flight crew integration standard.
- External cargo access
  - External cargo shall be EVR accessible and removable during the attached phase
  - Access envelopes for FRAM-mounted hardware are required
- AAS shall comply with Interface Definition Document for International Space Station Visiting Vehicles
- The space station coordinate system should be used when referencing the ISS
- The AAS orbital transfer element will be compatible with contingency EVA operations
- The AAS shall comply with all ISS safety requirements

Contents

- Schedule Review
- Action Items and Issues
- Definitions Update
- Process
- Traffic Modeling
- Cargo Matrix
- PRD – Baseline Concepts
- PRD – Cargo
- PRD – Cargo Ground Processing
- PRD - DRMs
- PRD – Other Requirements and Limitations
- **Product Status**
- Study Completion and Continuing Support

AAS Final Report Status

- Document is in work
- Allowance is being made to make document updates as required based on results of this Final Review
- Delivery date is Friday, February 15, 2002

Reference Library Status

- Reference Library complete except for additions required by changes to the Performance Requirements Document resulting from this review
- Both hardcopy and electronic copy are being provided
- References are included in the Library because they are:
  - Identified and referenced in the AAS Performance Requirements Document (PRD)
  - Listed as references in the SSP 50235 Interface Definition Document for International Space Station Visiting Vehicles
  - Identified and referenced in the detailed Traffic Model Appendix of the AAS Final Report
- Documents represented include:
  - SSP Documentation
  - NSTS Documentation
  - Design Standards
  - other
- A listing is provided in the back-up charts for this presentation

Contents

- Schedule Review
- Action Items and Issues
- Definitions Update
- Process
- Traffic Modeling
- Cargo Matrix
- PRD – Baseline Concepts
- PRD – Cargo
- PRD – Cargo Ground Processing
- PRD – Other Requirements and Limitations
- Product Status
- **Study Completion and Continuing Support**

Study Completion Activities

- Close Final Review Actions — Feb 15, 2002
- AAS Performance Requirements Document — Feb 15, 2002
- AAS Final Report — Feb 15, 2002
  - Cargo Matrix
  - Reference Library

Contract Extension Status

- USA will continue low level of support until task revision is processed
- Task revision status
  - SOW developed between MSFC AAS and USA
  - Decision Package (DP) and baseline pricing developed and negotiated between MSFC AAS and USA
  - SOW and DP reviewed with USA's JSC ISSPO TMR.
    - Format and wording Mods agreed to by all parties
    - No significant change to contents
- Plan
  - Confirmation of budget transfer (NASA)
  - Final Pricing (USA)
  - Decision Package signatures (USA/NASA)
  - Issue Contract Change (NASA)
  - ID and transfer personnel into program (USA)
  - Develop Phase II Schedules/Metrics (USA/NASA)

BACKUP

Detailed Schedule

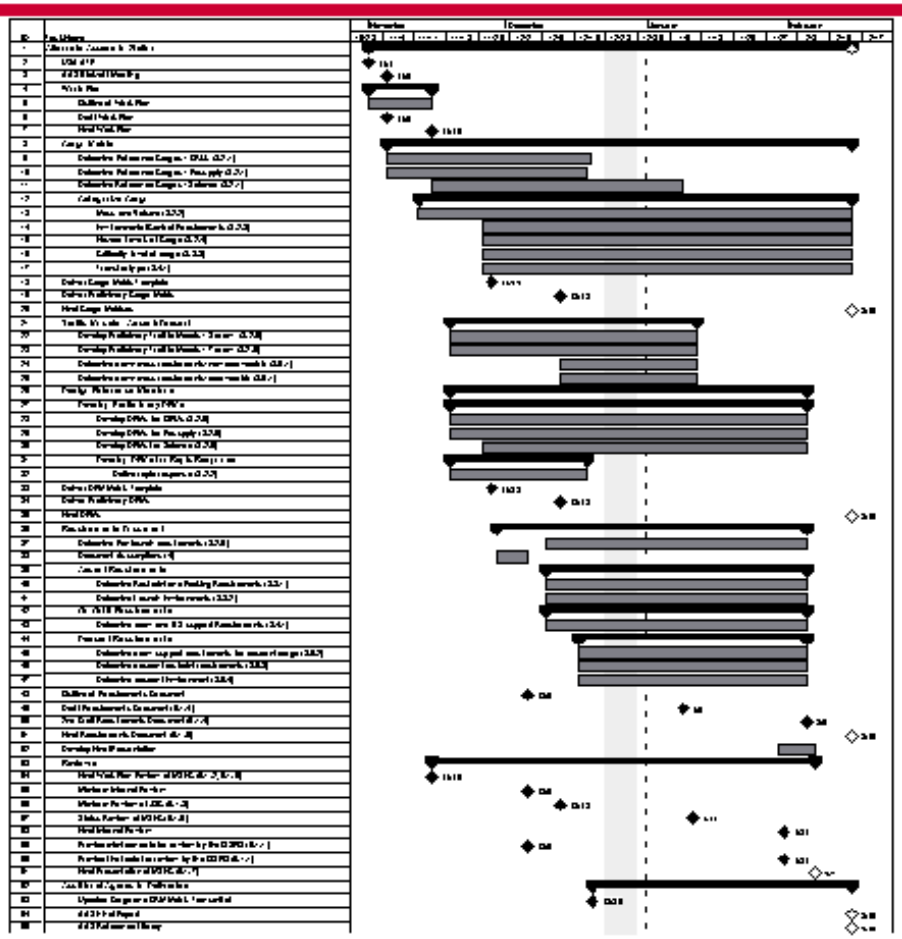

Acronyms

AAS	Alternate Accessible Station
APAS	Androgynous Peripheral Attachment System
APDS	Androgynous Peripheral Docking System
ATV	Ariane Transport Vehicle
C	Centigrade
C&DH	Command and Data Handling
CAM	Centrifuge Accommodations Module
CBM	Common Berthing Mechanism
CCAFS	Cape Canaveral Air Force Station
cm	centimeter(s)
COF	Columbus Operating Facility
CRV	Crew Return Vehicle
CTB	Cargo Transfer Bag
CTBE	Cargo Transfer Bag Equivalent
DAC	Design Analysis Cycle
DRM	Design Reference Mission
EFGF	Electrical Flight Grapple Fixture
EUTAS	Enhanced Universal Trunnion Attachment System
EVA	Extravehicular Activity
EVR	Extravehicular Robotics
F	Fahrenheit
FRGF	Flight Releasable Grapple Fixture
FRAM	Flight Releasable Attachment Mechanism
FSE	Flight Support Equipment
G	Gravity
GGR&C	Generic Groundrules, Requirements and Constraints
GN&C	Guidance, Navigation, and Control
GSE	Ground Support Equipment
HTV	H2A Transport Vehicle
ICD	Interface Control Document
IDD	Interface Definition Document
IP	International Partners
ISS	International Space Station
ITA	Integrated Truss Assembly
ITS	Integrated Truss Segment
IVA	Intravehicular Activity
JEM	Japanese Experiment Module
JSC	Johnson Space Center
Kbps	Kilobits per second
Km	Kilometer
MV	Megavolts
KSC	Kennedy Space Center
lb	Pounds (avoirdupois)
lbm	Pound mass
LEE	Latching End Effector
LF	Load Fast
MDK	Middeck
MLE	Middeck Locker Equivalent
MOD	Micrometeoroid/Orbital Debris
MPLM	Multi-Purpose Logistics Module
MSFC	Marshall Space Flight Center
MSS	Mobile Servicing System
NASA	National Aeronautics Space Administration
NSTS	National Space Transportation System
ORU	Orbital Replacement Unit
ORFM	ORU Fast Change-out Mechanism
PAS	Payload Attach Site
PDGF	Power Data Grapple Fixture
PIA	Payload Integration Agreements
PMA	Pressurized Mating Adapter
RMS	Remote Manipulator System
RSA	Russian Space Agency
SB	Station Body
SIDD	Standard Interface Definition Document
SPP	Science Power Platform
SSMB	Space Station Manned Base
SSP	Space Station Program (refers only to SSP document numbers)
SSPF	Space Shuttle Payload Processing Facility
SSRMS	Space Station Remote Manipulator System
TBD	To Be Determined
TM	Traffic Model
UCC	Unpressurized Cargo Carrier
UCCAS	Unpressurized Cargo Carrier Attach Site
ULCAS	Unpressurized Logistics Carrier Attach System
UMA	Umbilical Mechanism Assembly
USA	United Space Alliance
USOS	United States On-orbit Segment
UTAS	Universal Trunnion Attachment System
Vdc	Volts dc (direct current)
VV	Visiting Vehicle

Reference Library List

D683-96059-01	Small Adapter Rate Interface Definition Document
D684-10822-01	Standard Interface Definition Document (SIDD) for the Flight Releasable Attachment Mechanism (FRAM)
D684-96059-01	Standard Interface Definition Document (SIDD) for the Flight Releasable Attachment Mechanism (FRAM)
JSC 26938	Procurement Specification for the Androgynous Peripheral Docking System for International Space Station Mission
JSC 28169	Interface Control Document for the International Space Station Resupply Stowage Platform 1 Stowage System to Cargo Providers
JSC 39233	Interface Definition Document for the International Space Station Cargo Transfer Bag (CTB)
NSTS 07700	System Description and Data Design
NSTS 14046E	Payload Verification Requirements
NSTS 21000-IDD ISS	International Space Station Interface Definition Document
NSTS 21000-IDD MDK	Shuttle Interface Definition Document for Middeck Payloads
SSP 30219	Space Station Reference Coordinate Systems
SSP 30233F	Space Station Requirements for Materials and Processes
SSP 30256 001G	Space Station Program Extravehicular Activity (EVA) Standard Interface Control Document
SSP 30425B	Space Station Natural Environment Definition for Design
SSP 41000	ISS Systems Specification
SSP 41004	Common Berthing Mechanism to Pressurized Elements Interface Control Document
SSP 41142	Space Station Program Node Elements to Cupola Element Interface Control Document, Part 1
SSP 42003	Space Station Manned Base (SSMB) to Mobile Servicing System (MSS) Interface control Document
SSP 42004	Mobile Servicing System to User (Generic) Interface Control Document
SSP 42007	United States On-orbit Segment to Italian Multi-Pressurized Logistics Module Interface Control Document
SSP 50005	International Space Station Flight Crew Integration Standard
SSP 50021	Space Station Safety Requirements Document
SSP 50235	Interface Definition Document for International Space Station Visiting Vehicles
SSP 50261-01	Generic Groundrules, Requirements and Constraints
SSP 50467	ISS Stowage Accommodation Handbook – Pressurized Volumes
SSP 50491	Flight Releasable Attachment Mechanism (FRAM) System Prime Item Development Specification
SSP 50492	General ISS On-orbit Requirements for Non-Pressurized Environment FSE
SSP 50504	International Space Station Configuration Document
SSP 50520	International Space Station Logistics and Maintenance Operations Support Document
SSP 52000-06	International Space Station Program Implemental Plan
SSP 52051	User Electric Power Specifications and Standards
SSP 57059	Standard Payload Integration Agreement for Pressurized Payloads
SSP 57061	Standard Payload Integration Agreement for Pressurized Payloads
TDS D8.1.1-04	Final, ISS Integrated Traffic Model Report (DAC 8)

Definitions

AAS Orbital Transfer Element – The specific flight element that carries the cargo and is attached to the ISS.

AAS System – The integrated end-to-end system supporting Alternate Access to Station. This includes launch vehicle, orbital vehicle, launch facilities, payload processing facilities, ground control, etc.

AAS Vehicle – Any or all of the flight elements included in the AAS system. This includes launch vehicle, orbital transfer element, reentry vehicle, etc.

Accommodations – The additional mass and volume added to a cargo item once it has been packed for launch (e.g., cushioning foam).

Assessment – The process that includes collection of data and the processing of that data to allow declaration of pass/fail status of a particular function for that level of equipment indenture (e. g., end item).

Berthing – Method of mating an incoming vehicle to the ISS using the Space Station Remote Manipulator System. The incoming vehicle does not use its own power to assist in this activity.

Cargo – Equipment or supplies that are delivered to the ISS. Cargo falls into two category types: Systems or Utilization.

Cargo Transfer Bag Equivalent (CTBE) – A unit of measure used to characterize the gross amount of cargo. One CBTE equals 1.86 ft^3 and approximately 37 lb.

Docking – The mating of an incoming vehicle to the ISS, powered by the incoming vehicles, with no assistance from the ISS.

Definitions

External Cargo – Cargo whose final installed location will be on the external surface of the ISS and will be exposed to the space environment.

Failure – The generic reference to a loss of function or functional redundancy; specifically, the inability of a system, subsystem, string, ORU, component, or part to perform the required function(s) within specified limits.

Hazard – The presence of a potential risk situation caused by an unsafe act or condition. A condition or changing set of circumstances that presents a potential for adverse or harmful consequences; the inherent characteristics of an activity, condition or circumstance, which can produce adverse or harmful consequences.

Internal Cargo – Cargo whose final installed/consumed/used location must be protected form the space environment. This cargo typically must be protected from the space environment during the transportation phase.

Meteoroids and Orbital Debris (M/OD) Critical Item – An item is deemed to be M/OD-critical when effects resulting from meteoroid or orbital debris impact will endanger the crew or Space Station survivability.

Orbital Replacement Unit (ORU) – An ORU is a spare for any system or payload hardware item currently in use on ISS. Some ORUs/Cargo Items are stowed on ISS.

Payload(s) – Equipment associated with research and experiments; also the organization responsible for providing the payload cargo and associated products.

Payload Power – Power dedicated to payload operations within internal payload locations or at the external payload locations.

Pressurized Vehicle – A vehicle that carries internal cargo and protects that cargo from the space environment.

Definitions

Rapid Safing – Capability of the Orbiter to accomplish an emergency de-orbit or a de-orbit contingency to the next primary landing site.

Safe – A general term denoting relative freedom from and low probability of: personnel injury fatality, loss or damage to vehicles, equipment or facilities, or loss or excessive degradation of the function of critical equipment.

Shuttle Middeck Locker Equivalent (MLE) – Carries up to 54 lbs, and holds up to 2.03 ft3

System(s) – Equipment for assembly, logistics, and maintenance of the ISS; also the organization responsible for providing the system cargo and associated products.

Unpressurized Vehicle – A vehicle that carries external cargo exposed (partially or totally) to the space environment.

Utilization – Synonymous with Payloads. Sometimes used interchangeably.

EVR Stay Out Zones – Small Adapter Plate

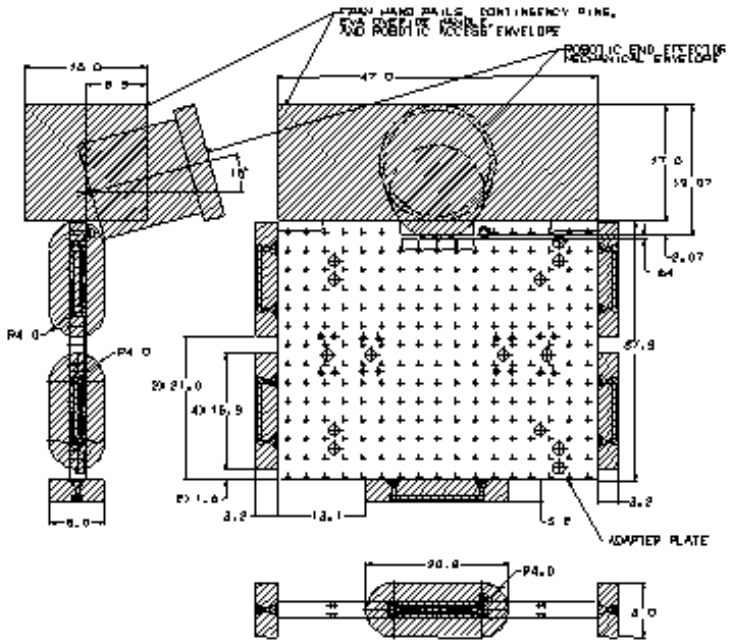

Active FRAM and Passive FRAM Assemblies

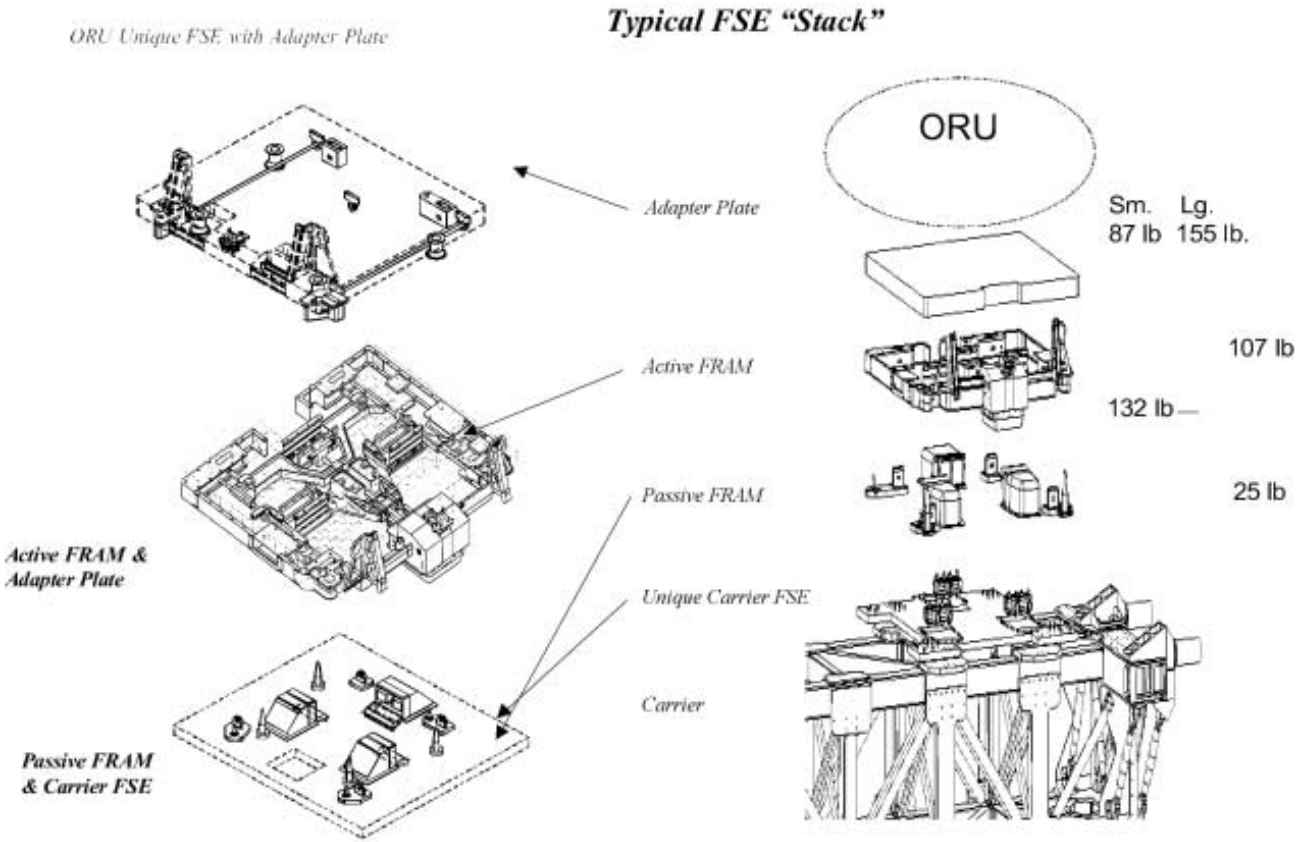

Standard Mid-deck Modular Locker

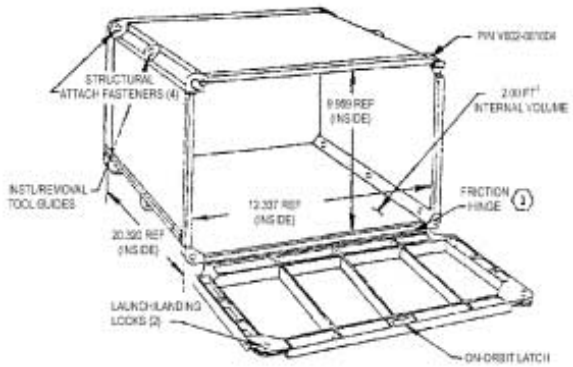

Power Data Grapple Fixture

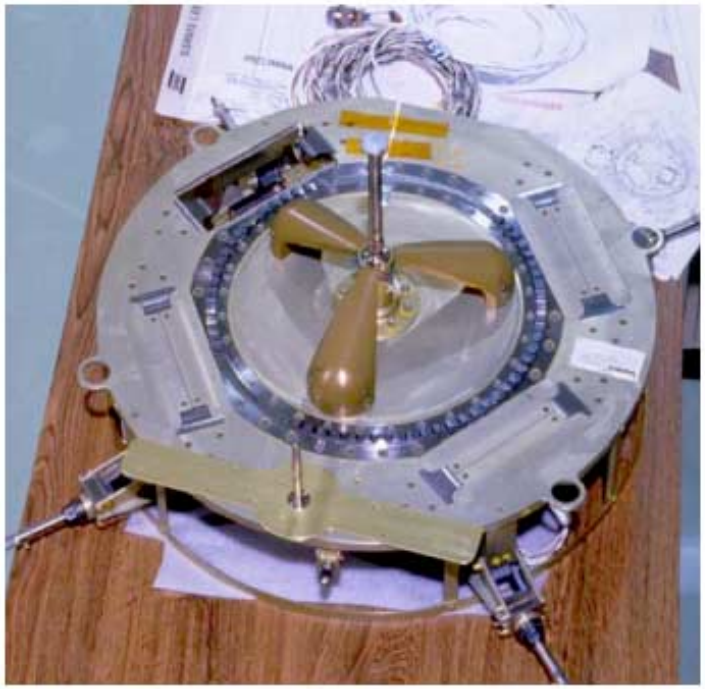

Active and passive EUTAS (Trunions)

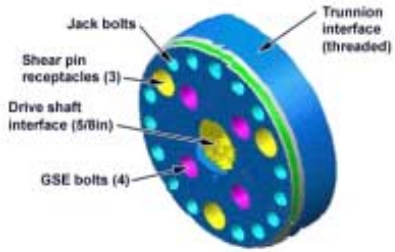

Passive EUTAS

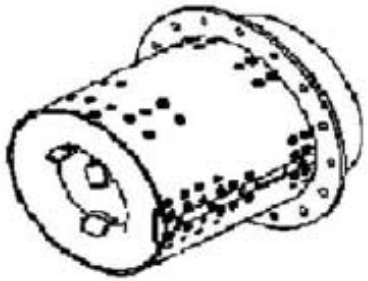

Active EUTAS

Payload Attach Site (PAS) and Unpressurized Logistics Carrier Attach System (ULCAS)

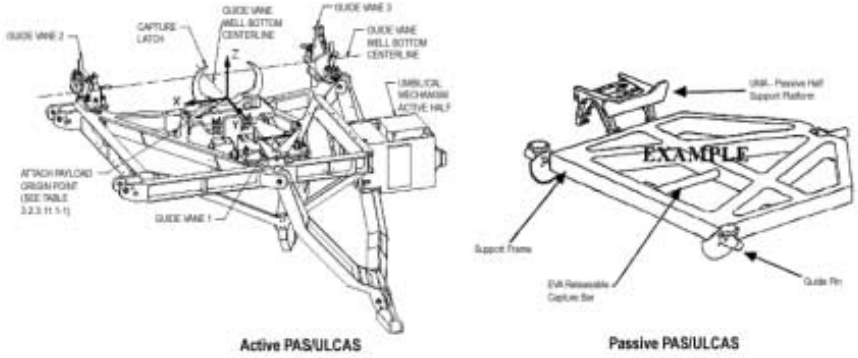

Active and passive PAS/ULCAS assemblies

Cargo Transfer Bags

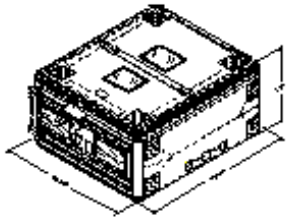

Full Size CTB without Windows

9.75" X 19.75" X 16.75"

Half Size CTB

9.75" X 9.75" X 16.75"

Full Size CTB with Windows

9.75" X 19.75" X 16.75"

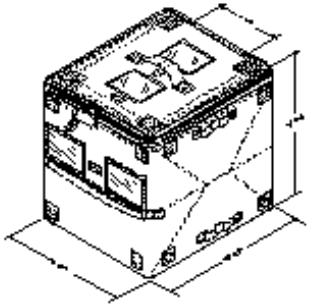

Double Size CTB

19.75" X 19.75" X 16.75"

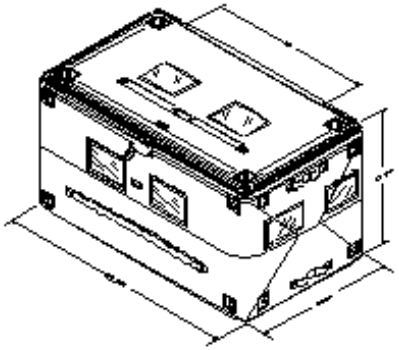

Triple Size CTB

19.75" X 16.75" X 29.5"

M-bags

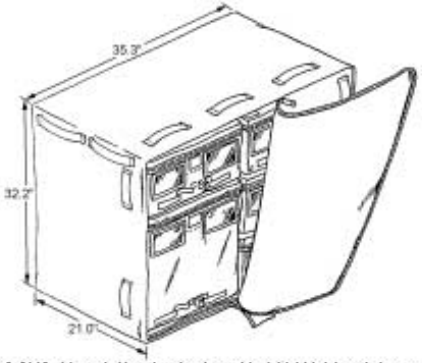

M01 Bag (illustrated with ONE Double and FOUR Full Cargo Transfer Bags)
35.3" x 21" x 32.2"

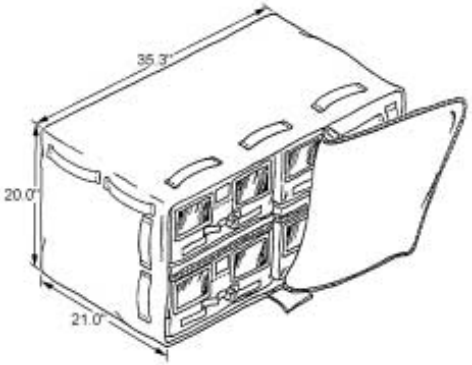

M02 Bag (illustrated with FOUR Full Cargo Transfer Bags)
35.3" x 21" x 20"

ISS Cargo and Stowage Vehicle Environments

VEHICLE	TEMPERATURE (OPERATING)	DEW POINT	PRESSURE	RATE OF PRESSURE CHANGE
Space Shuttle Middeck [1]	65 to 80 °F 18.3 to 26.6°C	36 to 61 °F	8 to 18.1 psia	± 2.0 psi/min
Spacehab [2]	65 to 80 °F 18.3 to 26.6 °C	41 to 63 °F	9.7 to 15.95 psia	± 2.0 psi/min ± 9.0 psi/min for contingency
MPLM [3]	51 to 115 °F 10.6 to 46.1 °C	60 °F Max	13.9 to 15.2 psia	+6.96/-7.74 psia/min
Russian Progress [4]	-60 to +120 °F * -17.7 to 48.9 °C	--	8.7 to 18.76 psia	--

1. Per NSTS –21000-IDD-MDK, section 6.1.
2. Per SpaceHab/Experiment Interface Definition Document, MDC91W5023B, section 6.0.
3. Per MPLM Cargo Accommodation Handbook (MCAH).
4. Per Requirements for International Partner Cargoes Transported on Russian Progress and Soyuz Vehicles, SS9651 (18 Aug. 1999)

* Non-operating temperature only

APPENDIX O
ACTION ITEM LOG

ID	Description	Assigned	Closed	Closure Rationale
01	Document basis for study assumptions in final report	12/13/01	02/07/02	Provided in Draft Final Report
02	Define two passive DRMs next week (electronic delivery)	12/13/01	12/20/01	As requested, two additional DRMs for the passive cases were provided to the MSFC AAS Office on 12-20-01.
03	Identify all reference documents in the Requirements Document	12/13/01	02/05/02	Provided in Draft AAS Performance Requirements Document delivered on Feb 5th via e-mail
04	Provide reference regarding Rapid Response capability (top/down bottom/up analysis, FEMA/CIL)	12/13/01	02/07/02	Provided in Draft Final Report
05	Re-label “business case” as “nominal case”	12/13/01	01/11/02	Note DRM Matrix provided initially at the AAS Interim Review and in use now. All descriptions now utilize terminology “nominal”.
06	Delete the 5 shuttle flights/year from the nominal traffic model case and replace with 3 and 2 Progress cases; Address cases as priority permits.	12/13/01	01/11/02	Note DRM Matrix provided at the AAS Interim Review. Traffic Model K – Nom, 3 Progress presented a three (3) Progress scenario. This scenario was ruled out for further investigation because it resulted in a negative ISS propellant margin.
07	Provided description of possible mounting areas on the truss (envelopes/restrictions) in the final report	12/13/01	02/05/02	Provided in Draft AAS Performance Requirements Document delivered on Feb 5th via e-mail
08	Provide, if possible, some additional data on the HTV and ATV	01/11/02	02/07/02	Provided in Draft Final Report

ID	Description	Assigned	Closed	Closure Rationale
09	Take a closer look at the pressurized temperature constraints that we have in the DRMs	01/11/02	02/05/02	Provided in Draft AAS Performance Requirements Document delivered on Feb 5th via e-mail
10	Provide info in the Final report that states what the 'sensitivity" studies did for us. What were the perturbations, What did we learn	01/11/02	02/07/02	Provided in the Final Review Presentation – Traffic Modeling Results. This chart indicates that the Nominal Mixed Case, the Minimum case and the Maximum Case spread covers all plausible scenarios
11	Take another look at the Payloads "limiting resources". Are we sure that the 30% addition to get to the next limiting resource is correct. Is it a Station constraint	01/11/02	02/05/02	Provided in Draft AAS Performance Requirements Document delivered on Feb 5th via e-mail
12	Provide more info on the ISS Risk associated with Stowage	01/11/02	02/07/02	Provided via e-mail from John Selmarten, USA ISS Payloads Office
13	Address solicitation questions submitted by J. Poe	01/28/02	01/28/02	As requested, these questions were addressed and the answers submitted that afternoon to the MSFC AAS Office on 01-28-02.