LMA790-3-LM 10 and Subsequent

APOLLO OPERATIONS HANDBOOK

LUNAR MODULE

LM 10 AND SUBSEQUENT

VOLUME I

SUBSYSTEMS DATA

Approved _____
Harlow K. Dunton, Ass't Program Director, Support

Approved _____
W. J. Everett, Program Manager, LM Publications Section

NAS 9-1100
Exhibit E Paragraph 10.4

TYPE I DOCUMENT

Prepared under direction of
THE NATIONAL AERONAUTICS AND SPACE ADMINISTRATION
SPACECRAFT SYSTEMS BRANCH / FLIGHT CREW SUPPORT DIVISION

THIS PUBLICATION SUPERSEDES LMA790-3-LM 8
AND SUBSEQUENT DATED 15 JUNE 1970

GRUMMAN

LM PUBLICATIONS SECTION / PRODUCT SUPPORT DEPARTMENT / GRUMMAN AEROSPACE CORPORATION / BETHPAGE / NEW YORK

1 APRIL 1971

LIST OF EFFECTIVE PAGES

INSERT LATEST CHANGED PAGES. DESTROY SUPERSEDED PAGES.

NOTE: The portion of the text affected by the changes is indicated by a vertical line in the outer margins of the page.

TOTAL NUMBER OF PAGES IN THIS PUBLICATION IS 746 CONSISTING OF THE FOLLOWING:

Page No.	Issue	Page No.	Issue
Title	15 June 1970	2.1-73 thru 2.1-75	Original
A thru E	15 June 1970	2.1-76	15 June 1970
i thru xii	15 June 1970	2.1-77 thru 2.1-78	Original
1-1	1 April 1971	2.1-79 thru 2.1-80	15 June 1970
1-2	Original	2.1-81	Original
1-3 thru 1-20	1 April 1971	2.1-82 thru 2.1-83	15 June 1970
2.1-1	15 June 1970	2.1-84	Original
2.1-2 thru 2.1-5	Original	2.1-85 thru 2.1-87	15 June 1970
2.1-6 thru 2.1-9	15 June 1970	2.1-88 thru 2.1-92	Original
2.1-10	Original	2.1-93	15 June 1970
2.1-11 thru 2.1-12	15 June 1970	2.1-94 thru 2.1-96	Original
2.1-13 thru 2.1-14	Original	2.1-97	15 June 1970
2.1-15	15 June 1970	2.1-98 thru 2.1-100	Original
2.1-16	Original	2.1-101 thru 2.1-103	15 June 1970
2.1-17 thru 2.1-21	15 June 1970	2.1-104 thru 2.1-111	Original
2.1-22	Original	2.1-112	15 June 1970
2.1-23	15 June 1970	2.1-113	Original
2.1-24	Original	2.1-114	15 June 1970
2.1-25 thru 2.1-29	15 June 1970	2.1-115 thru 2.1-123	Original
2.1-30 thru 2.1-32	Original	2.1-124 thru 2.1-130	15 June 1970
2.1-33	15 June 1970	2.1-131 thru 2.1-133	Original
2.1-34	Original	2.1-134 thru 2.1-135	15 June 1970
2.1-35 thru 2.1-36	15 June 1970	2.1-136 thru 2.1-137	Original
2.1-37	1 April 1971	2.1-138 thru 2.1-139	15 June 1970
2.1-38	1 April 1971	2.1-140	Original
2.1-39 thru 2.1-45	15 June 1970	2.1-141	15 June 1970
2.1-46 thru 2.1-47	Original	2.1-142 thru 2.1-144	Original
2.1-48 thru 2.1-51	15 June 1970	2.1-145 thru 2.1-146	15 June 1970
2.1-52	Original	2.1-147 thru 2.1-150	Original
2.1-52A thru 2.1-52B	15 June 1970	2.1-151 thru 2.1-156	15 June 1970
2.1-53 thru 2.1-55	15 June 1970	2.2-1 thru 2.2-2	1 April 1971
2.1-56	Original	2.2-3 thru 2.2-4	Original
2.1-57 thru 2.1-58	15 June 1970	2.2-5	1 April 1971
2.1-60	Original	2.2-6	15 June 1970
2.1-61 thru 2.1-62	15 June 1970	2.2-7 thru 2.2-8	1 April 1971
2.1-63	Original	2.2-9 thru 2.2-10	15 June 1970
2.1-64	15 June 1970	2.2-11 thru 2.2-12	1 April 1971
2.1-65 thru 2.1-69	Original	2.2-13	Original
2.1-70 thru 2.1-72	15 June 1970	2.2-14 thru 2.2-15	1 April 1971

*The asterisk indicates pages changed, added, or deleted by the current change.

NASA

Manuals will be distributed as directed by the NASA Apollo Project Office. All requests for manuals should be directed to the NASA Apollo Spacecraft Project Office at Houston, Texas.

LIST OF EFFECTIVE PAGES

INSERT LATEST CHANGED PAGES. DESTROY SUPERSEDED PAGES.

NOTE: The portion of the text affected by the changes is indicated by a vertical line in the outer margins of the page.

Page No.	Issue
2.2-16	Original
2.2-17	1 April 1971
2.2-19 thru 2.2-20	Original
2.2-21 thru 2.2-22	1 April 1971
2.2-23 thru 2.2-24	15 June 1970
2.2-25 thru 2.2-26	1 April 1971
2.2-27 thru 2.2-30	Original
2.2-31 thru 2.2-32	15 June 1970
2.2-33	1 April 1971
2.2-34	15 June 1970
2.2-35 thru 2.2-38	1 April 1971
2.2-39 thru 2.2-42	15 June 1970
2.3-1	Original
2.3-2	1 April 1971
2.3-3 thru 2.3-4	Original
2.3-5	15 June 1970
2.3-6 thru 2.3-10	1 April 1971
2.3-11	Original
2.3-12	1 April 1971
2.3-13 thru 2.3-14	Original
2.3-15	1 April 1971
2.3-16 thru 2.3-19	Original
2.3-20	15 June 1970
2.3-21 thru 2.3-22	Original
2.3-23 thru 2.3-29	1 April 1971
2.3-30	15 June 1970
2.3-31 thru 2.3-32	Original
2.3-33 thru 2.3-35	1 April 1971
2.3-36 thru 2.3-37	Original
2.3-38	15 June 1970
2.3-39	1 April 1971
2.3-40	15 June 1970
2.3-41	1 April 1971
2.3-42	15 June 1970
2.3-43 thru 2.3-44	1 April 1971
2.4-1 thru 2.4-24	1 April 1971
2.5-1	1 April 1971
2.5-2	Original
2.5-3 thru 2.5-34	1 April 1971
2.6-1 thru 2.6-8	1 April 1971
2.6-9	15 June 1970
2.6-10	1 April 1971
2.6-11	15 June 1970
2.6-12 thru 2.6-44	1 April 1971
2.7-1	1 April 1971
2.7-2	Original
2.7-3 thru 2.7-5	1 April 1971
2.7-6 thru 2.7-7	Original
2.7-8	1 April 1971
2.7-9 thru 2.7-16	Original
2.7-17	1 April 1971
2.7-18 thru 2.7-32	Original
2.7-33	1 April 1971
2.7-34 thru 2.7-36	Original
2.7-37 thru 2.7-39	1 April 1971
2.7-40	Original
2.7-41 thru 2.7-42	1 April 1971
2.7-43 thru 2.7-44	Original
2.8-1 thru 2.8-2	Original
2.8-3 thru 2.8-12	1 April 1971
2.8-13	Original
2.8-14 thru 2.8-15	1 April 1971
2.8-16	Original
2.8-17 thru 2.8-22	1 April 1971
2.9-1 thru 2.9-5	Original
2.9-6	15 June 1970
2.9-7	Original
2.9-8	1 April 1971
2.9-9 thru 2.9-20	Original
2.9-21 thru 2.9-22	1 April 1971
2.9-23 thru 2.9-25	Original
2.9-26	1 April 1971
2.9-27	15 June 1970
2.9-28 thru 2.9-49	Original
2.9-50	1 April 1971
2.9-51 thru 2.9-52	Original
2.9-53 thru 2.9-54	1 April 1971
2.9-55 thru 2.9-56	Original

*The asterisk indicates pages changed, added, or deleted by the current change.

NASA

Manuals will be distributed as directed by the NASA Apollo Project Office. All requests for manuals should be directed to the NASA Apollo Spacecraft Project Office at Houston, Texas.

LIST OF EFFECTIVE PAGES

INSERT LATEST CHANGED PAGES. DESTROY SUPERSEDED PAGES.

NOTE: The portion of the text affected by the changes is indicated by a vertical line in the outer margins of the page.

TOTAL NUMBER OF PAGES IN THIS PUBLICATION IS 746 CONSISTING OF THE FOLLOWING:

Page No.	Issue	Page No.	Issue
2.9-57 thru 2.9-58	1 April 1971	3-37	15 June 1970
2.9-59 thru 2.9-61	Original	3-38 thru 3-39	Original
2.9-62	1 April 1971	3-40 thru 3-43	1 April 1971
2.9-63	Original	3-44 thru 3-45	Original
2.9-64	15 June 1970	3-46 thru 3-49	1 April 1971
2.9-65 thru 2.9-70	Original	3-50	Original
2.9-71	15 June 1970	3-51 thru 3-52	15 June 1971
2.9-72	Original	3-53 thru 3-57	Original
2.9-73	15 June 1970	3-58	1 April 1971
2.9-74	Original	3-58A thru 3-58B	1 April 1971
2.9-75 thru 2.9-84	15 June 1970	3-59 thru 3-78	Original
2.10-1 thru 2.10-9	Original	3-79 thru 3-80	1 April 1971
2.10-10	1 April 1971	3-81 thru 3-88	Original
2.10-11 thru 2.10-12	15 June 1970	3-88A thru 3-88B	15 June 1970
2.11-1 thru 2.11-5	1 April 1971	3-89	1 April 1971
2.11-6	15 June 1970	3-90	15 June 1970
2.11-7 thru 2.11-10	1 April 1971	3-91 thru 3-92	Original
2.11-11 thru 2.11-12	Original	3-93	1 April 1971
2.11-13	15 June 1970	3-94 thru 3-100	Original
2.11-14	Original	3-100A thru 3-100B	15 June 1970
2.11-15	1 April 1971	3-101	1 April 1971
2.11-16 thru 2.11-17	15 June 1970	3-101 thru 3-106	Original
2.11-18 thru 2.11-20	1 April 1971	3-107	15 June 1970
2.11-21 thru 2.11-23	15 June 1970	3-108 thru 3-113	Original
2.11-24 thru 2.11-34	1 April 1971	3-114	15 June 1970
3-1	1 April 1971	3-115 thru 3-117	Original
3-2	15 June 1970	3-118	1 April 1971
3-3	1 April 1971	3-119	Original
3-4	15 June 1970	3-120 thru 3-126	1 April 1971
3-5	Original	3-126A thru 3-126B	1 April 1971
3-6 thru 3-7	1 April 1971	3-127 thru 3-130	1 April 1971
3-8	15 June 1970	3-131 thru 3-137	Original
3-9 thru 3-12	1 April 1971	3-138	1 April 1971
3-13 thru 3-18	Original	3-139 thru 3-147	Original
3-19	15 June 1970	3-148	1 April 1971
3-20 thru 3-23	Original	3-149 thru 3-154	Original
3-24	15 June 1970	3-155 thru 3-164	1 April 1971
3-25	Original	A-1 thru A-6	Original
3-26 thru 3-32	15 June 1970	B-1 thru B-2	Original
3-33 thru 3-35	Original	C-1 thru C-8	15 June 1970
3-36	1 April 1971	C-9 thru C-10	1 April 1971

*The asterisk indicates pages changed, added, or deleted by the current change.

NASA

Manuals will be distributed as directed by the NASA Apollo Project Office. All requests for manuals should be directed to the NASA Apollo Spacecraft Project Office at Houston, Texas.

C

CHANGE INFORMATION

This handbook is subject to continuous change or revision, on a priority basis, to reflect current Lunar Module or mission changes, or to improve content or arrangement. The content and the changes are accounted for by the List of Effective Pages, and the following means:

Record of Publication: The publication date of each basic issue and each change issue is listed below as a record of all editions.

Page Change Date: Each page in this handbook has space for entering a change date. The latest publication date will be entered in this space each time a page is changed from the basic issue.

COMMENTS

NASA Comments: NASA comments or suggested changes to this handbook should be directed to M. E. Dement, Flight Crew Support Division, Spacecraft Operations Branch, Building No. 4, MSC 2101 Webster Seabrook Road, Houston, Texas 77058.

GAC Comments: GAC comments or suggested changes to this handbook should be directed to the Product Support Department, LM Publications Section.

RECORD OF PUBLICATION

The issue of the Apollo Operations Handbook - LM, Volume 1, dated 15 December 1968, is the basic issue. Subsequent changes will be issued to maintain information current with all active Lunar Modules. This record will reflect the publication date of all changes.

Basic Date	Change Date
15 December 1968	15 March 1969
1 February 1970	15 June 1969
	15 September 1969
	15 June 1970
	1 April 1971

TABLE OF CONTENTS

Section		Page
1	SPACECRAFT	
	Introduction	1-1
1.1	LM Configuration	1-1
1.2	Ascent Stage	1-1
1.2.1	General Description	1-1
1.2.2	Structure	1-1
1.3	Descent Stage	1-18
1.3.1	General Description	1-18
1.3.2	Structure	1-18
1.4	LM - SLA - S-IVB Connections	1-22
1.5	LM-CSM Interfaces	1-23
1.5.1	Crew Transfer Tunnel	1-23
1.6	Stowage Provisions	1-24
2	SUBSYSTEMS DATA	
2.1	Guidance, Navigation, and Control Subsystem	2.1-1
2.1.1	Introduction	2.1-1
2.1.2	Subsystem Interfaces	2.1-18
2.1.3	Functional Description	2.1-21
2.1.4	Major Component/Functional Description	2.1-44
2.1.5	Performance and Design Data	2.1-145
2.1.6	Operational Limitations and Restrictions	2.1-154
2.2	Radar Subsystem	2.2-1
2.2.1	Introduction	2.2-1
2.2.2	Subsystem Interfaces	2.2-1
2.2.3	Functional Description	2.2-1
2.2.4	Major Component/Functional Description	2.2-26
2.2.5	Performance and Design Data	2.2-38
2.2.6	Operational Limitations and Restrictions	2.2-41
2.3	Main Propulsion Subsystem	2.3-1
2.3.1	Introduction	2.3-1
2.3.2	Descent Propulsion Section Interfaces	2.3-2
2.3.3	Descent Propulsion Section Functional Description	2.3-5
2.3.4	Descent Propulsion Section Major Component/Functional Description	2.3-15
2.3.5	Descent Propulsion Section Performance and Design Data	2.3-25
2.3.6	Descent Propulsion Section Operational Limitations and Restrictions	2.3-28

TABLE OF CONTENTS (cont)

Section		Page
2.3.7	Ascent Propulsion Section Interfaces	2.3-29
2.3.8	Ascent Propulsion Section Functional Description	2.3-29
2.3.9	Ascent Propulsion Section Major Component/Functional Description	2.3-38
2.3.10	Ascent Propulsion Section Performance and Design Data	2.3-42
2.3.11	Ascent Propulsion Section Operational Limitations and Restrictions	2.3-44
2.4	Reaction Control Subsystem	2.4-1
2.4.1	Introduction	2.4-1
2.4.2	Subsystem Interfaces	2.4-2
2.4.3	Functional Description	2.4-5
2.4.4	Major Component/Functional Description	2.4-16
2.4.5	Performance and Design Data	2.4-19
2.4.6	Operation Limitations and Restrictions	2.4-21
2.5	Electrical Power Subsystem	2.5-1
2.5.1	Introduction	2.5-1
2.5.2	Subsystem Interfaces	2.5-1
2.5.3	Functional Description	2.5-3
2.5.4	Major Component/Functional Description	2.5-22
2.5.5	Performance and Design Data	2.5-29
2.5.6	Operational Limitations and Restrictions	2.5-30
2.6	Environmental Control Subsystem	2.6-1
2.6.1	Introduction	2.6-1
2.6.2	Subsystem Interfaces	2.6-7
2.6.3	Functional Description	2.6-8
2.6.4	Major Component/Functional Description	2.6-22
2.6.5	Performance and Design Data	2.6-38
2.6.6	Operational Limitations and Restrictions	2.6-43
2.7	Communications Subsystem	2.7-1
2.7.1	Introduction	2.7-1
2.7.2	Subsystem Interfaces	2.7-2
2.7.3	Functional Description	2.7-3
2.7.4	Major Component/Functional Description	2.7-9
2.7.5	Performance and Design Data	2.7-41
2.7.6	Operational Limitations and Restrictions	2.7-41
2.8	Explosive Devices Subsystem	2.8-1
2.8.1	Introduction	2.8-1
2.8.2	Interfaces	2.8-3
2.8.3	Functional Description	2.8-3
2.8.4	Major Component/Functional Description	2.8-15
2.8.5	Performance and Design Data	2.8-20
2.8.6	Operational Limitations and Restrictions	2.8-21
2.9	Instrumentation Subsystem	2.9-1
2.9.1	Introduction	2.9-1
2.9.2	Subsystem Interfaces	2.9-1
2.9.3	Functional Description	2.9-2
2.9.4	Major Component/Functional Description	2.9-6
2.9.5	Performance and Design Data	2.9-75
2.9.6	Operational Limitations and Restrictions	2.9-83

TABLE OF CONTENTS (cont)

Section			Page
	2.10	Lighting	2.10-1
	2.10.1	Introduction	2.10-1
	2.10.2	Functional Description	2.10-1
	2.10.3	Performance and Design Data	2.10-11
	2.10.4	Operational Limitations and Restrictions	2.10-12
	2.11	Crew Personal Equipment	2.11-1
	2.11.1	Introduction	2.11-1
	2.11.2	Extravehicular Mobility Unit	2.11-1
	2.11.3	Umbilical Assembly	2.11-17
	2.11.4	Crew Life Support	2.11-19
	2.11.5	Crew Support and Restraint Equipment	2.11-21
	2.11.6	Docking Aids and Tunnel Hardware	2.11-22
	2.11.7	Crew Miscellaneous Equipment	2.11-24
	2.11.8	Modularized Equipment Stowage Assembly	2.11-25
	2.11.9	Stowage Locations	2.11-25
	2.11.10	Apollo Lunar Surface Experiment Package	2.11-30
	2.11.11	Lunar Communication Relay Unit	2.11-30
3	CONTROLS AND DISPLAYS		
4	NORMAL/BACKUP PROCEDURES		4.0-1*
5	CONTINGENCY PROCEDURES		5.0-1*
	ABBREVIATION LIST		A-1
	SYMBOLS		B-1
	ALPHABETICAL INDEX		C-1

*Apollo Operations Handbook, Volume II, Operational Procedures

LIST OF ILLUSTRATIONS

Figure No.		Page
1-1	Apollo-Saturn Space Vehicle	1-2
1-2	LM Configuration	1-4
1-3	LM Overall Dimensions	1-5
1-4	Station Reference Measurements	1-6
1-5	Ascent Stage Structure Configuration	1-7
1-6	Flight Positions	1-8
1-7	Cabin Interior (Looking Forward)	1-11
1-8	Forward Hatch	1-12
1-9	Front Window	1-13
1-10	Docking Window	1-13
1-11	Cabin Interior (Looking Aft)	1-15
1-12	Overhead Hatch	1-16
1-13	Descent Stage Structure Configuration	1-19
1-14	Landing Gear	1-21
1-15	LM-CSM Reference Axis	1-23
2.1-1	GN&CS - Major Equipment Location	2.1-1
2.1-2	GN&CS Simplified Block Diagram and Subsystem Interfaces	2.1-3
2.1-3	Primary Guidance and Navigation Section - Block Diagram	2.1-5
2.1-4	Alignment Optical Telescope	2.1-8
2.1-5	Display and Keyboard Assembly	2.1-9
2.1-6	Abort Guidance Section - Block Diagram	2.1-10
2.1-7	Data Entry and Display Assembly - Pictorial	2.1-11
2.1-8	Control Electronics Section - Block Diagram	2.1-13
2.1-9	ACA Manipulations	2.1-15
2.1-10	TTCA Manipulations	2.1-16
2.1-11	LM Vehicle and GN&CS Axes	2.1-18
2.1-12	Alignment Optical Telescope Axes	2.1-19
2.1-13	Primary Guidance Path - Simplified Block Diagram	2.1-22
2.1-14	Abort Guidance Path - Simplified Block Diagram	2.1-24
2.1-15	Primary Guidance and Navigation Section - Functional Flow Diagram	2.1-25
2.1-16	Abort Guidance Section - Functional Flow Diagram	2.1-28
2.1-17	Attitude and Translation Control Schematic (2 Sheets)	2.1-33
2.1-18	Descent Engine Control Schematic (2 Sheets)	2.1-38
2.1-19	Ascent Engine Control Schematic (2 Sheets)	2.1-39
2.1-20	GN&CS Power Distribution (2 Sheets)	2.1-41
2.1-21	800-cps Synchronization Loop	2.1-45
2.1-22	Inertial Subsection - Functional Diagram	2.1-46
2.1-23	Navigation Base	2.1-47
2.1-24	IMU Gimbal Assembly	2.1-47
2.1-25	IMU Temperature Control	2.1-50
2.1-26	IMU Forced Convection Cooling	2.1-51
2.1-27	CDU Digital-to-Analog and Analog-to-Digital Conversion - Functional Diagram	2.1-52
2.1-28	Inertial Subsection - Functional Loops	2.1-57
2.1-29	Inertial Subsection - Modes of Operation	2.1-58
2.1-30	Alignment Optical Telescope - Optical Schematic	2.1-63
2.1-31	Alignment Optical Telescope - Reticle Pattern	2.1-65
2.1-32	LM Guidance Computer - Functional Flow Diagram	2.1-67
2.1-33	Display and Keyboard Assembly - Block Diagram	2.1-78
2.1-34	Abort Sensor Assembly - Block Diagram	2.1-84

LIST OF ILLUSTRATIONS (cont)

Figure No.		Page
2.1-35	Abort Guidance Section - Gyro Assembly	2.1-86
2.1-36	Abort Electronics Assembly - Block Diagram	2.1-91
2.1-37	Data Entry and Display Assembly - Detailed Block Diagram	2.1-100
2.1-38	Euler Angles	2.1-110
2.1-39	Canted Thrust Selection Logic	2.1-118
2.1-40	ACA - Angular Displacements	2.1-123
2.1-41	ACA - Functional Diagrams	2.1-124
2.1-42	TTCA - Angular Displacements	2.1-125
2.1-43	TTCA - Functional Diagram	2.1-126
2.1-44	Attitude and Translation Control Assembly - Simplified Block Diagram (Attitude Hold and Auto Mode)	2.1-127
2.1-45	Attitude and Translation Control Assembly - Detailed Block Diagram	2.1-131
2.1-46	ATCA - Jet Select Logic	2.1-133
2.1-47	Rate Gyro Assembly - Schematic and Vector Diagram	2.1-136
2.1-48	Descent Engine Control Assembly - Simplified Block Diagram	2.1-137
2.1-49	Descent Engine Control Assembly - Throttle Control Diagram	2.1-138
2.1-50	Descent Engine Control Assembly - Trim Control Diagram	2.1-139
2.1-51	Descent Engine Control Assembly - Engine Control Diagram	2.1-140
2.1-52	Throttle Control vs TTCA Displacement	2.1-141
2.1-53	Gimbal Drive Actuator	2.1-142
2.1-54	Ascent Engine Arming Assembly - Functional Diagram	2.1-143
2.1-55	Ascent Engine Arming Assembly - Schematic Diagram	2.1-144
2.1-56	Gimbal Angle Sequence Transformation Assembly Schematic Diagram	2.1-147
2.1-57	Orbital Rate Display - Earth and Lunar - Schematic Diagram	2.1-149
2.2-1	LM Rendezvous Radar and CSM Target Orientation	2.2-2
2.2-2	Rendezvous Radar - Block Diagram	2.2-3
2.2-3	Rendezvous Radar - Antenna Assembly	2.2-5
2.2-4	Rendezvous Radar - Functional Flow Diagram	2.2-9
2.2-5	Rendezvous Radar - Antenna Orientation No. I	2.2-11
2.2-6	Rendezvous Radar - Antenna Orientation No. II	2.2-12
2.2-7	Transponder Electronic Assembly - Block Diagram	2.2-13
2.2-8	Transponder - Functional Flow Diagram	2.2-14
2.2-9	Landing Radar - Simplified Block Diagram	2.2-16
2.2-10	Landing Radar - Block Diagram	2.2-19
2.2-11	Landing Radar - Functional Flow Diagram	2.2-23
2.2-12	Landing Radar - Antenna Beam Configuration	2.2-25
2.2-13	Rendezvous Radar Digital Data Transfer - Functional Flow Diagram	2.2-30
2.2-14	Transponder Antenna Assembly	2.2-32
2.2-15	Landing Radar Antenna Assembly	2.2-34
2.3-1	Descent Propulsion Section - Component Location	2.3-1
2.3-2	Descent Propulsion Section - Interface Diagram	2.3-3
2.3-3	Descent Propulsion Section - Simplified Functional Flow Diagram	2.3-8
2.3-4	Propellant Quantity Gaging System - Simplified Functional Block Diagram	2.3-11
2.3-5	Descent Engine Assembly - Flow Diagram	2.3-13
2.3-6	Descent Engine and Head End Assembly	2.3-14
2.3-7	Descent Propulsion Section - Explosive Valves, Simplified Functional Diagram	2.3-16
2.3-7A	Cryogenic Helium Storage Vessel - Burst Disk Assembly	2.3-16A
2.3-8	Helium Isolation Solenoid Valve, Latched-Open Position	2.3-17
2.3-9	Descent Propulsion Section - Helium Pressure Regulators	2.3-18
2.3-10	Descent Propulsion Section - Relief Valve Assembly	2.3-19
2.3-11	Descent Propulsion Section - Burst Disk Assembly	2.3-20
2.3-12	Throttle Valve Actuator - Block Diagram	2.3-21
2.3-13	Flow Control Valve	2.3-23
2.3-14	Variable-Area Injector - Quarter Section	2.3-24

LIST OF ILLUSTRATIONS (cont)

Figure No.		Page
2.3-15	Descent Engine Combustion Chamber, Nozzle Extension, and Heat Shield	2.3-25
2.3-16	Ascent Propulsion Section - Interface Diagram	2.3-31
2.3-17	Ascent Propulsion Section - Component Location	2.3-32
2.3-18	Ascent Propulsion Section - Simplified Functional Flow Diagram	2.3-33
2.3-19	Ascent Engine Assembly - Flow Diagram	2.3-36
2.3-20	Ascent Propulsion Section - Explosive Valves, Simplified Functional Diagram	2.3-37
2.3-21	Ascent Propulsion Section - Helium Pressure Regulator Assembly	2.3-38
2.3-22	Ascent Propulsion Section - Relief Valve Assembly	2.3-40
2.3-23	Ascent Engine Assembly	2.3-41
2.4-1	Reaction Control Subsystem - Component Location	2.4-1
2.4-2	Reaction Control Subsystem - Interface Diagram	2.4-3
2.4-3	Reaction Control Subsystem - Simplified Functional Flow Diagram (3 Sheets)	2.4-7
2.4-4	RCS System A - Ascent Feed Interconnect Valve Arrangement	2.4-9
2.4-5	Propellant Quantity Measuring Device	2.4-10
2.4-6	Thrust Chamber Assembly and Cluster	2.4-11
2.4-7	Thrust Chamber Assembly - Operation and Failure Detection System	2.4-12
2.4-8	TCA Firing - Thrust Versus Time	2.4-13
2.4-9	Reaction Control Subsystem - Thruster-On Failure Correction	2.4-15
2.4-10	Helium Pressure Regulator Assembly	2.4-17
2.4-11	Relief Valve Assembly	2.4-17
2.4-12	Propellant Tank Assembly	2.4-18
2.4-13	Reaction Control Subsystem - Telemetry Points	2.4-23
2.5-1	Electrical Power Subsystem - Signal Interface Block Diagram	2.5-2
2.5-2	Electrical Power Subsystem - Power Interface Diagram (3 Sheets)	2.5-5
2.5-3	Electrical Power Subsystem - Functional Flow Diagram	2.5-9
2.5-4	Descent Power Distribution - Functional Block Diagram	2.5-10
2.5-5	Ascent Power Distribution - Functional Block Diagram	2.5-11
2.5-6	Battery Status-Monitoring Circuits - Simplified Schematic Diagram	2.5-12
2.5-7	Battery Voltage- and Current-Monitoring Circuits - Simplified Schematic Diagram	2.5-15
2.5-8	Primary Bus Voltage-Monitoring Circuits - Simplified Schematic Diagram	2.5-17
2.5-9	Malfunctioning-Battery Isolation Circuitry - Simplified Schematic Diagram	2.5-18
2.5-10	Relay Junction Box - Functional Block Diagram	2.5-20
2.5-11	CSM/LM Primary Power Transfer Logic - Simplified Schematic Diagram	2.5-21
2.5-12	Deadface Relay and Staging Logic - Simplified Schematic Diagram	2.5-23
2.5-13	Descent Stage Electrical Control Assembly - Simplified Schematic Diagram	2.5-25
2.5-14	Ascent Stage Electrical Control Assembly - Simplified Schematic Diagram	2.5-27
2.5-15	Inverter No. 1 - Block Diagram	2.5-28
2.5-16	Sensor Power Fuse Assemblies - Simplified Power Distribution Diagram	2.5-31
2.6-1	Environmental Control Subsystem - Component Location (3 Sheets)	2.6-1
2.6-2	Environmental Control Subsystem - Controls	2.6-4
2.6-3	Environmental Control Subsystem Power Distribution Diagram	2.6-5
2.6-4	Environmental Control Subsystem Functional Flow Diagram	2.6-6
2.6-5	Environmental Control Subsystem Electrical Schematic Diagram (2 Sheets)	2.6-9
2.6-6	ARS Simplified Functional Flow Diagram	2.6-11
2.6-6A	Suit Liquid Cooling Assembly - Schematic Flow Diagram	2.6-13
2.6-7	Oxygen Supply and Cabin Pressure Control Section	2.6-15
2.6-8	Water Management Section - Simplified Functional Flow Diagram	2.6-17
2.6-9	Heat Transport Section - Simplified Function Flow Diagram	2.6-19
2.6-10	Suit Gas Diverter Valve - Functional Schematic	2.6-22
2.6-11	Water Separator - Functional Schematic	2.6-24
2.6-12	Suit Isolation Valve - Functional Schematic	2.6-25

LIST OF ILLUSTRATIONS (cont)

Figure No.		Page
2.6-13	Carbon Dioxide Partial Pressure Sensor - Functional Schematic	2.6-26
2.6-14	High-Pressure Oxygen Control Assembly - Functional Schematic	2.6-27
2.6-15	High-Pressure Oxygen Regulator - Functional Schematic	2.6-28
2.6-16	Bypass Oxygen Relief Valve - Functional Schematic	2.6-28
2.6-17	Overboard Relief Valve - Functional Schematic	2.6-29
2.6-18	Burst Diaphragm Assembly - Functional Schematic	2.6-30
2.6-19	Oxygen Demand Regulator - Functional Schematic	2.6-31
2.6-20	Cabin Repressurization and Emergency Oxygen Valve - Functional Schematic	2.6-31
2.6-21	Cabin Relief and Dump Valve - Functional Schematic	2.6-33
2.6-22	Water Tank Selector Valve - Functional Schematic	2.6-35
2.6-23	Water Pressure Regulator - Functional Schematic	2.6-36
2.7-1	Communications Subsystem, Interface Diagram	2.7-2
2.7-2	Communications Subsystem - Simplified Block Diagram	2.7-4
2.7-3	Communications Subsystem, Power Distribution Diagram	2.7-5
2.7-4	In-Flight Communications	2.7-7
2.7-4A	Lunar Surface Communications	2.7-8
2.7-5	S-Band Transmitter Receiver - Block Diagram	2.7-17
2.7-6	S-Band Transmitter - Block Diagram	2.7-18
2.7-7	S-Band Receiver - Block Diagram	2.7-20
2.7-8	S-Band Power Amplifier - Block Diagram	2.7-21
2.7-9	VHF Equipment - Block Diagram	2.7-22
2.7-10	VHF Transmitter A - Block Diagram	2.7-23
2.7-11	VHF Transmitter B - Block Diagram	2.7-24
2.7-12	VHF Receiver - Block Diagram	2.7-26
2.7-13	Signal-Processing Assembly - Block Diagram	2.7-27
2.7-14	Premodulation Processor - Block Diagram	2.7-28
2.7-15	Audio Center No. 1 - Block Diagram	2.7-31
2.7-16	Audio Control Circuits - Simplified Block Diagram	2.7-32
2.7-17	Digital Uplink Assembly - Block Diagram	2.7-33
2.7-18	VHF Ranging Circuits - Block Diagram	2.7-34
2.7-19	Ranging Tone Transfer Assembly - Block Diagram	2.7-36
2.7-20	Ranging Tone Transfer Assembly - Timing Diagram	2.7-37
2.7-21	Communication Subsystem - Antenna Location	2.7-38
2.7-22	S-Band Steerable Antenna - Block Diagram	2.7-39
2.7-23	S-Band Steerable Antenna Gimbaling	2.7-40
2.7-24	S-Band Steerable Antenna - Vehicle Blockage Diagram	2.7-43
2.8-1	Explosive Devices Subsystem - Component Location	2.8-1
2.8-2	Explosive Devices - Overall Block Diagram	2.8-2
2.8-3	Explosive Devices Subsystem - Overall Functional Diagram	2.8-4
2.8-4	Stage Sequence (Relays K2 through K6) Monitoring - Simplified Schematic Diagram	2.8-5
2.8-5	Bus - Arming Control - Simplified Schematic Diagram	2.8-7
2.8-6	Landing Gear Deployment - Simplified Schematic Diagram	2.8-8
2.8-7	Landing Gear Switches - Simplified Schematic Diagram	2.8-9
2.8-8	Descent Propellant Tank Prepressurization - Simplified Schematic Diagram	2.8-10
2.8-9	Stage Sequence - Simplified Schematic Diagram	2.8-11
2.8-10	Ascent Propellant Tank Pressurization - Simplified Schematic Diagram	2.8-13
2.8-11	RCS Propellant Tank Pressurization	2.8-14
2.8-12	Explosive Devices	2.8-16
2.8-13	Electrical Circuit Interrupter - Functional Block Diagram	2.8-19
2.9-1	Instrumentation Power Distribution - Overall Functional Block Diagram	2.9-3
2.9-2	Instrumentation Subsystem - Overall Functional Block Diagram	2.9-4
2.9-3	Data Format No. 1 (Normal Mode)	2.9-5

LIST OF ILLUSTRATIONS (cont)

Figure No.		Page
2.9-4	Data Format No. 2 (Reduced Mode)	2.9-7
2.9-5	Typical Analog Multiplexer Card - Simplified Logic Diagram	2.9-35
2.9-6	High-Level Analog Multiplexer Card - Simplified Logic Diagram	2.9-36
2.9-7	High-Speed Gates - Logic Diagram	2.9-37
2.9-8	Analog-to-Digital Converter (Coder) - Simplified Logic Diagram	2.9-38
2.9-9	Programmer - Block Diagram	2.9-39
2.9-10	Digital Multiplexer - Logic Diagram	2.9-41
2.9-11	Output Register	2.9-43
2.9-12	Timing Electronics - Logic Diagram	2.9-45
2.9-13	CWEA - Functional Block Diagram	2.9-47
2.9-14	Master Alarm Pushbutton/Lights and C/W PWR Caution Light - Simplified Schematic Diagram	2.9-49
2.9-15	CWEA Failure Detection Circuits - Logic Diagram (3 Sheets)	2.9-57
2.9-16	DSEA - Functional Block Diagram	2.9-74
2.10-1	Lighting Control Equipment	2.10-3
2.10-1A	Lunar Contact Lights Circuits	2.10-4B
2.10-2	Lighting Circuits	2.10-5
2.10-3	Exterior Lighting	2.10-8
2.10-4	Floodlighting and Utility Lights - Simplified Diagram	2.10-9
2.10-5	Lamp and Tone Test Circuits	2.10-10
2.11-1	Extravehicular Mobility Unit	2.11-2
2.11-2	Pressure Garment Assembly	2.11-3
2.11-3	Integral Thermal Micrometeoroid Garment, PLSS, OPS, and PLSS Control Box	2.11-4
2.11-4	Extravehicular Visor Assembly	2.11-7
2.11-5	PLSS Controls and Indicators	2.11-8
2.11-6	Portable Life Support Subsystem - Simplified Functional Schematic	2.11-9
2.11-7	EMU Electrical Connectors	2.11-14
2.11-8	PLSS Condensate Transfer - Schematic Diagram	2.11-17
2.11-9	Buddy System, Schematic Diagram	2.11-18
2.11-10	Restraint Equipment	2.11-21
2.11-11	Crewman Optical Alignment Sight	2.11-22
2.11-12	COAS Functional Schematic and Docking Targets	2.11-23
2.11-13	Tool B	2.11-24
2.11-14	Modularized Equipment Stowage Assembly	2.11-25
2.11-15	Deployment of Modularized Equipment Stowage Assembly	2.11-26
2.11-16	Modularized Equipment Stowage Assembly Application	2.11-27
2.11-17	Modularized Equipment Stowage Assembly Heater Circuits	2.11-27
2.11-18	LM Cabin Interior, Forward View	2.11-28
2.11-19	LM Cabin Interior, Aft View	2.11-29
2.11-20	Apollo Lunar Surface Equipment Package	2.11-30
2.11-21	Off - Loading of ALSEP	2.11-31
2.11-22	Laser Ranging Retroreflector	2.11-32
2.11-23	Fuel Capsule Transfer	2.11-33
2.11-24	Apollo Lunar Surface Package Deployed (Typical)	2.11-34
3-1	Environmental Control Subsystem Aft Bulkhead Controls	3-155
3-2	Controls and Displays	3-157

LIST OF TABLES

Table No.		Page
2.1-1	Control Electronics Section - Summary of Modes of Attitude Control	2.1-31
2.1-2	Signal Conditioner Assembly - Signal Conditioning Modules	2.1-54
2.1-3	LGC Input-Output Channel Assignments	2.1-73
2.1-4	Channel 7 Radar Fixed Extension Bits	2.1-75
2.1-5	Abort Electronics Assembly - Input Signal Characteristics	2.1-94
2.1-6	Abort Electronics Assembly - Output Signal Characteristics	2.1-95
2.1-7	Abort Electronics Assembly - Telemetry Word List	2.1-97
2.1-8	PGNS Downlink Data Update Sequence	2.1-105
2.1-9	Abort Guidance Section - Calibration Compensations	2.1-112
2.1-10	Abort Guidance Section - Guidance Routines	2.1-113
2.1-11	Time (Minutes) Quantities Available in CDH Mode	2.1-116
2.1-12	Time (Minutes) of Interest for TPI Search Routine	2.1-116
2.1-13	Time (Minutes) of Interest for TPI Execute Routine	2.1-117
2.1-14	Abort Guidance Section - Translational Thrust	2.1-118
2.1-15	Abort Guidance Section - Thrust Directions	2.1-121
2.1-16	RCS Jet Select Logic - Rotational Maneuver	2.1-134
2.1-17	RCS Jet Select Logic - Translational Maneuver	2.1-135
2.1-18	Primary Guidance and Navigation Section - Performance and Design Data	2.1-145
2.1-19	Abort Guidance Section - Performance and Design Data	2.1-152
2.1-20	Control Electronics Section - Performance and Design Data	2.1-152
2.1-21	Orbital Rate Display - Earth and Lunar - Performance and Design Data	2.1-153
2.2-1	Frequency Synthesizer - Output Frequencies	2.2-28
2.2-2	Rendezvous Radar and Transponder - Performance and Design Data	2.2-38
2.2-3	Landing Radar - Performance and Design Data	2.2-40
2.3-1	Descent Propulsion Section - Performance and Design Data	2.3-25
2.3-2	Ascent Propulsion Section - Performance and Design Data	2.3-42
2.4-1	Reaction Control Subsystem - Performance and Design Data	2.4-19
2.5-1	Circuit Breaker Characteristics	2.5-29
2.5-2	Electrical Power Subsystem - Performance and Design Data	2.5-29
2.6-1	Environmental Control Subsystem - Performance and Design Data	2.6-38
2.7-1	Communications Links	2.7-6
2.7-2	Communications Subsystem - General Switch and Circuit Breaker Configuration	2.7-10
2.7-3	S-Band Communications Capabilities	2.7-16
2.7-4	Communications Subsystem - Performance and Design Data	2.7-42
2.8-1	Explosive Devices Subsystem - Performance and Design Data	2.8-20
2.9-1	ERA-1 Conditioned and Preconditioned Interfacing Signals	2.9-7
2.9-2	ERA-2 Conditioned and Preconditioned Interfacing Signals	2.9-19
2.9-3	Caution and Warning Electronics Assembly - Malfunction Data Summary	2.9-61
2.9-4	Instrumentation Subsystem - Performance and Design Data	2.9-75
2.10-1	Exterior Lights - Color, Brightness, and Lighting Method	2.10-6
2.10-2	Interior Lights - Color, Brightness, and Lighting Method	2.10-6
2.10-3	Exterior Lights - Performance and Design Data	2.10-11
2.10-4	Interior Lights - Performance and Design Data	2.10-11
3-1	Controls and Displays - Alphabetical Index	3-2

SECTION 1

SPACECRAFT

INTRODUCTION

This section includes descriptions of the LM, the LM - SLA - S-IVB connections, the LM-CSM interfaces, and LM stowage provisions. The Apollo-Saturn space vehicle configuration is shown in figure 1-1.

1.1 LM CONFIGURATION. (See figure 1-2.)

The LM is designed for manned lunar landing missions. It consists of an ascent stage and a descent stage; the stages are joined together at four interstage fittings by explosive nuts and bolts. Subsystem continuity between the stages is accomplished by separable interstage umbilicals and hardline connections.

Both stages function as a single unit during lunar orbit, until separation is required. Stage separation is accomplished by explosively severing the four interstage nuts and bolts, the interstage umbilicals, and the water lines. All other hardlines are disconnected automatically at stage separation. The ascent stage functions as a single unit to accomplish rendezvous and docking with the CSM. The overall dimensions of LM are given in figure 1-3. Station reference measurements (figure 1-4) are established as follows:

- The Z- and Y-axis station reference measurements (inches) start at a point where both axes intersect the X-axis at the vehicle vertical centerline: the Z-axis extends forward and aft of the intersection; the Y-axis, left and right. The point of intersection is established as zero.
- The +Y-axis measurements increase to the right from zero; the -Y-axis measurements increase to the left. Similarly, the +Z- and -Z-axis measurements increase forward (+Z) and aft (-Z) from zero.
- The X-axis station reference measurements (inches) start at a design reference point identified as station +X200.000. This reference point is approximately 128 inches above the bottom surface of the footpads (with the landing gear extended); therefore, all X-axis station reference measurements are +X-measurements.

1.2 ASCENT STAGE.

1.2.1 GENERAL DESCRIPTION.

The ascent stage, the control center and manned portion of the LM, accommodates two astronauts. It comprises three main sections: the crew compartment, midsection, and aft equipment bay. The crew compartment and midsection make up the cabin, which has an approximate overall volume of 235 cubic feet. The cabin is climate controlled, and pressurized to 4.8±0.2 psig. Areas other than the cabin are unpressurized.

1.2.2 STRUCTURE. (See figure 1-5.)

The ascent stage has six structural areas: crew compartment, midsection, aft equipment bay, thrust chamber assembly (TCA) cluster supports, antenna supports, and thermal and micrometeoroid shield.

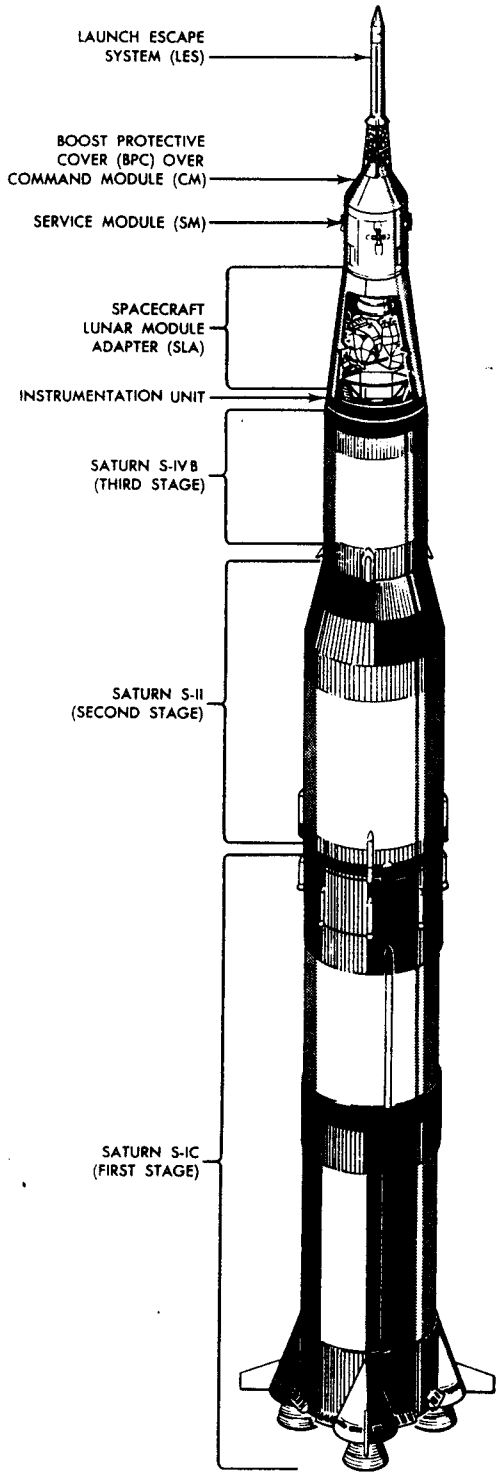

LUNAR MODULE (LM)

0-300LM4-25

Figure 1-1. Apollo-Saturn Space Vehicle

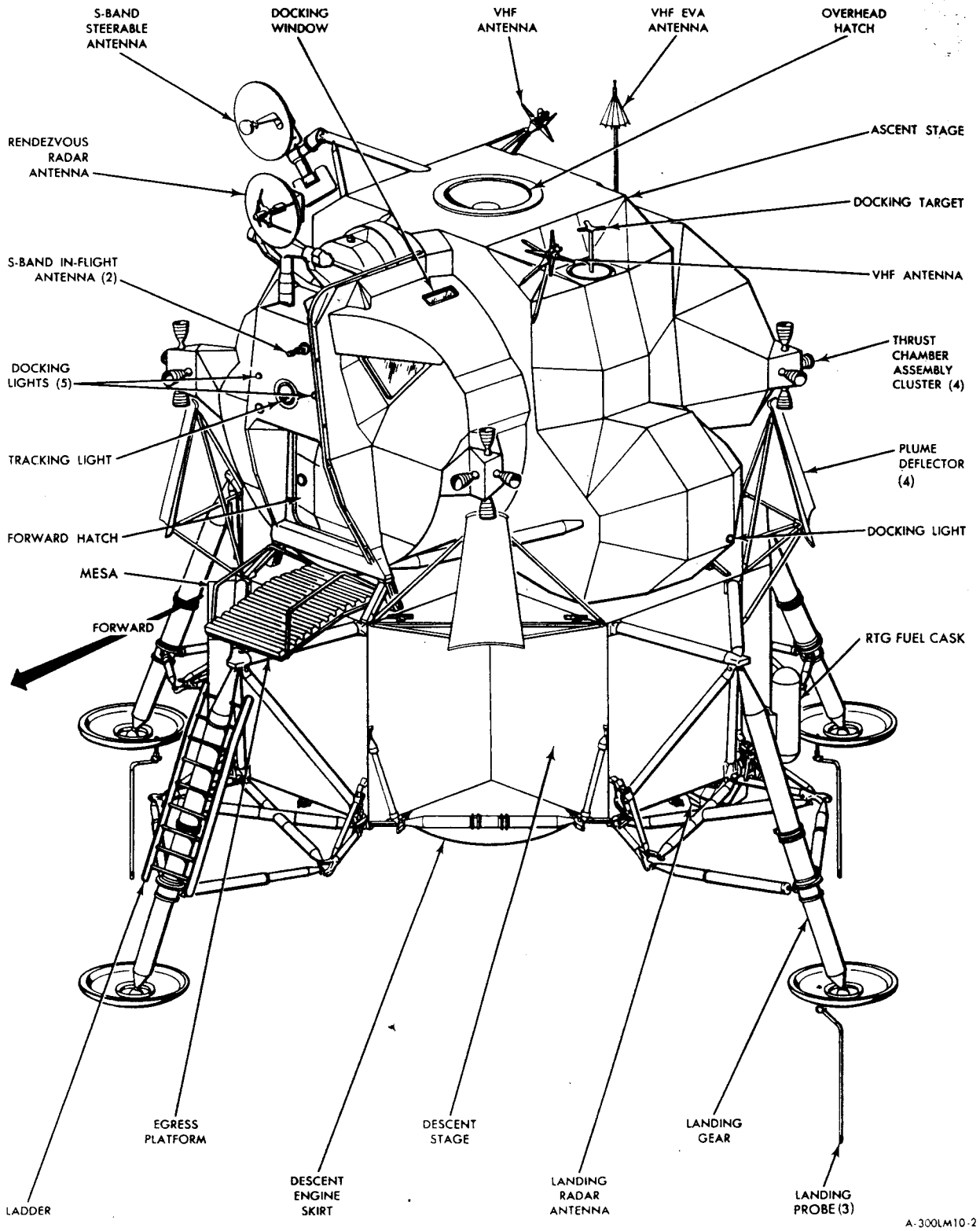

Figure 1-2. LM Configuration

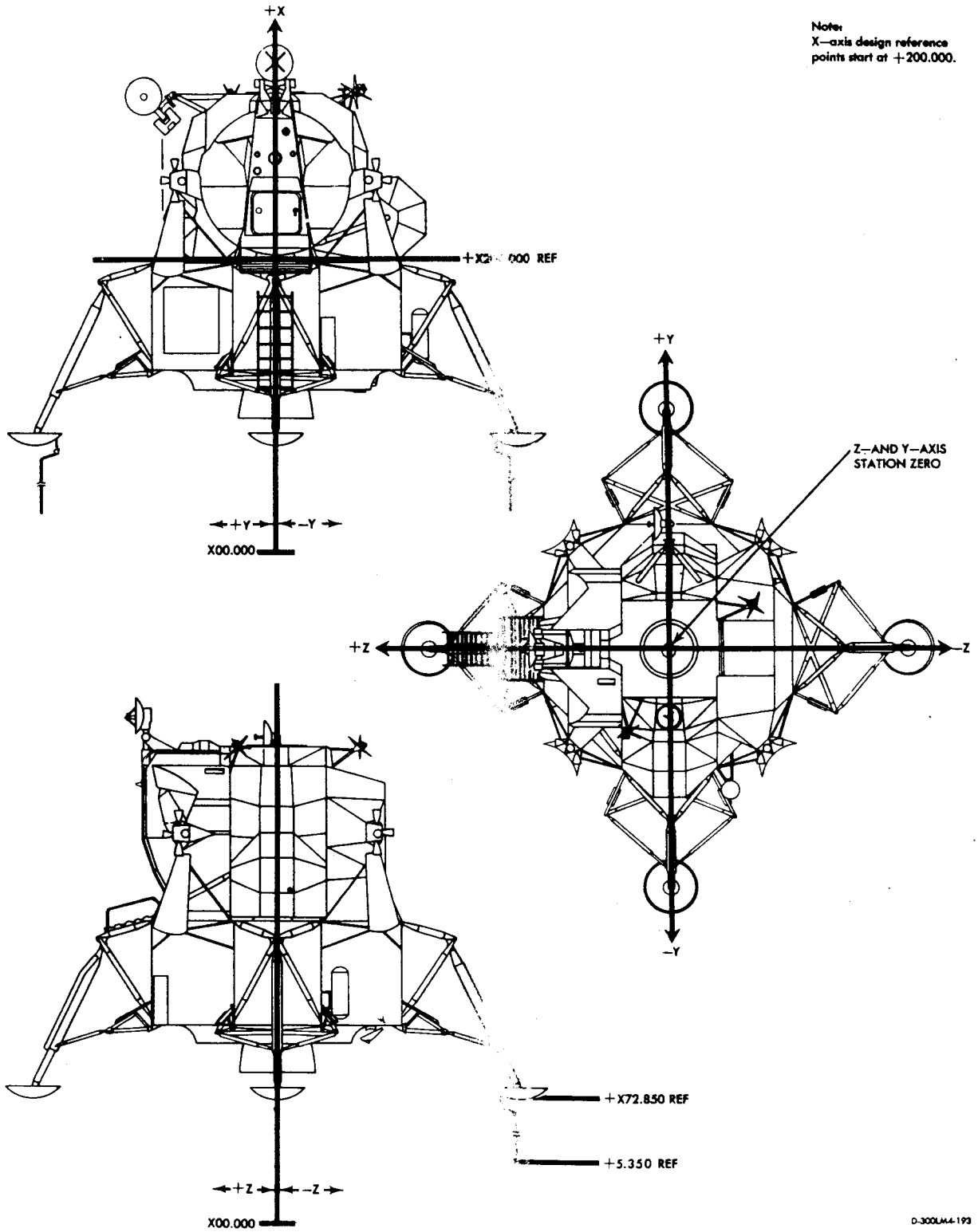

Figure 1-4. Station Reference Measurements

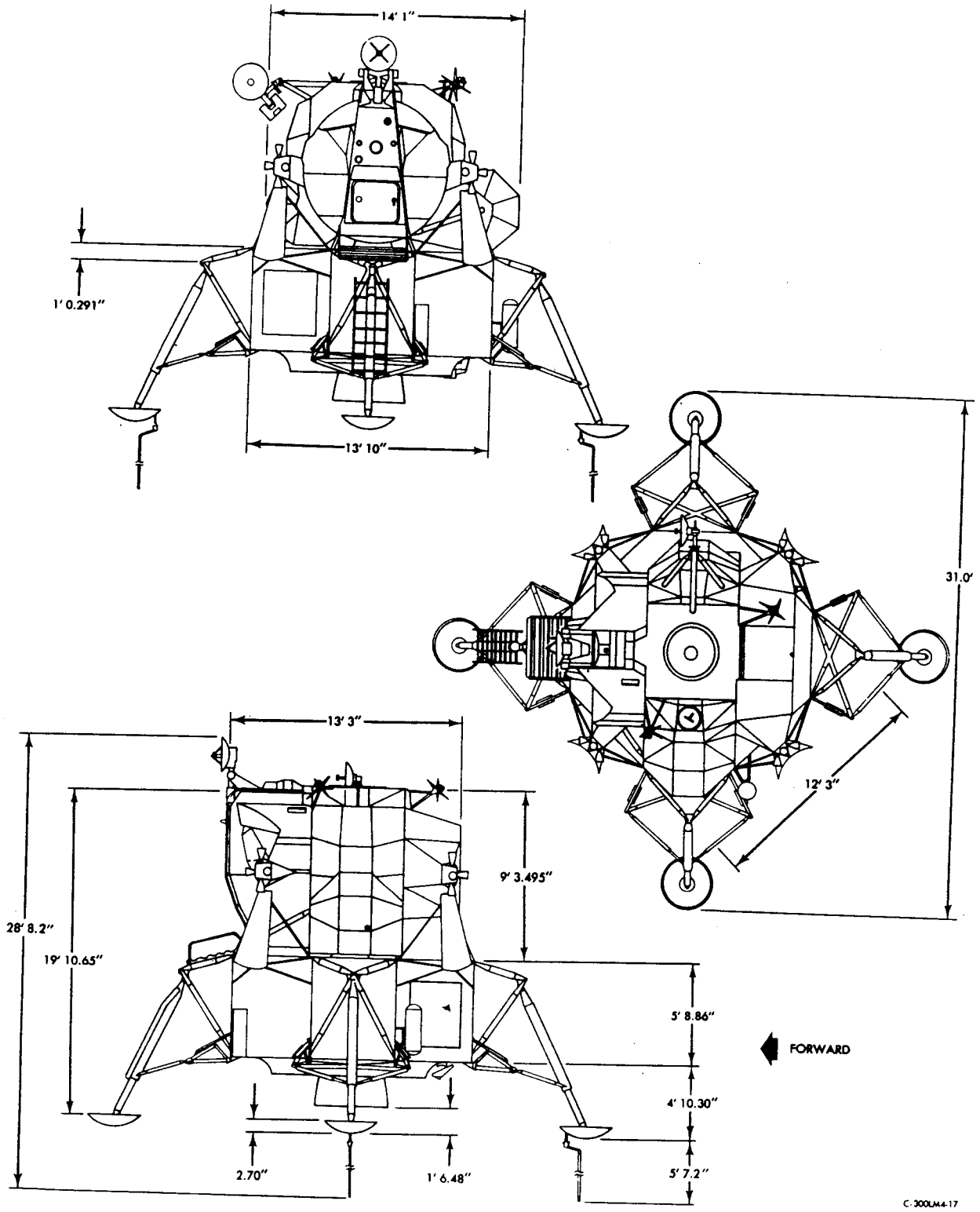

Figure 1-3. LM Overall Dimensions

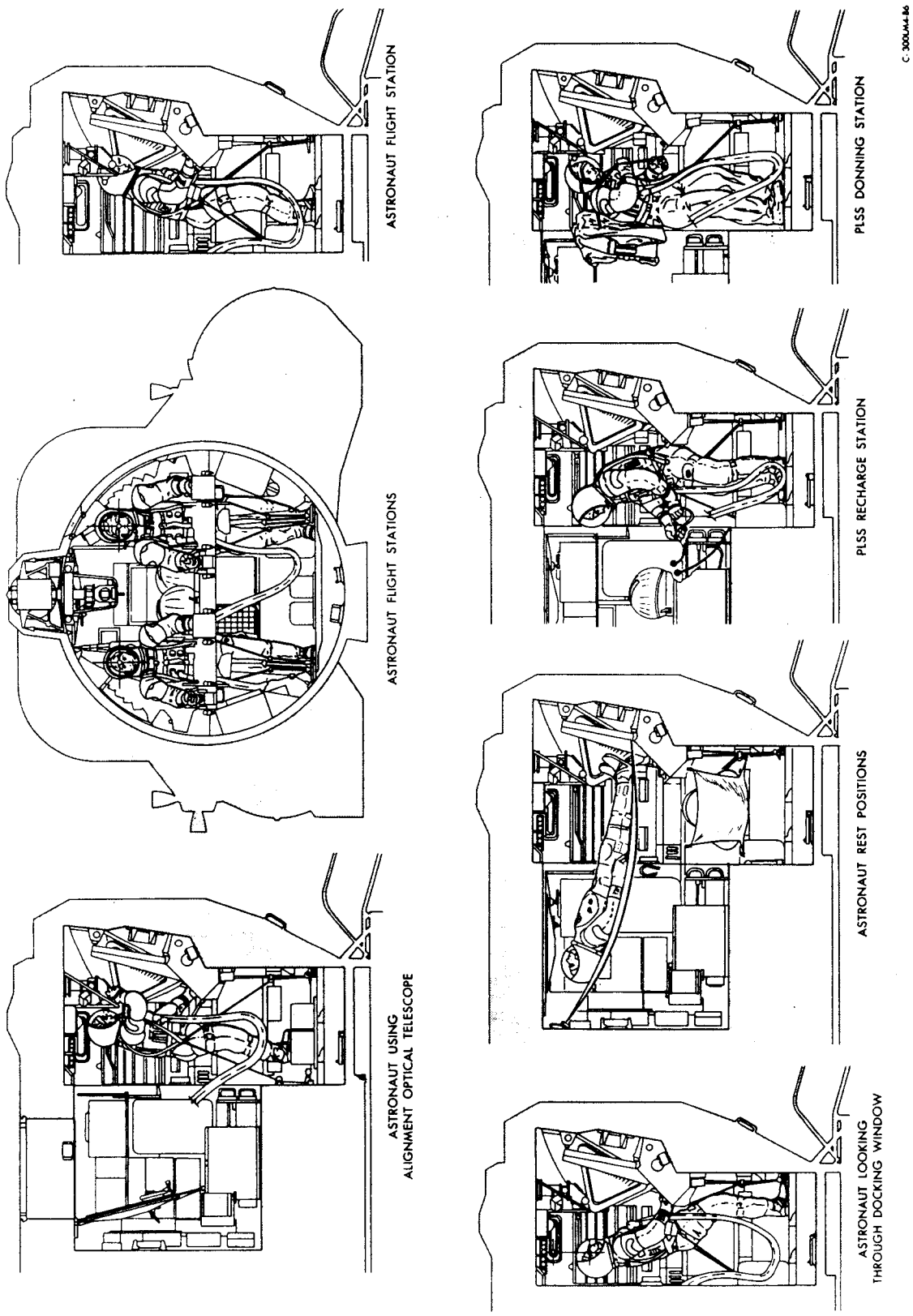

Figure 1-6. Flight Positions

1.2.2.1.1 Control and Display Panels. (See figure 1-7.)

The crew compartment has 12 control and display panels: two main display panels (1 and 2) that are canted forward 10°, two center panels (3 and 4) that slope down and aft 45° towards the horizontal, two bottom side panels (5 and 6), two lower side panels (8 and 12), one center side panel (14), two upper side panels (11 and 16), and the orbital rate display - earth and lunar (ORDEAL) panel aft to panel 8.

Panels 1 and 2 are located on each side of the front face assembly centerline, at eye level. Each panel is constructed of two 0.015-inch-thick aluminum-alloy face sheets, spaced 2 inches apart by formed channels. The spacer channels are located along the sheet edges; additional channels, inboard of the edge channels, reinforce the sheets. This forms a rigid box-like construction with a favorable strength-to-weight ratio and a relatively high natural frequency. Four shock mounts support each panel on the structure. Panel instruments are mounted to the back surface of the bottom and/or to the top sheet of the panel. The instruments protrude through the top sheet of the panel. All dial faces are nearly flush with the forward face of the panel. Panel 1 contains warning lights, flight indicators and controls, and propellant quantity indicators. Panel 2 contains caution lights, flight indicators and controls, and Reaction Control Subsystem (RCS) and Environmental Control Subsystem (ECS) indicators and controls.

Panel 3, immediately below panels 1 and 2, spans the width of these two panels. Panel 3 contains the radar antenna temperature indicators and engine, radar, spacecraft stability, event timer, RCS and lighting controls.

Panel 4 is centered between the flight stations and below panel 3. Panel 4 contains attitude controller assembly (ACA) and thrust translation controller assembly (TTCA) controls, inertial subsection indicators, and LM guidance computer (LGC) indicators and controls. Panels 1 through 4 are within easy reach and scan of both astronauts.

Panel 5 and 6 are in front of the flight stations at astronaut waist height. Panel 5 contains lighting and mission timer controls, engine start and stop pushbuttons, and the X-translation pushbutton. Panel 6 contains abort guidance controls.

Panel 8 is at the left of the Commander's station. The panel is canted up 15° from the horizontal; it contains controls and displays for explosive devices, audio controls, and heater controls.

Panel 11, directly above panel 8, has five angled surfaces that contain circuit breakers. Each row of circuit breakers is canted 15° to the line of sight so that the white band on the circuit breakers can be seen when they open.

Panel 12 is at the right of the LM Pilot's station. The panel is canted up 15° from the horizontal; it contains audio, communications, and communications antennas controls and displays.

Panel 14, directly above panel 12, is canted up 36.5° from the horizontal. It contains controls and displays for electrical power distribution and monitoring.

Panel 16, directly above panel 14, has four angled surfaces that contain circuit breakers. Each row of circuit breakers is canted 15° to the line of sight so that the white band on the circuit breakers can be seen when they open.

The ORDEAL panel is immediately aft of panel 8. It contains the controls for obtaining LM attitude, with respect to a local horizontal, from the LGC.

1.2.2.1.2 Forward Hatch. (See figure 1-8.)

The forward hatch is in the front face assembly, just below the lower display panels. The hatch is approximately 32 inches square; it is hinged to swing inboard on quick-release hinge pins when opened. A cam latch assembly holds the hatch in the closed position; the assembly forces a lip, around the outer circumference of the hatch, into a preloaded elastomeric silicone compound seal that is secured to the LM structure. Cabin pressurization forces the hatch lip further into the seal, ensuring a pressure-tight contact. A handle is provided on both sides of the hatch, for latch operation. To open the hatch, the cabin must be completely depressurized by opening the cabin relief and dump valve on the hatch. When the cabin is completely depressurized, the hatch can be opened by rotating the latch handle. A lockpin in a plate over the latch can be withdrawn to release the latch in an emergency. The cabin relief and dump valve can also be operated from outside the LM.

1.2.2.1 Crew Compartment. (See figures 1-5 and 1-6.)

The crew compartment is the frontal area of the ascent stage; it is 92 inches in diameter and 42 inches deep. This is the flight station area; it has control and display panels, armrests, body restraints, landing aids, two front windows, a docking window, and an alignment optical telescope (AOT). Flight station centerlines are 44 inches apart; each astronaut has a set of controllers and armrests. Circuit breaker, control, and display panels are along the upper sides of the compartment. Crew provision storage space is beneath these panels. The main control and display panels are canted and centered between the astronauts to permit sharing and easy scanning. An optical alignment station, between the flight stations, is used in conjunction with the AOT. A portable life support system (PLSS) donning station is also in the center aisle, slightly aft of the optical alignment station.

The crew compartment shell is cylindrical and of semimonocoque construction. It is a fusion-welded and mechanically fastened assembly of aluminum-alloy sheet and machined longerons. The shell has an opening for the docking window, above the Commander's flight station. The front face assembly of the crew compartment has two triangular windows and the forward hatch. Two large structural beams extend up the forward side of the front face assembly; they support the structural loads applied to the cabin structure. The lower ends of the beams support the two forward interstage mounts; the upper ends are secured to additional beam structure that extends across the top of the crew compartment shell and aft to the midsection structure. The crew compartment deck measures approximately 36 by 55 inches. It is constructed of aluminum honeycomb bonded to two sheets of aluminum alloy. Nonflammable Velcro pile strips, which contact hooked Velco material on the astronaut boots, are bonded to the deck surface. Handgrips, recessed in the deck, aid the astronauts during egress and ingress through the forward hatch. Perforated glass-reinforced plastic covers the ceiling above the flight stations. A handrail, with five green radio luminescent disks attached to it, is bolted to the left-hand structural beam of the front face assembly.

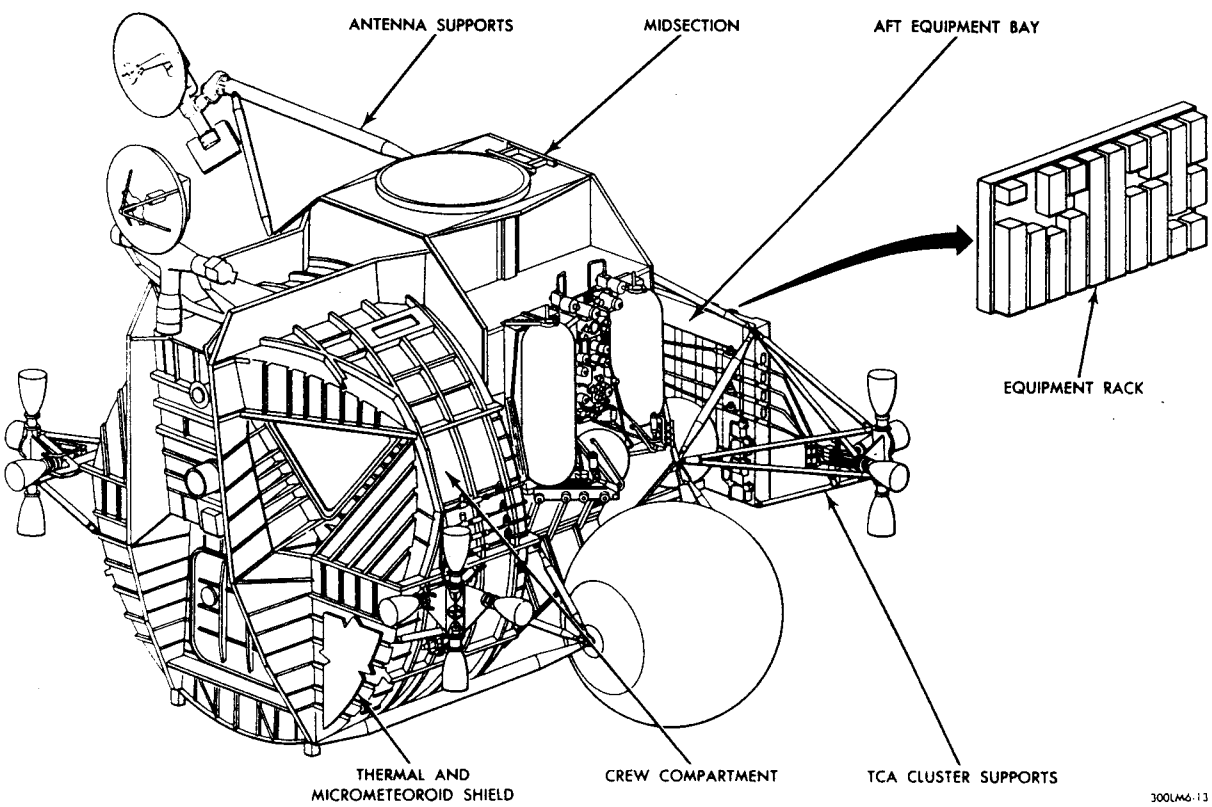

Figure 1-5. Ascent Stage Structure Configuration

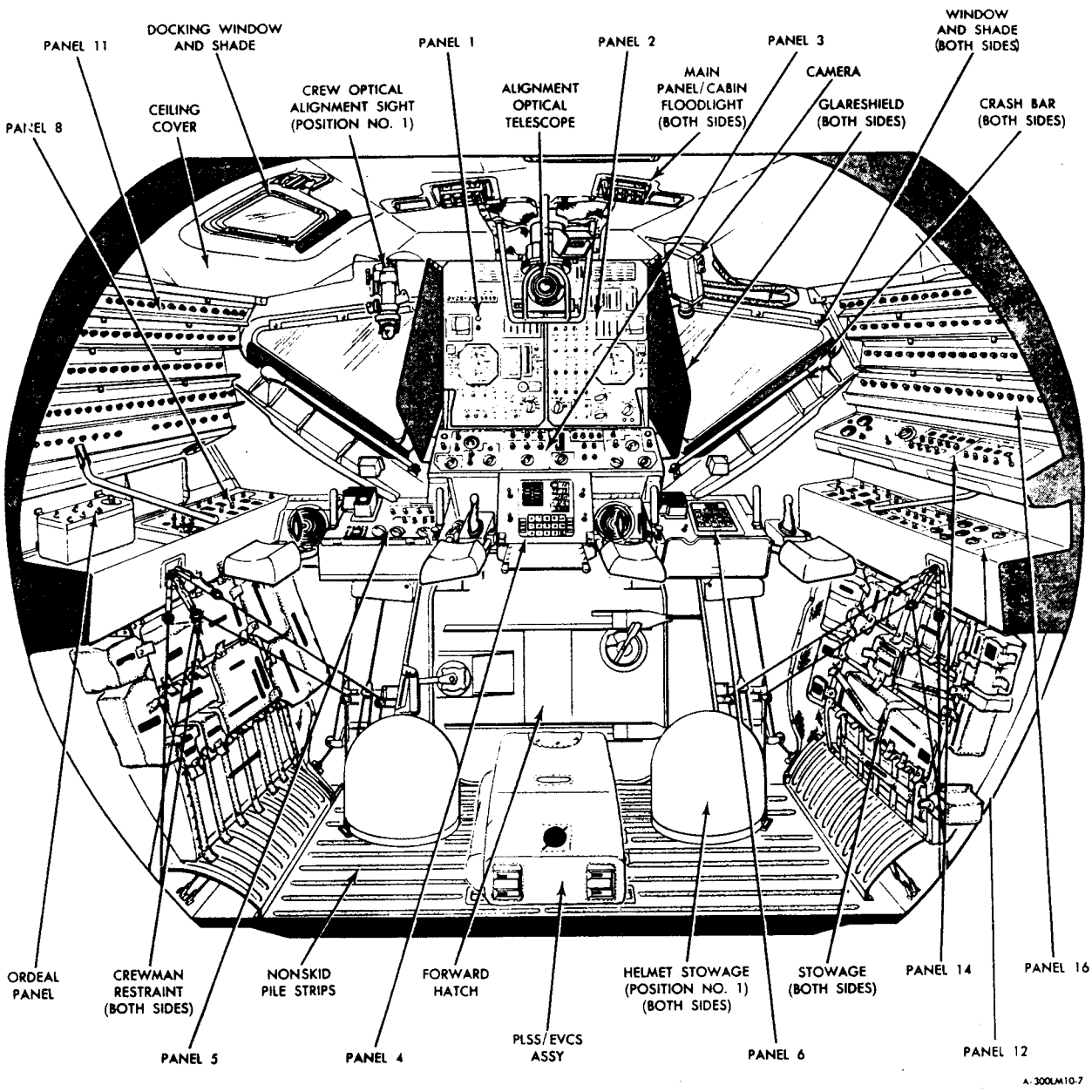

Figure 1-7. Cabin Interior (Looking Forward)

1.2.2.1.3 Windows. (See figures 1-9 and 1-10.)

Two triangular windows in the front face assembly provide visibility during descent, ascent, and rendezvous and docking phases of the mission. Both windows have approximately 2 square feet of viewing area; they are canted down to the side to permit adequate peripheral and downward visibility. A third (docking) window is in the curved overhead portion of the crew compartment shell, directly above the Commander's flight station. This window provides visibility for docking maneuvers. All three windows consist of two separated panes, vented to space environment. The outer pane is made of Vycor glass with a thermal (multilayer blue-red) coating on the outboard surface and an antireflective coating

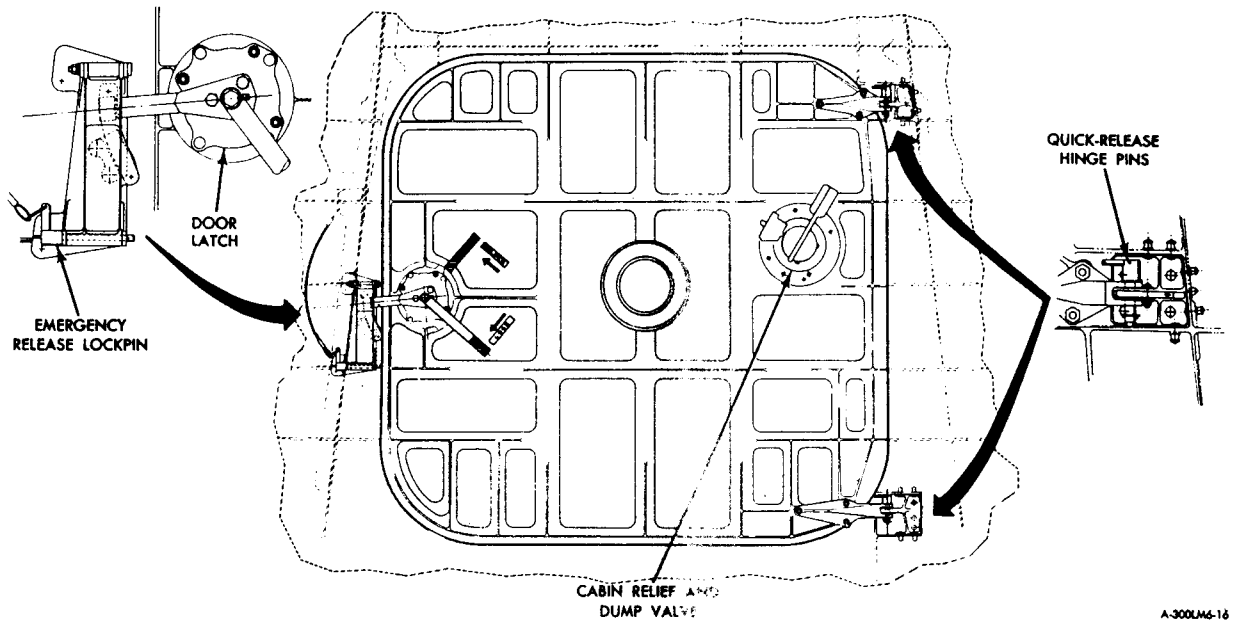

Figure 1-8. Forward Hatch

on the inboard surface. The inner pane is made of structural glass. It is sealed with a Raco seal (the docking window inner pane has a dual seal) and has a defog coating on the outboard surface and an anti-reflective coating on the inboard surface. Both panes are bolted to the window frame through retainers.

All three windows are electrically heated to prevent fogging. The heaters for the Commander's front window and the docking window receive their power from 115-volt a-c bus A and the Commander's 28-volt d-c bus, respectively. The heater for the LM Pilot's front window receives power from 115-volt a-c bus B. The heater power for the Commander's front window and the docking window is routed through the AC BUS A: CDR WIND HTR and HEATERS: DOCK WINDOW circuit breakers, respectively; for the LM Pilot's front window, through the AC BUS B: SE WIND HTR circuit breaker. These are 2-ampere circuit breakers, on panel 11. The temperature of the windows is not monitored with an indicator; proper heater operation directly affects crew visibility and is therefore visually determined by the astronauts. When condensation or frost appears on a window, that window heater is turned on. It is turned off when the abnormal condition disappears. When a window shade is closed, that window heater must be off.

1.2.2.2 Midsection. (See figures 1-5 and 1-11.)

The midsection structure is a ring-stiffened semimonocoque shell. The bulkheads consist of aluminum-alloy, chemically milled skin with fusion-welded longerons and machined stiffeners. The midsection shell is mechanically fastened to flanges on the major structural bulkheads at stations +Z27.00 and -Z27.00. The crew compartment shell is mechanically secured to an outboard flange of the +Z27.00 bulkhead. The upper and lower decks, at stations +X294.643 and +X233.500, respectively, are made of aluminum-alloy, integrally stiffened and machined. The lower deck provides structural support for the ascent stage engine. The upper deck provides structural support for the docking tunnel and the overhead hatch.

Two main beams running fore and aft, integral with those above the crew compartment, are secured to the upper deck of the midsection; they support the deck at the outboard end of the docking tunnel. The aft ends of the beams are fastened to the aft bulkhead (-Z27.000), which has provisions for bolting the tubular truss members that support both aft interstage fittings. Ascent stage stress loads applied to the front beam are transmitted through the two beams on the upper deck to the aft bulkhead, and, through the aft interstage support members, to the fittings. The combination of beams, bulkhead, and truss members forms a cradle around the cabin assembly; it takes up all the stress loads applied to the ascent stage. Two canted beam assemblies, secured to the bottom of the lower deck and to the forward and aft bulkheads, form the ascent stage engine compartment. The engine support ring truss members are bolted to the lower deck.

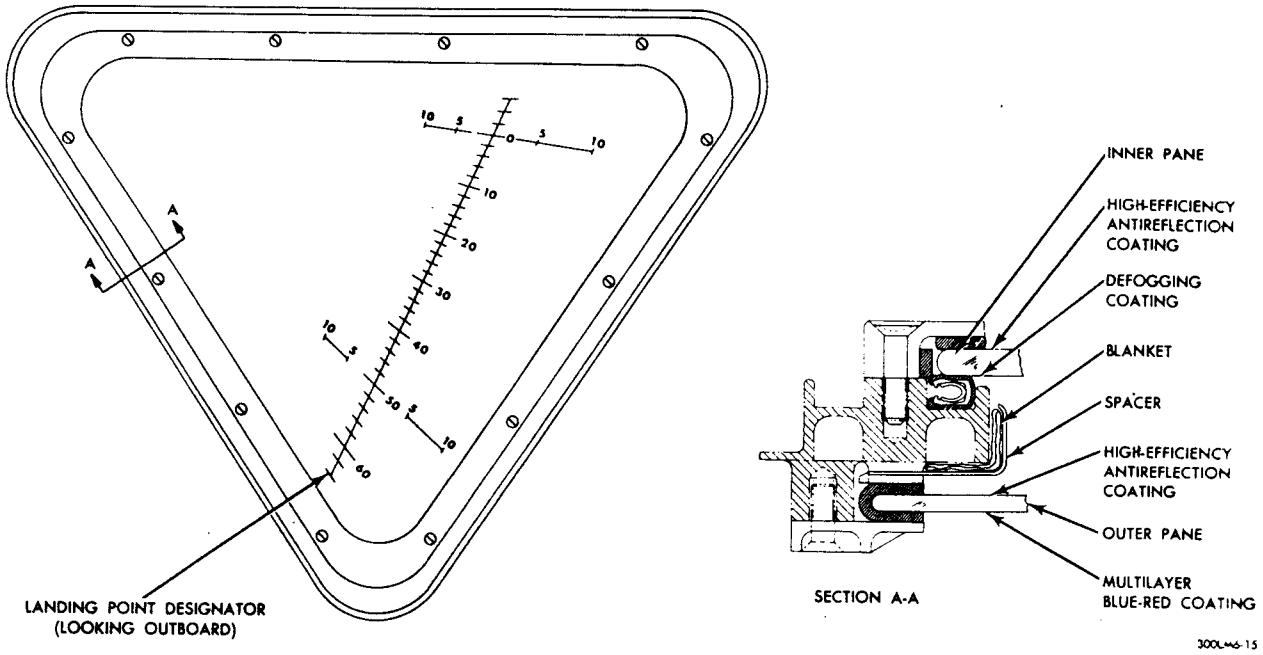

Figure 1-9. Front Window

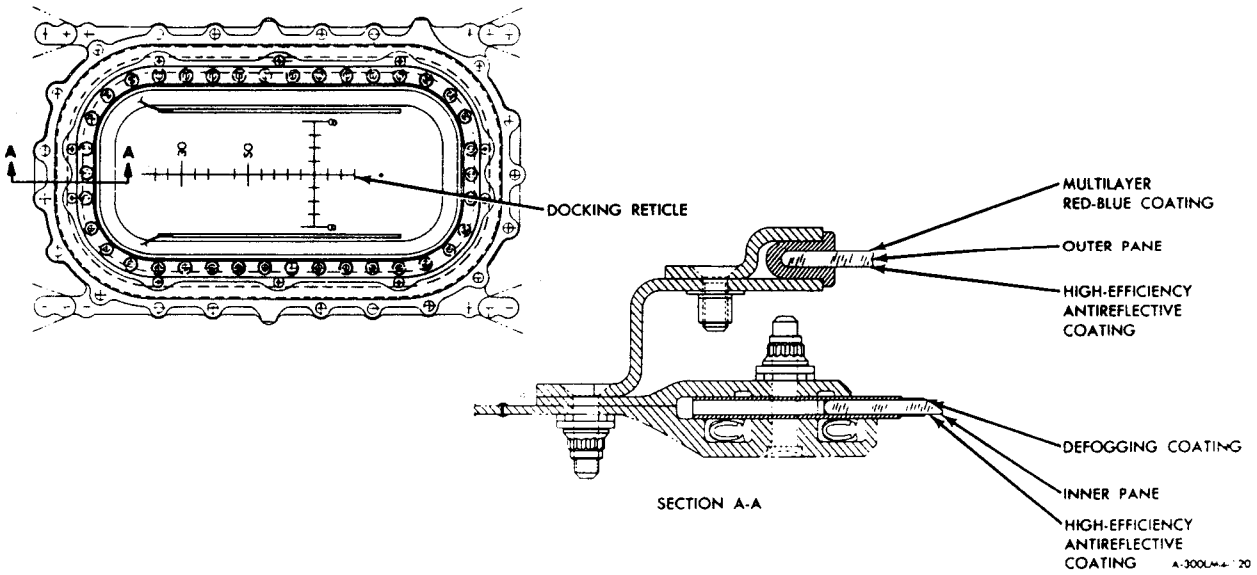

Figure 1-10. Docking Window

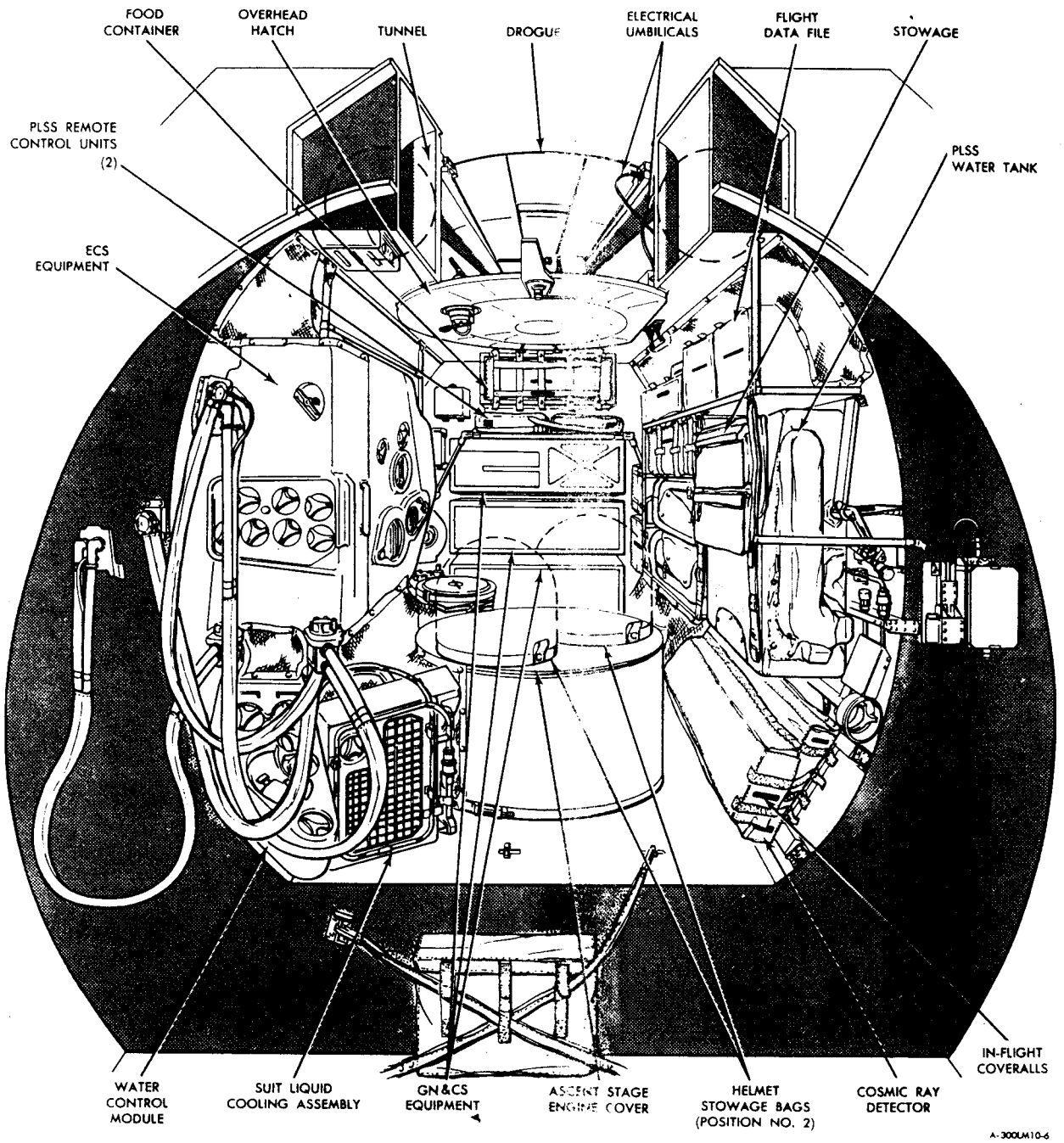

Figure 1-11. Cabin Interior (Looking Aft)

The right side of the midsection contains most of the ECS controls and most of the heat transport section water glycol plumbing. Valves for operation of the ECS equipment are readily accessible from the crew compartment. The left side of the midsection contains flight data file, a portable life support system (PLSS), and other crew provisions stowage. Guidance, Navigation and Control Subsystem (GN&CS) electronic units that do not require access by the astronauts are located on the midsection aft bulkhead. These units include a LM guidance computer, a coupling data unit, a

power and servo assembly, and a signal conditioner assembly. RCS propellant tanks are installed between the midsection bulkheads, on each side, external to the basic structure of the midsection. The ascent engine propellant tanks are mounted in the midsection, beneath the RCS tanks.

A ring at the top of the ascent stage is compatible with the clamping mechanisms in the CM. This ring is concentric with the X-axis, which is also the nominal centerline of thrust of the ascent and descent engines. The drogue portion of the docking mechanism is secured below this ring during the docking operation to mate with the CM-mounted probe. It is also stored in this area when storage is required out of the crew compartment.

1.2.2.2.1 Docking Tunnel (See figure 1-11.)

The docking tunnel, at the top centerline of the ascent stage, is 32 inches in diameter and 16 inches long. The lower end of the tunnel is welded to the upper deck structure; the upper end is secured to the main beams and the outer deck. The tunnel is used for transfer of astronauts and equipment to the LM from the CM and for transfer of the LM astronauts and equipment to the CM. This tunnel is compatible with its counterpart in the CM when in the docked configuration; it allows for astronaut transfer, without exposure to space, in a pressurized or unpressurized extravehicular mobility unit (EMU).

1.2.2.2.2 Overhead Hatch. (See figure 1-12.)

The overhead hatch is directly above the ascent engine cover, on the X-axis. Provisions for crew transfer through this hatch are based upon a head-first passage. Handgrips in the aft section of the docking tunnel aid in crew and equipment transfer. An off-center latch adjacent to the forward edge of the hatch, can be operated from either side of the hatch. The hatch is opened from within the cabin by rotating the handle approximately 90° counterclockwise; by turning the handle 90° clockwise, to open the hatch from outside the LM. A maximum torque of 35 inch-pounds is required to disengage the latching mechanism to open the hatch. The hatch is secured closed by rotating the handle in the opposite direction. The hatch has a preloaded elastomeric silicone compound seal mounted in the ascent stage structure. When the latch is closed, a lip near the outer circumference of the hatch enters the seal, ensuring a pressure-tight contact. Normal cabin pressurization forces the hatch lip into its seal. To open the hatch, the cabin must be depressurized through the cabin relief and dump valve; the latch is then unfastened.

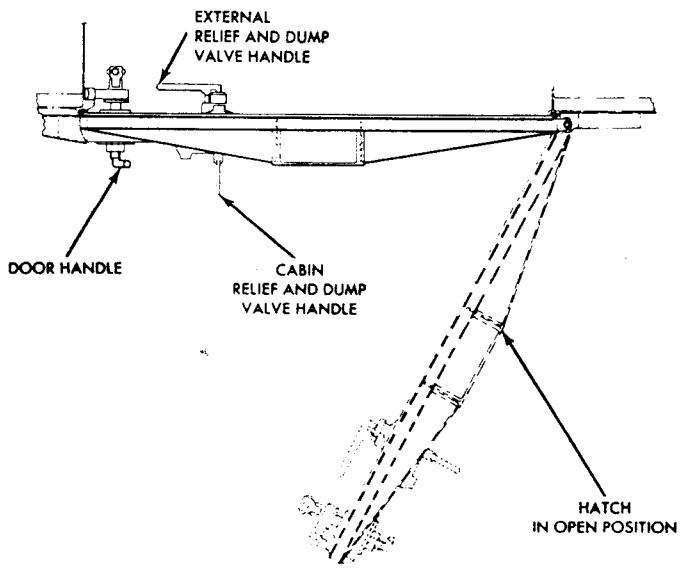

C-300LM4-117

Figure 1-12. Overhead Hatch

1.2.2.3 Aft Equipment Bay. (See figure 1-5.)

The aft equipment bay, aft of the -Z27.000 bulkhead, is unpressurized. The main supporting structure of the bay consists of tubular truss members bolted to the aft side of the -Z27.000 bulkhead. The truss members, used in a cantilever type of construction, extend aft to the equipment rack. The equipment rack assembly is constructed of a series of vertical box beams, supported by an upper and lower Z-frame. The beams have integral cold rails that transfer heat from the electronic equipment mounted on the equipment racks. The cold rails are mounted vertically in the structural frame, which is supported at its upper and lower edges by the truss members. A water-glycol solution (coolant) flows through the cold rails.

Two oxygen tanks and two gaseous helium tanks are secured with supports and brackets to the truss members, the -Z27.000 bulkhead, and the equipment rack. Support mountings and brackets are secured to the aft side of the -Z27.000 bulkhead, for valves, plumbing, wiring, ECS components, and propellant tanks that do not require a pressurized environment.

1.2.2.4 Thrust Chamber Assembly Cluster Supports. (See figure 1-5.)

Aluminum-alloy tubular truss members for external mounting of two forward thrust chamber assembly (TCA) clusters are bolted to both sides of the front face assembly and to the crew compartment shell. Aluminum-alloy tubular truss members for external mounting of two aft TCA clusters are bolted to the upper and lower corners of the equipment rack assembly and to the -Z27.000 bulkhead.

1.2.2.5 Antenna Supports. (See figure 1-5.)

The ascent stage provides mounting accommodations for an S-band steerable antenna, two VHF antennas, two S-band in-flight antennas, and a rendezvous radar antenna. The S-band steerable antenna has tubular truss members; the main truss is mounted on top of the right side of the midsection. One VHF antenna is mounted on the top left side of the stage, forward of the +Z27.00 bulkhead; the other one is mounted on the top right side, aft of the -Z27.00 bulkhead. One S-band in-flight antenna is mounted on the front face assembly; the other one, on the aft equipment bay rack. The rendezvous radar antenna is mounted on the upper beams of the crew compartment.

1.2.2.6 Thermal and Micrometeoroid Shield. (See figure 1-5.)

The entire ascent stage structure is enveloped with a thermal and micrometeoroid shield, which combines either a blanket of multiple layers of aluminized polyimide sheet (Kapton H-film) and aluminized polyester sheet (mylar) with a sandwich of inconel skin, inconel mesh and nickel foil or a polyimide blanket with a single sheet of aluminum skin. The blanket panels, formed in various shapes and sizes, consist (outboard to inboard) of 15 layers of 0.0005-inch-thick H-film, 10 layers of 0.00015-inch-thick mylar, and a single layer of 0.0005-inch-thick H-film. In a few ascent stage areas that have different thermal-protection requirements, the number of layers in a blanket panel varies slightly. Outboard to inboard, the sandwich comprises a 0.0015-inch-thick inconel skin and one or more layers of inconel mesh alternated with 0.0005-inch-thick nickel foil. The number of inconel mesh and nickel foil layers in a sandwich and the thickness of the aluminum skin vary considerably at different areas of the vehicle, depending on the duration and intensity of RCS thruster plume impingement at those areas. The combined thermal and micrometeoroid shield is mounted on low-thermal-conductive supports (standoffs), which keep it at least 2 inches from the main structure. Where subsystem components are mounted external to the ascent stage basic structure, the standoffs are mounted to aluminum frames that surround the components. The aluminum or inconel skin (the outermost material) serves as a micrometeoroid bumper; the sandwich and blanket material serve as thermal shielding. Where the blankets meet, the mating edges are sealed with mylar tape. Vent holes are provided in the blanket.

The aluminized mylar blankets insulate the structure against temperatures up to +350° F. On the TCA support truss members, which are subjected to temperatures in excess of +350° F due to engine radiation, an additional 20 layers of H-film are installed. H-film has an insulating capability up to +1,000° F. Additional H-film blankets are also used in other areas of the ascent stage that will be subjected to temperatures in excess of +350° F. During earth prelaunch activities, various components and areas of the ascent stage must be readily accessible. Access panels in the outer skin and insulation provide this accessibility.

1.3 DESCENT STAGE.

1.3.1 GENERAL DESCRIPTION.

The descent stage is the unmanned portion of the LM. The descent stage structure provides attachment and support points for securing the LM within the spacecraft Lunar-Module adapter (SLA).

1.3.2 STRUCTURE. (See figure 1-13.)

The descent stage is constructed of aluminum-alloy, chemically milled webs. It consists of two pairs of parallel beams arranged in a cruciform, with a deck on the upper and lower surfaces. The beam webs are at stations +Y27.000, -Y27.000, +Z27.000, and -Z27.000. The lower deck is at station +X131.140; the upper deck, at station +X196.000. The ends of the beams are closed off by end closure bulkheads at stations +Z81.000, -Z81.000, +Y81.000, and -Y81.000. Joints are fastened with standard mechanical fasteners. A four-legged truss (outrigger) at the ends of each pair of beams serves as a support for the LM in the SLA and as the attachment point for the main strut of the landing gear. The outriggers are constructed of tubular aluminum alloy. Fittings on the +Y27.000 and -Y27.000 beams, at station +Z65.906, serve as the forward attachment points for the ascent stage. Fittings on the -Z27.000 beam, at stations +Y65.000 and -Y65.000, serve as the aft attachment points for the ascent stage.

Compartments formed by the descent stage structural arrangement house equipment required by LM subsystems. The center compartment houses the descent stage engine, which is supported by eight tubular truss members secured to the four corners of the compartment and by the engine gimbal ring. Descent engine oxidizer tanks are housed in the fore and the aft compartments between the +Y27.000 and -Y27.000 beams; descent engine fuel tanks, between the +Z27.000 and -Z27.000 beams in the side compartments.

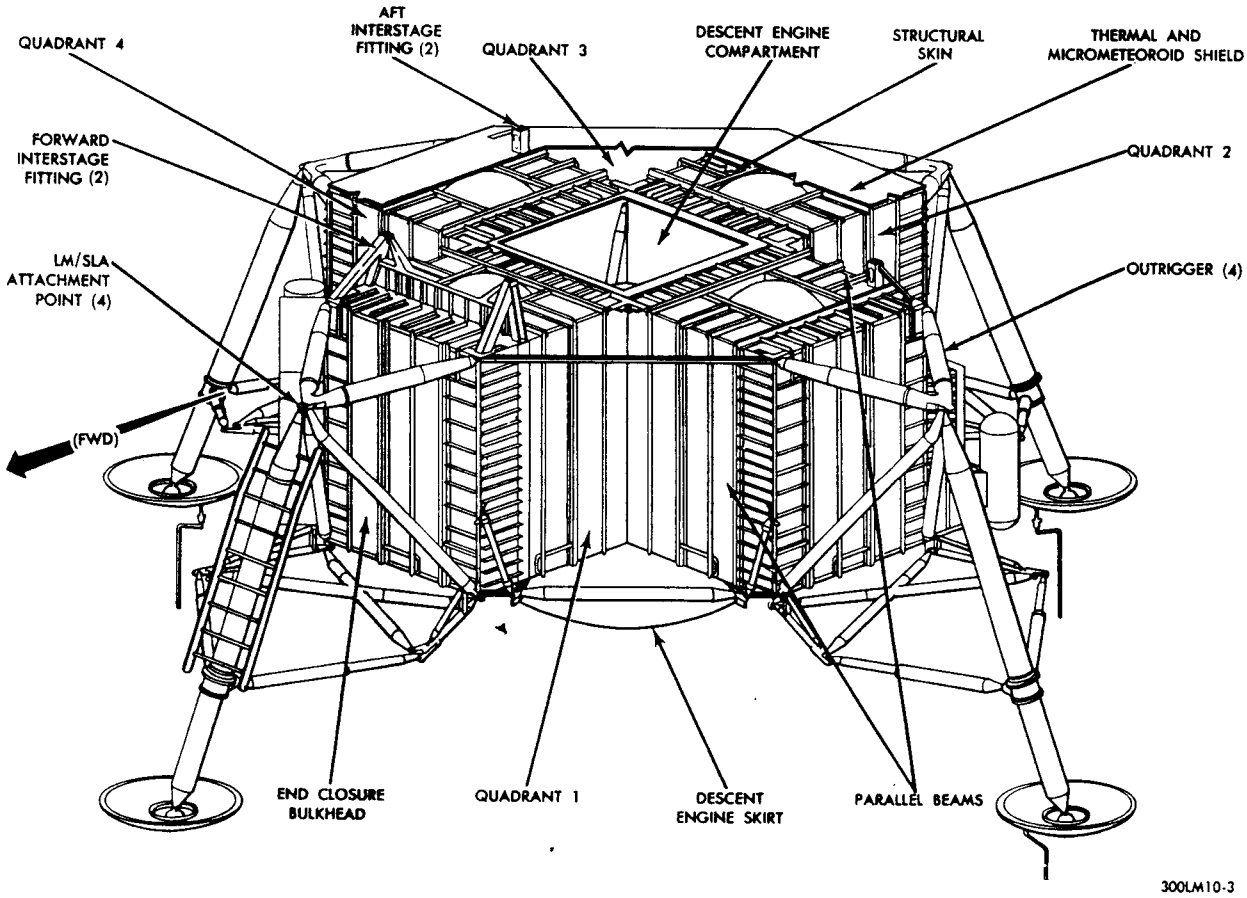

Figure 1-13. Descent Stage Structure Configuration

The areas, between the main beams, that giv descent stage its octagon shape are referred to as quadrants. Quadrant 1 is formed by the inte ion of the +Z27.000 and -Y27.000 beams, quadrant 2 by the -Z27.000 and -Y27.000 beams, quadrant the -Z27.000 and +Y27.000 beams, and quadrant 4 by the +Z27.000 and +Y27.000 beams.

Quadrant 1 has mounting provisions for a Lu oving Vehicle (LRV) or a Mobile Equipment Transport System (METS) and also has a high-pressur eous oxygen disconnect.

Quadrant 2 houses an ECS water tank and Ap unar surface experiment packages (ALSEP). A cosmic ray experiment package is mounted adj to the ALSEP. A fuel cask for use with the ALSEP is mounted adjacent to the ALSEP, but outside t adrant thermal blanket and micrometeoroid shield. A landing radar antenna is supported ext lly on additional structure below the lower deck. Components for the landing radar are mounted e -Y27.000 beam.

Quadrant 3 houses supercritical helium and nt helium tanks, the descent engine control assembly of the GN&CS, an ECS gaseous oxygen tan nd interstage hardline disconnects.

Quadrant 4 houses EDS components (umbilic le cutter, pyro relay battery, and pyro relay box), an ECS water tank and gaseous oxygen tank waste management container, and the propellant quantity gaging system (PQGS). A modified MES mounted externally to quadrant 4.

Five EPS batteries, two ECA's, and a batter trol relay assembly are mounted on the -Z bulkhead.

Fill and drain ports and vents for the fuel, o er, helium, water, and gaseous oxygen tanks are external to the descent stage outer skin. The des stage includes a thermal and micrometeoroid shield, the landing gear, and an egress platform ur plume deflectors, to divert the plume of the RCS downward-firing thrusters from the descent sta e truss mounted to the descent stage. Two deflectors are shorted to provide clearance for the LR adrant 1) and the MESA (quadrant 4), respectively. The supporting trusses for these deflectors been modified.

1.3.2.1 Thermal and Micrometeoroid Shield.

The entire descent stage structure is envelo ith a thermal and micrometeoroid shield, which combines multiple layers of aluminized mylar and H- with an outer skin of 0.002-inch H-film. In areas where micrometeoroid protection is required, one r of black-painted 0.00125-inch inconel is used as skin. The shield is mounted on low-thermal-condu supports, which keep it at least one-half inch away from the main structure. A titanium blast shield ured to the upper side of the descent engine compartment, above the thermal shield, deflects the ent engine exhaust out of, and away from the descent engine compartment.

The bottom of the descent stage, and the eng ompartment, are subjected to very high temperatures due to radiation from the descent engine. A heat shield, composed of titanium with a blanket of alternate layers of nickel foil and Fiberfax outsi nd a blanket of H-film inside, protects the bottom of the descent stage from engine heat. A titaniu ield with a thermal blanket of multiple layers of nickel foil and Fiberfax under an outer blanket of m protects the engine compartment. A flange-like ring of columbium backed with a fibrous insulat s attached directly to the engine nozzle extension and joined to the base heat shield by an annular b s of 25-layer H-film. This bellows arrangement permits engine gimbaling, but prevents engine from leaking into the engine compartment.

1.3.2.2 Landing Gear. (See figure 1-14.)

The landing gear provides the impact attenu required to land the LM on the lunar surface, prevents tipover, and supports the LM during lun y and lunar launch. Landing impact is attenuated to load levels that preserve the structural integr the LM. At launch, the landing gear is stowed in a retracted position; it remains retracted until th mmander operates the LDG GEAR DEPLOY switch on panel 8. The landing gear uplocks are explosively released and springs in the deployment mechanism extend the landing gear. Once exte each landing gear assembly is locked in place by two downlock mechanisms.

The landing gear is of the cantilever type; it ists of four leg assemblies connected to outriggers that extend from the ends of the descent stage s ral beams. The legs extend from the front, rear and both sides of the LM. Each leg assembly c s of a primary strut, a footpad, two secondary struts, an uplock assembly, two deployment and lock mechanism, and a truss assembly. The left, right and aft footpad each have a lunar-surface s probe. A ladder is affixed to the forward leg assembly.

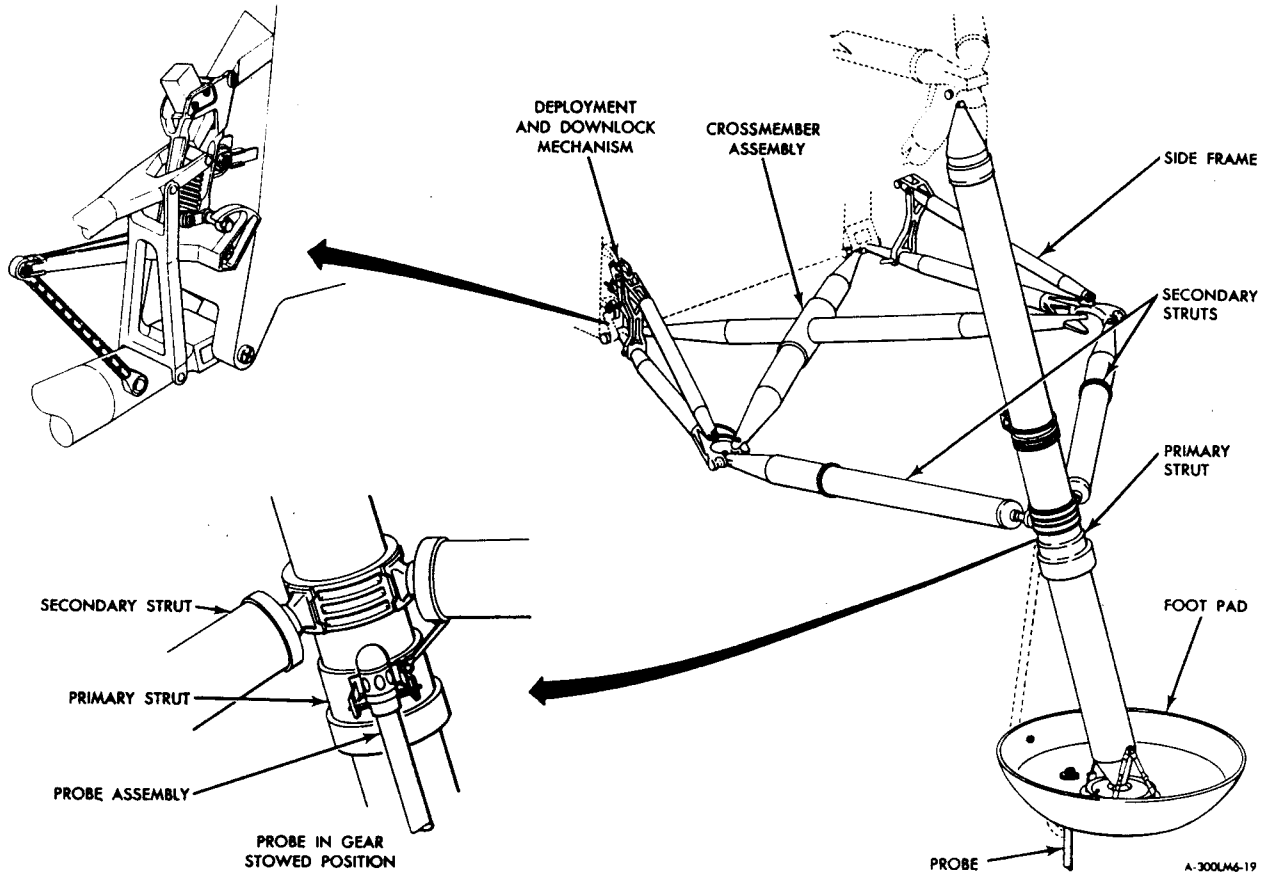

Figure 1-14. Landing Gear

1.3.2.2.1 Primary Strut.

The upper end of the primary strut attaches to the descent stage outrigger fitting; the lower end has a ball joint support for the footpad. Crushable aluminum honeycomb inside the primary strut is used as the shock-absorbing medium. The primary strut absorbs compression loads only.

1.3.2.2.2 Footpad.

The footpad assures minimal penetration of the lunar surface. It has a diameter of 37 inches and can pivot at the end of the primary strut. A lunar-surface sensing probe is attached to each footpad except the forward one.

1.3.2.2.3 Secondary Struts.

The outboard end of each secondary strut attaches to the primary strut; the inboard end, to the deployment truss. The secondary struts contain crushable aluminum honeycomb for shock attentuation. These struts absorb compression and tension loads.

1.3.2.2.4 Uplock Assembly.

The uplock assembly for each landing gear assembly comprises a fixed link and an explosive cutter device containing two end detonator cartridges. The fixed link, attached between the descent stage structure and the primary strut, restrains the landing gear in its retracted (stowed) position. The cutter

device is pinned to the fixed link. Setting the LDG GEAR DEPLOY switch to FIRE activates the electrical circuit that fires the high-explosive charge in the end detonator cartridges. The resulting detonations impel cutter blades that sever the fixed link, permitting the deployment mechanism to fully extend the landing gear. Either cartridge supplies sufficient energy to sever the fixed links.

1.3.2.2.5 Deployment and Downlock Mechanism.

Each deployment and downlock mechanism (two for each landing gear assembly) consists of two spring-loaded devices and connecting linkage, which deploy and then lock the landing gear.

The deployment portion of the mechanism consists of a spring and linkage (a link and a cam idler crank). The linkage is attached between descent stage structure and the landing gear deployment truss. One end of the spring is attached to the linkage; the other end is coiled around a roller attached to descent stage structure. After the uplock assembly fixed link is severed, the spring coils up, pulling on the linkage and indirectly on the deployment truss to fully deploy the landing gear.

The downlock portion of each deployment and downlock mechanism consists of a spring-loaded latch (with an integral cam follower) attached to descent stage structure, a latch roller on the deployment truss, and two independent electrical switches in a single case. When the landing gear is retracted, the latch is held open because the cam follower rests on the cam of the cam idler crank. As the landing gear deploys, the cam rotates and, at full deployment, the cam follower drops off the cam ramp, allowing the spring to snap the latch over the latch roller. This secures the roller against a stop on the structure. Simultaneously with the latching motion, the electrical switches are actuated to change the LDG GEAR DEPLOY talkback from a striped to a gray indication. The indication, reflecting the deployed and locked gear condition occurs if at least one of the two switches in each downlock device has actuated. An external visual indication that the landing gear is deployed and locked is also provided. A red luminescent stripe is painted on the lock latch and on the deployment truss. These stripes become aligned when the landing gear assemblies are down and locked. The stripes can be seen, day or night, from as far away as 100 feet; they serve as an indication that can be checked from the CM.

1.3.2.2.6 Lunar-Surface Sensing Probe.

The lunar-surface sensing probe attached to the left, right, and aft landing gear footpads is an electromechanical device. The probes are retained in the stowed position against the primary strut until landing gear deployment. During deployment, mechanical interlocks are released, permitting spring energy to extend the probes below the footpad. At lunar contact (just before landing gear impact), two mechanically actuated switches in each probe energize the LUNAR CONTACT lights to advise the crew to shut off the descent engine. Each probe has two indicator plates, which, when aligned, indicate that the probe is fully extended.

1.3.2.2.7 Ladder.

The ladder affixed to the primary strut of the forward leg assembly has rungs and railings. It extends from the forward end of the platform to the end of the strut's outer cylinder. The ladder is used to climb to and from the hatch during extravehicular activity on the lunar surface.

1.3.2.3 Platform.

The external platform, on the LM centerline immediately below the forward hatch, provides the astronauts with work space for handling equipment, and aids ingress to and egress from the LM. The platform is approximately 3 feet square; it is attached to the descent stage structure.

1.4 LM - SLA - S-IVB CONNECTIONS.

At earth launch, the LM is within the SLA, which is connected to the S-IVB booster. The SLA has an upper section and a lower section. The outriggers, to which the landing gear is attached, provide attachment points for securing the LM to the SLA lower section. The LM is mounted to the SLA support structure on adjustable spherical seats at the apex of each of the four outriggers; it is held in place by a tension holddown strap at each mounting point. Before the LM is removed, the upper section

of the SLA is explosively separated into four segments. These segments, which are hinged to the lower section, fold back and are then forced away from the SLA by spring thrusters. The LM is then explosively released from the lower section.

1.5 LM-CSM INTERFACES.

A ring at the top of the ascent stage provides a structural interface for joining the LM to the CM. The ring, which is compatible with the clamping mechanisms in the CM, provides structural continuity. The drogue portion of the docking mechanism is secured below this ring. The drogue is required during docking operations to mate with the CM-mounted probe. See figure 1-15 for orientation of the LM to the CSM.

1.5.1 CREW TRANSFER TUNNEL.

The crew transfer tunnel (LM-CM interlock area) is the passageway created between the LM overhead hatch and the CM forward pressure hatch when the LM and the CSM are docked. The tunnel permits intervehicular transfer of crew and equipment without exposure to space environment. The tunnel and the LM are pressurized from the CM.

1.5.1.1 Final Docking Latches.

Twelve latches are spaced equally about the periphery of the CM docking ring. They are placed around and within the CM tunnel so that they do not interfere with probe operation. When secured, the latches ensure structural continuity and pressurization between the LM and the CM, and seal the tunnel interface.

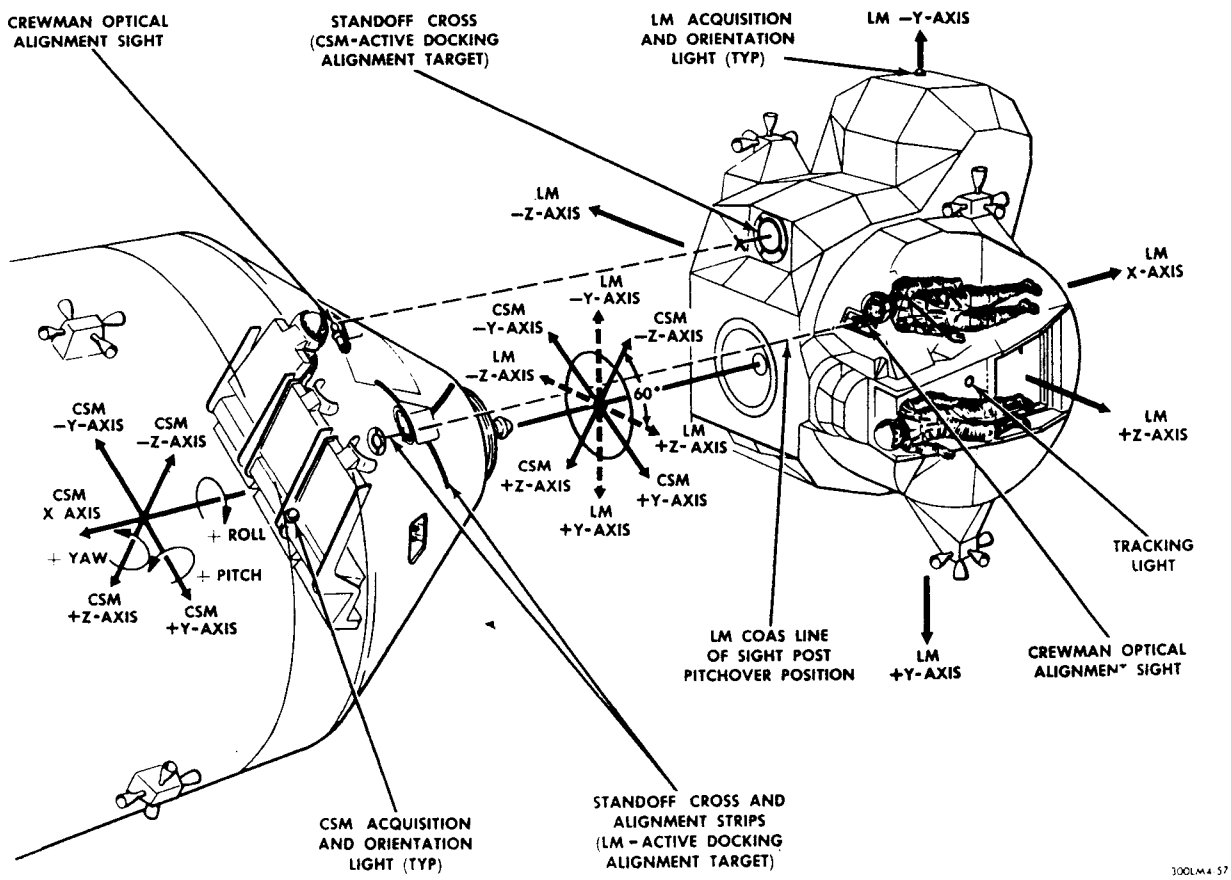

Figure 1-15. LM-CSM Reference Axes

1.5.1.2 Umbilical.

An electrical umbilical, in the LM portion of the tunnel, is connected by an astronaut to the CM. This connection can be made without drogue removal.

1.5.1.3 Docking Hatches.

The LM has a single docking (overhead) hatch; the CM has a single, integral, forward hatch. The LM overhead hatch is not removable. It is hinged to open 75° into the cabin.

1.5.1.4 Docking Drogue.

The drogue assembly is a conical structure with provisions for mounting in the LM portion of the crew transfer tunnel. The drogue may be removed from either end of the crew transfer tunnel and may be temporarily stowed in the CM or the LM, during Service Propulsion System (SPS) burns. One of the three tunnel mounts contains a locking mechanism to secure the installed drogue in the tunnel.

1.5.1.5 Docking Probe.

The docking probe provides initial CM-LM coupling and attenuates impact energy imposed by vehicle contact. The docking probe assembly consists of a central body, probe head, capture latches, pitch arms, tension linkages, shock attenuators, a support structure, probe stowage mechanism, probe extension mechanism, probe retraction system, an extension latch, a preload torque shaft, probe electrical umbilicals, and electrical circuitry. The assembly may be folded for removal and stowage from either end of the transfer tunnel.

The probe head is self-centering. When it centers in the drogue the three capture latches automatically engage the drogue socket. The capture latches can be released by a release handle on the CM side of the probe or by depressing a probe head release button from the LM side, using a special tool stowed on the right side stowage area inside the cabin.

1.5.1.6 Docking Aids.

Visual alignment aids are used for final alignment of the LM and CSM, before the probe head of the CM makes contact with the drogue. The LM +Z-axis will align 50° to 70° from the CSM -Z-axis and 30° from the CSM +Y-axis. The CSM position represents a 180° pitchover and a counterclockwise roll of 60° from the launch vehicle alignment configuration.

An alignment target is recessed into the LM so as not to protrude into the launch configuration clearance envelope or beyond the LM envelope. The target, at approximately stations -Y46.300 and -Z0.203, has a radioluminescent black standoff cross having green radioluminescent disks on it and a circular target base painted fluorescent white with black orientation indicators. The base is 17.68 inches in diameter. Crossmembers on the standoff cross will be aligned with the orientation indicators and centered within the target circle when viewed at the intercept parallel to the X-axis and perpendicular to the Y-axis and Z-axis.

1.6 STOWAGE PROVISIONS.

The LM has provisions for stowing crew personal equipment. The equipment includes such items as the docking drogue; navigational star charts and an orbital map, umbilicals, a crewman's medical kit; a lunar extravehicular visor assembly (LEVA) for each astronaut, a special multipurpose wrench (tool B); spare batteries for the PLSS packs, and other items. For a detailed list of crew personal equipment, refer to paragraph 2.11.

GUIDANCE, NAVIGATION AND CONTROL SUBSYSTEM

RADAR SUBSYSTEM

MAIN PROPULSION SUBSYSTEM

REACTION CONTROL SUBSYSTEM

ELECTRICAL POWER SUBSYSTEM

ENVIRONMENTAL CONTROL SUBSYSTEM

COMMUNICATIONS SUBSYSTEM

EXPLOSIVE DEVICES SUBSYSTEM

INSTRUMENTATION SUBSYSTEM

LIGHTING

CREW PERSONAL EQUIPMENT

Table 2.1-1. Control Electronics Section - Summary of Modes of Attitude Control (cont)

Mode	Switches and Positions	Guidance Signals	Manual Attitude Control	Manual Translation Control	Attitude Damping	Engine Gimbal Control	Remarks
Direct	MODE CONTROL: AGS sw - AUTO or ATT HOLD GUID CONT sw - AGS ATTITUDE CONTROL: ROLL, PITCH, and YAW sw - DIR (selected on individual-axis basis)	Abort guidance signals interrupted on individual-axis basis.	Astronaut commands angular acceleration through on-and-off firing of thrusters (two-jet operation direct to secondary coils).	Translation commands along LM axes by on-and-off firing of thrusters when TTCA is moved out of detent	No rate damping in axis selected	No AGS control	Same as for automatic mode (AGS control), except that attitude commands for selected axis are directly applied to RCS secondary coils

Table 2.1-1. Control Electronics Section - Summary of Modes of Attitude Control

Mode	Switches and Positions	Guidance Signals	Manual Attitude Control	Manual Translation Control	Attitude Damping	Engine Gimbal Control	Remarks
Automatic (PGNS control)	MODE CONTROL: PGNS sw - AUTO GUID CONT sw - PGNS ATTITUDE CONTROL: ROLL, PITCH, and YAW sw - MODE CONT (normally)	Automatic steering and translation are performed by LGC commands to jet drivers.	N/A (See remarks for manual override)	Linear translation of LM by on-and-off firing of thrusters when TTCA is moved out of detent	Accomplished in LGC	Pitch and roll gimbal commands from LGC applied to DECA	All thruster commands from LGC go directly to primary preamplifiers. Attitude control function is overridden by operating ACA to hardover position, thereby commanding on-and-off four-jet operation through secondary coils of thruster solenoid valves. +X-axis translation is obtained by commanding four-jet operation direct to RCS secondary coils, by pressing +X TRANSL pushbutton on panel 5.
Attitude hold (PGNS control)	MODE CONTROL: PGNS sw - ATT HOLD GUID CONT sw - PGNS ATTITUDE CONTROL: ROLL, PITCH, and YAW sw - MODE CONT (normally)	Stabilization is accomplished by LGC commands to jet drivers.	Attitude rate commands are proportional to ACA displacement. LM attitude is held to value when ACA is returned to detent.	Linear translation of LM by on-and-off firing of thrusters when TTCA is moved.	Accomplished in LGC	Pitch and roll gimbal commands from LGC applied to DECA	Same as for automatic mode (PGNS control). Minimum impulse mode is made available by entering command into DSKY. In this mode, LGC commands one RCS pulse each time ACA is moved past 2.5° nominally from detent.
Automatic (AGS control)	MODE CONTROL: AGS sw - AUTO GUID CONT sw - AGS ATTITUDE CONTROL: ROLL, PITCH, and YAW sw - MODE CONT	Automatic steering signals from AGS are sent to CES to command changes in LM attitude.	N/A (See remarks for manual override)	Linear translation of LM by on-and-off firing of thrusters when TTCA is moved.	Rate gyro signals summed with steering signals	Pitch and roll gimbal commands derived from ATCA summed error channels	All thruster commands go through ATCA jet select logic and PRM. Attitude control function is overridden by operating ACA to hardover position, thereby commanding on-and-off four-jet operation through secondary coils of thruster solenoid valves and bypassing jet select logic, PRM's, and jet drivers. +X-axis translation is obtained by commanding four-jet operation direct to RCS secondary coils, by pressing +X TRANSL pushbutton. 2 or 4 jet operation on single axis basis optional for pitch or roll and X-translation with no MPS power. High and low gain rate depends on ascent/descent condition.
Attitude hold (AGS control)	MODE CONTROL: AGS sw - ATT HOLD GUID CONT sw - AGS ATTITUDE CONTROL: ROLL, PITCH, and YAW sw - MODE CONT	Automatic stabilization signals, which maintain LM attitude.	Applied attitude rate commands are proportional to ACA displacement. LM attitude is held to acquired value when ACA is returned to detent.	Translation commands along LM axes by on-and-off firing of thrusters when TTCA is moved out of detent	Rate gyro signals summed with stabilization signals	Pitch and roll gimbal commands derived from ATCA summed error channels	Same as for automatic mode (AGS control). High and low gain rate depends on ascent/descent condition.
Pulse	MODE CONTROL: AGS sw - AUTO or ATT HOLD GUID CONT sw - AGS ATTITUDE CONTROL: ROLL, PITCH, and YAW sw - PULSE (selected on individual-axis basis)	Abort guidance signals interrupted on individual-axis basis.	Astronaut commands angular acceleration through low-frequency pulsing of thrusters (two jets).	Translation commands along LM axes by on-and-off firing of thrusters when TTCA is moved out of detent	No rate damping in axis selected	No AGS control	Same as for automatic mode (AGS control)

2.1.3.5 General Operation of the Control Electronics on.

The PGNS, in conjunction with the CES, prov automatic control of LM attitude, transla- tion, and descent or ascent propulsion maneuvers. Autom control can be overridden by the astronauts, with manual inputs. As backup for PGNS control, the AGS plemented by manual inputs, can be used if the PGNS malfunctions. Table 2.1-1 contains a summar the CES modes of attitude control.

2.1.3.5.1 Attitude Control. (See figure 2.1-17.)

LM attitude is controlled by X, Y, and Z axes here are five modes of attitude control: automatic, attitude hold, pulse, direct, and hardover (man verride). The automatic and attitude hold modes are selected with the MODE CONTROL: PGNS or A witch; the pulse and direct modes, with the ATTITUDE CONTROL: ROLL, PITCH, and YAW switches.

Automatic Mode. The automatic mode provides fully autom attitude control. During PGNS control, the LGC generates the required thruster commands and ro them to the ATCA. The jet drivers in the ATCA provide thruster on and off commands to selected RC imary solenoids for attitude changes. In the abort guidance mode, roll, pitch, and yaw attitude erro gnals are generated in the AGS and sent to the ATCA. These error signals are passed through limiter nd then are combined with damping signals from the RGA, demodulated, passed through selectable dea d circuits, jet select logic circuits, PRM's and jet driver amplifiers, which fire the RCS jets. jet select logic determines which jets fire to correct the attitude errors. In the primary and abort gu ce modes, the astronaut can override attitude control about all three LM axes by initiating hardov commands with the ACA.

Attitude Hold Mode. This is a semiautomatic mode, in whi either astronaut can command an attitude change at an angular rate proportional to ACA displacemen LM attitude is held when the ACA is in the detent (neutral) position. In the primary guidance mode, ra commands proportional to ACA displace- ment are sent to the LGC. The LGC operates on these com nds and provides signals to the jet drivers in the ATCA to command rotation rates by means of the thr rs. When the ACA is returned to the neutral position, LM rotation stops and the LGC maintains new attitude. In the abort guidance mode, with the ACA in the neutral position, LM attitude is held by ans of AGS error signals. When an ACA is moved out of the detent position, the attitude error signal om the AGS are set to zero. Rate com- mands proportional to ACA displacement are processed in t ATCA, and the thrusters are fired until the desired vehicle rate is achieved. When the ACA is retu d to the detent position, the vehicle rate is reduced to zero and the AGS holds the LM in the new attitud

Pulse Mode. The pulse mode (minimum impulse control) is lected by a DSKY entry (verb 76) when the PGNS is in control and operating in the attitude hold mode. r minimum impulse control, the LGC commands a minimum impulse burn for each movement of t ACA beyond 2.5° of the detent position. The ACA must be momentarily returned to the detent positio between each impulse command. The maximum rate at which minimum impulses can be command is approximately five per second. In this mode, the astronaut performs rate damping and attitude ste ng. When the AGS is in control, the pulse mode is an open-loop mode. It is selected on an individual- s (roll, pitch, and yaw) basis by setting the appropriate ATTITUDE CONTROL switch (ROLL, PITCH r YAW) to PULSE. When the pulse mode is selected, automatic attitude control about the selected axi s disabled and a fixed train of pulses is generated when the ACA is displaced. To change attitude in s mode, the ACA must be moved past 2.5° from detent; this commands acceleration about the selected s. To terminate LM rotation, an opposite acceleration about the same axis must be commanded.

Direct Mode. The direct mode is also an open-loop accele n mode. It is selected on an individual- axis basis by setting the appropriate ATTITUDE CONTROL tch (ROLL, PITCH or YAW) to DIR. Automatic AGS attitude control about the selected axis is dis led and direct commands to two thrusters are routed to the RCS secondary solenoids when the ACA is laced 2.5°. The thrusters fire con- tinuously until the ACA is returned to the detent position.

Hardover Mode. In an emergency, the ACA can be displace the maximum limit (hardover position) to command an immediate attitude change about any axis. T displacement applies signals directly to the RCS secondary solenoids to fire four thrusters. This m over can be implemented in any attitude control mode.

Initial conditions for AGS operation require that the AGS STATUS switch be set to STANDBY, then to OPERATE. The time between closing the circuit breakers and setting the AGS STATUS switch to OPERATE should be 40 minutes; for at least the last 25 minutes, the switch should be set to STANDBY. Degraded performance is available after 10 minutes in the standby mode. When the AGS STATUS switch is set to OFF, the AEA has no functional capability. After 20 seconds in the standby mode, the AEA can accept the CDU zero signal and integrate the PGNS Euler angle changes. Complete AEA capability is afforded when the switch is set to OPERATE. In the operate mode, the AEA enters a core-priming routine that ensures that the memory is properly magnetized.

AGS operations are performed mainly through two DEDA addresses: 400 and 410. (Refer to Apollo Operations Handbook, Volume II, paragraph 4.4 for AGS selector logic list.) Address 400 is the AGS submode selector; address 410, the guidance routine selector. The selected routine is computed every 2 seconds, regardless of the submode selected. The AGS does not respond to orient the LM in accordance with the routine selected, unless DEDA address 400 (mode selector) is set to +00000 (attitude hold), +10000 (guidance steering), or +20000 (Z-axis steering).

When the LM is under full AGS control, the engine-on signal cannot be generated unless the guidance steering submode is selected. The engine-on signal is automatically generated after ullage has been sensed for three (DEDA-accessible constant) consecutive computer cycles (2 seconds per cycle). The AGS recognizes ullage to have occurred when the average acceleration in the +X-direction exceeds 0.1 fps^2. (The average acceleration is DEDA-accessible.) The ASA (containing the accelerometers) is located ahead of the center of gravity (in the +X-direction). Therefore, LM rotations cause sensed accelerations in the -X-direction. For this reason, LM rotations cannot cause the AGS to sense that ullage has occurred.

When the LM is not under full AGS control (neither the ABORT nor ABORT STAGE pushbutton has been pressed, or the MODE CONTROL: AGS switch is not set to AUTO, or the GUID CONT switch is not set to AGS), the AGS issues engine commands (on or off) that duplicate actual engine operation.

Under full AGS control, the ascent or descent engine is automatically commanded off when the velocity to be gained in the +X-direction is less than the nominal ascent engine thrust decay velocity and if the total velocity to be gained is less than a prescribed threshold (a DEDA-accessible constant currently set at 100 fps). This dual check maintains the engine on if an abort occurs during powered flight with the LM incorrectly oriented for the abort maneuver and the velocity to be gained large (greater than the 100-fps threshold).

When the velocity to be gained (LM under full AGS control) is less than 15 fps and the sensed thrust acceleration level in the +X-direction is greater than 0.1 fps^2, the desired thrust direction is fixed in inertial space (a form of attitude hold). If this were not done, the LM desired attitude might go through an undesirably wide excursion in an attempt to achieve perfect velocity cutoff conditions. Large variations near the end of a maneuver are undesirable. The velocity cutoff errors incurred by fixing the desired attitude before engine cutoff are small. After the maneuver is completed, small cutoff errors can be removed (if desired) by the axis-by-axis velocity trim capability of the AGS.

The descent stage is staged (when the AGS is in control) by pressing the ABORT STAGE pushbutton. The staging sequence begins only when engine-on commands are issued. During a thrusting maneuver, the staging sequence begins immediately upon pressing the ABORT STAGE pushbutton (assuming that all panel controls that transfer control of the LM to the AGS have been set properly). The AGS senses sufficient average thrust acceleration throughout the staging maneuver to maintain ullage. When the AGS receives verification from the CES that the ascent engine is on, the AGS automatically enters the attitude hold submode. After a prescribed interval, between zero and 10 seconds (DEDA-controlled, presently set at 1 second), the AGS automatically enters the normal guidance steering submode.

When the PGNS controls the LM (GUID CONT switch set to PGNS), the AGS is in the followup mode. Manual control of the LM by the astronauts (MODE CONTROL: PGNS switch set to ATT HOLD, attitude controller out of detent) also causes the followup signal to be routed to the AGS. In the followup mode, the AGS follows the PGNS by routing engine commands (on or off) in accordance with ascent or descent engine operation and provides zero attitude control error signals. The AGS provides attitude error signals (corresponding to the AEA guidance solutions) for the FDAI's when the PGNS is in control, the MODE CONTROL: PGNS switch is set to AUTO, the ATTITUDE MON switch is set to AGS, and the RATE/ERR MON switch is set to LDG RDR/CMPTR.

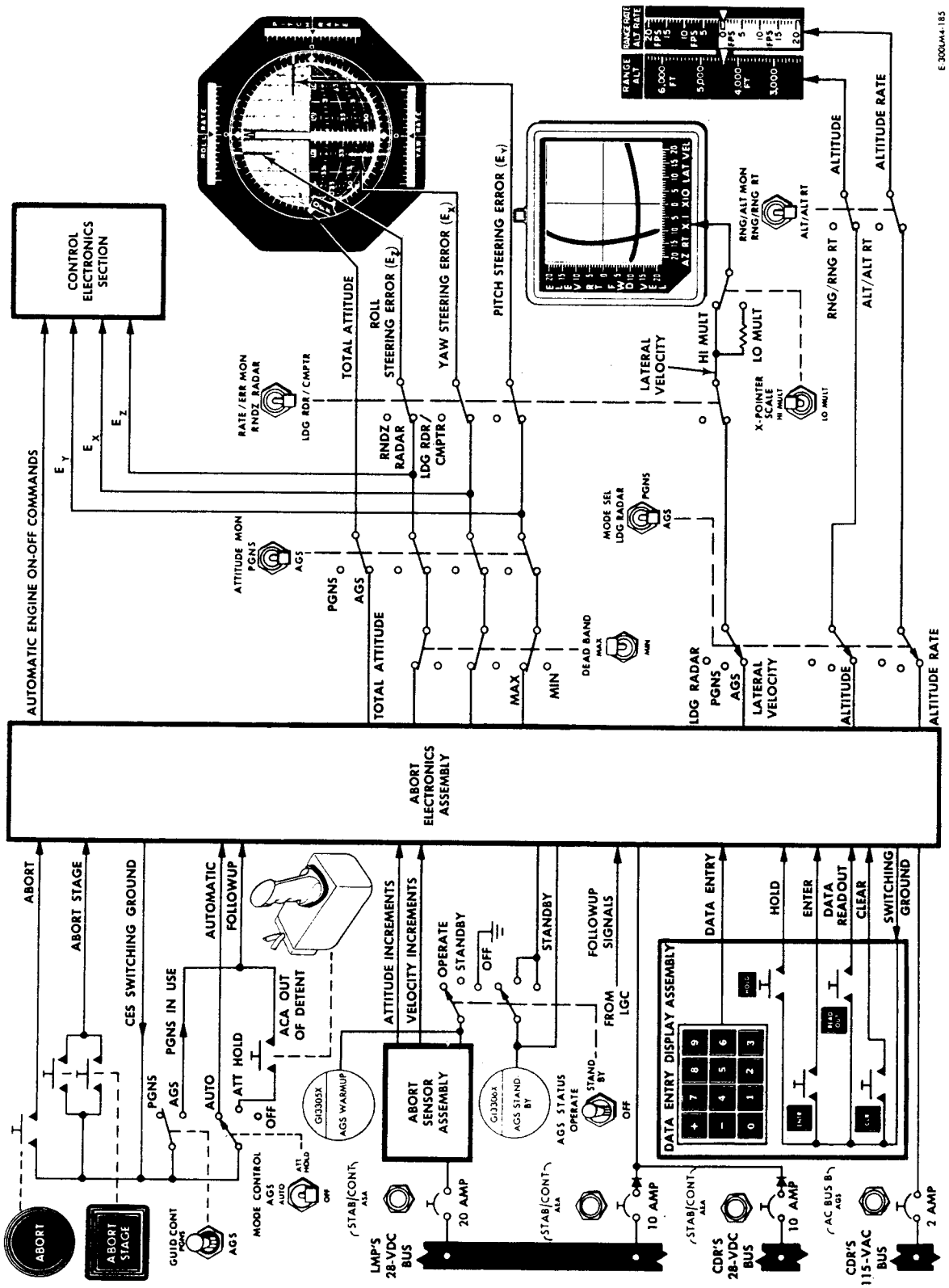

Figure 2.1-16. Abort Guidance Section - Functional Flow Diagram

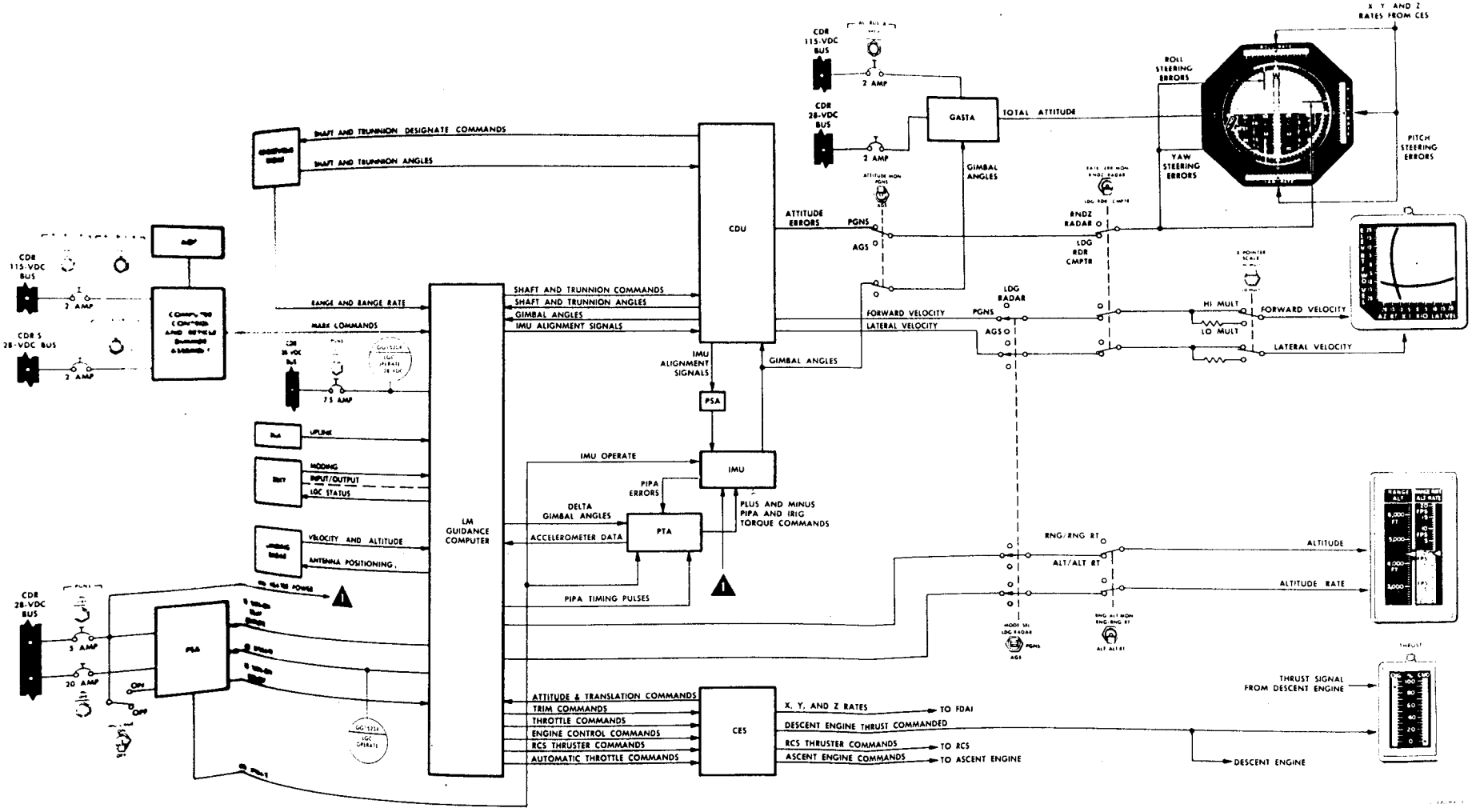

Figure 2.1-15. Primary Guidance and Navigation Section - Functional Flow Diagram

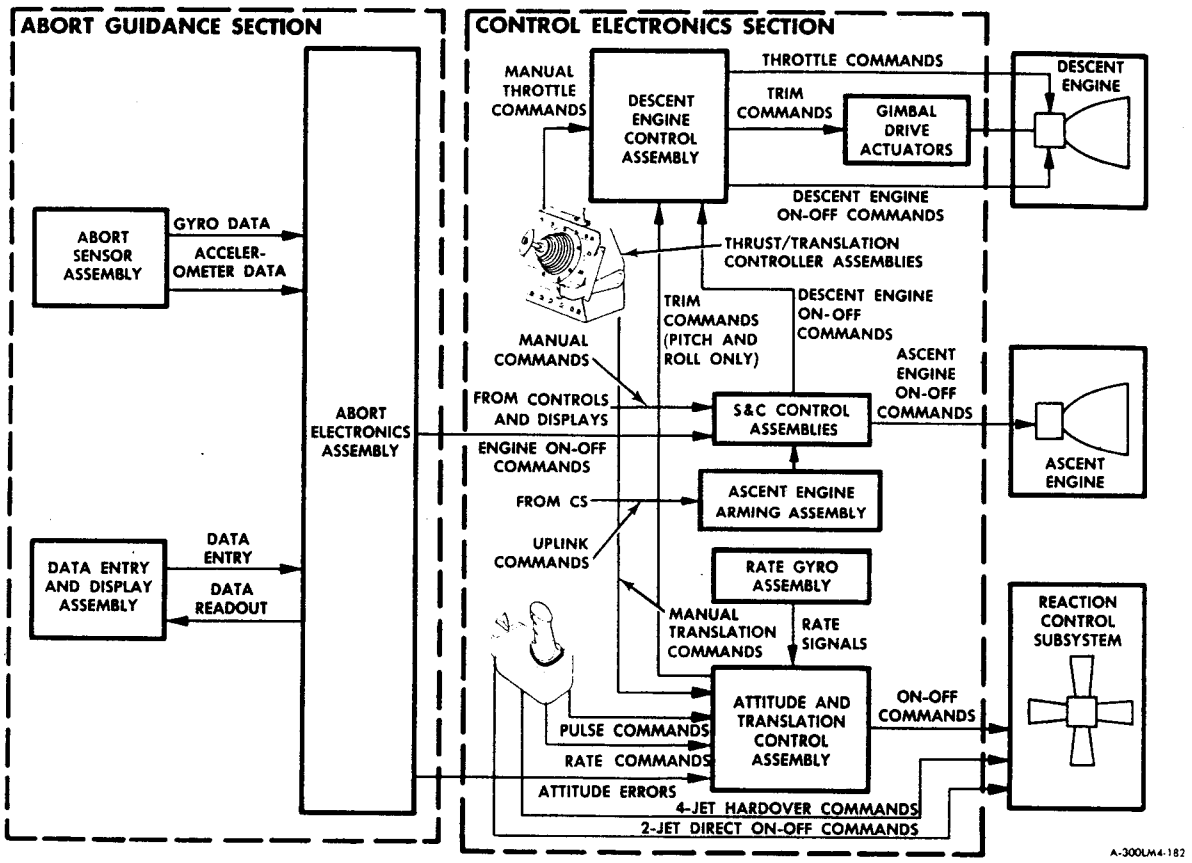

Figure 2.1-14. Abort Guidance Path - Simplified Block Diagram

The abort guidance path operates in the automatic mode or the attitude hold mode. In the automatic mode, navigation and guidance functions are controlled by the AGS; stabilization and control functions, by the CES. In the attitude hold mode, the astronaut uses his ACA to control vehicle attitude. The ACA generates attitude-rate, pulse, direct, and hardover commands. The attitude-rate and pulse commands, AEA error signals, RGA rate-damping signals, and TTCA translation commands are applied to the ATCA. The ATCA processes these inputs to generate thruster on and off commands.

In the attitude hold mode, pulse and direct submodes are available for each axis. The pulse submode is an open-loop attitude control mode in which the ACA is used to make small attitude changes in the selected axis. The direct submode is an open-loop attitude control mode in which pairs of thrusters are directly controlled by the ACA. The astronaut can also control vehicle attitude in any axis by moving the ACA to the hardover position. In addition, the astronaut can override translation control in the +X-axis with a +X-axis translation pushbutton. Pressing the pushbutton fires all four +X-axis thrusters.

2.1.3.3 General Operation of Primary Guidance and Navigation Section. (See figure 2.1-15.)

This discussion of PGNS operation is limited to astronaut interface with the PGNS, because PGNS operation is dependent upon the LGC program in process and upon the mission phase. The astronaut can perform optical sightings, monitor subsystem performance, load data, select the mode of operation, and, with the aid of the PGNS, manually control the LM. The program to be performed by the LGC is selected by the astronaut or initiated by the LGC.

The DSKY enables the astronaut to communicate with the LGC and perform a variety of tasks such as testing the LGC, entering voice link data, and commanding IMU mode switching. The hand controllers permit manual changes or computer-aided manual changes in attitude or translation. The PGNS

the IMU. Using inputs from the LR, IMU, RR, TTCA's, and ACA's, the LGC solves guidance, navigation, steering, and stabilization equations necessary to initiate on and off commands for the descent and ascent engines, throttle commands and trim commands for the descent engine, and on and off commands for the thrusters.

Control of the vehicle, when using the primary guidance path, ranges from fully automatic to manual. The primary guidance path operates in the automatic mode or the attitude hold mode. In the automatic mode, all navigation, guidance, stabilization, and control functions are controlled by the LGC. When the attitude hold mode is selected, the astronaut uses his ACA to bring the vehicle to a desired attitude. When the ACA is moved out of the detent position, proportional attitude-rate or minimum impulse commands are routed to the LGC. The LGC then calculates steering information and generates thruster commands that correspond to the mode of operation selected via the DSKY. These commands are applied to the primary preamplifiers in the ATCA, which routes the commands to the proper thruster. When the astronaut releases the ACA, the LGC generates commands to hold this attitude. If the astronaut commands four-jet direct operation of the ACA by going to the hard over position, the ACA applies the command directly to the secondary solenoids of the corresponding thruster.

In the automatic mode, the LGC generates descent engine throttling commands, which are routed to the descent engine via the DECA. The astronaut can manually control descent engine throttling with his TTCA. The DECA sums the TTCA throttle commands with the LGC throttle commands and applies the resultant signal to the descent engine. The DECA also applies trim commands, generated by the LGC, to the GDA's to provide trim control of the descent engine. The LGC supplies on and off commands for the ascent and descent engines to the S&C control assemblies. The S&C control assemblies route the ascent engine on and off commands directly to the ascent engine, and the descent engine on and off commands to the descent engine via the DECA.

In the automatic mode, the LGC generates +X-axis translation commands to provide ullage. In the manual mode, manual translation commands are generated by the astronaut, using his TTCA. These commands are routed, through the LGC, to the ATCA and on to the proper thruster.

2.1.3.2 Abort Guidance Path. (See figure 2.1-14.)

The abort guidance path comprises the AGS, CES, and the selected propulsion section. The AGS performs all inertial navigation and guidance functions necessary to effect a safe orbit or rendezvous with the CSM. The stabilization and control functions are performed by analog computation techniques, in the CES.

The AGS uses a strapped-down inertial sensor, rather than the stabilized, gimbaled sensor used in the IMU. The ASA is a strapped-down inertial sensor package that measures attitude and acceleration with respect to the vehicle body axes. The ASA-sensed attitude is supplied to the AEA, which is a high-speed, general-purpose digital computer that performs the basic strapped-down system computations and the abort guidance and navigation steering control calculations. The DEDA is a general-purpose input-output device through which the astronaut manually enters data into the AEA and commands various data readouts.

The CES functions as an analog autopilot when the abort guidance path is selected. It uses inputs from the AGS and from the astronauts to provide the following: on, off, and TTCA throttling commands for the descent engine; gimbal commands for the GDA's to control descent engine trim; on and off commands for the ascent engine; sequencer logic to ensure proper arming and staging before engine startup and shutdown; on and off commands for the thrusters for translation and stabilization, and for various maneuvers; jet-select logic to select the proper thrusters for the various maneuvers; and modes of vehicle control, ranging from fully automatic to manual.

The astronaut uses the TTCA to control descent engine throttling and translation maneuvers. The throttle commands, engine on and off commands from the S&C control assemblies, and trim commands from the ATCA are applied to DECA. The DECA applies the throttle commands to the descent engine, the engine on and off commands to the descent engine latching device, and the trim commands to the GDA's. The S&C control assemblies receive engine on and off commands for the descent and ascent engines from the AEA. As in the primary guidance path, the S&C control assemblies route descent engine commands to the DECA and apply ascent engine on and off commands directly to the ascent engine.

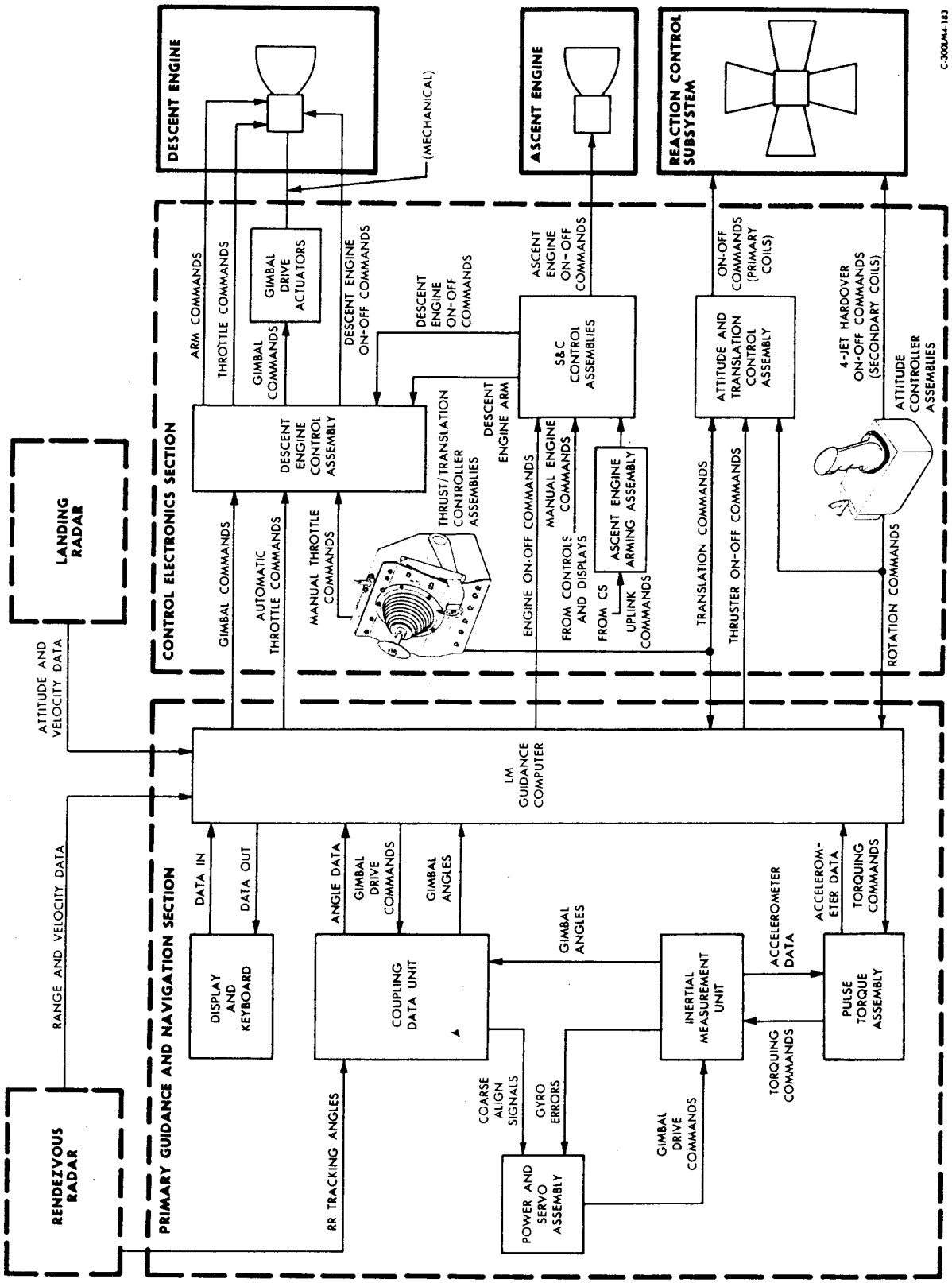

Figure 2.1-13. Primary Guidance Path - Simplified Block Diagram

2.1.2.5 GN&CS - CS Interface.

The Communications Subsystem (CS) interfaces directly with the GN&CS when the astronaut uses a push-to-talk switch on his ACA. When the switch is pressed, the ACA issues a d-c signal that enables an audio center in the signal-processor assembly of the VHF/AM communications. This enabling signal allows the audio signals from the microphones to be processed by the CS. Automatic remote control of the LGC is provided through use of a digital uplink assembly (DUA). Uplink commands from MSFN, processed by the DUA, are used for program control. The CS interfaces indirectly with the GN&CS, using VHF/AM communications for voice uplink commands. It also interfaces with a tone generator in the CES. The generator, enabled by a command from the master alarm circuit of the Instrumentation Subsystem (IS), issues a 1-kc tone to the astronaut headsets as an indication of a subsystem malfunction.

2.1.2.6 GN&CS - EDS Interface.

The GN&CS interfaces with the Explosive Devices Subsystem (EDS) by supplying a descent engine on signal to the supercritical helium explosive valve and an ascent engine on signal, which initiates the staging sequence. When the descent engine is operated for the first time, the MASTER ARM switch (panel 8) is set to ON so that the supercritical helium explosive valve is blown when the descent engine on signal is issued. All other normal pressurization and staging sequences are initiated by the astronauts.

During an emergency situation, the ABORT STAGE pushbutton when pushed, shuts down the descent engine and pressurizes the APS, blowing the helium tank explosive valves that are selected by the ASC He SEL switch (panel 8). After a time delay, the GN&CS generates an ascent engine on signal which initiates the staging sequence as the ascent engine begins to fire. Upon completion of staging, a stage status signal is routed from the EDS deadface switch to the ATCA and to the LGC. This signal automatically selects the power deadband for RCS control during ascent engine operation.

2.1.2.7 GN&CS - IS Interface.

The Instrumentation Subsystem (IS) senses GN&CS physical status data, monitors the GN&CS equipment, and performs in-flight checkout. The data signals are conditioned by the signal-conditioning electronics assembly (SCEA) and supplied to the pulse-code-modulation and timing electronics assembly (PCMTEA) and the caution and warning electronics assembly (CWEA). The PCMTEA changes the input signals to a serial digital form for transmission to MSFN. The CWEA checks the status of the GN&CS by continuously monitoring the information supplied by the SCEA. When an out-of-limits condition is detected by the CWEA, the CWEA energizes one or more of the caution and warning lights associated with the GN&CS.

The LGC interfaces directly with the IS to supply a 1.024-mc primary timing signal for the PCMTEA. This timing signal is used in generating timing and sync signals required by other subsystems. The IS supplies the LGC with telemetry data start and stop commands and sync pulses for clocking out telemetry data. It also supplies the AEA with telemetry stop commands and sync pulses.

2.1.3 FUNCTIONAL DESCRIPTION.

The GN&CS comprises two functional loops, each of which is an independent guidance and control path. The primary guidance path contains elements necessary to perform all functions required to complete the lunar mission. If a failure occurs in this path the abort guidance path can be substituted.

2.1.3.1 Primary Guidance Path. (See figure 2.1-13.)

The primary guidance path comprises the PGNS, CES, LR, RR, and the selected propulsion section required to perform the desired maneuvers. The CES routes flight control commands from the PGNS and applies them to the descent or ascent engine, and/or the appropriate thrusters.

The IMU, which continuously measures attitude and acceleration, is the primary inertial sensing device of the vehicle. The LR senses slant range and velocity. The RR coherently tracks the CSM to derive LOS range, range rate, and angle rate. The LGC uses AOT star-sighting data to align

Throttle commands to the descent engine are generated automatically by the LGC under program control, or manually with a TTCA. The TTCA can be used to override LGC throttle commands. The AGS cannot throttle the descent engine. Throttle commands cause the throttle actuator of the descent engine to change the position of the flow control valves and vary the injector orifice of the engine. Changing the position of the flow control valves changes the quantity of fuel and oxidizer metered into the engine and thus changes the magnitude of engine thrust.

The GN&CS generates trim commands to tilt the descent engine to control the direction of the thrust vector. The descent engine is tilted about the LM Y-axis and Z-axis to compensate for the offset of the center of gravity due to fuel depletion during descent engine operation. The thrust vector is controlled by the LGC with the aid of two GDA's. The GDA's are pinned to the descent engine and the LM structure along the Y-axis (roll) and Z-axis (pitch). When actuated, the GDA's extend or retract a screwjack-actuated arm that tilts the engine to attain the desired thrust vector. Thrust vector control for the ascent engine is achieved through firing of selected upward-firing TCA's.

2.1.2.2 GN&CS - RCS Interface.

The GN&CS provides on and off commands to the 16 TCA's (referred to as thrusters or jets) to control LM attitude and translation. In the primary mode of operation (PGNS in control), the LGC generates the required commands and sends them to the proper jet drivers in the CES. The jet drivers send selected on and off commands to the RCS primary solenoids. In the secondary mode of operation (AGS in control), the AGS supplies the CES with attitude errors. The ATCA in the CES uses these inputs to select the proper thruster for attitude and translation control.

The thrusters are controlled manually with an ACA and a TTCA. The ACA provides attitude commands and the TTCA provides translation commands to the LGC during the primary mode of operation and to the ATCA during the secondary mode of operation. The ACA can fire the thrusters directly during the pulse, direct, and hardover modes, bypassing the LGC or AEA, and the ATCA. The four downward-firing thrusters may be fired by pressing the +X TRANSL pushbutton (panel 5). The on and off commands supplied to the thruster take the form of a step function. The duration of the signal determines the firing time of the selected thruster, which ranges from a pulse (less than 1 second) to steady-state (1 second or longer).

Each thruster contains an oxidizer solenoid valve and a fuel solenoid valve which, when open, pass propellant through an injector into the combustion chamber, where ignition occurs. Each valve contains a primary (automatic) solenoid and a secondary (direct) solenoid, which open the valve when energized. On and off commands from the ATCA are applied to the primary solenoids; the direct commands are applied to the secondary solenoids.

2.1.2.3 GN&CS - EPS Interface.

The Electrical Power Subsystem (EPS) supplies primary d-c and a-c power to the GN&CS. This power originates from six silver-zinc batteries (four in the descent stage and two in the ascent stage). An additional battery has been added in the ascent stage for LM 10 and subsequent. The descent batteries feed power to the buses during all operations, before staging. Immediately before staging occurs, ascent battery power is switched on and descent battery power is terminated. A deadface relay circuit deadfaces the descent batteries when normal staging occurs. Under emergency conditions, when the ABORT STAGE pushbutton is pressed, a power switchover command, which initiates deadfacing automatically, is routed to the EPS. The 28-volt d-c battery power is routed through an inverter to provide 115-volt, 400-cps ac to the GN&CS equipment. Refer to paragraph 2.1.3.6 for a functional description of power distribution.

2.1.2.4 GN&CS - ECS Interface.

The Environmental Control Subsystem (ECS) provides thermal stability for the temperature-sensitive electronic equipment of the GN&CS. The electronic equipment (except the IMU) is mounted on cold plates and rails through which ECS coolant (ethylene glycol-water solution) is routed to remove heat. To cool the IMU, the coolant flows through its case. The heat that is removed from the equipment is vented overboard by the ECS sublimators.

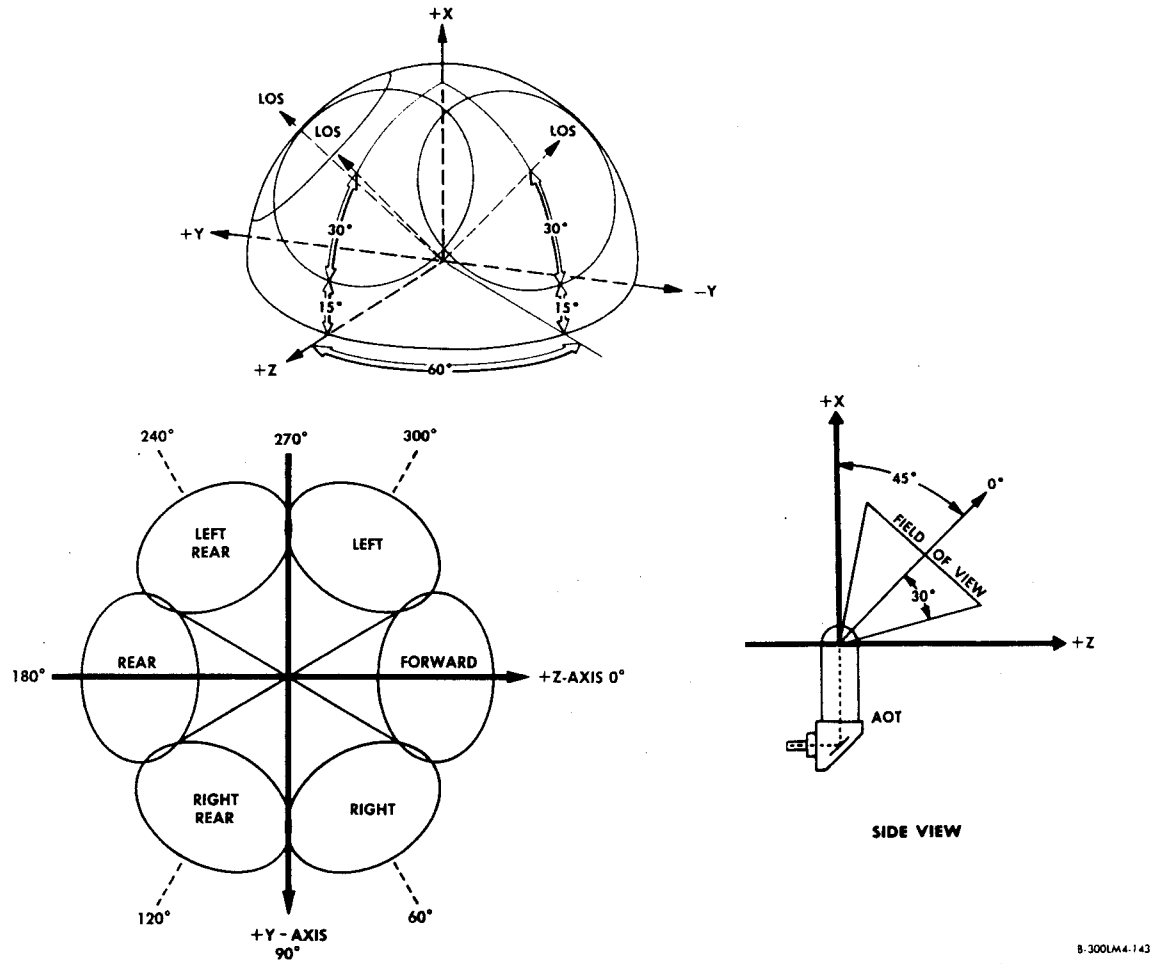

Figure 2.1-12. Alignment Optical Telescope Axes

this involves setting the ENG ARM switch to the desired position. Depending on the switch setting, a discrete is generated in the CES to enable the START pushbutton (panel 5) for ascent engine operation or to operate actuator isolation valves for descent engine operation. Under abort or emergency conditions, the ABORT and ABORT STAGE pushbuttons (panel 1) are used to perform the arming function.

When the PGNS is in control, on and off commands are generated automatically by the LGC under program control, or manually with the START pushbutton (panel 5) and stop pushbuttons (panels 5 and 6). With the AGS in control, on and off commands are generated automatically by the AEA (an abort guidance computer) under specific routines, or manually with the START and stop pushbuttons. The on and off commands actuate pilot valves, which hydraulically open or close the fuel and oxidizer shutoff valves. Under emergency conditions, the ascent engine ignition sequence may also be automatically completed through use of the ABORT STAGE pushbutton. If the ascent engine-on command from either computer is lost, a memory circuit in the CES keeps issuing the command to the ascent engine.

The descent engine receives on and off commands, throttle commands, and trim commands from the DECA. The ignition sequence commands for the descent engine are generated automatically or manually in a manner similar to that of the ascent engine. On and off commands are routed from either computer (dependent on the guidance mode selected), or the START and stop pushbuttons, through the DECA to actuate the descent engine pilot valves.

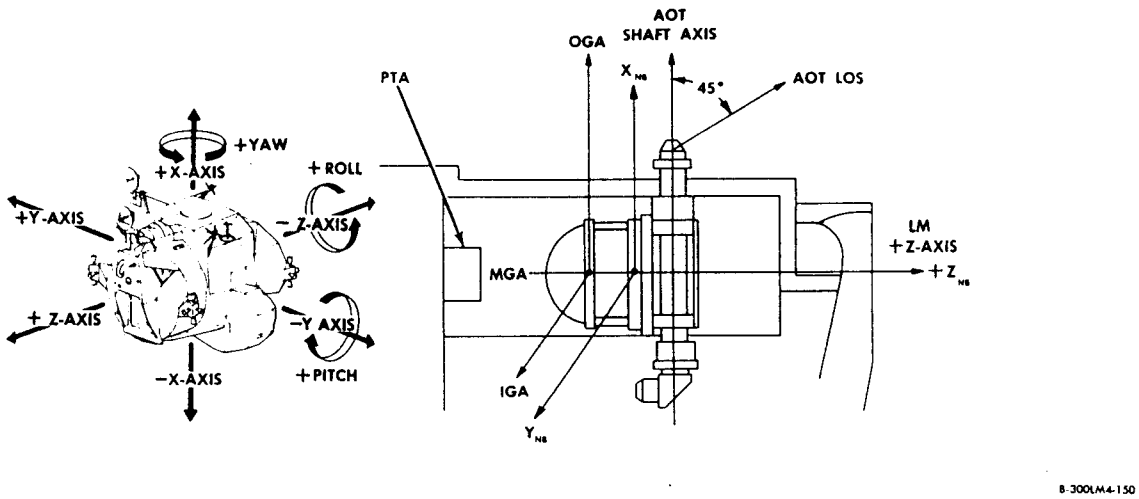

Figure 2.1-11. LM Vehicle and GN&CS Axes

2.1.1.5.3 IMU Axes.

The IMU axes are defined by the three gimbal axes. These axes are designated as outer gimbal axis (OGA), middle gimbal axis (MGA), and inner gimbal axis (IGA). The gimbal axes are defined when the gimbal angles are 0°; they are as follows: the OGA is parallel to the X-axis, the MGA is parallel to the Z-axis, and the IGA is parallel to the Y-axis. The axes of the IMU stable member are parallel to the vehicle axes and the gimbal axes when the gimbal angles are 0°.

Inertial Reference Integrating Gyro Axes. The inertial reference integrating gyro (IRIG) axes, designated Xg, Yg, and Zg, are parallel to the LM vehicle axes. If the attitude of the stable member is changed with respect to inertial space, the gyro senses the change about its axis and provides an error signal to the stabilization loop of the IMU.

Pulse Integrating Pendulous Accelerometer Axes. The pulse integrating pendulous accelerometer (PIPA) axes, designated Xa, Ya, and Za, are parallel to the LM body-axes. Velocity changes are measured along the PIPA axes.

2.1.1.5.4 Alignment Optical Telescope Axes. (See figure 2.1-12.)

The AOT is mounted to the navigation base so that the AOT shaft axis is parallel to the X-axis. The telescope LOS is approximately 45° above the vehicle Y-Z plane. The AOT LOS is fixed in elevation and movable in azimuth to six detent positions. These detent positions are selected manually by turning a detent selector knob on the AOT; they are located at 60° intervals. All six positions (forward, right, right rear, rear, left rear, and left) are used for star sightings. The forward (F), or zero, detent position places the LOS in the X-Z plane, looking forward and up as one would look from inside the LM. The right (R) and right rear (R_R) detent positions place the LOS 60° and 120°, respectively, to the right of the X-Z plane. Similarly, the left (L) and the left rear (L_R) detent positions place the LOS 60° and 120°, respectively, to the left of the X-Z plane. The rear (CL) detent position places the LOS in the X-Z plane, looking aft as one would look from inside the LM. In addition, the CL position (180° from the F position) is the stowage position. Each position maintains the LOS at 45° from the LM + X-axis.

2.1.2 SUBSYSTEM INTERFACES. (See figure 2.1-2.)

2.1.2.1 GN&CS - MPS Interfaces.

The GN&CS provides a sequence of commands to the Main Propulsion Subsystem (MPS) to control the ascent and descent engines. For ignition to occur, the engine must first be armed. Normally,

The ATCA routes the RCS thruster on and off commands from the LGC to the thrusters, in the primary control mode. During abort guidance control, the ATCA acts as a computer in determining which RCS thrusters are to be fired.

2.1.1.3.4 Rate Gyro Assembly.

The RGA supplies the ATCA with damping signals to limit vehicle rotation rates and facilitates manual rate control during abort guidance control.

2.1.1.3.5 Descent Engine Control Assembly.

The DECA processes engine-throttling commands from the astronauts (manual control) and the LGC (automatic control), gimbal commands for thrust vector control, preignition (arming) commands, and on and off commands to control descent engine operation.

The DECA accepts engine-on and engine-off commands from the S&C control assemblies, throttle commands from the LGC and the TTCA, and trim commands from the LGC or the ATCA. Demodulators, comparators, and relay logic circuits convert these inputs to the required descent engine commands. The DECA applies throttle and engine control commands to the descent engine and routes trim commands to the gimbal drive actuators.

2.1.1.3.6 Gimbal Drive Actuators.

The GDA's, under control of the DECA, tilt the descent engine along the pitch and roll axes so that the thrust vector goes through the LM center of gravity.

2.1.1.3.7 Ascent Engine Arming Assembly.

The AEAA provides a means of arming and firing the ascent engine under remote control. Under remote control, MSFN can select PGNS or AGS control of ascent engine firing through uplink commands processed by the Communications Subsystem. The AEAA performs this function by duplicating the functions of the ENG ARM and GUID CONT switches (panel 1), using relay logic.

2.1.1.3.8 S&C Control Assemblies.

The three S&C control assemblies are similar assemblies. They process, switch, and/or distribute the various signals associated with the GN&CS.

2.1.1.4 Orbital Rate Display - Earth and Lunar.

The ORDEAL provides an alternative to the attitude display, in pitch only. When selected, the ORDEAL produces an FDAI display of computed local vertical attitude during circular orbits around the earth.

2.1.1.5 LM Vehicle, and Guidance, Navigation, and Control Subsystem Axes. (See figure 2.1-11.)

Several sets of axes are associated with the LM and the GN&CS. Each set is a three-axis, right-hand, orthogonal coordinate system. Figure 2.1-11 shows the relationships of various sets of axes when the IMU gimbal angles are 0°.

2.1.1.5.1 LM Vehicle Axes.

The X-axis positive direction is through the overhead hatch; the Z-axis positive direction is through the forward hatch. The Y-axis is perpendicular to the X-Z plane.

2.1.1.5.2 Navigation Base Axes.

The navigation base (NB) is mounted to the LM structure so that a coordinate system is formed by its mounting points. The Y_{NB} axis is parallel to the vehicle Y-axis. The X_{NB} axis is parallel to the vehicle X-axis. The Z_{NB} axis is perpendicular to the X_{NB}-Y_{NB} plane and parallel to the vehicle Z-axis.

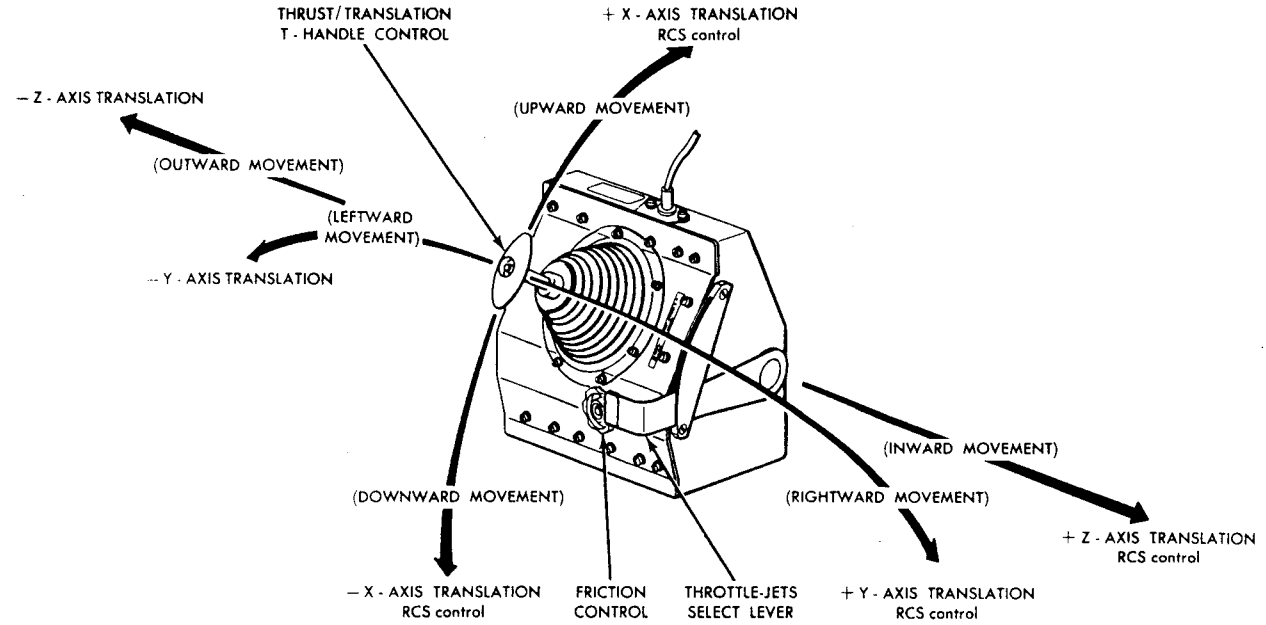

THROTTLE-JETS SELECT LEVER SET TO JETS

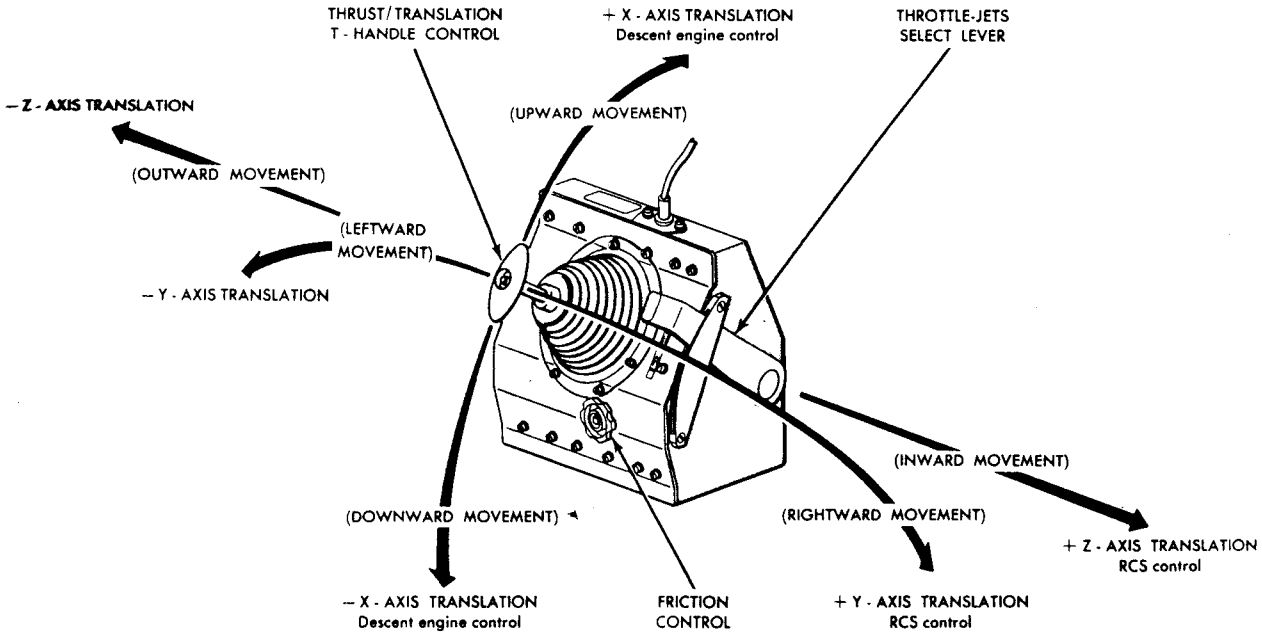

THROTTLE-JETS SELECT LEVER SET TO THROTTLE

300LM4-156

Figure 2.1-10. TTCA Manipulations

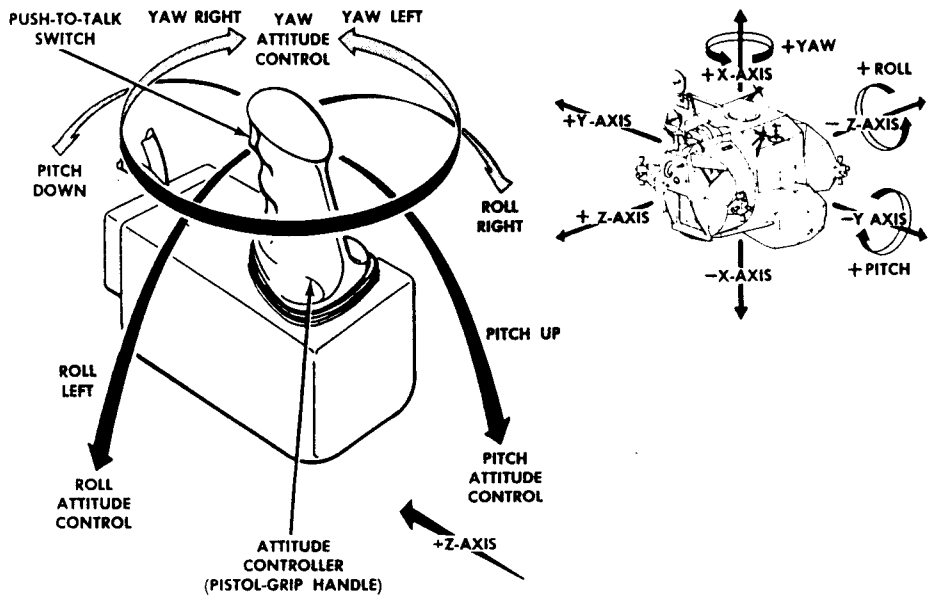

Figure 2.1-9. ACA Manipulations

2.1.1.3.2 Thrust/Translation Controller Assemblies. (See figure 2.1-10.)

The TTCA's control LM translation in any axis; they are functionally integrated translation and thrust controllers. The astronauts use these assemblies to command vehicle translations by firing RCS thrusters and to throttle the descent engine between 10% and 92.5% thrust magnitude. The controllers are three-axis, T-handle, left-hand controllers, mounted with their longitudinal axis approximately 45° from a line parallel to the LM Z-axis (forward axis).

A lever on the right side of the TTCA enables the astronaut to select either of two control functions: (1) translation control in the Y-axis and Z-axis, using the RCS thrusters, and descent engine throttling to control X-axis translation and (2) translation control in all three axes, using the RCS thrusters. Due to the TTCA mounting position, vehicle translations correspond to astronaut hand movements when operating the controller. Moving the T-handle to the left or right commands translation along the Y-axis. Moving the T-handle inward or outward commands translation along the Z-axis. Moving the T-handle upward or downward commands translation along the X-axis, using the RCS thrusters, when the select lever is in the down position. When the lever is in the up position, upward or downward movement of the TTCA increases or decreases, respectively, the magnitude of descent engine thrust. Regardless of the select lever position selected, the TTCA can command translation along the Y-axis and Z-axis, using the RCS thrusters.

2.1.1.3.3 Attitude and Translation Control Assembly.

The ATCA controls vehicle attitude and translation by issuing on-off commands to the RCS thrusters. In primary guidance control, attitude and translation commands are generated by the LGC and applied directly to jet drivers within the assembly. In the abort guidance path, the ATCA receives translation commands from a TTCA, rate-damping signals from the RGA, and attitude rate commands and pulse commands from the ACA. The ATCA combines attitude and translation commands in its logic network to select the proper thruster to be fired for the desired translation and/or rotation.

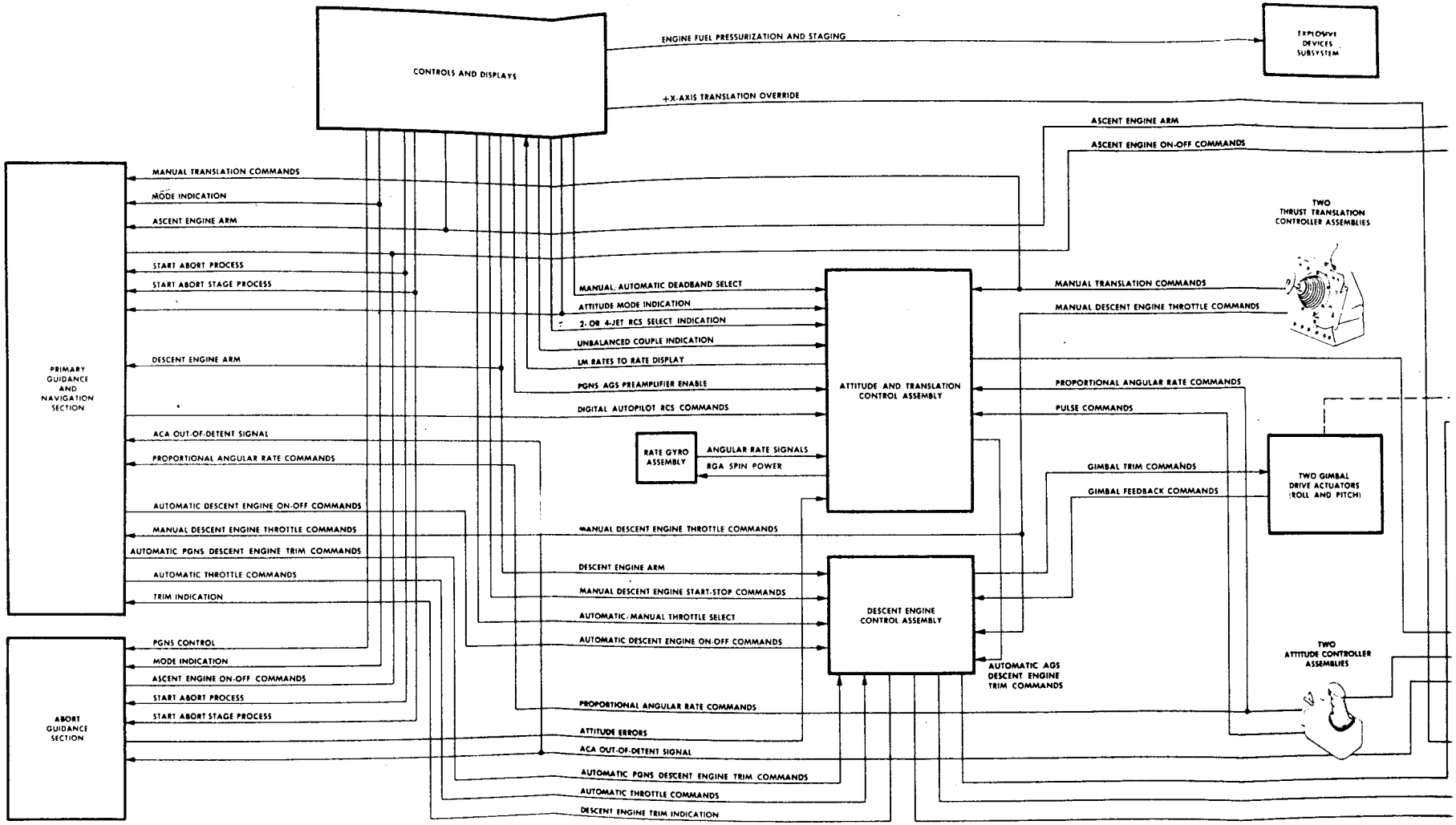

Figure 2.1-8. Co

GUIDANCE, NA

Mission LM Basic Date 1 February 1

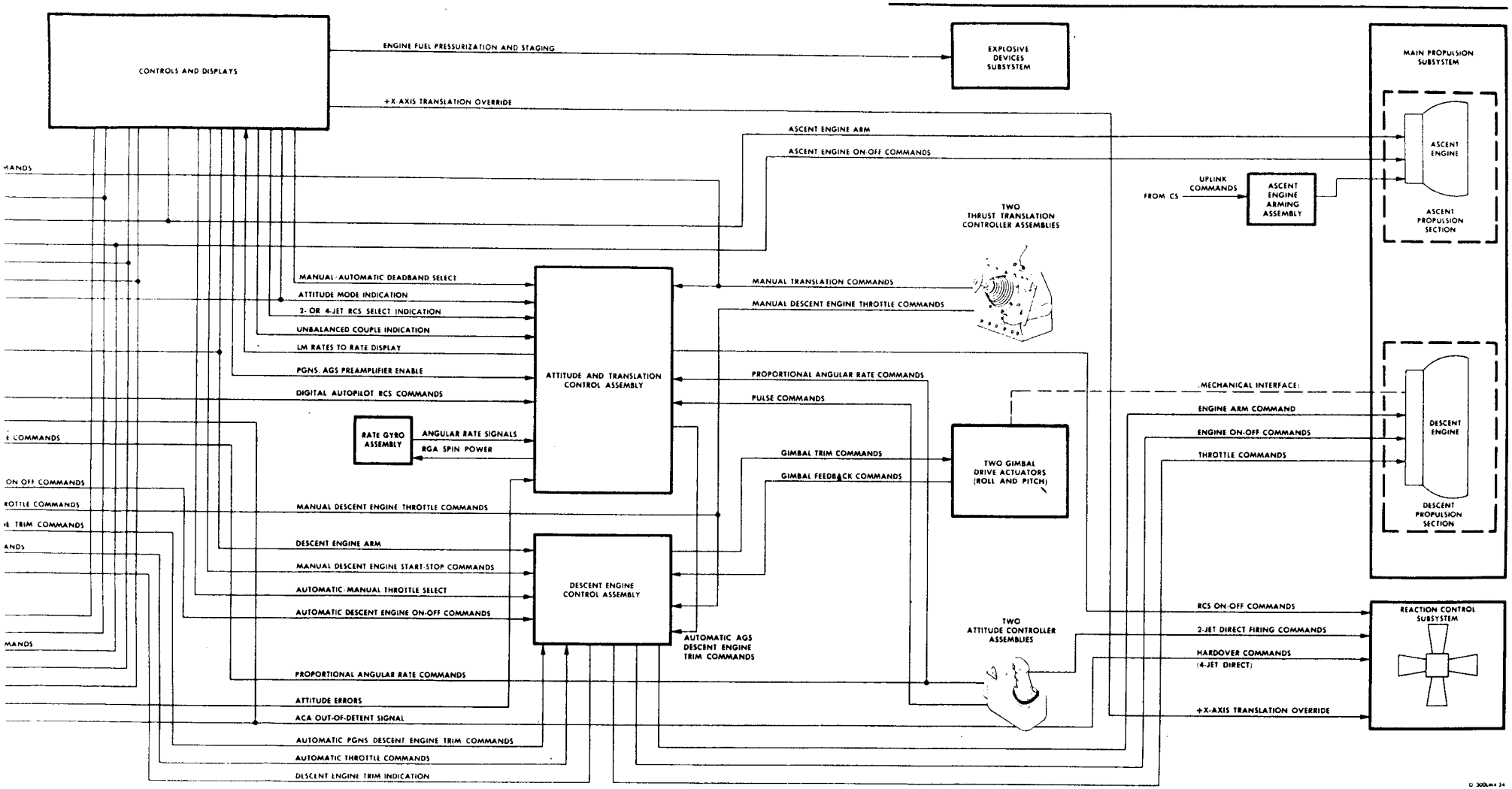

Figure 2.1-8. Control Electronics Section - Block Diagram

The guidance computational section provides trajectory computation and selection, steering computation, and midcourse-correction computation. This computational section receives data relating to the CSM state vector and the LM state vector from the LGC in other external source through the AGS input selector logic. The state vector is the vehicles attitude and velocity for a given mission time. Body-referenced steering errors are received from the stabilization and alignment computational section, for trajectory computation. The LM abort guidance problem consists of solving the equations of the selected guidance maneuver, including steering, attitude, and engine control computations. Outputs of the guidance computational section, through the output select logic circuits, include engine on and off signals to the CES, and velocity to be gained (selectable by DEDA readout).

2.1.1.3 Control Electronics Section. (See figure 2.1-8.)

The CES processes attitude and translation signals when operating in the primary guidance mode or the abort guidance mode.

When operating in the primary mode, the CES converts RCS commands to the required electrical power to operate the RCS solenoid valves. The CES accepts discrete (on and off) descent engine gimbal commands and, upon receipt of an on command, causes the descent engine to move about its gimbal axis. The CES accepts LGC and manual engine on and off commands and routes them to the MPS to fire or stop the descent or ascent engine. The CES accepts LGC and manual thrust commands to throttle the descent engine (10% to 92.5% of maximum thrust). The CES also provides manual attitude and translation commands to the LGC.

When operating in the abort guidance mode, the CES accepts attitude error signals from the AGS, or manual attitude rate commands from the attitude hand controller or rate-damping signals from a gyro assembly, and fires the RCS thrusters to achieve attitude control. The CES accepts manual translation commands and fires the appropriate thrusters to accelerate the LM in the desired direction. The CES automatically gimbals the descent engine for trim control in accordance with signal polarity. The CES accepts AGS and manual engine on and off commands and routes them to the descent or ascent engine. The CES accepts manual throttle commands to control descent engine thrust and accepts manual rotational, low-amplitude acceleration, open-loop commands.

The CES comprises two attitude controller assemblies (ACA's), two thrust/translation controller assemblies (TTCA's), an attitude and translation control assembly (ATCA), a rate gyro assembly (RGA), descent engine control assembly (DECA), two gimbal drive actuators (GDA's), an ascent engine arming assembly (AEAA), and three stabilization and control (S&C) control assemblies.

2.1.1.3.1 Attitude Controller Assemblies. (See figure 2.1-9.)

The ACA's are right-hand pistol grip controllers, which the astronauts use to command changes in vehicle attitude. Each ACA is installed with its longitudinal axis approximately parallel to the X-axis. Each ACA supplies attitude rate commands proportional to the displacement of its handle, to the LGC and the ATCA; an out-of-detent discrete each time the handle is out of its neutral position; and a followup discrete to the AGS each time the controller is out of detent. A trigger-type push-to-talk switch on the pistol grip handle of the ACA is used for communication with the CSM and ground facilities.

As the astronaut uses his ACA, his hand movements are analogous to vehicle rotations. Clockwise or counterclockwise rotation of the controller commands yaw right or yaw left, respectively. Forward or aft movement of the controller commands vehicle pitch down or up, respectively. Left or right movement of the controller commands roll left or right, respectively.

The ACA's are also used in an incremental landing point designator (LPD) mode, which is available to the astronauts during the final approach phase. In this mode, the angular error between the designated landing site and the desired landing site is nulled by repetitive manipulation of an ACA. LPD signals from the ACA are directed to the LGC, which issues commands to move the designated landing site incrementally along the Y-axis and Z-axis.

The ASA consists of three strapped-down pendulous accelerometers, three strapped-down gyros, and associated electronic circuitry. The accelerometers and gyros (one each for each vehicle axis) sense body-axis motion with respect to inertial space. The accelerometers sense acceleration along the vehicle orthogonal axis. The gyros and accelerometers are securely fastened to the vehicle X, Y, and Z axes so that motion along or around one or more axis is sensed by one or more gyros or accelerometers.

2.1.1.2.2 Data Entry and Display Assembly. (See figure 2.1-7.)

The DEDA (panel 6) is used by the astronauts to select the desired mode of operation, insert the desired targeting parameters, and monitor related data throughout the mission. Essentially, the DEDA consists of a control panel to which electroluminescent displays and data entry pushbuttons are mounted and a logic enclosure that houses logic and input-output circuits.

2.1.1.2.3 Abort Electronics Assembly.

The AEA is a general-purpose, high-speed, 4,096-word digital computer that performs basic strapped-down guidance system calculations and the abort guidance and navigation steering calculations. The computer uses a fractional two's complement, parallel arithmetic section, and parallel data transfer. The AEA has three software computational sections: stabilization and alignment, navigation, and guidance.

The stabilization and alignment computational section computes stabilization and alignment on generation of mode signals by the DEDA. These mode signals (attitude hold, guidance steering, Z-axis steering, PGNS-to-AGS alignment, lunar align, gyro and accelerometer calibration, and body-axis align) determine the operation of the stabilization and alignment computational section in conjunction with the navigation and guidance computational sections. The body-referenced steering error signals and total attitude sine and cosine signals are used to control the FDAI. Direction cosine data are routed to the navigation computational section, where they are used in computing lateral velocity and inertial acceleration data.

The navigation computational section uses accelerometer inputs received from the ASA, via AEA input logic circuits, to calculate LM position and velocity in the inertial reference frame. The navigation computational section supplies total velocity, altitude, and altitude-rate data, and lateral velocity data in the LM reference frame, to the output logic circuits. Velocity data are routed to the DEDA, altitude-rate data are routed to the ALT RATE indicator (panel 1), and lateral velocity data are routed to the X-pointer indicators (panels 1 and 2). Velocity and position data are routed to the guidance computational section, for computing LM orbital parameters.

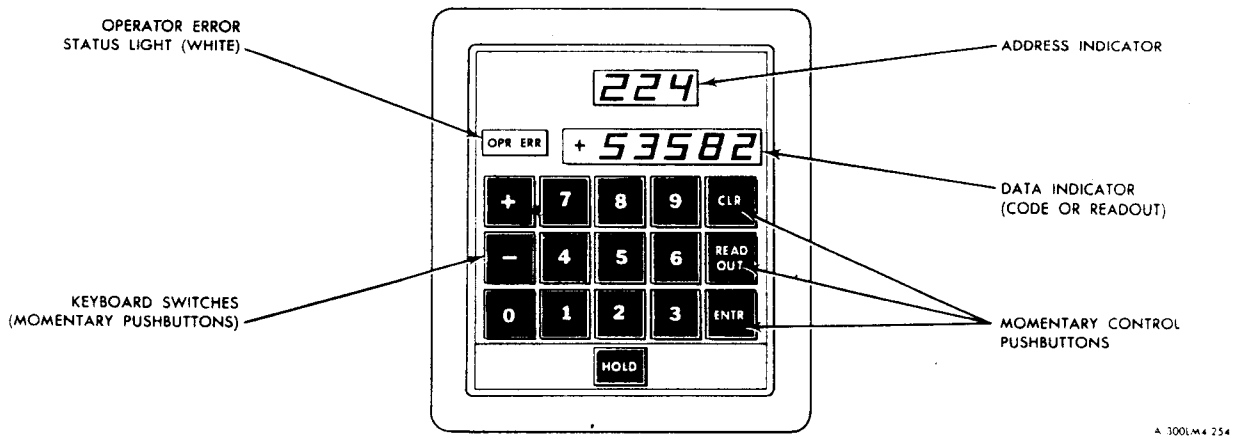

Figure 2.1-7. Data Entry and Display Assembly - Pictorial

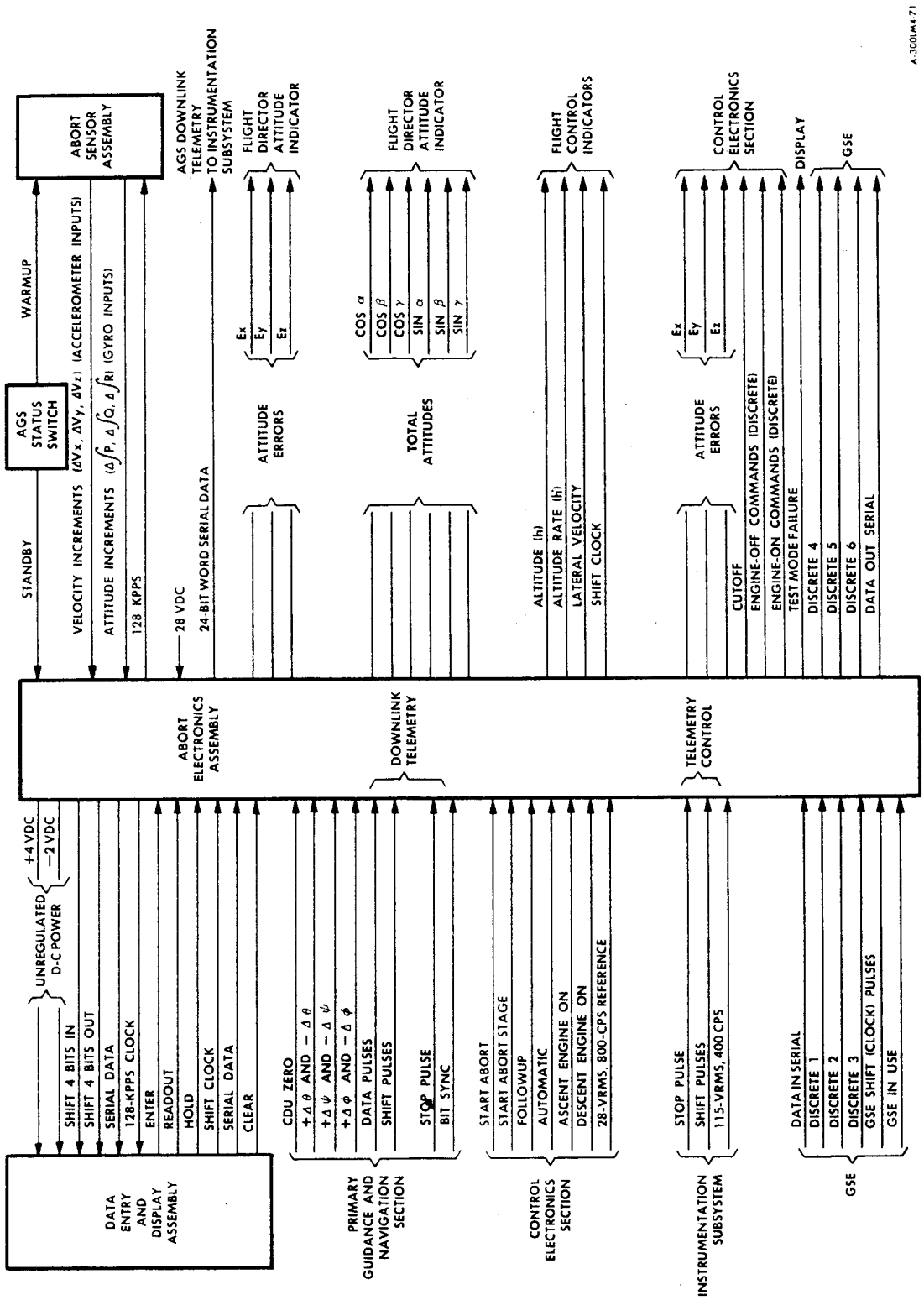

Figure 2.1-6. Abort Guidance Section - Block Diagram

GN&

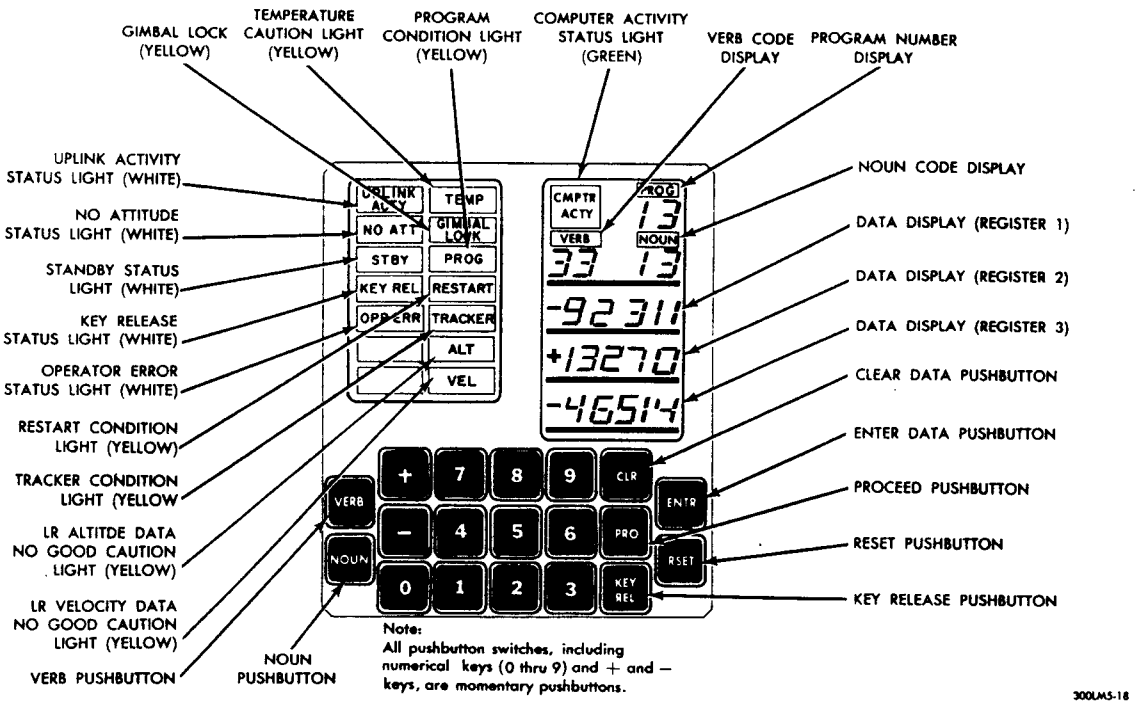

Figure 2.1-5. Display and Keyboard Assembly

The AGS provides steering commands for three steering submodes: attitude hold, guidance steering, and acquisition steering. The attitude hold submode maintains the vehicle attitude that exists when the submode is entered. In the guidance steering submode, the AEA generates attitude commands to orient the LM X-axis so that it lies along the direction of the thrust vector. In the acquisition steering submode, the AEA generates attitude commands to orient the LM Z-axis along the estimated line of sight (LOS) between the LM and CSM.

The AGS outputs an engine-on or engine-off command during all thrusting maneuvers. If the PGNS is in control, the command is a followup of the signal produced by the PGNS. If the AGS is in control, the engine-on command can be routed only after the appropriate switches are set and the ullage maneuver has been performed. When proper velocity-to-be-gained are achieved, an engine-off command is issued.

The AGS uses RR angle information and accepts range and range-rate information from the RR for updating LM navigation so that the LM Z-axis is toward the CSM, or for midcourse correction. These data are manually inserted into the AEA by the astronaut by using the DEDA.

The AGS automatically aligns the strapped-down inertial system of the ASA by computing the direction cosines that relate the LM body axes to the desired inertial coordinate system. It also provides in-flight gyro and accelerometer calibration to compensate for fixed non-g gyro drift, and telemetry data for MSFN through the IS.

2.1.1.2.1 Abort Sensor Assembly.

The ASA, by means of gyros and accelerometers, provides incremental attitude information around the vehicle X, Y, and Z axes and incremental velocity changes along the vehicle X, Y, and Z axes. Data pulses are routed to the AEA, which uses the attitude and velocity data for computation of steering errors. The ASA is mounted on the navigation base above the astronauts' heads, between the crew compartment and the thermal and micrometeoroid shield.

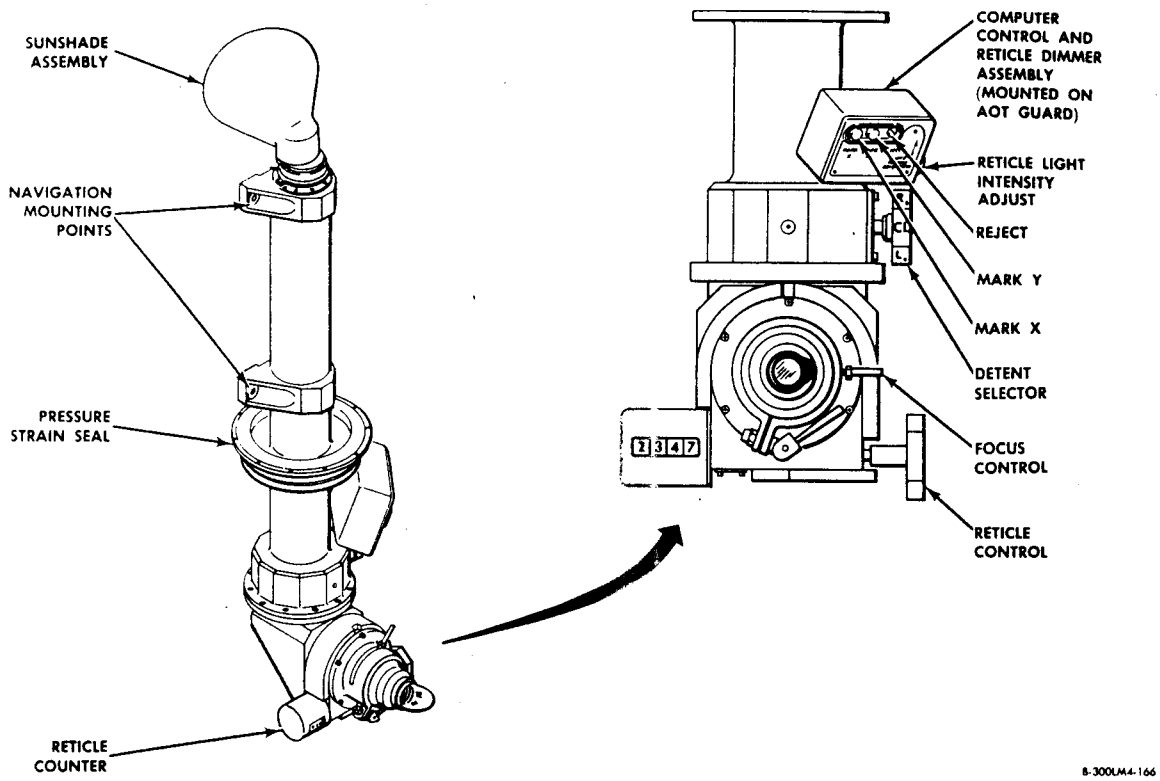

Figure 2.1-4. Alignment Optical Telescope

2.1.1.1.10 Display and Keyboard. (See figure 2.1-5.)

Through the DSKY, the astronauts can load information into the LGC, retrieve and display information contained in the LGC, and initiate any program stored in memory. The astronauts can also use the DSKY to control the moding of the ISS. The exchange of data between the astronauts and the LGC is usually initiated by an astronaut; however, it can also be initiated by internal computer programs.

The DSKY is located on panel 4, between the Commander and LM Pilot and above the forward hatch. The upper half is the display portion; the lower half comprises the keyboard. The display portion contains five caution indicators, six status indicators, seven operation display indicators, and three data display indicators. These displays provide visual indications of data being loaded in the LGC, the condition of the LGC, and the program being used. The displays also provide the LGC with a means of displaying or requesting data.

2.1.1.2 Abort Guidance Section. (See figure 2.1-6.)

The AGS consists of an abort sensor assembly (ASA), abort electronics assembly (AEA), and a data entry and display assembly (DEDA). The ASA performs the same function as the IMU; it establishes an inertial reference frame. The AEA, a high-speed, general-purpose digital computer, is the central processing and computational device for the AGS. The DEDA is the input-output device for controlling the AEA.

Navigation is performed by the AGS through integration of the equations of motion and substitution of instantaneous LM velocity for the variables. The AGS decodes the PGNS downlink data to establish LM and CSM position, velocity, and associated time computations. This information is used to initialize or update the AGS navigational computations upon command from the DEDA. The AGS solves the guidance problems of five distinct guidance routines: orbit insertion, coelliptic sequence initiate, constant delta (Δ) altitude, terminal phase initiate and change in LM velocity (external ΔV).

2.1.1.1.4 Pulse Torque Assembly.

The PTA supplies inputs to, and processes outputs from, the inertial components in the ISS.

2.1.1.1.5 Power and Servo Assembly.

The PSA contains power supplies for generation of internal power required by the PGNS, and servomechanisms and temperature control circuitry for the IMU.

2.1.1.1.6 Signal Conditioner Assembly.

The SCA provides an interface between the PGNS and the Instrumentation Subsystem (IS). The SCA preconditions PGNS measurements to a 0- to 5-volt d-c format before the signals are routed to the IS.

2.1.1.1.7 Alignment Optical Telescope. (See figure 2.1-4.)

The AOT, an L-shaped periscope, is used by the astronaut to take angular measurements of celestial objects. These angular measurements are required for orienting the platform during certain periods while the vehicle is in flight and during prelaunch preparations while on the lunar surface. Sightings taken with the AOT are transferred to the LGC by the astronaut, using the CCRD assembly. This assembly also controls the brightness of the telescope reticle pattern.

2.1.1.1.8 Computer Control and Reticle Dimmer Assembly. (See figure 2.1-5.)

The CCRD assembly is mounted on an AOT guard. The MARK X and MARK Y pushbuttons are used by the astronauts to send discrete signals to the LGC when star sightings are made. The REJECT pushbutton is used if an invalid mark has been sent to the LGC. A thumbwheel on the assembly adjusts the brightness of the telescope reticle lamps.

2.1.1.1.9 LM Guidance Computer.

The LGC is the central data-processing device of the GN&CS. The LGC, a control computer with many of the features of a general-purpose computer, processes data and issues discrete control signals for various subsystems. As a control computer, it aligns the IMU stable platform and provides RR antenna drive commands. The LGC also provides control commands to the LR and RR, the ascent and descent engines, the RCS thrusters, and the cabin displays. As a general-purpose computer, it solves guidance problems required for the mission. In addition, the LGC monitors the operation of the PGNS.

The LGC stores data pertinent to the ascent and descent flight profiles that the vehicle must assume to complete its mission. These data (position, velocity, and trajectory information) are used by the LGC to solve flight equations. The results of various equations are used to determine the required magnitude and direction of thrust. The LGC establishes corrections to be made. The vehicle engines are turned on at the correct time, and steering commands are controlled by the LGC to orient the vehicle to a new trajectory, if required. The ISS senses acceleration and supplies velocity changes, to the LGC, for calculating total velocity. Drive signals are supplied from the LGC to the CDU and stabilization gyros in the ISS to align the gimbal angles in the IMU. Position signals are supplied to the LGC to indicate attitude changes.

The LGC provides antenna-positioning signals to the RR and receives, from the RR channels of the CDU, antenna angle information. The LGC uses this information in the antenna-positioning calculations. During lunar-landing operations, star-sighting information is manually loaded into the LGC, using the DSKY. This information is used to calculate IMU alignment commands. The LGC and its programming help meet the functional requirements of the mission. The functions performed in the various mission phases include automatic and semiautomatic operations that are implemented mostly through the execution of the programs stored in the LGC memory.

The optical subsection (OSS) is used to determine the position of the vehicle using a catalog of stars stored in the computer and celestial measurements made by an astronaut. The identity of celestial objects is determined before earth launch. The AOT is used by the astronaut to take direct visual sightings and precise angular measurements of a pair of celestial objects. The computer subsection (CSS) uses this data, along with prestored data, to compute position and velocity and to align the inertial components. The OSS consists of the AOT and a computer control and reticle dimmer (CCRD) assembly.

The CSS, as the control and data-processing center of the vehicle, performs all the guidance and navigation functions necessary for automatic control of the flight path and attitude of the vehicle. For these functions, the GN&CS uses a digital computer. The computer is a control computer with many of the features of a general-purpose computer. As a control computer, it aligns the stable platform, and positions both radar antennas. It also provides control commands to both radars, the ascent engine, the descent engine, the RCS thrusters, and the vehicle cabin displays. As a general-purpose computer, it solves guidance problems required for the mission. The CSS consists of a LM guidance computer (LGC) and a display and keyboard (DSKY), which is a computer control panel.

2.1.1.1.1 Navigation Base.

The navigation base is a lightweight (approximately 3 pounds) mount that supports, in accurate alignment, the IMU, AOT, and an abort sensor assembly (ASA).

2.1.1.1.2 Inertial Measurement Unit.

The IMU is the primary inertial sensing device of the vehicle. It is a three-degree-of-freedom, stabilized device that maintains an orthogonal, inertially referenced coordinate system for vehicle attitude control and maintains three accelerometers in the reference coordinate system for accurate measurement of velocity changes. The IMU contains a stable platform, gyroscopes, and accelerometers necessary to establish the inertial reference.

The stable platform serves as the space-fixed reference for the ISS. It is supported by three gimbal rings (outer, middle, and inner) for complete freedom of motion. Three Apollo inertial reference integrating gyroscopes (IRIG's) sense attitude changes; they are mounted on the stable platform, mutually perpendicular. The gyros are fluid- and magnetically-suspended, single-degree-of-freedom types. They sense displacement of the stable platform and generate error signals proportional to displacement. Three pulse integrating pendulous accelerometers (PIPA's) (fluid- and magnetically-suspended devices) sense velocity changes.

2.1.1.1.3 Coupling Data Unit.

The CDU converts and transfers angular information between the GN&CS hardware. The unit is an electronic device that performs analog-to-digital and digital-to-analog conversion. The CDU processes the three attitude angles associated with the inertial reference and the two angles associated with the RR antenna. It consists of five almost identical channels: one each for the inner, middle, and outer gimbals of the IMU and one each for the RR shaft and trunnion gimbals.

The two channels used with the RR interface between the RR antenna and the LGC. The LGC calculates digital antenna position commands before acquisition of the CSM. These signals, converted to analog form by the CDU, are applied to the antenna drive mechanism to aim the antenna. Analog tracking-angle information, converted to digital form by the unit, is applied to the LGC.

The three channels used with the IMU provide interfaces between the IMU and the LGC and between the LGC and the AGS. Each of the three IMU gimbal angle resolvers provides its channel with analog gimbal-angle signals that represent vehicle attitude. The CDU converts these signals to digital form and applies them to the LGC. The LGC calculates attitude or translation commands and routes them through the CES to the proper thruster. The CDU converts attitude error signals to 800-cps analog signals and applies them to the flight director attitude indicator (FDAI). Coarse- and fine-alignment commands generated by the LGC are coupled to the IMU through the CDU.

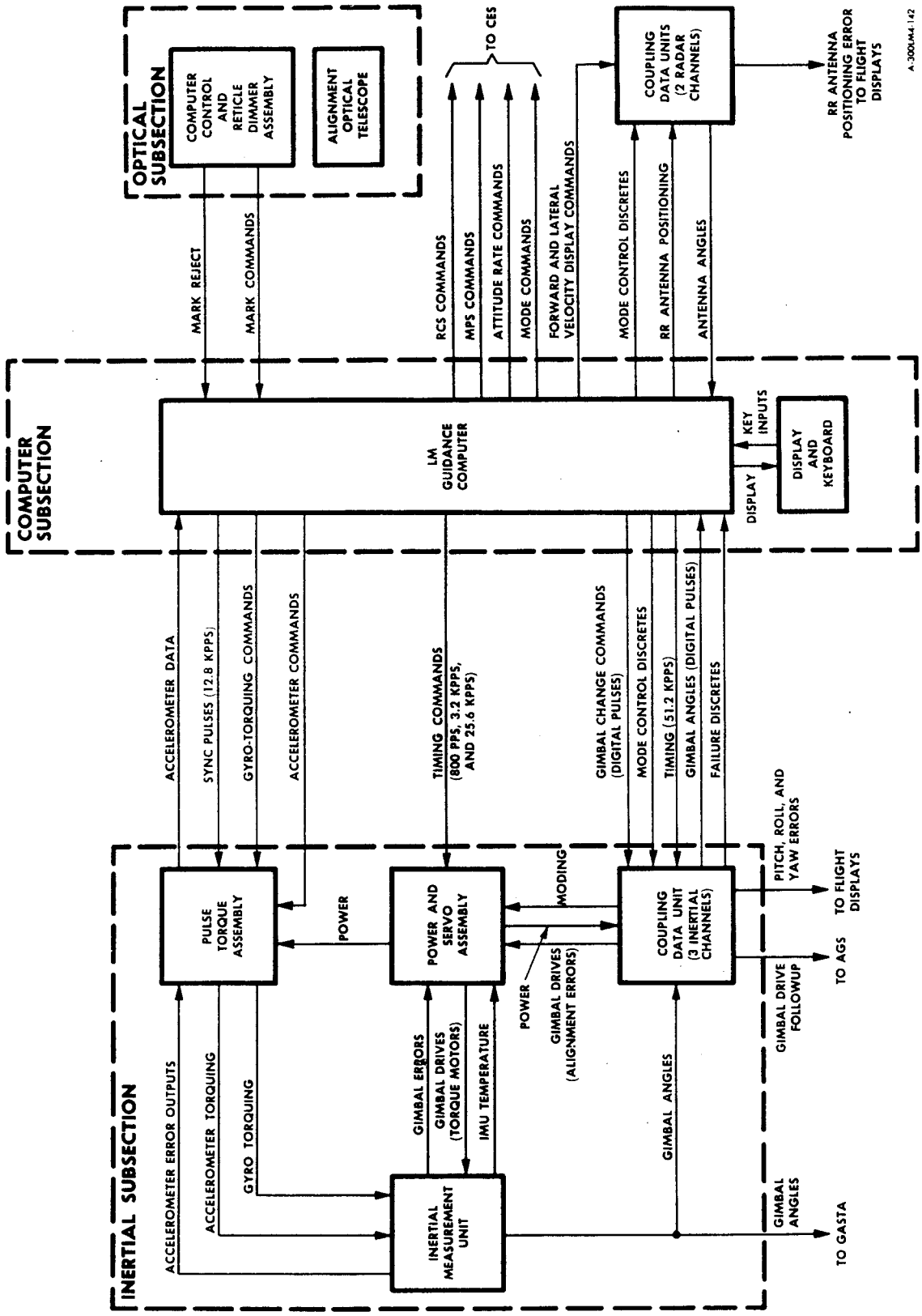

Figure 2.1-3. Primary Guidance and Navigation Section - Block Diagram

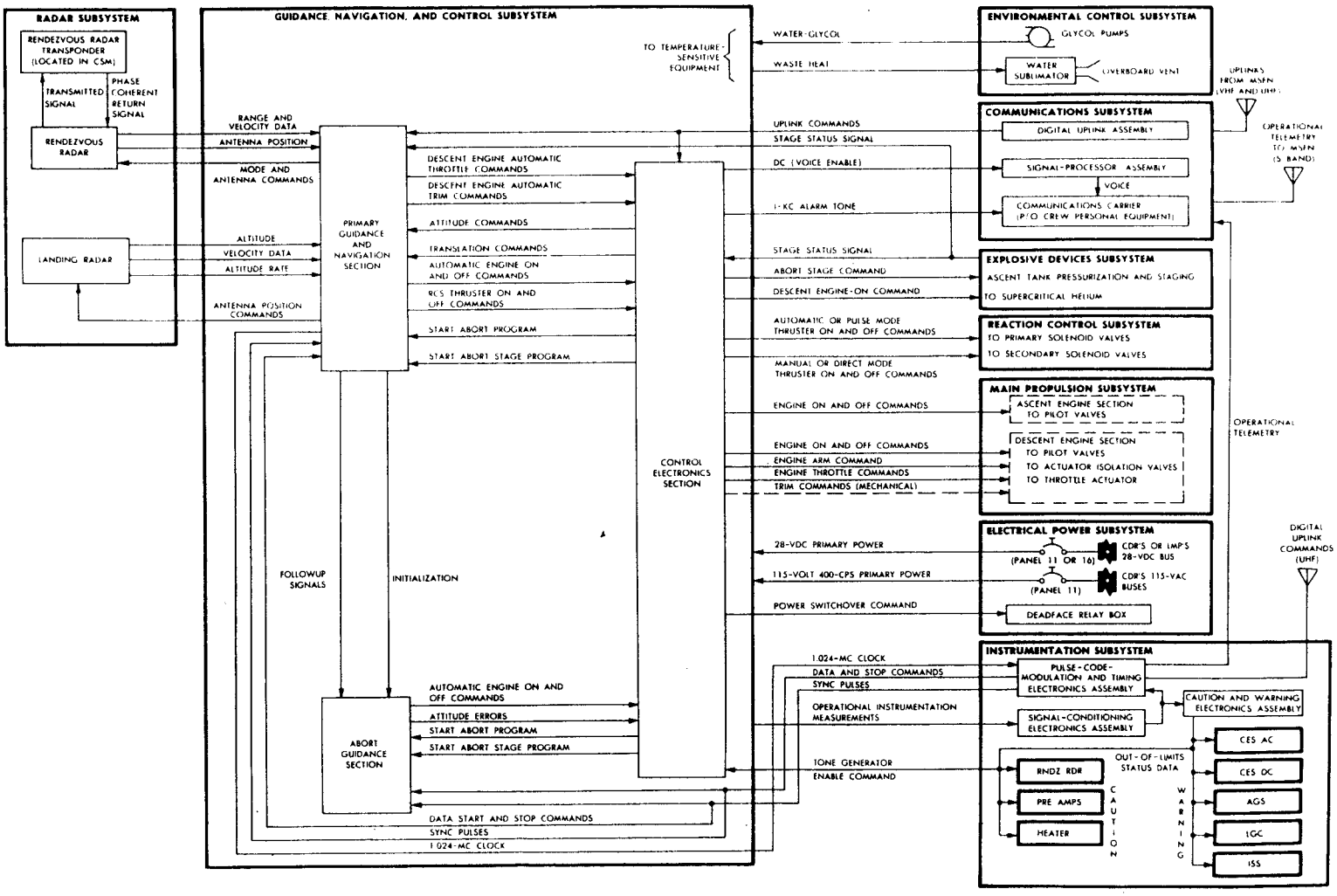

Figure 2.1-2. GN&CS Simplified Block Diagram and Subsystem Interfaces

The PGNS provides the navigational data required for vehicle guidance. These data include line-of-sight (LOS) data from an alignment optical telescope (AOT) for inertial reference alignment, signals for initializing and aligning the AGS, and data to the astronauts for determining the location of the computed landing site.

The AGS is primarily used only if the PGNS malfunctions. If the PGNS is functioning properly when a mission is aborted, it is used to control the vehicle. Should the PGNS fail, the lunar mission would have to be aborted; thus, the term "abort guidance section." Abort guidance provides only guidance to place the vehicle in a rendezvous trajectory with the CSM or in a parking orbit for CSM-active rendezvous. The navigation function is performed by the PGNS and the Radar Subsystem, but the navigation information also is supplied to the AGS. In case of a PGNS malfunction, the AGS uses the last navigation data provided to it. The astronaut can update the navigation data by manually inserting RR data into the AGS.

The AGS is used as backup for the PGNS during a vehicle mission abort. It determines the vehicle trajectory or trajectories required for rendezvous with the CSM and can guide the vehicle from any point in the mission, from separation to rendezvous and docking, including ascent from the lunar surface. It can provide data for attitude displays, make explicit guidance computations, and issue commands for firing and shutting down the engines. Guidance can be accomplished automatically, or manually by the astronauts, based on data from the AGS. When the AGS is used in conjunction with the CES, it functions as an analog autopilot.

The AGS is an inertial system that is rigidly strapped to the vehicle rather than mounted on a stabilized platform. Use of the strapped-down inertial system, rather than a gimbaled system, offers sufficient accuracy for lunar missions, with savings in size and weight. Another feature is that it can be updated manually with radar and optical aids.

The CES processes Reaction Control Subsystem (RCS) and Main Propulsion Subsystem (MPS) control signals for vehicle stabilization and control. To stabilize the vehicle during all phases of the mission, the CES provides signals that fire any combination of the 16 RCS thrusters. These signals control attitude and translation about or along all axes. The attitude and translation control data inputs originate from the PGNS during normal automatic operation, from two hand controllers during manual operations, or from the AGS during certain abort situations.

The CES also processes on and off commands for the ascent and descent engines and routes automatic and manual throttle commands to the descent engine. Trim control of the gimbaled descent engine is also provided to assure that the thrust vector operates through the vehicle center of gravity.

These integrated sections (PGNS, AGS, and CES) allow the astronauts to operate the vehicle in fully automatic, several semiautomatic, and manual control modes.

2.1.1.1 Primary Guidance and Navigation Section.

The PGNS includes three major subsections: inertial, optical, and computer. (See figure 2.1-3.) Individually or in combination they perform all the functions mentioned previously.

The inertial subsection (ISS) establishes the inertial reference frame that is used as the central coordinate system from which all measurements and computations are made. The ISS measures attitude and incremental velocity changes, and assists in converting data for computer use, onboard display, or telemetry. Operation is started automatically by a guidance computer or by an astronaut using the computer keyboard. Once the ISS is energized and aligned to the inertial reference, any vehicle rotation (attitude change) is sensed by a stable platform. All inertial measurements (velocity and attitude) are with respect to the stable platform. These data are used by the computer in determining solutions to the guidance problems. The ISS consists of a navigation base, an inertial measurement unit (IMU), a coupling data unit (CDU), pulse torque assembly (PTA), power and servo assembly (PSA), and signal conditioner assembly (SCA).

GN&

2.1 GUIDANCE, NAVIGATION, AND CONTROL SUBSYSTEM.

2.1.1 INTRODUCTION.

The primary function of the Guidance, Navigation, and Control Subsystem (GN&CS) is accumulation, analysis, and processing of data to ensure that the vehicle follows a predetermined flight plan. The GN&CS provides navigation, guidance, and flight control to accomplish the specific guidance goal. To accomplish guidance, navigation, and control, the astronauts use controls and indicators that interface with the various GN&CS equipment. (See figure 2.1-1.) Functionally, this equipment is contained in a primary guidance and navigation section (PGNS), an abort guidance section (AGS), and a control electronics section (CES). (See figure 2.1-2.)

The PGNS provides the primary means for implementing inertial guidance and optical navigation for the vehicle. When aided by either the rendezvous radar (RR) or the landing radar (LR), the PGNS provides for radar navigation. The PGNS, when used in conjunction with the CES, provides automatic flight control. The astronauts can supplement or override automatic control, with manual inputs.

The PGNS acts as a digital autopilot in controlling the vehicle throughout the mission. Normal guidance requirements include transferring the vehicle from a lunar orbit to its descent profile, achieving a successful landing at a preselected or crew-selected site, and performing a powered ascent maneuver that results in terminal rendezvous with the CSM.

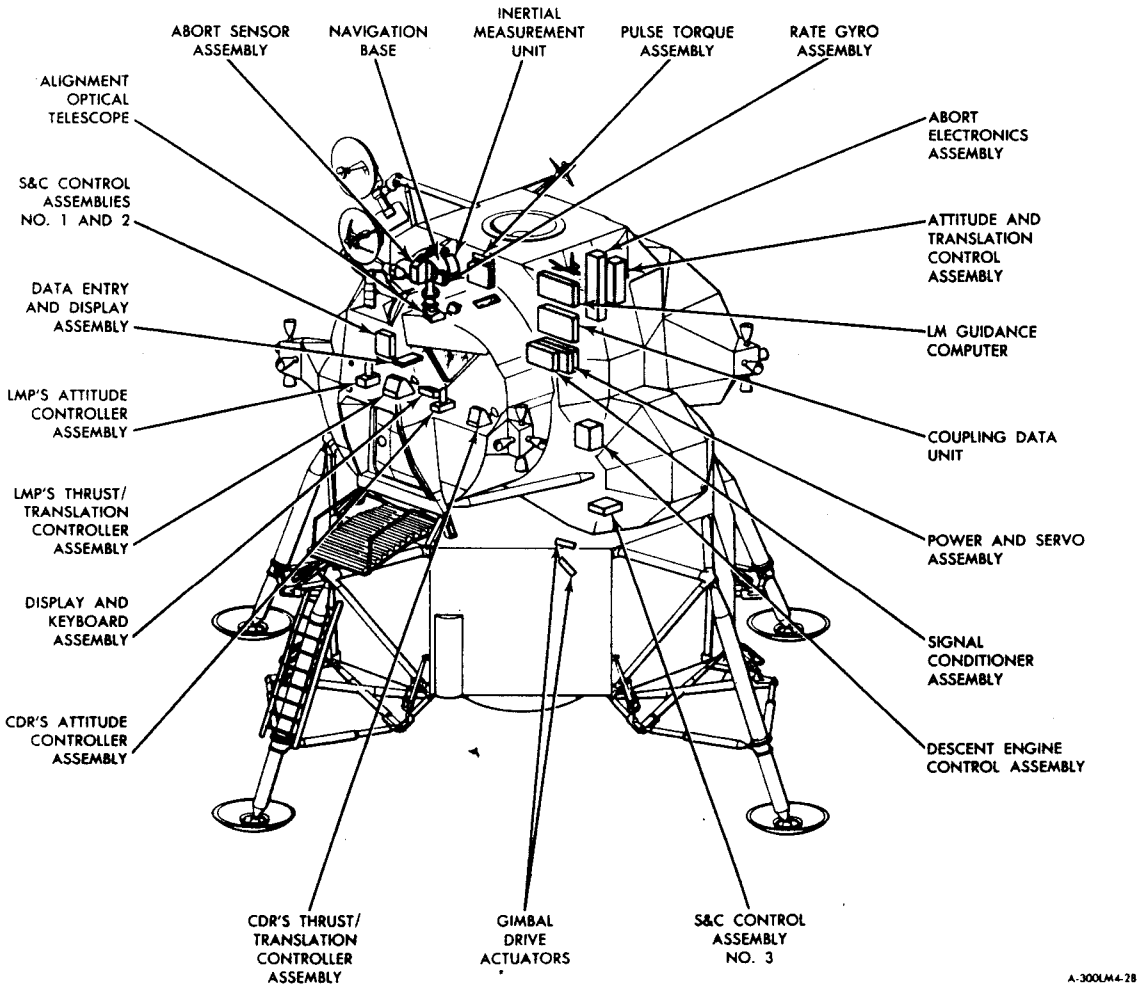

Figure 2.1-1. GN&CS - Major Component Location

Priority Control. The priority control establishes a processing priority for operations that are performed by the LGC. Priority control is related to the sequence generator in that it controls the instructions to the LGC. The priority control processes input-output information and issues order code and instruction signals to the sequence generator and a 12-bit addresses to the central processor.

The priority control consists of start, interrupt, and counter instruction control circuits. The start instruction control circuit initializes the LGC if the program works itself into a trap, if a transient power failure occurs, or if the interrupt instruction control is not functioning properly. The LGC is initialized with the start order code signal, which not only commands the sequence generator to execute the start instruction, but resets other circuits. When the start order code signal is being used, issued, a stop signal is sent to the timer. This signal stops the time pulse generator until all essential circuits have been reset and the start instruction has been initiated by the sequence generator.

The interrupt instruction control forces execution of the interrupt instruction by sending the interrupt order code signal to the sequence generator, and the 12-bit address to the central processor. There are 10 addresses, each of which accounts for a particular function that is regulated by the interrupt instruction control. The interrupt instruction control links the DSKY, telemetry, and time counters to the program. The interrupt addresses are transferred to the central processor by read control pulses from the sequence generator. The input-output circuits are the source of the DSKY, telemetry, and time counter inputs. The interrupt instruction control has a built-in priority chain which allows sequential control of the 10 interrupt addresses. The decoded addresses from the central processor control the priority operation.

The counter instruction control is similar to the interrupt instruction control in that it units input-output functions to the program. It also supplies 12-bit addresses to the central processor and instruction signals to the sequence generator. The instruction signals cause a delay (not a interruption) in the program by forcing the sequence generator to execute a counter instruction. The addresses are transferred to the central processor by read control pulses. The counter instruction control also has a built-in priority of the 29 addresses it can supply to the central processor. The priority is also controlled by decoded counter address signals from the central processor. The counter instruction control contains an alarm detector, which produces an alarm if an incremental pulse is not processed properly.

Input-Output Interfaces. The input interface receives signals from the PGNS and other sources. (Refer to table 2.1-3.) These signals are conditioned and isolated by the input interface before they are routed into the LGC logic circuitry. The output interface conditions and isolates the LGC output signals before routing them to their assigned destinations. The input and output circuits of the LGC include storage and gating devices, which are referred to as input-output channels.

Most input and output channels are flip-flop registers. Certain discrete inputs are applied to individual gating circuits, which are part of the input channel structure. Input data are applied directly to the input channels; there is no write process as in the central processor. However, the data are read out to the central processor under program control. The input logic circuits accept inputs that cause interrupt sequences within the LGC. These incremental inputs (acceleration data from the PIPA's, etc) are applied to the priority control circuits and, subsequently to associated counters in erasable memory.

Outputs from the LGC are placed in the output channels and are routed to specific systems through the output interface circuits. The operation is identical with that in the central processor. Data are written into an output channel from the write lines and read out to the interface circuits under program control. The downlink word is also loaded into an output channel and routed to the IS by the downlink circuits. The output timing logic gates synchronization pulses (fixed outputs) to the PGNS. These are continuous outputs, since the logic is specifically powered during normal operation of the LGC and during standby.

Channel No. 1. This channel is the L-register of the LGC.

Channel No. 2. This channel is the quotient (Q) register of the LGC.

Channel No. 3. This channel is the high-order scaler. The channel furnishes a 14-bit positive number whose least significant bit has a weight of 5.12 seconds. The maximum content of the register is 23.3 hours.

Priority Control. The priority control establishes a processing priority for operations that are performed by the LGC. Priority control is related to the sequence generator in that it controls the instructions to the LGC. The priority control processes input-output information and issues order code and instruction signals to the sequence generator and a 12-bit addresses to the central processor.

The priority control consists of start, interrupt, and counter instruction control circuits. The start instruction control circuit initializes the LGC if the program works itself into a trap, if a transient power failure occurs, or if the interrupt instruction control is not functioning properly. The LGC is initialized with the start order code signal, which not only commands the sequence generator to execute the start instruction, but resets other circuits. When the start order code signal is being used, issued, a stop signal is sent to the timer. This signal stops the time pulse generator until all essential circuits have been reset and the start instruction has been initiated by the sequence generator.

The interrupt instruction control forces execution of the interrupt instruction by sending the interrupt order code signal to the sequence generator, and the 12-bit address to the central processor. There are 10 addresses, each of which accounts for a particular function that is regulated by the interrupt instruction control. The interrupt instruction control links the DSKY, telemetry, and time counters to the program. The interrupt addresses are transferred to the central processor by read control pulses from the sequence generator. The input-output circuits are the source of the DSKY, telemetry, and time counter inputs. The interrupt instruction control has a built-in priority chain which allows sequential control of the 10 interrupt addresses. The decoded addresses from the central processor control the priority operation.

The counter instruction control is similar to the interrupt instruction control in that it units input-output functions to the program. It also supplies 12-bit addresses to the central processor and instruction signals to the sequence generator. The instruction signals cause a delay (not a interruption) in the program by forcing the sequence generator to execute a counter instruction. The addresses are transferred to the central processor by read control pulses. The counter instruction control also has a built-in priority of the 29 addresses it can supply to the central processor. The priority is also controlled by decoded counter address signals from the central processor. The counter instruction control contains an alarm detector, which produces an alarm if an incremental pulse is not processed properly.

Input-Output Interfaces. The input interface receives signals from the PGNS and other sources. (Refer to table 2.1-3.) These signals are conditioned and isolated by the input interface before they are routed into the LGC logic circuitry. The output interface conditions and isolates the LGC output signals before routing them to their assigned destinations. The input and output circuits of the LGC include storage and gating devices, which are referred to as input-output channels.

Most input and output channels are flip-flop registers. Certain discrete inputs are applied to individual gating circuits, which are part of the input channel structure. Input data are applied directly to the input channels; there is no write process as in the central processor. However, the data are read out to the central processor under program control. The input logic circuits accept inputs that cause interrupt sequences within the LGC. These incremental inputs (acceleration data from the PIPA's, etc) are applied to the priority control circuits and, subsequently to associated counters in erasable memory.

Outputs from the LGC are placed in the output channels and are routed to specific systems through the output interface circuits. The operation is identical with that in the central processor. Data are written into an output channel from the write lines and read out to the interface circuits under program control. The downlink word is also loaded into an output channel and routed to the IS by the downlink circuits. The output timing logic gates synchronization pulses (fixed outputs) to the PGNS. These are continuous outputs, since the logic is specifically powered during normal operation of the LGC and during standby.

Channel No. 1. This channel is the L-register of the LGC.

Channel No. 2. This channel is the quotient (Q) register of the LGC.

Channel No. 3. This channel is the high-order scaler. The channel furnishes a 14-bit positive number whose least significant bit has a weight of 5.12 seconds. The maximum content of the register is 23.3 hours.

processor, where it is decoded and processed. A number of key codes are required to specify an address or a data word. The program initiated by a key code also converts the information from the DSKY keyboard to a coded display format. The coded display format is transferred by another program to an output channel of the LGC and sent to the DSKY for display. The display is a visual indication that the key code was properly received, decoded, and processed by the LGC.

Timer. The timer generates the timing signals required for operation of the LGC. It is the primary source of timing signals for all subsystems.

The master clock frequency, generated by an oscillator, is applied to a clock divider logic circuit. The clock divider logic divides the master clock frequency into gating and timing pulses at the basic clock rate of the LGC (1,024 kpps). This basic clock rate is also applied to a scaler and a time pulse generator. The scaler further divides the output of the clock divider logic into pulses and signals which are used for gating, for generating rate signal outputs, and for accumulating time. The time pulse generator produces a recurring set of time pulses which define a specific memory cycle during which access to memory and data flow take place within the LGC.

Sequence Generator. The sequence generator executes the instructions stored in memory, processes instruction codes and produces control pulses that regulate data flow of the LGC. The control pulses control the operations assigned to each instruction and the data stored in memory.

The sequence generator consists of an order code processor, a command generator, and a control pulse generator. The sequence generator receives order code signals from the central processor and priority control. These signals are coded by the order code processor and supplied to the command generator. Another set of control pulses are used for gating the order code signals into the sequence generator at the end of each instruction. The command generator decodes the input signals and produces instruction commands which are supplied to the control pulse generator.

The control pulse generator receives 12 time pulses from the timer. These pulses occur in cycles and are used for producing control pulses in conjunction with the instruction commands. There are five types of control pulses: read, write, test, direct exchange, and special purpose. Information in the central processor is transferred from one register to another by the read, write, and direct exchange control pulses. The special purpose control pulses regulate the operation of the order code processor. The test control pulses are used within the control pulse generator. Branch test data from the central processor change the control pulse sequence of various functions.

Central Processor. The central processor performs all arithmetic operations required of the LGC, buffers all information coming from and going to memory, checks for correct parity on all words coming from memory, and generates a parity bit for all words written into memory. The central processor consists of flip-flop registers; write, clear, and read control logic; write amplifiers; a memory buffer register; a memory address register; a decoder; and parity logic.

Primarily, the central processor performs operations dictated by the basic instructions of the program stored in memory. Communication within the central processor is accomplished through write amplifiers. Data flow to or from memory to the registers, between individual registers, or into the central processor from external sources. Data are placed on the write lines and are routed to a specific register or to another part of the central processor under control of the write, clear, and read logic. This logic accepts control pulses from the sequence generator and generates signals to read the contents of a register onto the write lines and to write the contents into another register of the central processor or another area of the LGC. The particular memory location is specified by the contents of the memory address register. The address is fed from the write lines into this register, the output of which is decoded by the address decoder logic. Data are subsequently transferred from memory to the memory buffer register. The decoded address outputs are also used as gating functions within the LGC.

External inputs through the write amplifiers include the contents of the erasable and fixed memory bank registers, all interrupt addresses from priority control, control pulses associated with specific arithmetic operations, and the start address for an initial start condition. Information from the input and output channels is placed on the write lines and routed to specific destinations within or external to, the central processor.

The time 6, 5, 3, and 4 interrupt conditions are internal interrupts initiated by the LGC. The first key interrupt is initiated when a DSKY pushbutton is pressed. A mark signal, indicating a sighting, initiates the second key interrupt. The uplink interrupt indicates completion of an uplink word. The radar interrupt is generated when a complete radar work is received. As the ACA is moved out of detent the hand controller interrupt is initiated.

Before a priority program can be executed, the current program must be interrupted. The contents of the program counter and any intermediate results contained in the central processor should be preserved. The priority control produces an interrupt request signal, which is sent to the sequence generator. The signal, acting as an order code, executes as instruction that transfers the contents of the program counter and any intermediate results to memory. The interrupt request signal also transfers the priority program address from priority control to the central processor and, then, to memory through the write lines. As a result, the first basic instruction word of the priority program is entered into the central processor, from memory, and execution of the priority program begins. The last instruction of each priority program restores the LGC to normal operation, provided no other interrupt request is present, by transferring the previous contents of the program counter and intermediate results from their storage locations in memory back to the central processor.

Data pertaining to the flight, which include real time, acceleration, and IMU gimbal angles, are stored in memory locations called counters. The counters are updated as soon as new data becomes available. Data inputs to priority control are called incremental pulses. Each incremental pulse produces a counter address and a priority request. The priority request signal is sent to the sequence generator as an order code. The control pulses produced by the sequence generator transfer the counter address to memory through the write lines of the central processor. The control pulses also enter the contents of the addressed counter into the central processor.

Real time, which is used in solving guidance and navigation problems, is maintained within the LGC, in the main time counter of memory. The main time counter provides a 745.65-hour (approximately 31 days) clock. Incremental pulses are produced in the timer and sent to priority control to increase the main time counter. The LGC clock is synchronized with ground elapsed time (GET) which is "time zero" at launch. The LGC time is transmitted once every second by downlink operation for comparison with the GET of MSFN.

Incremental transmissions occur in the form of pulse bursts from the output channels to the CDU, the gyro fine alignment electronics, and the radars. The number of pulses and the time at which they occur are controlled by the LGC program. Discrete outputs originate in the output channels under program control. These outputs are sent to DSKY and other subsystems. A continuous pulse train at 1.024 mc originates in the timing output logic and set as a synchronization signal to the timing electronics assembly in the IS.

The uplink word from MSFN via the digital uplink assembly (DUA) is supplied as an incremental pulse to priority control. As this word is received, priority control produces the address of the uplink counter in memory and requests the sequence generator to execute the instructions that perform the serial-to-parallel conversion of the input word. When the conversion is completed, the parallel word is transferred to a storage location in memory by the uplink priority program. The uplink priority program also retains the parallel word for subsequent downlink transmission. Another program converts the parallel word to a coded display format and transfers the display information to the DSKY.

The downlink operation of the LGC is asynchronous with respect to the IS. The IS supplies all the timing signals necessary for the downlink operation. (Refer to paragraph 2.1.2 for interface discussion.)

Through the DSKY, the astronaut can load information into the LGC, retrieve and display information contained in the LGC, and initiate any program stored in memory. A key code is assigned to each keyboard pushbutton. When a DSKY pushbutton is pressed, the key code is produced and sent to an input channel of the LGC. A signal is also sent to priority control, where the signal produces the address of a priority program stored in memory and a priority request signal. The priority request signal is sent to the sequence generator. This results in an order code and initiates an instruction for interrupting the program in progress and for executing the key interrupt No. 1 priority program stored in memory. This program transfers the key code temporarily stored in an input channel, to the central

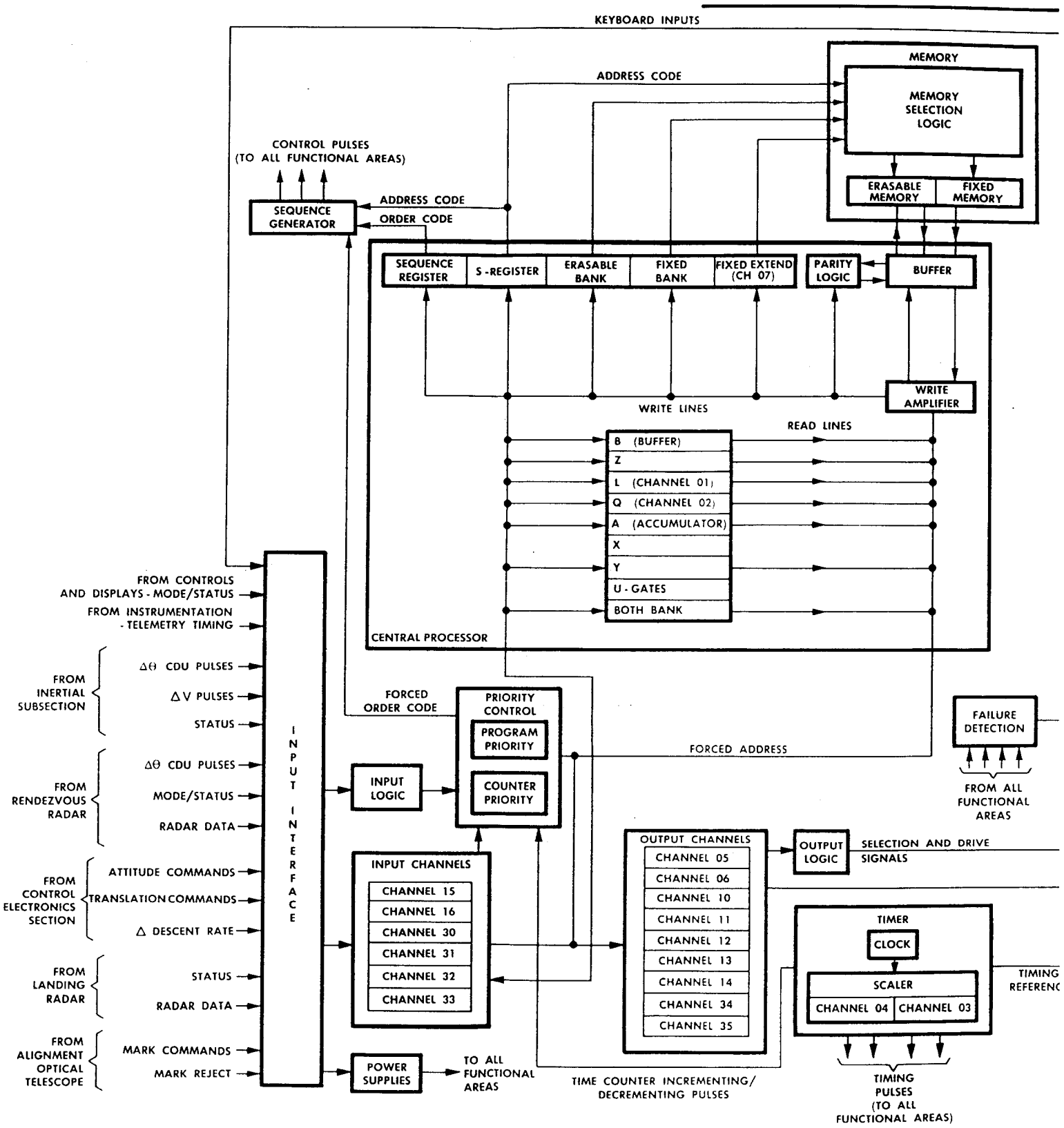

Figure 2.2-51. LM Gu

GN

flight data that are displayed to assist the astronaut during various phases of the mission are as follows: total LM attitude, attitude errors, altitude and altitude rate, forward and lateral velocities, and percentage of descent engine thrust commanded by the LGC.

Total attitude is generated from the IMU gimbal angles. With the ATTITUDE MON switch (panel 1) set to PGNS, the IMU gimbal angles are routed to the gimbal angle sequencing transformation assembly (GASTA). The GASTA transforms the gimbal angles into signals of the proper configuration of total attitude. The total attitude signals are applied to the FDAI sphere for direct astronaut readout. The FDAI also displays roll, pitch, and yaw rates and errors. The FDAI rate indicators monitor the rate of change of angular position. When the RATE/ERR MON switch (panel 1) is set to LDG RDR/CMPTR, the FDAI error indicators indicate the deviation between the programmed and actual attitude. The FDAI rate indicators are fed from the CES rate gyros; the pitch, yaw, and roll attitude errors are supplied from the LGC through the CDU.

The astronauts can select the LR, PGNS, or AGS as the source for the altitude and altitude-rate parameters. When the MODE SEL switch is set to PGNS, the LGC calculates altitude and altitude rate, but issues signals for display of either altitude or altitude rate. Altitude and altitude rate are not displayed simultaneously. These signals are routed through the RNG/ALT MON switch (panel 1) to the ALT and ALT RATE indicators (panel 1).

Forward and lateral velocities are displayed on the X-pointer indicator. The indicator receives velocity signals from the LGC via the CDU when the MODE SEL switch is set to PGNS. The LGC calculates the velocities from its stored information and from information received from the LR. The LGC feeds the calculated data to the CDU for digital-to-analog conversion before display. The X-POINTER SCALE switch (panel 3) selects the scale of the indicator. The type of velocity and the scale selected are indicated by illuminated placarding on the borders of the X-pointer indicator.

The amount of descent engine throttling, as commanded by the LGC, is routed to the CES. The CES sends this command to the THRUST indicator (panel 1) and to the descent engine. The THRUST indicator also displays the amount of thrust sensed at the engine thrust chamber, so that a comparison can be made.

PGNS vehicle control includes interfacing for attitude and translation control and for propulsion control (descent and ascent engine). Commands from the LGC are routed through the CES to the RCS thrusters and to the ascent and descent engines for proper flight control.

2.1.3.4 General Operation of Abort Guidance Section. (See figure 2.1-16.)

Control of the LM by the AGS depends on the settings of various cabin switches and on DEDA entries. Attitude control, using the RCS, must be under mode control [ROLL, PITCH, and YAW ATTITUDE CONTROL switches (panel 3) set to MODE CONT.]

For the AGS to effect guidance steering (not merely attitude hold) and engine control, the GUID CONT switch must be set to AGS and the MODE CONTROL: AGS switch must be set to AUTO. For nominal DPS operation, the ENG ARM switch is set to DES and the engine START pushbutton is pressed. For abort DPS operation, the ABORT pushbutton (panel 1) is pressed to arm the descent engine. Ascent engine operation is similar to descent engine operation, except that the ENG ARM switch is set to ASC. For APS operation in abort situations, with the descent stage attached, the ABORT STAGE pushbutton (panel 1) is pressed to arm the ascent engine.

The MODE SEL, ATTITUDE MON, and RATE/ERR MON switches (panels 1 and 2) are used to monitor AGS maneuvers. When these switches are set as indicated in figure 2.1-16, the FDAI's X-pointer indicators, and the ALT and ALT RATE indicators display the information required to monitor AGS operations.

The AGS STATUS switch (panel 6) provides power to the AGS when the AC BUS B: AGS and STAB/CONT: ASA and AEA circuit breakers are closed. With the AGS STATUS switch set to OFF, closing the ASA circuit breaker causes the ASA to be in a temperature-controlled condition. Closing the AEA circuit breaker causes power to be applied to the AEA. Closing the AGS circuit breaker applies 15-volt (rms), 400-cps power to the AGS power supply.

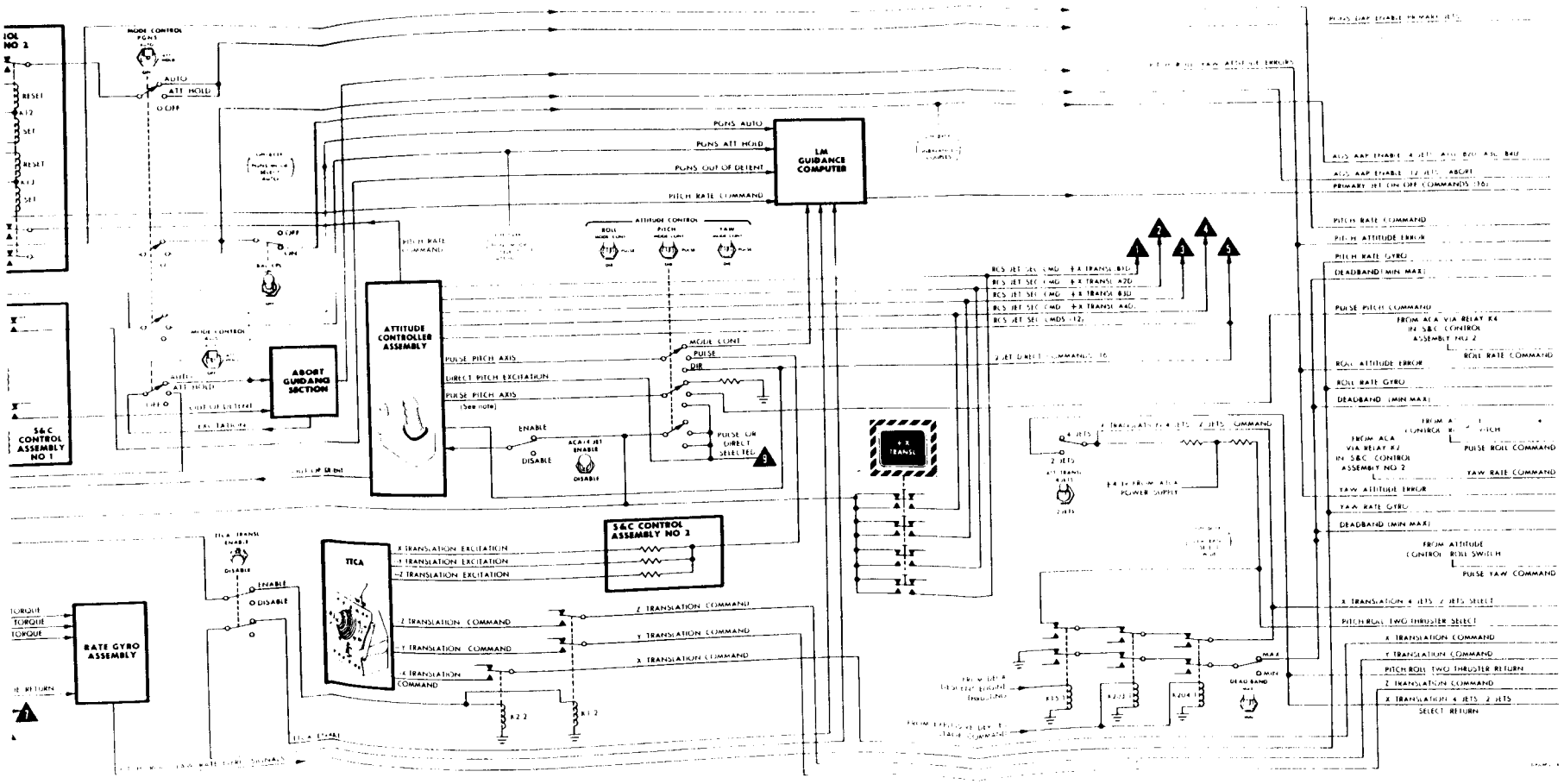

Figure 2.1-17. A[illegible] Translation Control Schematic (Sheet 1 of 2)

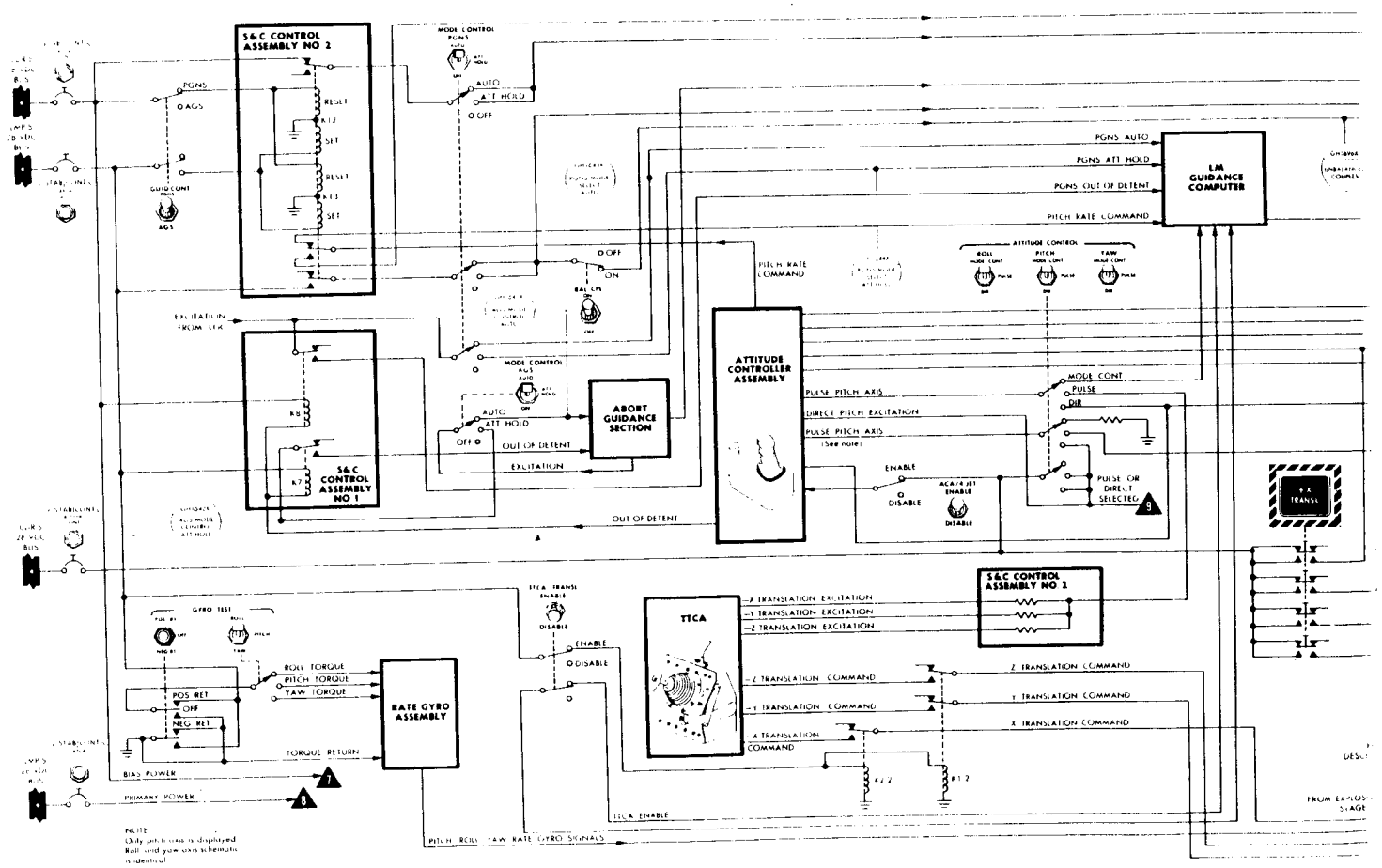
S&C CONTROL ASSEMBLY NO 2
MODE CONTROL PGNS
AUTO
ATT HOLD
OFF
PGNS
AGS
GUIDCONT
RESET
K12
SET
RESET
K13
SET
OFF
ON
BAL CPL
EXCITATION FROM LEM
K8
K7
S&C CONTROL ASSEMBLY NO 1
MODE CONTROL AGS
AUTO
ATT HOLD
OFF
OUT OF DETENT
EXCITATION
ABORT GUIDANCE SECTION
OUT OF DETENT
PITCH RATE COMMAND
ATTITUDE CONTROLLER ASSEMBLY
PGNS AUTO
PGNS ATT HOLD
PGNS OUT OF DETENT
PITCH RATE COMMAND
LM GUIDANCE COMPUTER
ATTITUDE CONTROL
ROLL
PITCH
YAW
MODE CONT
PULSE
DIR
PULSE PITCH AXIS
DIRECT PITCH EXCITATION
PULSE PITCH AXIS
(See note)
ENABLE
DISABLE
ACA/RCS JET ENABLE
DISABLE
PULSE OR DIRECT SELECTED
9
+X TRANSL
GYRO TEST
ROLL
PITCH
YAW
POS RET
OFF
NEG RET
ROLL TORQUE
PITCH TORQUE
YAW TORQUE
RATE GYRO ASSEMBLY
TORQUE RETURN
BIAS POWER
PRIMARY POWER
7
8
TTCA TRANSL ENABLE
DISABLE
ENABLE
DISABLE
TTCA
-X TRANSLATION EXCITATION
-Y TRANSLATION EXCITATION
-Z TRANSLATION EXCITATION
S&C CONTROL ASSEMBLY NO 2
-Z TRANSLATION COMMAND
-Y TRANSLATION COMMAND
-X TRANSLATION COMMAND
Z TRANSLATION COMMAND
Y TRANSLATION COMMAND
X TRANSLATION COMMAND
K12
K13
TTCA ENABLE
PITCH ROLL YAW RATE GYRO SIGNALS
FROM EXPLOS STAGE
NOTE
Only pitch axis is displayed
Roll and yaw axis schematic
is identical

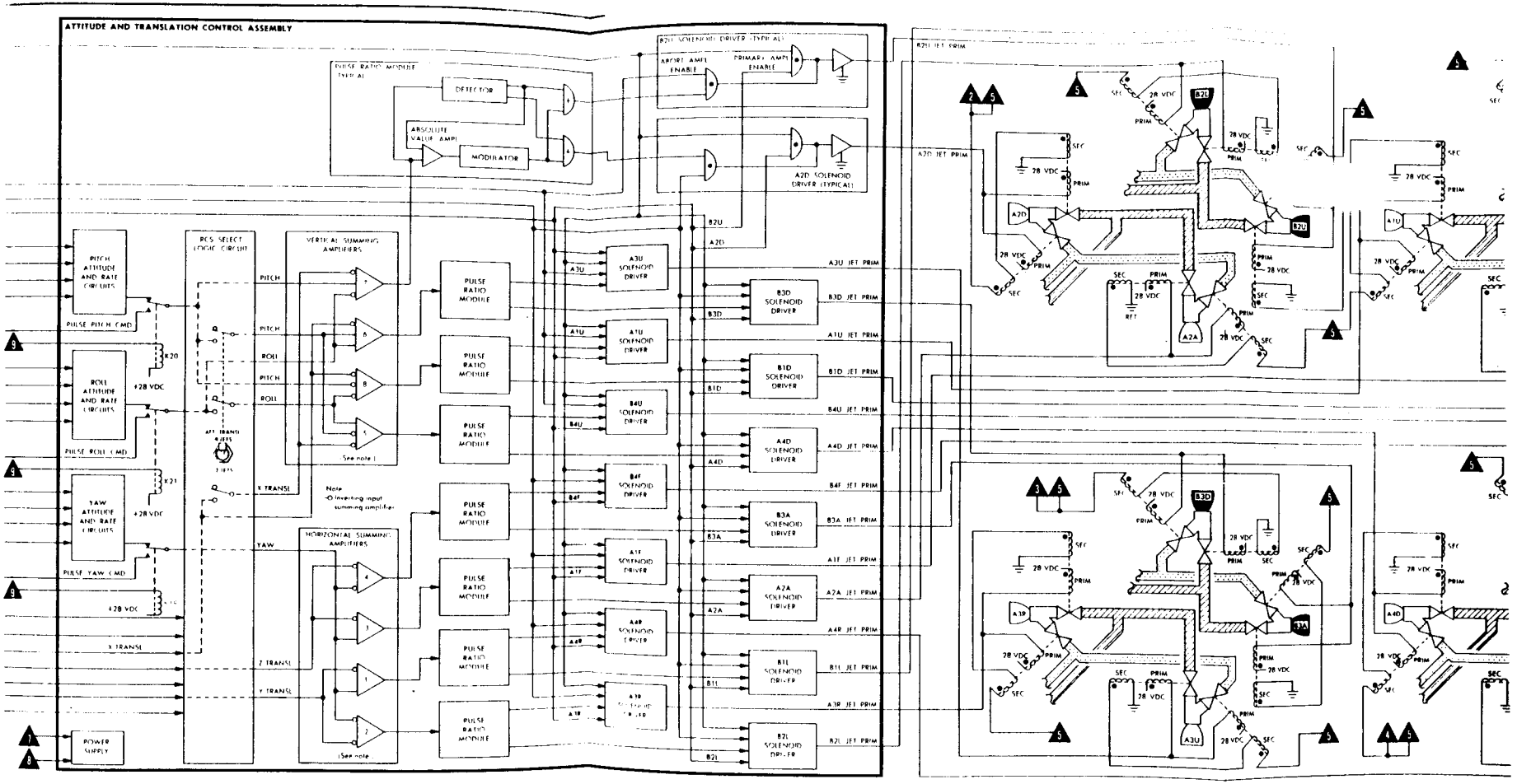

Figure 2.1-17. Attitude and Translation Control Schematic (Sheet 2 of 2)

OOK

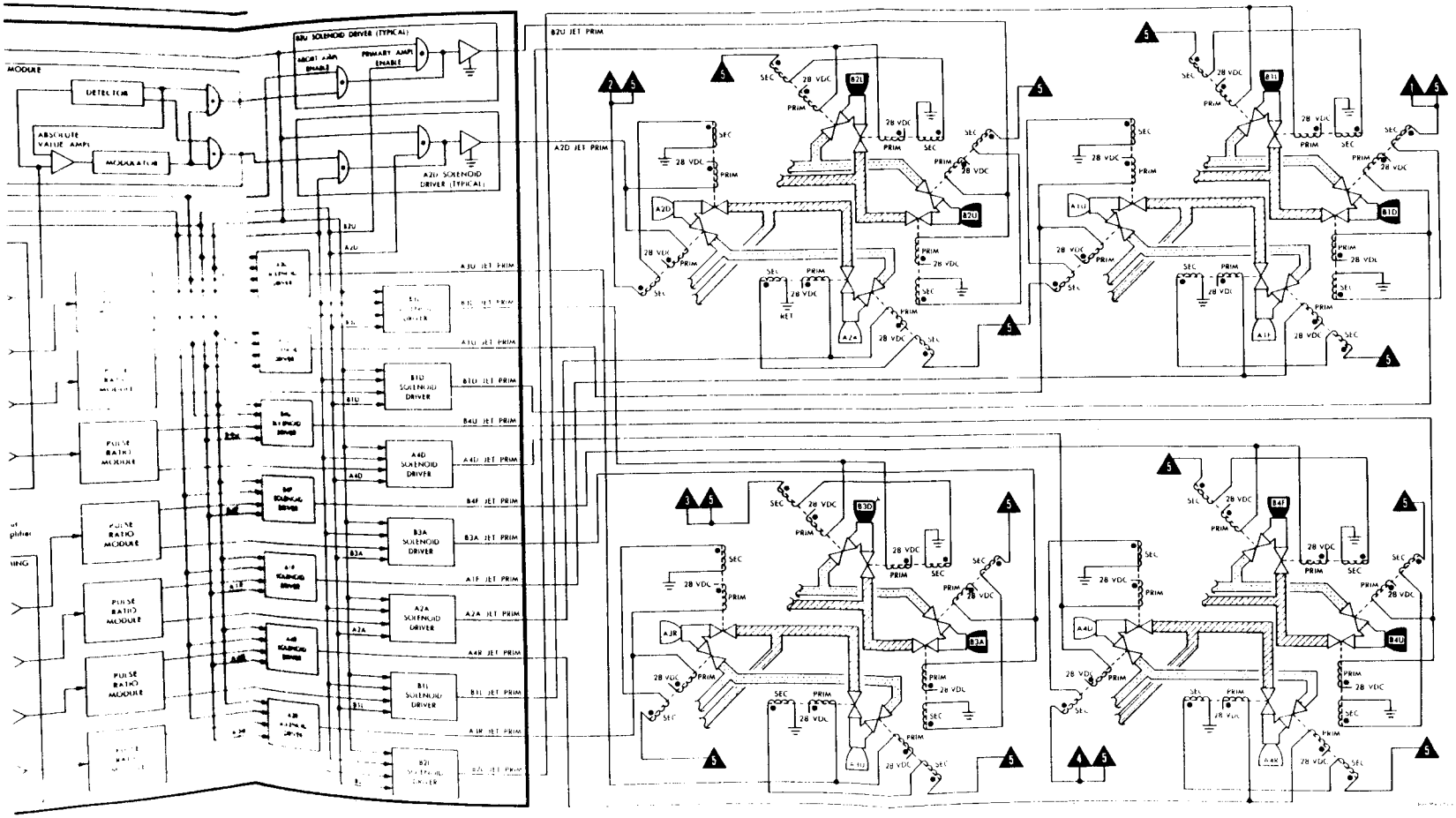
MODULE
DETECTOR
ABSOLUTE VALUE AMPL
MODULATOR
PULSE RATIO MODULE
B2U SOLENOID DRIVER (TYPICAL)
PRIMARY AMPL ENABLE
A2D SOLENOID DRIVER (TYPICAL)
B2U
A2D
A3U JET PRIM
B1L JET PRIM
A1U JET PRIM
B1U SOLENOID DRIVER
B1U JET PRIM
B4U JET PRIM
A4D SOLENOID DRIVER
A4D JET PRIM
B4F JET PRIM
B3A SOLENOID DRIVER
B3A JET PRIM
A1F JET PRIM
A2A SOLENOID DRIVER
A2A JET PRIM
A4R JET PRIM
B1L SOLENOID DRIVER
B1L JET PRIM
A1R JET PRIM
B2L JET PRIM
B2U JET PRIM
A2D JET PRIM
28 VDC
SEC
PRIM
RET

GN&

2.1.3.5.2 Translation Control. (See figure 2.1-17.)

Automatic and manual translation control are available in all three axes, using the RCS. Automatic control consists of thruster commands from the LGC to the jet drivers in the ATCA. These commands are used for translations of small velocity increments and for ullage settling before ascent or descent engine ignition after coasting phases. Manual control in the primary guidance mode consists of on and off commands from a TTCA, through the LGC, to the primary preamplifiers. In the abort guidance mode, only manual control is available. Control consists of on and off commands from a TTCA to the jet selected logic in the ATCA. The voltage is sufficient to saturate the PRM's and provide control of the thrusters. RCS thrust (+X-axis) is available when the +X TRANSL pushbutton is pressed. The secondary solenoids of the four downward-firing thrusters (B1D, A2D, B3D, A4D) are energized as long as the +X TRANSL pushbutton is pressed.

2.1.3.5.3 Descent Engine Control. (See figure 2.1-18.)

Descent engine control accomplishes major changes in LM velocity.

Ignition and Shutdown. Descent engine ignition is controlled by the PGNS and the astronaut through the CES. Before ignition, the engine must be armed by setting the ENG ARM switch (panel 1) to DES. This action sends an engine arm discrete to the LGC and to the S&C control assemblies. Engine-on commands from the LGC or AGS are routed to the DECA through the S&C control assemblies. When it receives the engine arm and start discretes from the S&C control assemblies, the DECA commands the descent engine on. The engine remains on until an engine-off discrete is initiated with either stop pushbutton (panels 5 and 6). An engine-off discrete is generated when the ΔV reaches a predetermined value. The astronauts can command the engine on or off, using the engine START (panel 5) and stop pushbuttons.

Throttle Control. Descent engine throttle (thrust) can be controlled by the PGNS and/or the astronauts. Automatic throttle (increase/decrease) signals from the LGC are sent to the DECA. The analog output of the DECA controls descent engine thrust from 10% to maximum thrust (92.5%). In the automatic mode (THR CONT switch set to AUTO), the astronauts can use the TTCA's to increase descent engine thrust. When the THR CONT switch is set to MAN, the astronaut has complete control over descent engine thrust. If a TTCA is used for throttle control, X-axis translation capability is disabled.

Trim Control. Descent engine trim is automatically controlled during the primary guidance and abort guidance modes, to compensate for center-of-gravity offsets during descent engine operation. In the primary guidance mode, the LGC routes trim on and off signals in two directions, for each gimbal axis, to the DECA. These signals operate power control circuitry, which drives the GDA's. In the abort guidance mode, Y- and Z-axis signals that drive the GDA's are routed from the ATCA to the DECA. The GDA's tilt the descent engine along the Y-axis and Z-axis a maximum of +6° or -6° from the X-axis. GDA's are activated during periods when descent engine is armed.

2.1.3.5.4 Ascent Engine Control. (See figure 2.1-19.)

Ascent engine ignition and shutdown can be initiated by the PGNS, AGS, or the astronaut. Automatic and manual commands are routed to the S&C control assemblies. These assemblies provide logically ordered control of LM staging and engine on and off commands. The S&C control assemblies provide a positive command for fail-safe purposes if the engine-on command is interrupted. In the event of an abort stage command while the descent engine is firing, the S&C control assemblies provide a time delay before commanding LM staging and ascent engine ignition. The time delay ensures that descent engine thrusting has completely stopped before the LM is staged.

2.1.3.6 Power Distribution. (See figure 2.1-20.)

Each section of GN&CS receives its power independently of the other sections, from the CDR's and the LMP's buses through the circuit breakers on panels 11 and 16, respectively. The flight displays associated with the GN&CS receive power from CDR's a-c and d-c buses. When power is supplied to a particular display, a power-on indicator is energized. For the X-pointer, THRUST, RANGE, and RANGE RATE indicators, the power-on indicator is a lamp; for the FDAI's, talkbacks are used. The MISSION TIMER and the EVENT TIMER do not have power-on indicators.

2.1.3.6.1 PGNS Power Distribution.

The LGC receives 28-volt d-c primary power from the PGNS: LGC/DSKY circuit breaker. The primary power is used by power supplies within the LGC to develop +14- and +4-volt d-c power. These outputs are used for logic power within the LGC. The +14-volt d-c power supply also provides an input to the DSKY power supplies. The +4-volt d-c power supplies (2) of the LGC provide power for the standby and operate modes of LGC operation.

The standby mode of operation is initiated by pressing the PRO pushbutton on the DSKY, after keying the appropriate setup command (verb-noun combination). During standby, the LGC is put into a restart condition and the +4- and +14-volt d-c supplies are switched off. This places the LGC in a low-power mode in which only the LGC timer and a few auxiliary assemblies are operative. The DSKY power supply receives +28- and +14-volt dc and an 800-pps sync from the LGC. The power supply develops 275-volt, 800-cps power for the DSKY electroluminescent displays.

The power and servo assembly (PSA) receives input power from the PGNS: LGC/DSKY, IMU STBY, and IMU OPR circuit breakers. The input voltage is 27.5±2.5 volts dc, with transient limits between 24.0 and 31.8 volts dc. In addition to the d-c input from the EPS, the PSA power supplies require clock pulses (800 pps, 3.2 kpps, and 25.6 kpps) from the LGC. The PSA power supplies are as follows:

- 28-volt, 800-cps, ±1% power supply
- 28-volt, 800-cps, 0°ϕ, ±5% power supply
- 28-volt, 800-cps, -90°ϕ, ±5% power supply
- -28-volt d-c power supply
- 28-volt, 3,200-cps power supply

The 800-cps power supplies provide the PGNS with 1%, 5% -90°ϕ, and 5% 0°ϕ power. The 28-volt, 800-cps, 1% power supply provides the IMU resolver excitation, servoamplifier demodulator reference, a reference signal to the FDAI's, a reference to the coupling data unit, RR resolver excitation, and ACA excitation. The 28-volt, 800-cps, 5% power supply provides the -90° and 0° excitation power for the gyro wheels, the IMU blowers, PIP fixed heater power, and bias heater power. The -28-volt d-c power supply provides negative d-c inputs to the a-c amplifiers used in the inertial loops and power to the three gimbal servoamplifiers in the stabilization loops and to the pulse torque assembly power supply to generate -20 volts dc for use in accelerometer loops. The 28-volt, 3,200-cps power supply provides the IMU with 28-volt power, which is then reduced through a transformer to 2- and 4-volt levels. The power supply provides excitation voltages (2 and 4 volts) for signal ducosyn signal-generator excitation and for magnetic suspension winding excitation for the torque and signal ducosyns of the IRIG's and PIPA's. The 3,200-cps output is also used as a reference for the demodulator of the gimbal servoamplifier in all modes of operation, except the coarse-alignment mode.

The pulse torque assembly (PTA) derives input power from the PSA when the IMU operate command is generated. The PTA power supply is synchronized by a 12.8-kpps clock pulse from the LGC. The PTA power supply provides +20 volts dc to the three binary current switches in the PIPA loops and +120 volts dc to the binary current switch and d-c differential amplifier in the fine-alignment electronics associated with the stabilization loops of the IMU. The PTA also provides three separate +28-volt d-c precision voltage references to each of the three PIPA d-c differential amplifiers.

The CDU power supplies (+4 and +14 volts dc) receive 28 volts, 800 cps, and +28 volts dc (IMU operate signal) from the PSA, and a sync pulse from the LGC. The power supplies provide a regulated output voltage for use in the CDU logic circuitry. Under full load conditions, the +4-volt d-c power supply is required to provide +4 volts dc ±1%, at 2.5 to 3.0 amperes.

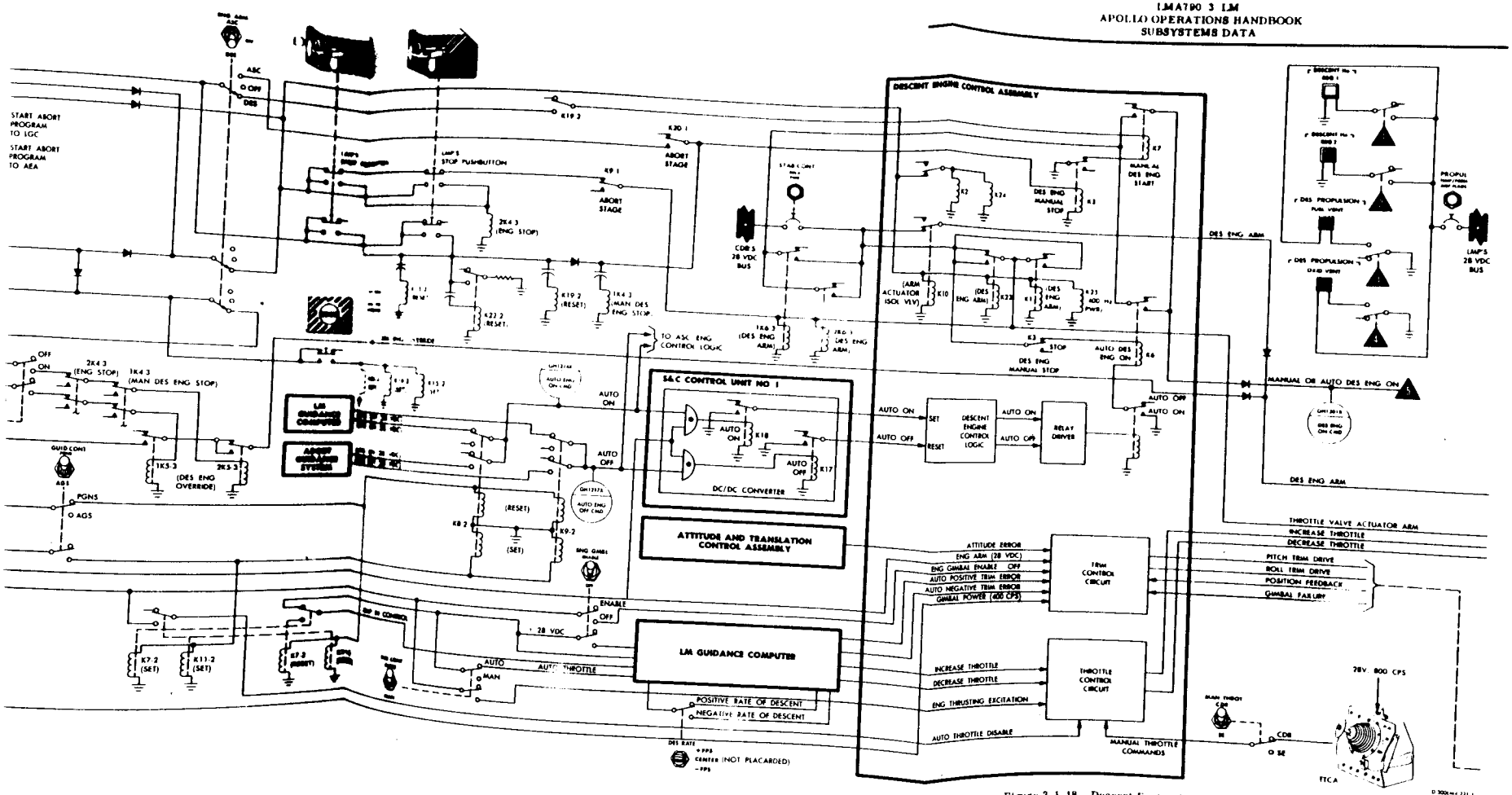

Figure 2.1-18 Descent Engine Control Schematic (Sheet 1 of 2)

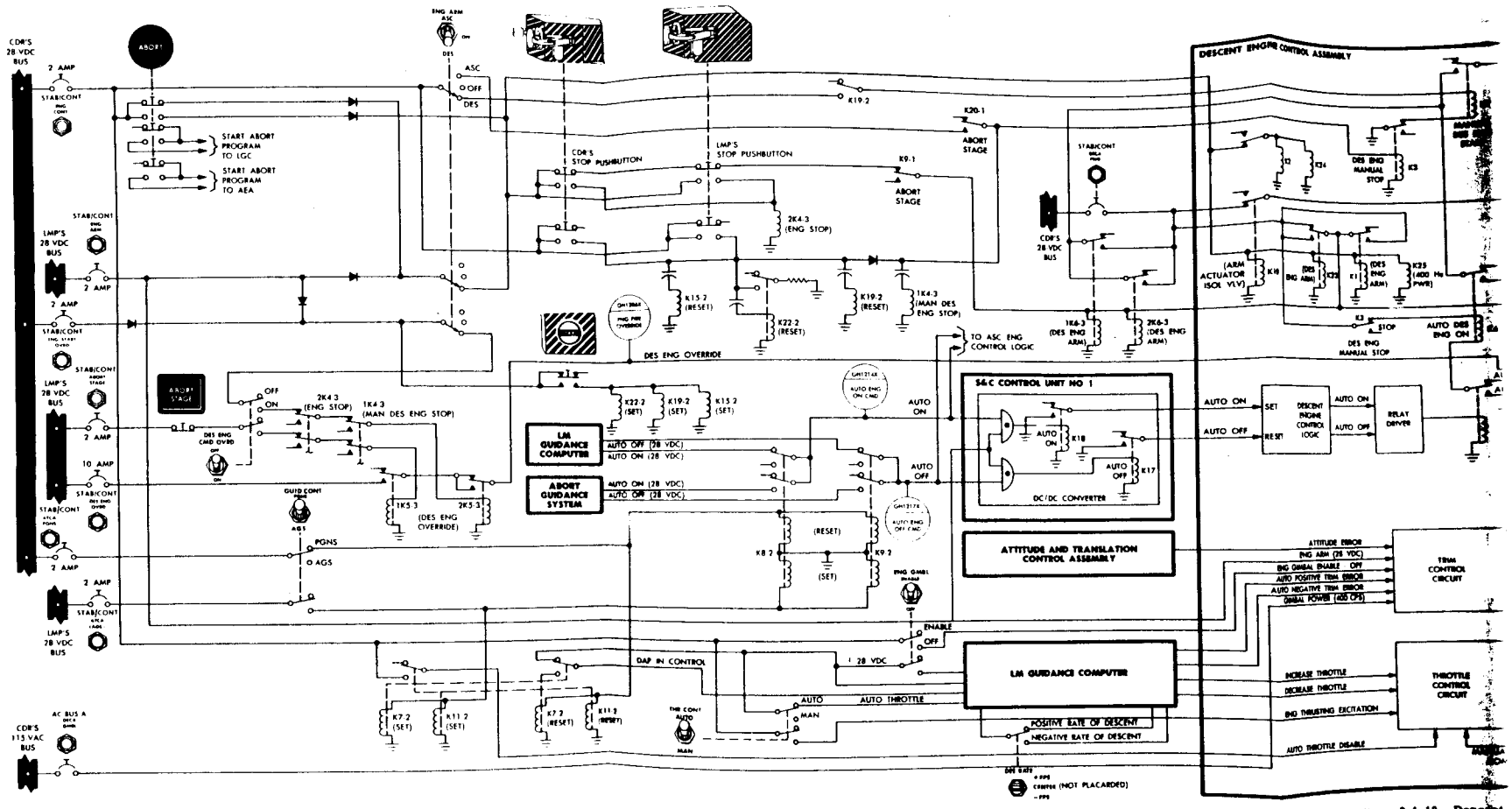

Figure 2.1-18. Descent

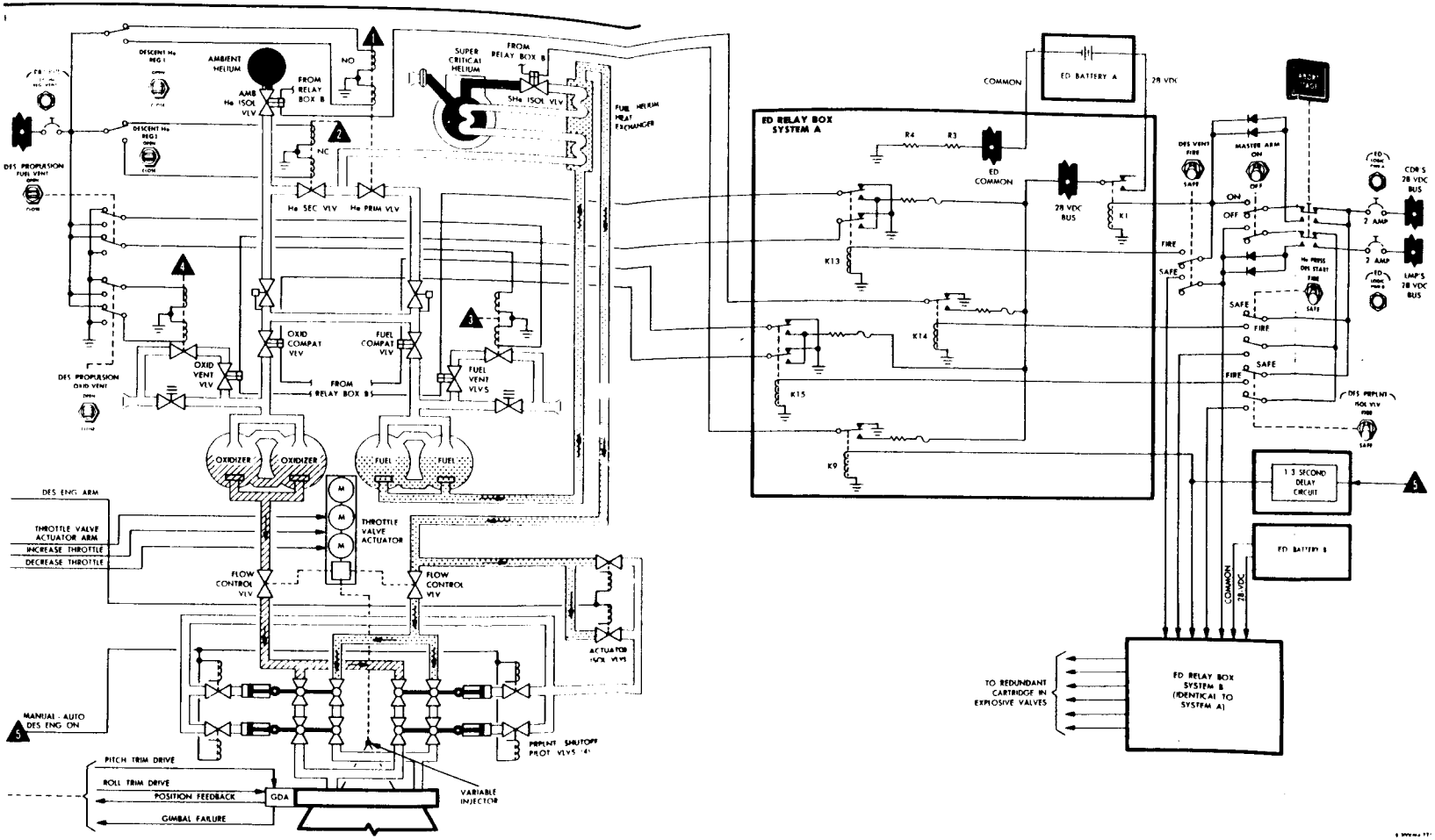

Figure 2.1-18. Descent Engine Control Schematic (Sheet 2 of 2)

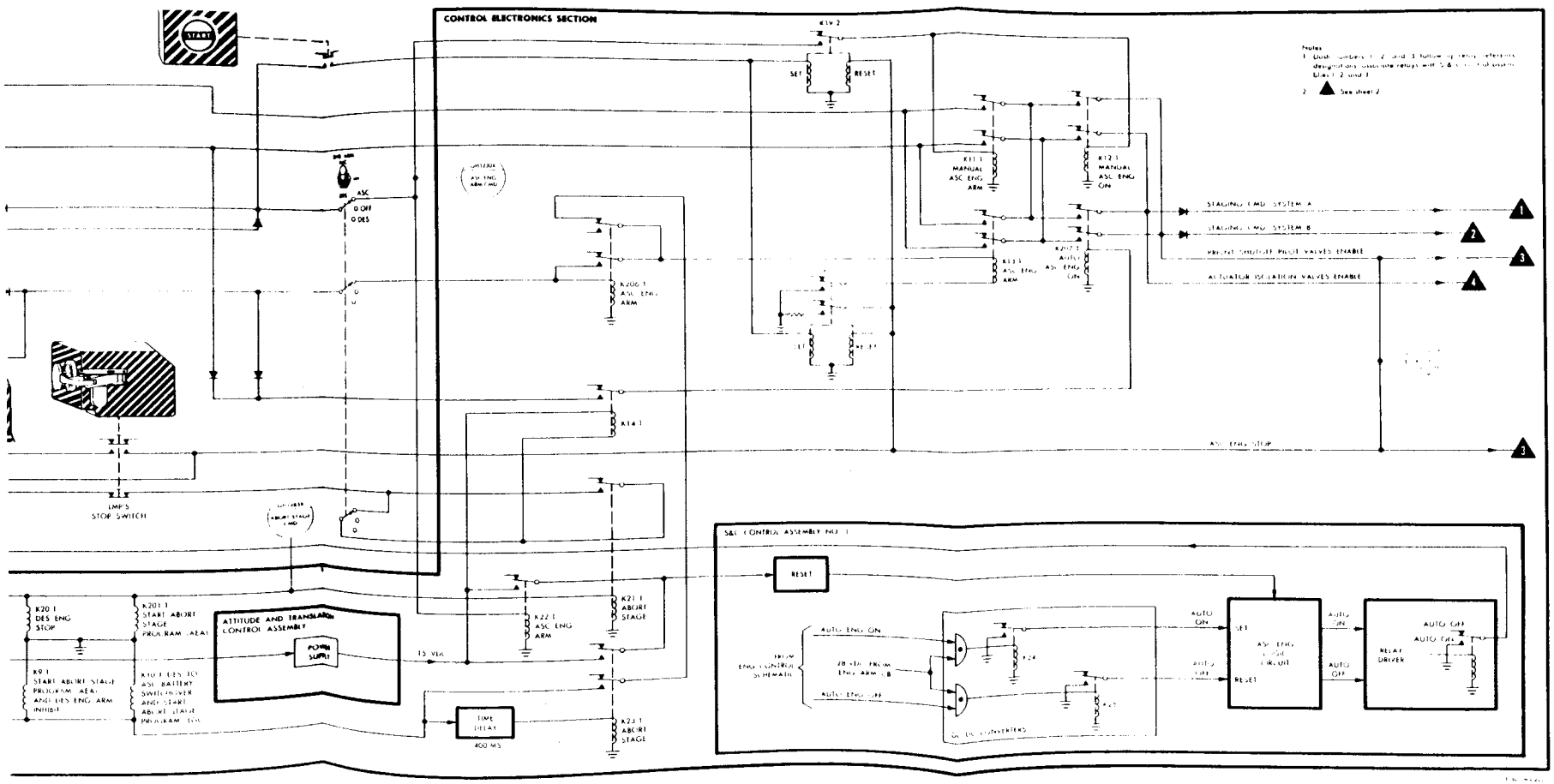

Figure 2.1-19. Ascent Engine Control Schematic (Sheet 1 of 2)

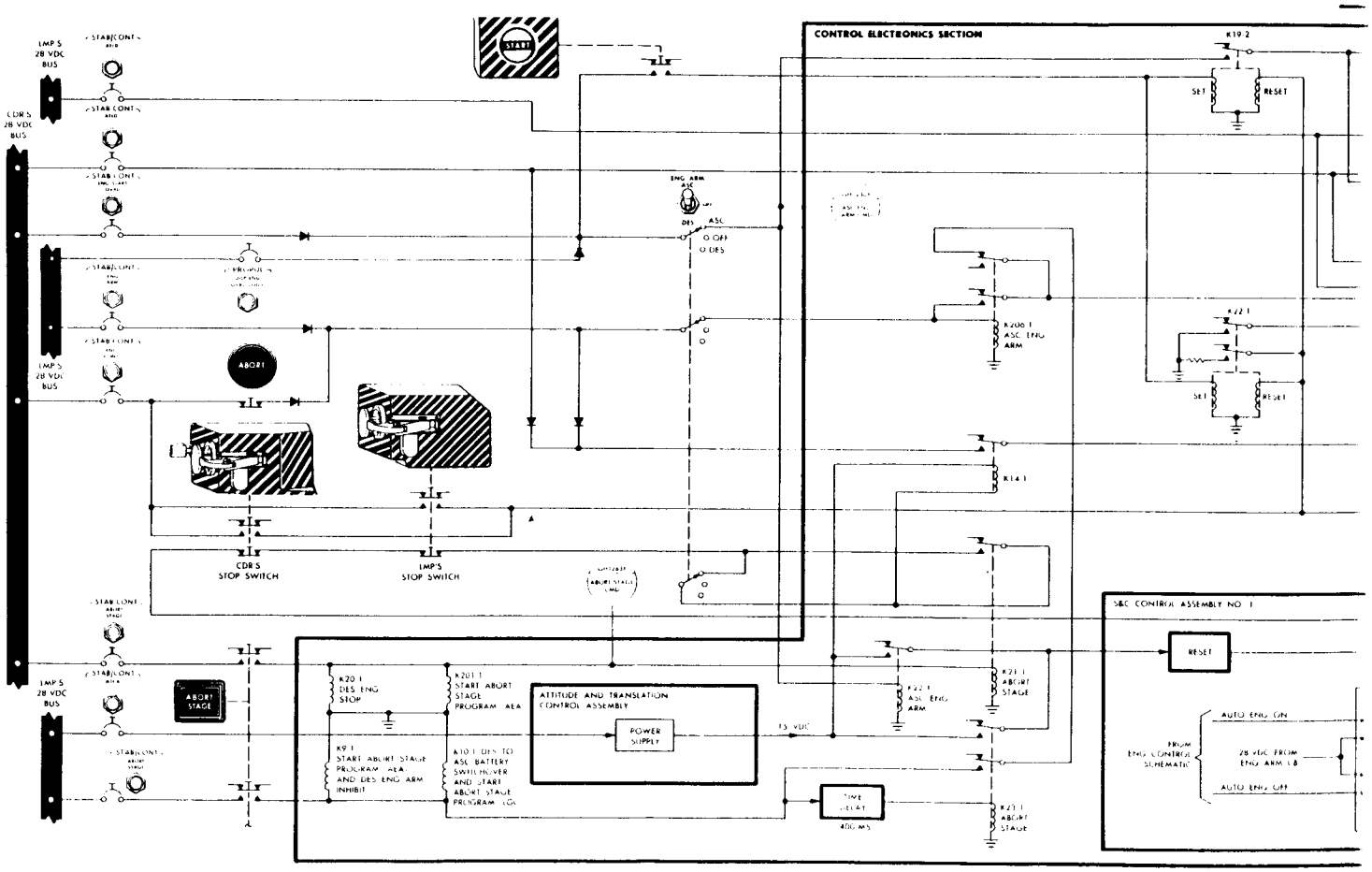
CONTROL ELECTRONICS SECTION
START
ABORT
ABORT STAGE
CDR'S 28 VDC BUS
LMP'S 28 VDC BUS
CDR'S STOP SWITCH
LMP'S STOP SWITCH
ENG ARM
ASC
DES
OFF
DES
K19 2
SET
RESET
K22 1
K206 1 ASC ENG ARM
K14 1
K20 1 DES ENG STOP
K9 1 START ABORT STAGE PROGRAM AEA AND DES ENG ARM INHIBIT
K201 1 START ABORT STAGE PROGRAM AEA
K10 1 DEN TO ASC BATTERY SWITCHOVER AND START ABORT STAGE PROGRAM LGA
ATTITUDE AND TRANSLATION CONTROL ASSEMBLY
POWER SUPPLY
15 VDC
TIME DELAY
400 MS
K21 1 ABORT STAGE
K22 1 ASC ENG ARM
K23 1 ABORT STAGE
S&C CONTROL ASSEMBLY NO 1
RESET
AUTO ENG ON
FROM ENG CONTROL SCHEMATIC
28 VDC FROM ENG ARM CB
AUTO ENG OFF

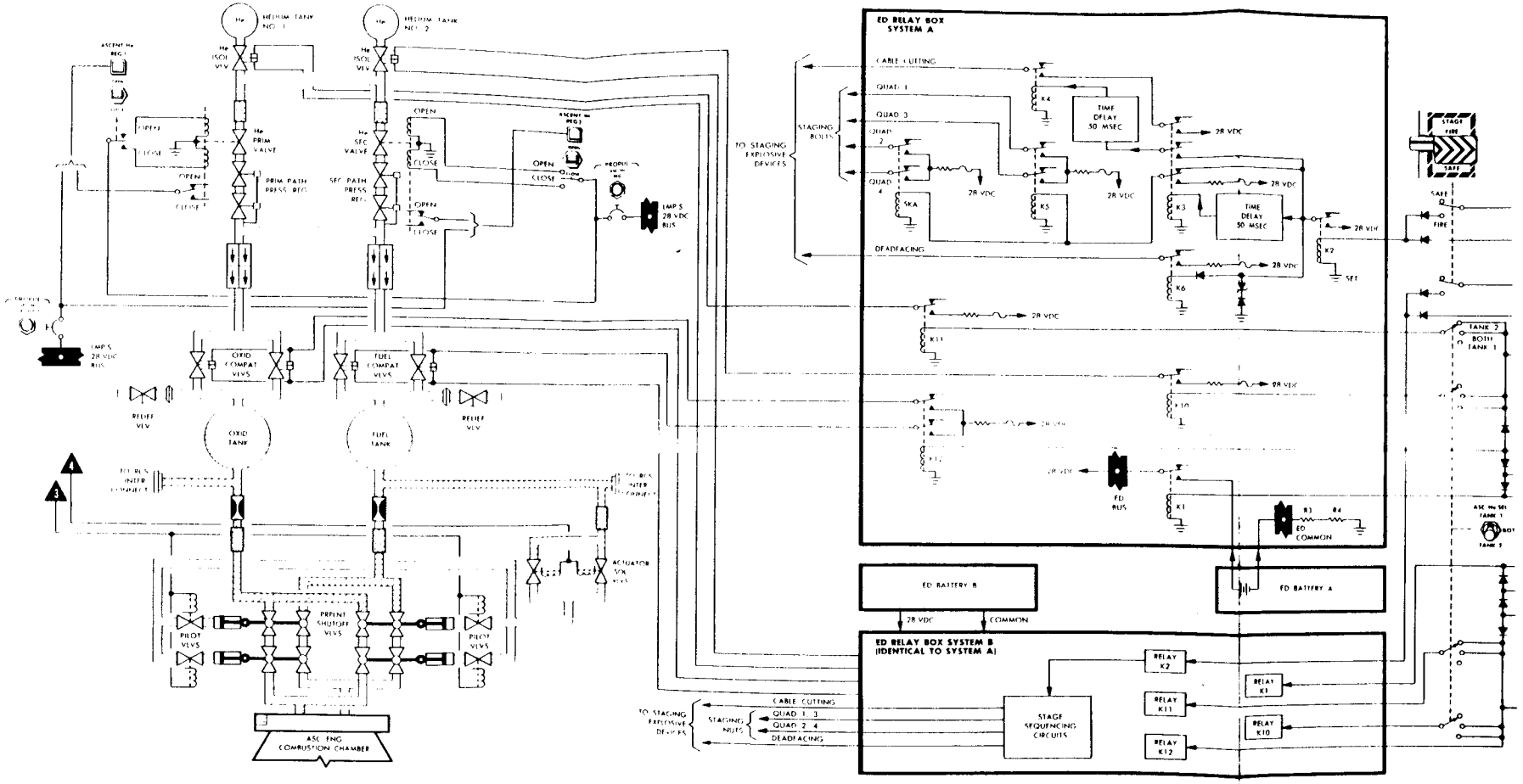

Figure 2.1-19. Ascent Engine Control Schematic (Sheet 2 of 2)

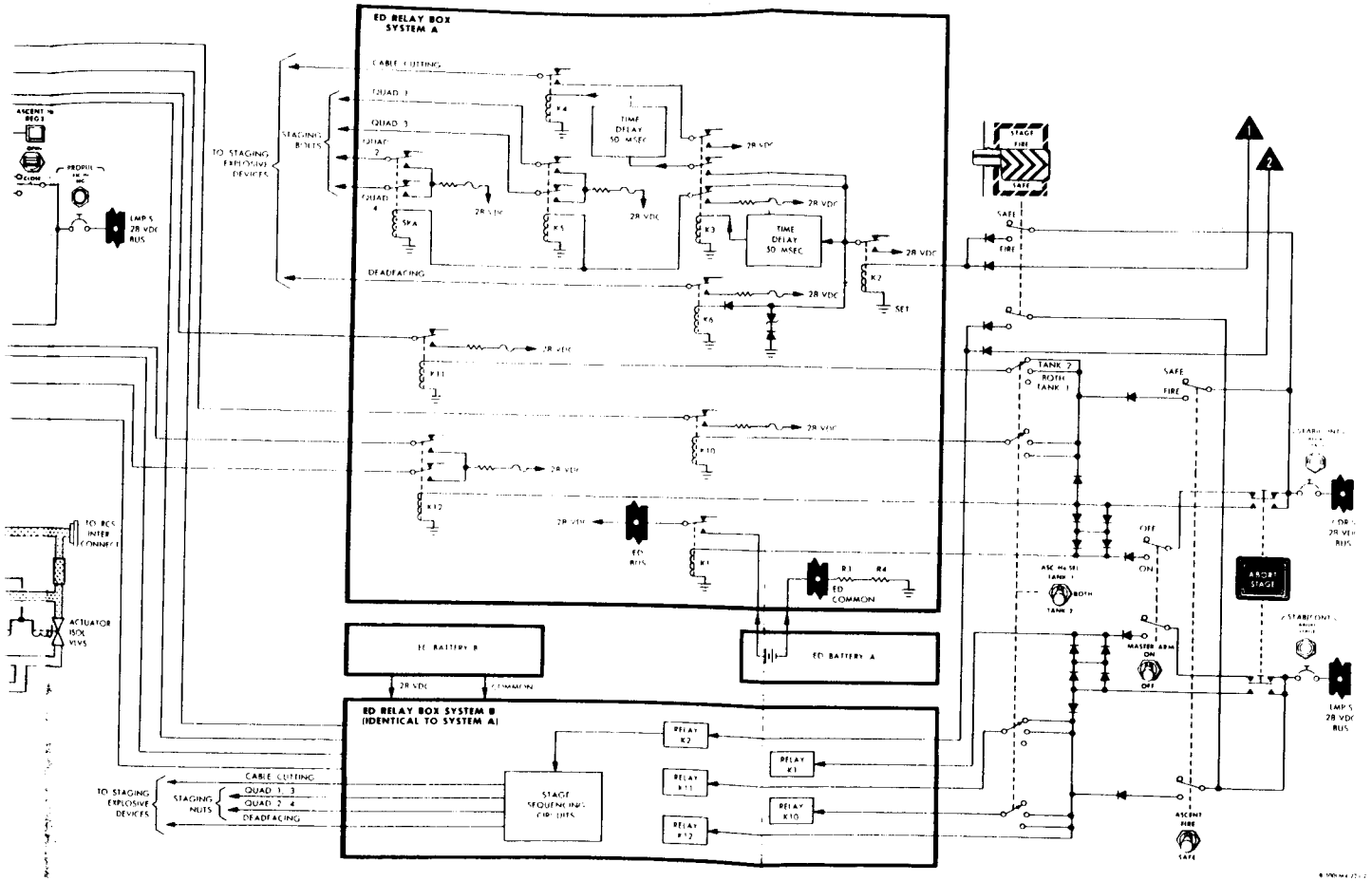
ED RELAY BOX SYSTEM A
CABLE CUTTING
QUAD 1
QUAD 3
QUAD 2
QUAD 4
DEADFACING
TO STAGING EXPLOSIVE DEVICES
STAGING BOLTS
TIME DELAY 50 MSEC
28 VDC
K4
K5
K3
K2
K6
K11
K10
K12
K1
SET
ED BUS
R1
R4
ED COMMON
ED BATTERY B
ED BATTERY A
ED RELAY BOX SYSTEM B (IDENTICAL TO SYSTEM A)
RELAY K2
RELAY K1
RELAY K11
RELAY K10
RELAY K12
STAGE SEQUENCING CIRCUITS
TO STAGING EXPLOSIVE DEVICES
STAGING NUTS
QUAD 1, 3
QUAD 2, 4
ASCENT BOLT
PROPUL
LMP'S 28 VDC BUS
TO RCS INTER CONNECT
ACTUATOR ISOL VLVS
STAGE FIRE
SAFE
FIRE
TANK 2
BOTH
TANK 1
OFF
ON
ASC MAN SEL TANK 1
BOTH
TANK 2
MASTER ARM ON
OFF
ABORT STAGE
ASCENT FIRE
SAFE
1
2

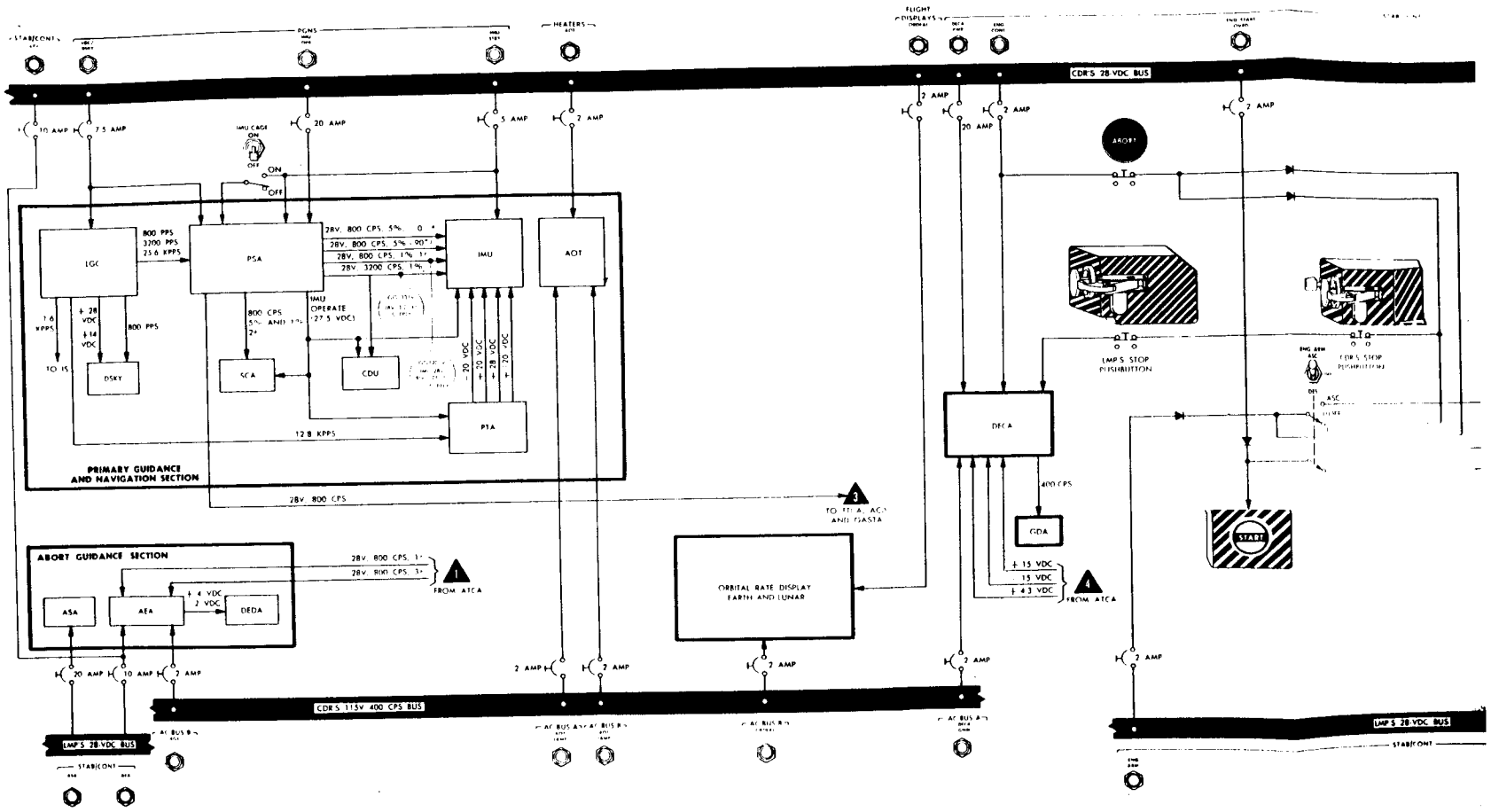

Figure 2.1-20.

GUIDANCE, N

Mission LM Basic Date 1 February

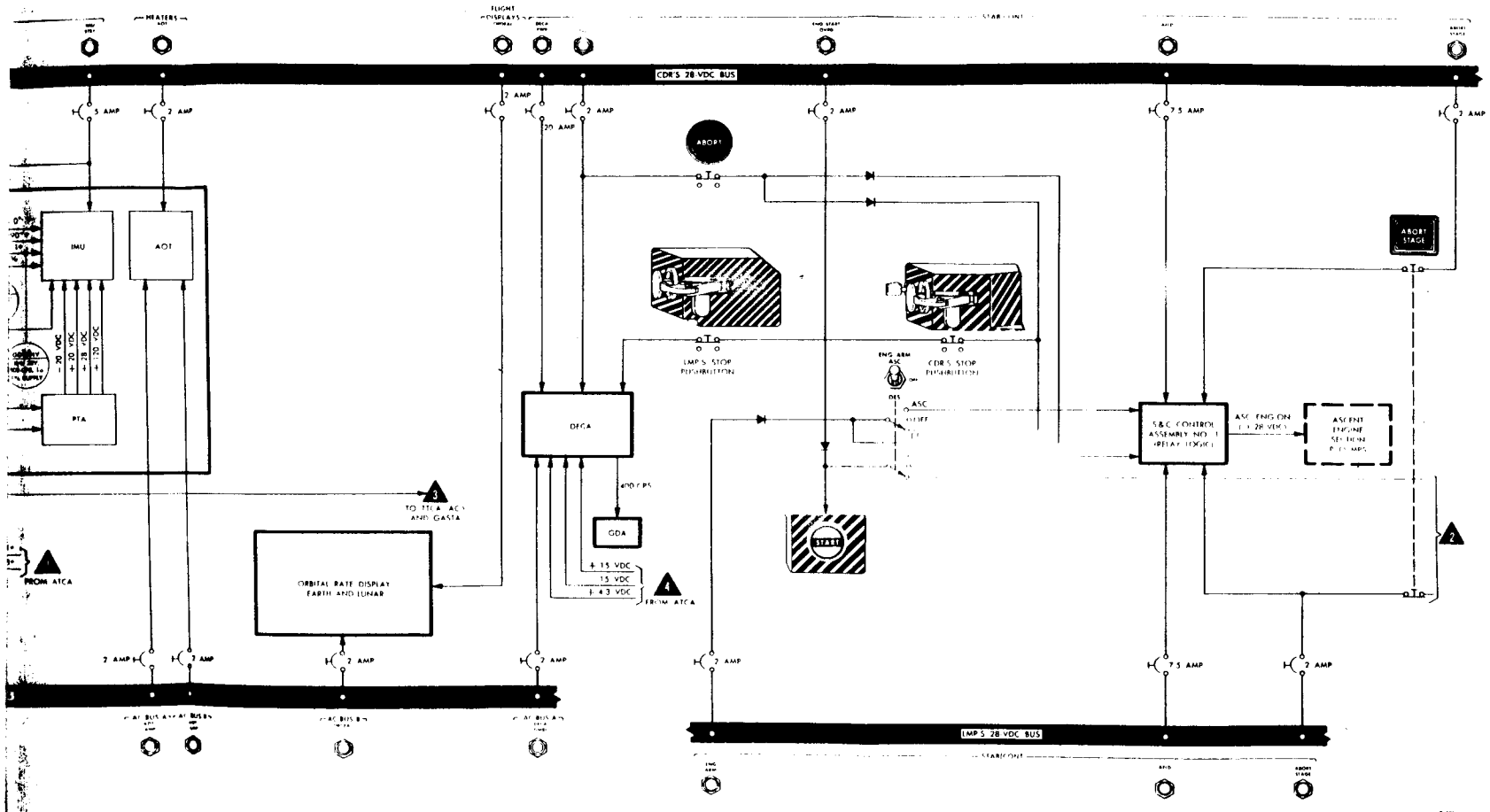

Figure 2.1-20. GN&CS Power Distribution (Sheet 1 of 2)

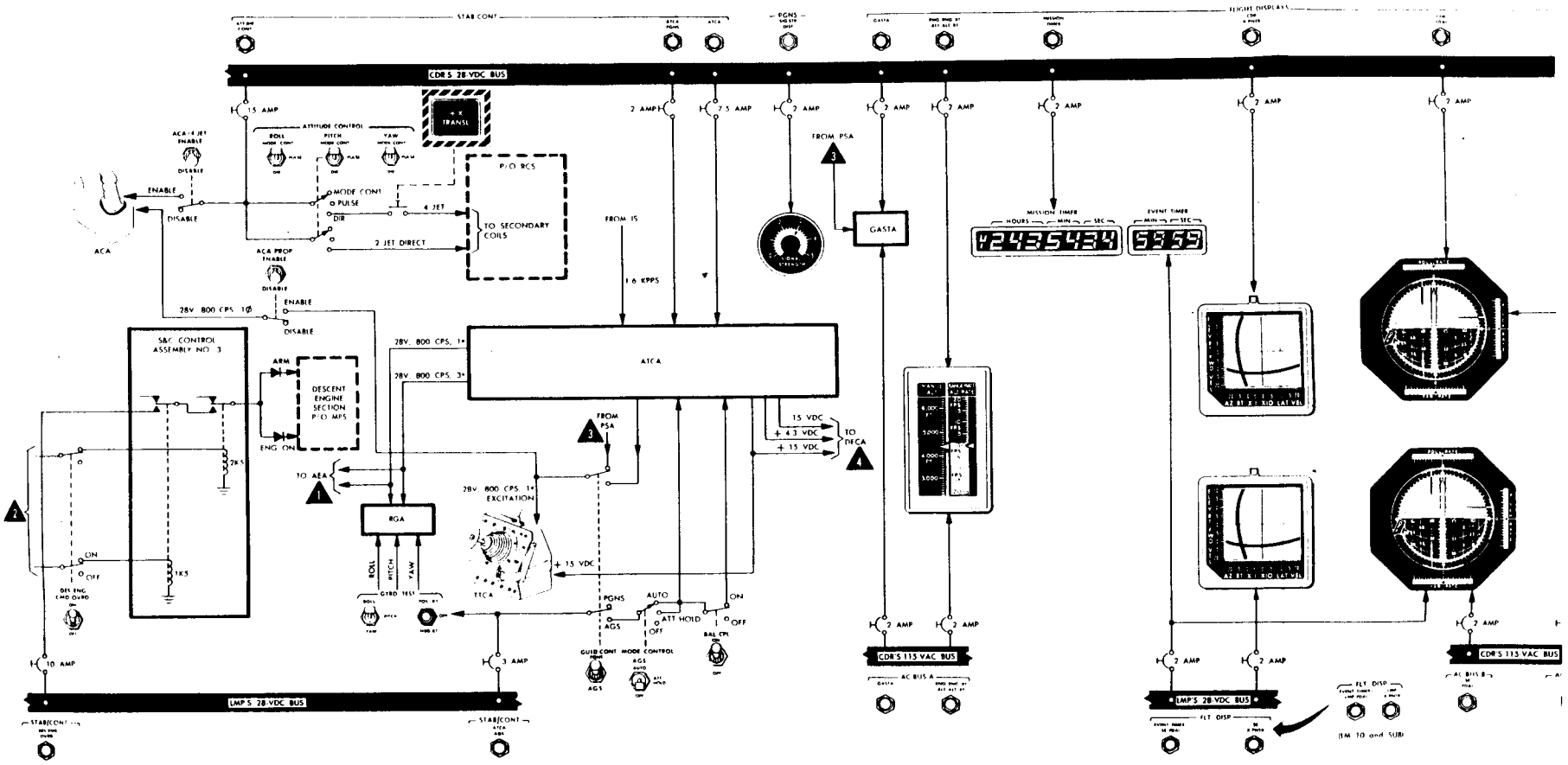

Figure 2.1-20. GN&CS Power Distribution (Sheet 2 of 2)

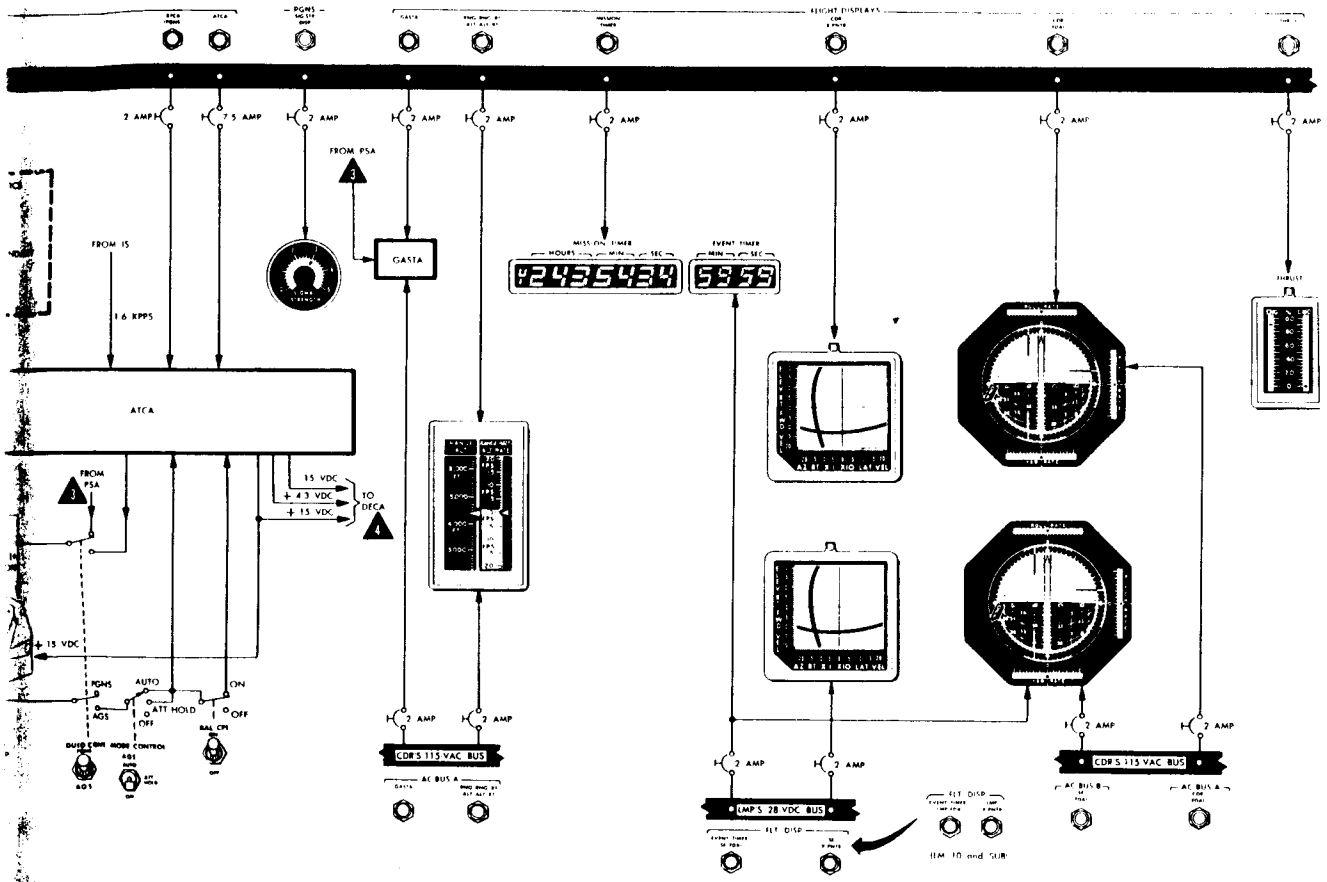
2 AMP
7.5 AMP
FROM PSA
FROM IS
1.6 KPPS
ATCA
GASTA
MISSION TIMER
HOURS MIN SEC
EVENT TIMER
MIN SEC
15 VDC
+ 4.3 VDC
+ 15 VDC
TO DECA
+ 15 VDC
PGNS
AGS
AUTO
ATT HOLD
OFF
ON
OFF
BALL CPL
MODE CONTROL
CDR'S 115 VAC BUS
AC BUS A
LMP'S 28 VDC BUS
ELT DISP
CDR'S 115 VAC BUS
AC BUS B
AC BUS A
THRUST

The signal conditioner assembly (SCA) receives its operating power from the PSA. The operating power includes IMU operate and IMU standby +28 volts dc used for B+ voltage in the SCA circuits, and reference voltages consisting of 800-cps and 3,200-cps 1% feedback voltage from the IMU. Three additional reference voltages (2.5 volts dc for bias, an 800-cps square wave, and a 3,200-cps square wave) are generated in the SCA.

The AOT receives 115 volts ac for illumination of the reticle, from the AC BUS A and the AC BUS B: AOT LAMP circuit breakers. The heaters in the AOT receive power from the CDR's d-c bus through the HEATERS: AOT circuit breaker.

2.1.3.6.2 AGS Power Distribution.

All power (ac and dc) required by the ASA is provided by the ASA power supply, which receives 28-volt d-c power from the STAB/CONT: ASA circuit breaker (panel 16). The power supply provides regulated 28 volts dc for current regulators, +12 volts dc to bias amplifiers in the accelerometers, +4 volts dc for use in a frequency countdown subassembly and the gyros, -12 volts dc for use in the gyros, -6 volts dc for use as bias for the gyros, and -2 volts dc for use as bias in the frequency countdown subassembly. A-C voltages are provided for the accelerometer gyros and pulse torquing servoassemblies by 28-volt, 800-cps inputs from the ATCA.

The AEA uses two power supplies. One operates in the standby and operates modes. It supplies power to clock countdown circuits and for the three integrating registers of the input-output subassembly. The other power supply operates in the operate mode and supplies power to the remainder of the AEA. These power supplies receive 28-volt d-c power from the STAB/CONT: AEA circuit breaker (panel 16) and 115-volt, 400-cps power from the AC BUS B: AGS circuit breaker (panel 11). They also receive 28-volt, 800-cps power from the ATCA power supply for synchronization. The operate power supply provides -2, +4, +6, +13.5, +14, -13.5, and -18 volts dc.

The DEDA operating power consists of +4 and -2 volts dc supplied by the operate power supply of the AEA.

2.1.3.6.3 CES Power Distribution.

The CDR's and LMP's 28-volt d-c buses and the CDR's 115-volt a-c bus supply power to the CES. The ACA receives 28-volt d-c power from the CDR's bus for two-jet direct control through the STAB/CONT: ATT DIR CONT circuit breaker. D-C excitation from the ATCA is used by the ACA to generate pulse commands. Proportional rate commands are generated from a 28-volt, 800-cps signal from the ATCA. This input signal to the ACA is also used by the TTCA during AGS control, for generation of throttle commands. During PGNS control, the PSA supplies the excitation voltage for the TTCA. The TTCA receives ±15 volts dc via an S&C control assembly from the ATCA power supply for the generation of translation commands. The STAB/CONT: ATT DIR CONT circuit breaker also provides power for the secondary coils of the TCA's during the direct mode and when the +X TRANSL pushbutton is used.

The ATCA primary power supply receives 28 volts dc from the LMP's bus through the STAB/CONT: ATCA circuit breaker. When the ATCA/AGS circuit breaker is on and GUID CONT switch is set to AGS and the MODE CONTROL: AGS switch is set to ATT HOLD or AUTO, the thruster drivers are enabled. When the BAL CPL switch is set to ON, the 28 volts from the circuit breaker enables the four upward-firing thrusters. Power from the circuit breakers is also used to test the RGA, using the GYRO TEST switches (panel 3).

The ATCA primary power supply provides regulated +15, -15, and +4.3 volts dc for the ATCA and other GN&CS equipment, and +6 and -6 volts dc for the ATCA only. The power supply is synchronized by a 1.6-kpps signal (square wave) to generate a regulated 28-volt, 800-cps, 1ϕ output and a regulated, isolated, 28-volt, 800-cps, 3Ø output for RGA gyro spin motor excitation. Single phase is also supplied for AEA signal reference excitation. If the synchronizing pulses are lost, the power supply runs free at 800 cps ±1%. Another ATCA power supply uses the 28-volt d-c input to generate redundant -4.7 volts dc for use within the ATCA, for jet solenoid driver bias. Also, 28-volt, 800-cps power is supplied to the RR as "backup" power and to the IS and the rate displays as reference.

The STAB/CONT: DECA PWR circuit breaker supplies +28 volts dc to the descent engine control circuit in the DECA. When the descent engine is armed, this input power is routed to the actuator isolation valves of the descent engine. The power supply of the DECA consists of a reference power supply and an auxiliary power supply. The reference supply receives +15 and -15 volts dc from the 28-volt d-c ATCA power supply. D-C active regulators in the reference supply convert the +15 and -15 volts dc to +6 and -6 volts dc, respectively. The 6-volt outputs of these regulators are very stable; they are used as a source for a voltage divider, which supplies the reference voltages to the comparators.

The auxiliary power supply receives 400-cps power from the CDR's a-c bus through the AC BUS A: DECA GMBL circuit breaker. The power supply rectifies and filters the a-c power to supply +22 and -22 volts dc for the DECA manual throttle circuit and +22 volts dc for the power failure time-delay circuit. During an ATCA power failure, the auxiliary power supply provides +6 volts dc to the descent engine control circuit and enables full thrust of descent engine. In addition, +22- and -22-volt d-c reference voltages are used for a power failure monitor circuit in the DECA. The +15- and -15-volt d-c inputs to the reference power supply are also connected with the +22- and -22-volt d-c inputs, respectively, to supply the manual throttle circuit if the 22-volt d-c supplies fail.

Power from the STAB/CONT: DES ENG CONT circuit breaker enables the engine control circuits in the DECA. This power is interrupted when the ABORT STAGE pushbutton is used or when the ABORT or STOP pushbuttons are used. The STAB/CONT: ENG START OVRD, AELD (2), ABORT STAGE (2) ENG ARM, and DES ENG OVRD circuit breakers are used in conjunction with the relay logic of the DECA and S&C control assemblies to accomplish ascent or descent engine control.

The GASTA receives 115 volts ac from the CDR's a-c bus through the AC BUS A: GASTA circuit breaker and 28 volts dc from the CDR's d-c bus through the FLIGHT DISPLAYS: GASTA circuit breaker. These two inputs energize the computer servo in the GASTA.

2.1.3.6.4 ORDEAL Power Distribution.

The ORDEAL receives 115 volts ac from the CDR's a-c bus through the AC BUS B: ORDEAL circuit breaker and 28 volts dc from the CDR's d-c bus through the FLIGHT DISPLAYS: ORDEAL circuit breaker. The 115-volt a-c power lights the ORDEAL panel and drives the resolvers. The d-c power is used for switching.

2.1.3.6.5 800-cps Synchronization Loop. (See figure 2.1-21.)

Because the CES uses 800-cps analog signals as a reference, the various assemblies must be synchronized. In the primary guidance mode, the ACA's and TTCA's receive 28-volt, 800-cps signals from the PSA of the PGNS. The proportional attitude commands to the LGC are either in phase or 180° out of phase with this 800-cps signal. In the abort guidance mode, the ACA's and TTCA's receive 28-volt, 800-cps signals from the ATCA. The proportional attitude commands fed back to the ATCA are now synchronized with the ATCA power supply. The AGS and RGA receive 28-volt, 800-cps signals from the ATCA; their outputs, returned to the ATCA, are synchronized. The FDAI's also receive the 800-cps synchronization voltage to properly display the RGA signals. In turn, the ATCA itself is synchronized to the clock (1,600 pps) of the PCMTEA; however, it can run free as its own source should this synchronizing pulse be lost.

2.1.4 MAJOR COMPONENT/FUNCTIONAL DESCRIPTION.

2.1.4.1 Primary Guidance and Navigation Section - Inertial Subsection.

The ISS comprises the navigation base (NB), IMU, the coupling data unit (CDU), the pulse torque assembly (PTA), the power and servo assembly (PSA), and the signal conditioner assembly (SCA). (See figure 2.1-22.)

ISS operation can be initiated automatically by the LGC, or manually by the astronaut using DSKY entries to command the LGC to select the various operating modes. The ISS status or mode of operation can be displayed on the DSKY, as determined by a computer program. The IMU furnishes the inertial reference; it consists of a stable member with three degrees of freedom, stabilized by three integrating gyros. The stable member must be aligned with respect to the reference coordinate system each

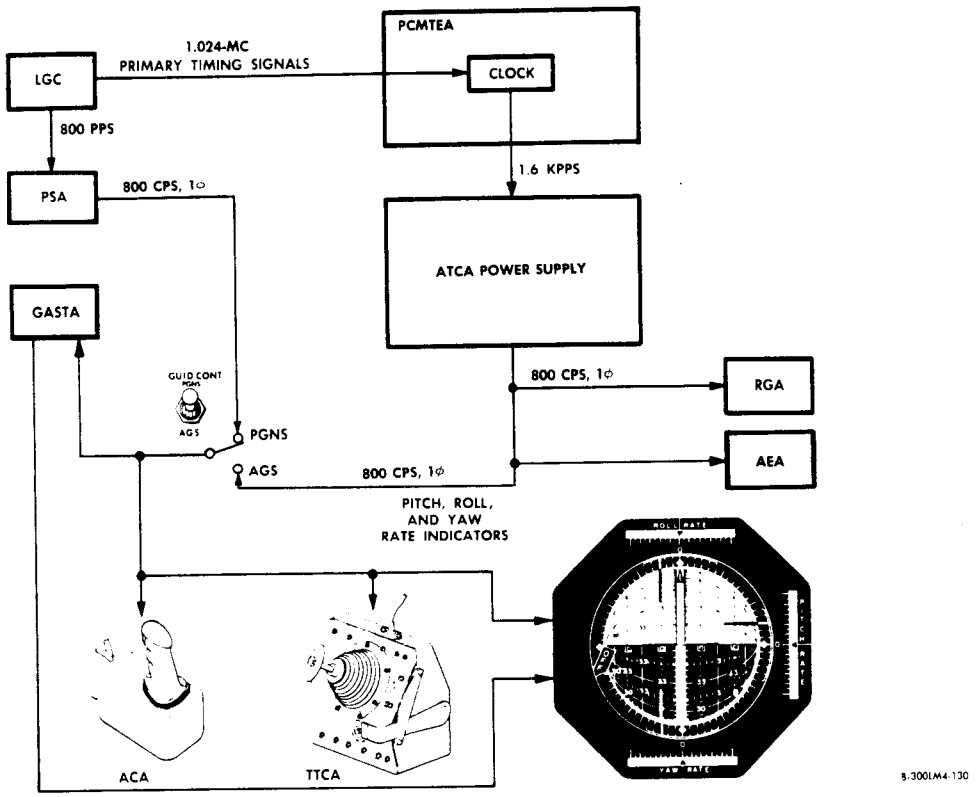

Figure 2.1-21. 800-cps Synchronization Loop

time the ISS is powered up. The stable member must be realigned during flight because it may deviate from its alignment, due to gyro drift. Also, the crew may desire a new stable member orientation. The alignment orientation may be that of the CSM or that defined by the thrusting programs within the LGC. Sighting of two stars is required for in-flight fine alignment. The stable member is aligned after the LGC processes sighting data that have been combined with the known IMU angles and supplies gyro-torquing signals to the IMU.

Once the ISS is energized and aligned to an inertial reference, LM rotation is about the gimbaled stable member, which remains fixed in space. Resolvers, mounted on the gimbal axes, act as angle-sensing devices and measure LM attitude with respect to the stable member. These angular measurements are displayed to the astronaut by the flight director attitude indicator (FDAI), and angular changes of the inertial reference are sent to the LGC.

Desired LM attitude is calculated in the LGC and compared with the actual gimbal angles. A difference between the actual and calculated angles results in generation of attitude error signals, by the ISS channels of the CDU, which are sent to the FDAI for display. These error signals are used by the digital autopilot program in the LGC to activate RCS thrusters for LM attitude correction. Attitude error is displayed by the FDAI error needles. LM acceleration due to thrusting is sensed by three PIPA's, which are mounted on the stable member with their input axes orthogonal. The resultant signals (velocity changes) from the accelerometer loops are supplied to the LGC, which calculates the total LM velocity.

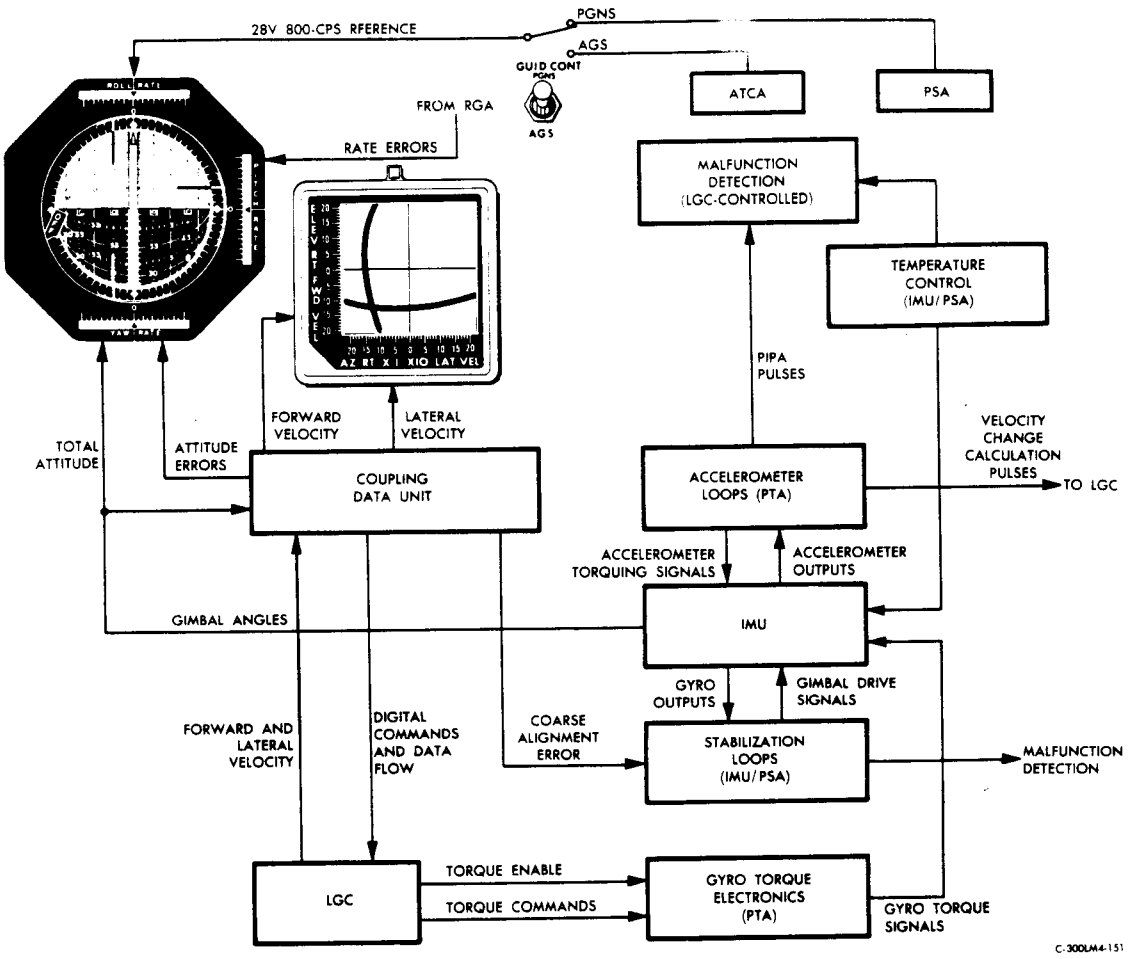

Figure 2.1-22. Inertial Subsection - Functional Diagram

2.1.4.1.1 Navigation Base. (See figure 2.1-23.)

The navigation base is a lightweight mount that supports, in critical alignment, the IMU, ASA, and AOT. It consists of a center ring with four legs that extend from either side. The IMU is mounted to the ends of one side of the four legs. The AOT and the ASA are mounted to the opposite ends of the legs. The navigation base is bolted to the LM structure above the astronauts' head, with three mounting pads on the center ring. An electrical grounding strap is attached to the center ring and to the LM structure.

2.1.4.1.2 Inertial Measurement Unit. (See figure 2.1-24.)

The IMU uses three Apollo 25-inertial reference integrating gyros (IRIG's) to sense changes in stable member orientation, and three 16-pulse integrating pendulous accelerometers (PIPA's) to sense velocity changes. The 25-IRIG's are fluid- and magnetically-suspended, single-degree-of-freedom gyros with a 2.5-inch-diameter case. The 16-PIPA's are fluid- and magnetically-suspended, pendulum-type devices with a 1.6-inch-diameter case. The IMU gimbals consist of an outer gimbal mounted to the case, a middle gimbal mounted to the outer gimbal, and an inner gimbal (stable member) mounted to the

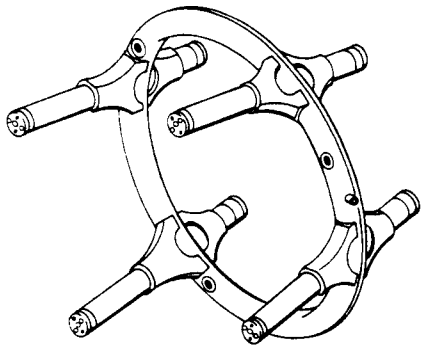

300LM4-200

Figure 2.1-23. Navigation Base

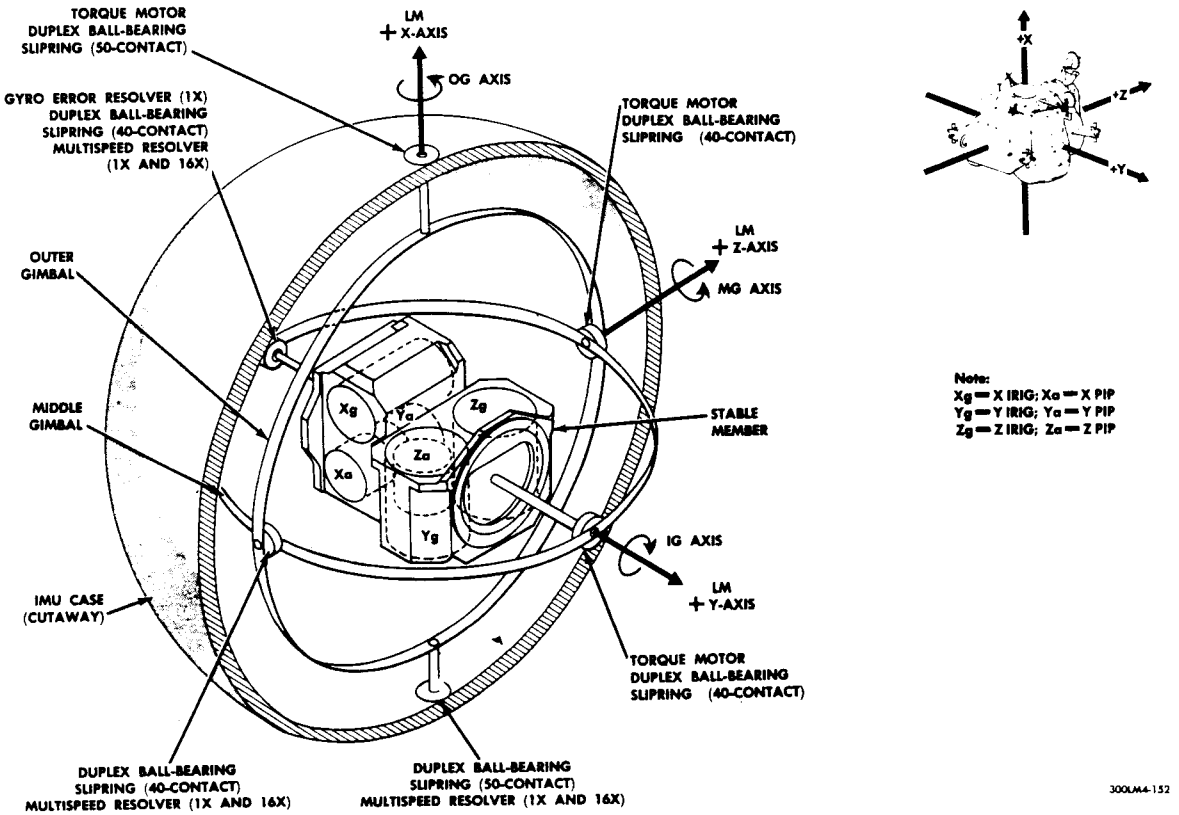

Figure 2.1-24. IMU Gimbal Assembly

middle gimbal. All three gimbals are spherical, have 360 degrees of freedom, and are positioned by torque motors. The IMU also consists of a failure-detection assembly and a temperature control assembly. The complete IMU weighs approximately 42 pounds.

Inertial Reference Integrating Gyros. The IRIG's are the sensing elements of the IMU stabilization loop. The three gyros are mounted on the stable member, with their input axes mutually perpendicular. Any change in the attitude of the LM changes the attitude of the stable member and is sensed by one or more of the gyros. The gyros convert this displacement into an error signal, which is amplified and fed to the IMU gyro-torquing loop. The gyro-torquing loop repositions the stable member until this error signal is nulled and the original attitude of the stable member is reestablished.

The gyros tend to maintain their attitude with respect to inertial space. If a gyro is forced to rotate about the input axis (which is perpendicular to the wheel spin axis), it responds with a torque about the output axis (which is perpendicular to the spin and input axes). The spin axis is displaced from its normal (null) alignment with the spin reference axis by an amount equal to the angle through which the output axis has rotated. The spin reference, input, and output axes are always mutually perpendicular.

The construction of the IRIG's is similar to that of conventional single-degree-of-freedom gyros. The IRIG's consist of a wheel assembly, spherical (sealed) float, cylindrical case, single generator ducosyn, and torque generator ducosyn. The gyroscopic wheel, mounted within the sealed float on a shaft perpendicular to the axis of the float, spins on preloaded ball bearings. The wheel is driven by a hysteresis synchronous motor in an atmosphere of helium, which prevents corrosion of the ferrous parts and provides good transfer of heat. The helium in the float is at a pressure of one-half atmosphere. The torque generator ducosyn is mounted on one end of the float shaft; the signal generator ducosyn is mounted at the other end.

The space between the float and the case is filled with a suspension and damping fluid. This fluid is maintained at the same density as the float, thereby suspending the float with respect to the case and removing the friction between the float pivot and bearing. The fluid density is kept equal to the density of the float by maintaining the gyro and its fluid at the proper temperature. The fluid also damps the float oscillations with respect to the case. The space immediately surrounding the float is entirely filled with fluid. Most of the nonfunctional space within the gyro case is consumed by damping blocks which assist in the control of the damping coefficient.

The ducosyns consist of a separate magnetic suspension assembly and a separate transducer microsyn mounted as a single unit. Each ducosyn contains two separate stators, which are mounted to the case, and two separate rotors, which are mounted on a common ring on the float assembly. The signal generator ducosyn is mounted, in the IRIG's, on the positive output-axis end of the float to provide magnetic suspension. The transducer microsyn provides an electrical analog signal proportional to the position of the float. A torque generator ducosyn is mounted on the negative output-axis end of the float to provide magnetic suspension. The transducer microsyn converts an electrical error signal into torque about the output axis. The IRIG magnetic suspension assembly and the primary of the signal generator require 4-volt, 3,200-cps, single-phase excitation. In addition to the magnetic and fluid suspension, the IRIG's have a set of pivots and bearings on the output axis.

Pulse Integrating Pendulous Accelerometers. The PIPA's are the sensing elements of the IMU accelerometer loops. The three accelerometers are mounted with the IRIG's on the stable member, with their input axes mutually perpendicular. Any change in LM velocity is sensed by one or more of the accelerometers. The PIPA's route the change in velocity through the accelerometer loops to the LGC. The LGC, in turn, issues accelerometer drive signals to torque the PIPA's back to their null position.

The PIPA is basically a pendulum-type device consisting of a cylinder with a pendulous float pivoted with respect to a case. The axis of the pivot defines the output axis. The space between the pendulous float and the case is filled with fluid. A signal generator ducosyn is mounted on the positive end of the output axis to provide magnetic suspension and output signals indicative of rotational position of the float. A torque generator ducosyn also acts as a transducer to convert torque signals, in the form of electrical pulses, into mechanical torque about the output axis. A 2-volt rms, 3,200-cps, 1ϕ excitation is required for the PIPA magnetic suspension and the primary winding of the signal generator.

The float body is a cylinder of beryllium, which is fitted to a shaft on which the float pivots. The rotors of the ducosyns are mounted on the ends of the float body. The complete float assembly is in the main housing assembly and the space serves as both a fluid suspension for the float and as a viscous damping gap for the fluid. The main housing contains a bellows assembly to take up the expansions and contractions of the fluid during heating. The end housings contain the ducosyn stators and the pivot bearing. The magnetic suspension units have tapered stator poles and a tapered rotor so that magnetic suspension forces are developed in both the axial and radial directions. The main housing assembly is completely covered by a case, which provides magnetic shielding and hermetically seals the unit. Heating coils between the main housing and case heat the suspension fluid to the proper temperature. All electrical signals are routed through the torque generator end of the case.

When an acceleration is sensed along the input axis of the accelerometer, the float rotates from the null position. This rotation is sensed by the signal generator ducosyns. The reference excitation voltage of the signal generator is synchronized with the LGC clock, which is the reference for all GN&CS and loop timing.

The output of the secondary of the signal generator ducosyn consists of two amplitude-modulated, suppressed-carrier signals: one of zero phase; the other, π phase. These two 180° out-of-phase signals are phase-shifted 45° from the reference excitation (by the effect of a resistor in series with the secondary winding) and amplified by a preamplifier mounted on the stable member.

Inner Gimbal Assembly. The inner gimbal (IG), referred to as the stable member, is free to rotate 360° about its axis. The stable member is machined from a solid block of cold-pressed and sintered beryllium; holes for mounting the IRIG's, PIPA's and the associated electronics are bored in the block. The stable member inputs and outputs are routed through a 40-contact slipring on each end of the inner gimbal axis (IGA). Angular data are transmitted by multispeed transmitter resolvers (1X and 16X), which supply 800-cps signals to the CDU's. A gyro error resolver, mounted on the negative end of the IGA, is used in the stabilization loop to transform gyro error into gimbal axis error. A d-c torque motor, mounted on the positive end of the axis, is used in the stabilization loop to position the stable member.

Middle Gimbal Assembly. The middle gimbal (MG) is suspended by two intergimbal assemblies inside the outer gimbal. The MG supports the inner gimbal. Each intergimbal assembly provides 360 degrees of freedom. However, to avoid gimbal lock, rotation is restricted within +85° and -85°. Each intergimbal assembly contains a duplex-pair ball bearing (one fixed; one floated) and a 40-contact slipring for routing electrical inputs and outputs. A multispeed transmitter resolver, mounted on the negative end of the middle gimbal axis (MGA), transmits angular data. A d-c torque motor is mounted on the opposite end of the axis.

Outer Gimbal Assembly. The outer gimbal (OG) is similar to the MG; it is suspended inside the supporting case by two intergimbal assemblies. Each intergimbal assembly provides 360 degrees of freedom for the outer gimbal axis (OGA). Each intergimbal assembly contains a duplex-pair ball bearing (one fixed, one floated), and a 50-contact slipring for routing electrical inputs and outputs. A multispeed transmitter resolver (1X and 16X) is mounted on the negative end of the OGA. A d-c torque motor is mounted on the opposite end of the axis. Two thermostatically controlled axial-flow blowers mounted in the outer gimbal walls move air from the vicinity of the middle gimbal to the walls of the case, where heat is carried away by water-glycol solution circulating through passages in the case.

IMU Case. The IMU case is a spherical enclosure, which supports the inner, middle, and outer gimbals. The outside diameter of the case is approximately 12.5 inches. The walls of the case contain coolant passages through which a water-glycol solution is circulated to dissipate heat generated by inertial components and electronic modules. Two quick-disconnect fittings connect the coolant passages to the primary coolant loop of the ECS heat transport section.

IMU Temperature Control Assembly. (See figure 2.1-25.) The IMU temperature control assembly maintains the temperature of the three IRIG's and three PIPA's within required limits during IMU standby and operating modes. The assembly supplies and removes heat, as required, to maintain IMU heat balance with minimum power consumption. Heat is removed by convection, conduction, and radiation. The natural convection, used during the IMU standby mode, is changed to blower-controlled forced

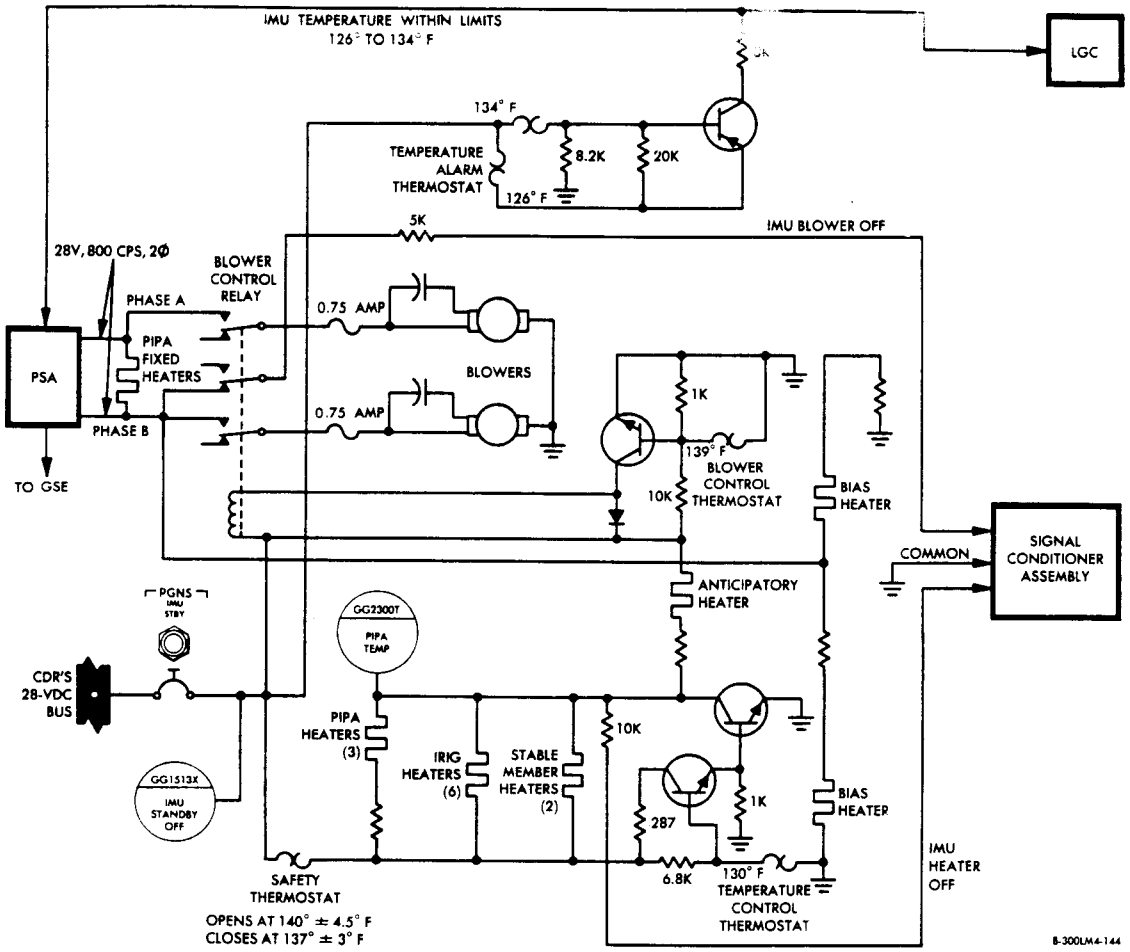

Figure 2.1-25. IMU Temperature Control

convection during IMU operating modes. Forced convection between the middle gimbal and the water-glycol-cooled gimbal case is shown in figure 2.1-26. The IMU is sealed to maintain internal air pressure at 1 atmosphere to provide the required natural and forced convection. The temperature control assembly consists of a temperature control circuit, a blower control circuit, and a temperature alarm circuit.

The temperature control circuit applies the required nominal heat (+130° ± 4°F) to the inertial components. This circuit includes six IRIG end-mount heaters, three PIPA end-mount heaters, a temperature control thermostat assembly mounted on the stable member, two stable member heaters, an anticipator heater, and a temperature control module that turns the heaters on and off, as necessary. There are three additional PIPA end-mount heaters; these are not controlled by the control module, but operate continuously when 28-volt, 800-cps IRIG power is applied. Power for the other heaters is 28 volts dc.

The blower control circuit removes heat, as required, to maintain heat balance. This circuit includes a blower control thermostat assembly mounted on the stable member, two axial blowers mounted on the outer gimbal, and a blower control module that turns the blowers on and off, as necessary. The blowers are turned off when temperature exceeds +139° ± 0.2°F; they do not operate during the IMU standby mode.

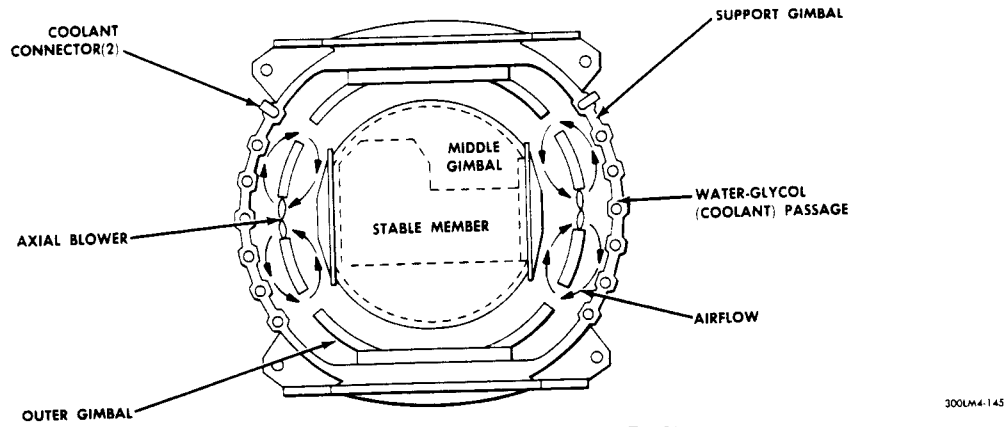

Figure 2.1-26. IMU Forced Convection Cooling

The temperature alarm circuit monitors the temperature control assembly. The alarm circuit contains an alarm thermostat for high-temperature sensing (>+134°±0.2° F), an alarm thermostat for low-temperature sensing (<+126°±0.2° F), and a temperature alarm module that provides a discrete to the LGC during normal-temperature operation (+126° to +134°±0.2° F). When an out-of-limit temperature occurs, the TEMP light on the DSKY goes on.

IMU Failure-Detection Assembly. The IMU failure-detection circuits monitor the 800-cps phase B power supply, 3,200-cps power supply, inner gimbal servo error, middle gimbal servo error, and outer gimbal servo error. When a malfunction occurs, the failure-detection circuits provide an IMU failure signal to the LGC. The LGC processes the failure signal and routes it through the DSKY as an ISS warning indication to the warning indicators on panel 1. An IMU temperature out-of-limit condition routes a signal through the LGC to the DSKY to turn on the TEMP condition indicator.

2.1.4.1.3 Coupling Data Unit. (See figure 2.1-27.)

The CDU performs analog-to-digital conversion, digital-to-analog conversion, moding, and failure detection. It is a sealed container, which encloses 34 modules of 10 types. The 10 types of modules make up five almost identical channels: one each for the inner, middle, and outer gimbals and one each for the RR shaft and trunnion gimbals. Several CDU modules are shared by all five channels.

Analog-to-Digital Conversion. Analog signals are received by the CDU from the IMU or the RR 1X and 16X resolvers. The magnitude of these signals is indicative of the degree of angular displacement.

The five channel inputs are phase-shifted and attenuated by the switching logic and coarse-fine mixing circuit. The signals are used as an input to an error-detector circuit. The error detector monitors the phase and amplitude of the 800-cps error output of the mixing and attenuation circuit. The phase of the signal determines whether the digital signal to be generated is positive or negative. The amplitude of the signal determines whether the digital pulses, equivalent to 20 arc seconds of gimbal displacement, are generated at 800 pps or 12.8 kpps. The digital pulse train is the input to a 16-bit binary read counter.

The read counter, with binary stages designated as 2^0 to 2^{15}, counts the pulse train generated by the rate select and up-down logic circuitry. The 2^0 (least significant) bit output is transmitted to the LGC as a gimbal angle change ($\Delta\theta_c$) equivalent to 40 arc seconds. This is the only information pertaining to gimbal angles or angle changes that is transmitted from the CDU to the LGC. During the ISS coarse-alignment mode of operation, a $\Delta\theta_g$ of 160 arc seconds per pulse is transmitted from the 2^2 output stage to the error counter of the CDU. The two stages (2^0 and 2^5) and the remainder of the read counter permit accumulation of the gimbal angle, with the least significant bit equivalent to 20 arc seconds of gimbal angle and the most significant bit (2^{15}) equivalent to 180° of gimbal displacement. The read counter can accumulate a total gimbal angle of 359°59'40'. The contents of the read counter are not accessible for readout or display at any time.

The primary function of the read counter is to provide the incremental ψ angles to be used in the coarse-fine mixing and switching logic for mechanization of the trigonometric identity sin $(\theta - \psi)$. When the read counter has accumulated value ψ equal to the angle ϕ, the input to the error detector is nulled and the read counter does not receive additional input pulses until a change in gimbal angle occurs. During certain ISS modes of operation, the read counter receives a reset pulse that sets the counter to zero.

This command is generally given when the system is energized, to permit the gimbals and the read counter to come into agreement with each other before using the gimbal angle information stored in the computer.

Digital-to-Analog Conversion. The error counter, a nine-bit (2^0 to 2^8) counter, is used primarily in the conversion of digital data to its analog equivalent. With only one exception, coarse alignment, the error counter is operated solely from LGC input data. Each pulse into the error counter, whether from the LGC or from the read counter, is equivalent to 160 arc seconds of gimbal angle displacement or attitude error. The counter must be enabled by an error-counter enable discrete from the LGC. When attitude error is to be displayed, the counter accumulates the pulse train from the LGC and maintains that value until the LGC either counts the value down or removes the error-counter enable discrete. In the coarse-alignment mode of operation, the read counter, as it accumulates increasing gimbal angles due to a coarse repositioning of the gimbal, can cause the contents of the error counter to decrease toward zero.

When the binary stages of the error counter are switched, switches in the 800-cps ladder network of the digital-to-analog converter are opened or closed. As the ladder switches are closed, an 800-cps analog signal, whose amplitude is proportional to the contents of the error counter and whose phase is determined by a positive or negative value stored in the error counter, is generated in the digital-to-analog converter. If the LGC moding control has selected a coarse-alignment or attitude error display mode, the 800-cps signal is used without conversion to dc. If the error counter contents are indicative of an LGC-calculated forward and lateral velocity signal, the 800-cps, 0- or π-phase signal is converted from ac to dc for use as a display drive signal.

Moding. The moding section of the CDU receives the following discretes from the LGC:

- ISS CDU zero
- ISS error-counter enable
- RR CDU zero
- RR error-counter enable
- ISS coarse alignment
- Display inertial data (DID).

The DID command is routed to the LGC and the CDU moding section by setting the MODE SEL switch to PGNS. The LGC discretes are buffered and processed, by the moding section, to the proper logic levels and timing for use in other sections of the CDU. The CDU zero discrete resets the read counter to zero. Upon termination of the discrete, the read counter again accumulates the number of pulses equivalent to the actual gimbal angle. The CDU zero discrete, besides being used in the CDU, is sent to the AGS to initialize the PGNS angle input registers and start accumulation of PGNS alignment signals.

Failure Detection. Failure-detection circuits monitor CDU circuitry for malfunctions. The failure-detection circuits monitor ISS CDU channel performance and RR CDU channel performance; they operate identically for both. Upon detection of an out-of-tolerance condition, an ISS CDU failure or RR CDU failure discrete is issued to the LGC. The ISS CDU failure discrete causes the LGC to issue a failure discrete to the caution and warning electronics for display. A RR CDU failure discrete causes the TRACKER condition indicator on the DSKY to go on.

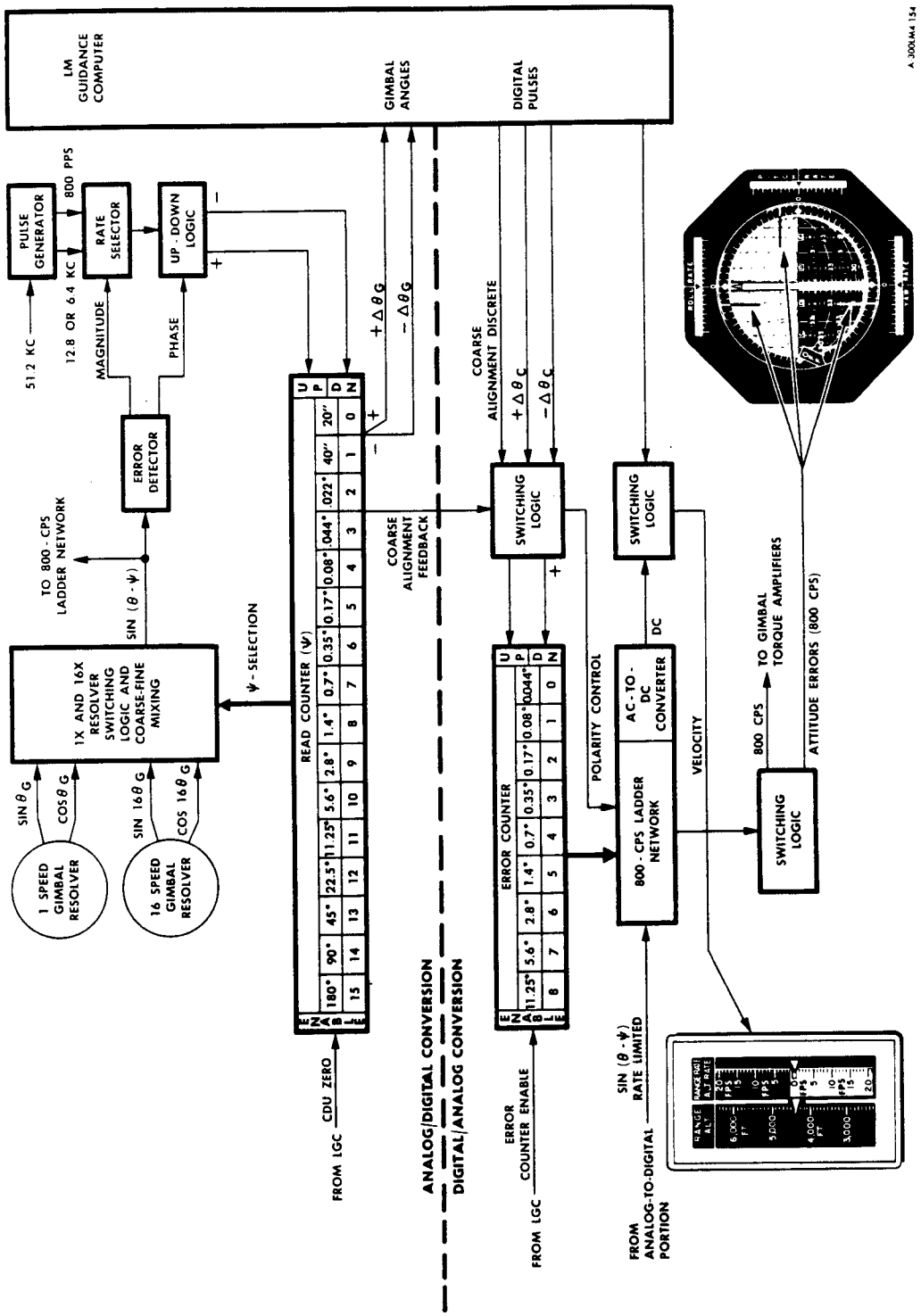

Figure 2.1-27. CDU Digital-to-Analog and Analog-to-Digital Conversion - Functional Diagram

GN&

2.1.4.1.4 Pulse Torque Assembly.

The PTA consists of 17 electronic modular subassemblies mounted on a common base. There are four binary current switches. One furnishes torquing current to the three IRIG's and the other three furnish torquing current to the three PIPA's. The four d-c differential amplifier and precision voltage reference subassemblies regulate torquing current supplied through the binary current switches.

The three a-c differential amplifier and interrogator subassemblies amplify accelerometer signal generator signals and convert them to plus and minus torque pulses. The gyro calibration module applies plus or minus torquing current to the IRIG's when commanded by the LGC. The three PIPA calibration modules compensate for the differences in inductive loading of accelerometer torque generator windings and regulate the balance of plus and minus torque. A pulse torque isolation transformer couples torque commands, data pulses, interrogate pulses, switching pulses, and synchronizing pulses between the LGC and PTA. Power for the other 16 subassemblies is supplied by the pulse torque power supply.

2.1.4.1.5 Power and Servo Assembly.

The PSA provides a central point for the PGNS amplifiers, modular electronic components, and power supplies. The PSA is on the cabin bulkhead behind the astronauts. It consists of 14 subassemblies mounted to a header assembly. Connectors and harnesses are integral to the header assembly. A thin cover plate, mounted on the PSA, hermetically seals the assembly. During flight, this permits pressurization of the PSA to remain at 15 psi.

The three gimbal servoamplifiers supply the torquing signals for the IMU gimbals. IMU moding is accomplished by the relay module. A -28-volt d-c power supply supplies power to the gimbal servoamplifiers and pulse torque power supply. The PSA contains one amplifier and one automatic amplitude control, filter, and multivibrator subassembly for the 3,200-cps, 1% power supply. The amplifier supplies 28 volts, 3,200 cps, to the ducosyn transformer on the stable member and to the gimbal servoamplifiers; the automatic amplitude control, filter, and multivibrator subassembly regulates amplifier operation.

An amplifier and an automatic amplitude control, filter and multivibrator subassembly is also associated with the 800-cps power supply. This amplifier supplies 28 volts, 800 cps, for IMU resolver excitation and provides a reference signal for an 800-cps, 5% amplifier, which in turn provides a reference for another 800-cps, 5% amplifier. These two amplifiers, 90° apart in phase, supply 28 volts, 800 cps, for the IMU blowers, gyro wheels, and the PIPA heaters. The IMU load compensation subassembly provides power-factor correction for 800-cps, 1%, and 5% supplies. The 28-volt IMU operate power from the CDR's 28-volt d-c bus is filtered by the PGNS supply filter subassembly.

The IMU auxiliary subassembly indicates to IS an out-of-tolerance condition of 3,200-cps; the 28-volt, 800-cps, 1%; and the 28-volt, 800-cps, 5%; and the gimbal error signals; provides IMU turn-on moding discretes; and indicates IMU temperature out-of-tolerance condition to GSE through the umbilical of the launch tower (LUT).

2.1.4.1.6 Signal Conditioner Assembly.

The SCA preconditions PGNS measurements to a 0- to 5-volt d-c format before the signals are routed to the IS. There are three types of SCA output signals: PB, PU, and PD. The PB type are preconditioned analog signals derived from a bipolar signal. The PU type are preconditioned analog signals derived from a unipolar signal. The PD type are preconditioned bilevel discretes. The PB type identifies signals that are referenced to the 2.5-volt d-c bias supply. The SCA consists of four signal-conditioning modules, which are listed, with signal description and telemetry number, in table 2.1-2. The SCA is mounted piggyback on the PSA.

The gimbal resolver signal-conditioning module conditions the inner, middle, and outer gimbal resolver sine and cosine signals.

The IRIG and PIPA signal-conditioning module conditions the inner, middle, and outer gimbal IRIG error signals and the X-, Y-, and Z-PIPA error signals. This module also generates a 3,200-cps, square-wave reference signal required to operate the SCA circuits.

Table 2.1-2. Signal Conditioner Assembly - Signal-Conditioning Modules

Signal-Conditioning Module	Signal Description	Telemetry No.
Gimbal resolver	Sine of IG 1X resolver output	GG2112V
	Cosine of 1G 1X resolver output	GG2113V
	Sine of MG 1X resolver output	GG2142V
	Cosine of MG 1X resolver output	GG2143V
	Sine of OG 1X resolver output	GG2172V
	Cosine of OG 1X resolver output	GG2173V
IRIG and PIPA	IG IRIG error	GG2107V
	MG IRIG error	GG2137V
	OG IRIG error	GG2167V
	X-PIPA signal generator output	GG2001V
	Y-PIPA signal generator output	GG2021V
	Z-PIPA signal generator output	GG2041V
	3,200 cps, 28-volt supply	GG1331V
CDU, PIPA temperature, and 2.5-vdc bias	Pitch CDU digital-to-analog output	GG2219V
	Yaw CDU digital-to-analog output	GG2249V
	Roll CDU digital-to-analog output	GG2279V
	IMU standby/off	GG1513X
	PIPA temperature	GG2300T
	LGC operate	GG1523X
	PCM 2.5-vdc TM bias	GG1110V
	IMU 28-volt, 800-cps, 1%	GG1201V
Radar resolvers and 120-volt PIPA supply	Sine of RR shaft 1X resolver output	GG3304V
	Cosine of RR shaft 1X resolver output	GG3305V
	Sine of RR trunnion 1X resolver output	GG3324V
	Cosine of RR trunnion 1X resolver output	GG3325V
	120-vdc pulse torque reference	GG1040V

The CDU, PIPA temperature, and 2.5-volt d-c bias signal-conditioning module conditions the pitch, roll, and yaw CDU digital-to-analog converter outputs, the PIPA temperature sensor signal, ISS 28-volt standby power, and 800-cps 1% amplifier output. This module also supplies the 2.5-volt d-c bias for the bipolar measurements.

The radar resolvers and 120-volt PIPA supply signal-conditioning module conditions the sine and cosine signals from the shaft and trunnion 1X resolvers of the RR antenna assembly, and the 120-volt output of the pulse torque power supply. This module also supplies an 800-cps, square-wave reference signal to the SCA circuits.

2.1.4.1.7 Inertial Subsection - Functional Loops.

There are seven functional loops: three stabilization loops, a gyro-torquing loop, and three accelerometer loops. The three stabilization loops maintain the stable member rotationally fixed with respect to inertial space. The stable member is used as the reference to maintain the orientation of the accelerometers with respect to the inertial frame of reference and as an attitude reference for the LM. The gyro-torquing loop permits introduction of external driving signals into the stabilization loops during closed-loop conditions. The three accelerometer loops measure the acceleration of the stable member

along three orthogonal axes and integrate these data to determine velocity. The LGC uses the velocity data to compute LM trajectory. The accelerometer loops also generate torquing signals for torquing the PIPA's back to a null position after sensing an acceleration.

Stabilization Loops. (See figure 2.1-28.) When the stabilization loops hold the stable member inertial referenced, any movement of the stable member is sensed by one or more of the three IRIG's. This results in an IRIG-signal-generator, 3,200-cps, error-signal output, which is proportional to the rotation of the gyro about its input axis. This error signal is then amplified by a preamplifier, which is an integral part of the IRIG assembly. The Y-gyro error signal passes directly to the associated gimbal servoamplifier through the normally closed contacts of the coarse-alignment relay. The X- and Z-gyro error signals are resolved about the IGA by the gyro error resolver before being introduced to the associated gimbal servoamplifiers. The servoamplifier current output is fed to the appropriate gimbal torque motor to restore the stable member to its original reference position. As the stable member is returned to its original reference position, the movement sensed by the IRIG is opposite in direction but equal in magnitude to the disturbance input; the result is precession of the float. Due to precession, the float returns to its null position. Because no signal-generator output is then present, the loop is nulled and no further drive signals are applied until another disturbance is introduced.

Resolution of the X- and Z-gyro error signals is required because motion about the MGA or the OGA, with the stable member at some angle other than 0°, is sensed by the X-gyro and Z-gyro. The resolver then sums the components of gyro error that lie along the MGA or OGA and directs the gyro errors to the applicable gimbal servoamplifier.

When the stabilization loops are initially energized, the stable member is referenced to the LM axes by driving the gimbals with an error signal inserted at the coarse-alignment input to the gimbal servoamplifiers (coarse-alignment relay energized). If a specific inertial reference is desired, the stable member is aligned to the desired orientation, using the stabilization loops. The alignment is accomplished in two steps: coarse-alignment moding and fine-alignment moding. During coarse alignment, the gyro error signals are disconnected from the gimbal servoamplifiers. Instead, 800-cps error signals are injected through the coarse-alignment relay to torque the gimbals to approximately the desired position. For fine alignment of the stable member, the coarse-alignment relay is deenergized and gyro error signals are injected in the loops for additional gimbal torquing. The gyro error signals are generated by torquing the IRIG's with pulses originating at the LGC and processed through the pulse torque or fine-alignment electronics loop. The stable member is then aligned and the stabilization loops hold it in this final position.

Gyro-Torquing Loop. (See figure 2.1-28.) Using a torque generator to torque the IRIG floats, it is possible to drive the IMU gimbals to new positions. This permits fine alignment of the stable member to a desired reference with considerable accuracy. When gyro torquing is required during the fine-alignment mode of operation, the LGC issues pulses, which are controlled by program 52, that:

- Enable the torquing electronics
- Select the gyro to be torqued
- Select the direction of torquing
- Control the amount of torque applied.

The three IRIG's are sequentially torqued by the LGC during fine alignment; it is possible for all three gyros to be controlled through one set of torquing electronics. The torquing electronics consists of a gyro calibration module, a binary current switch, a d-c differential amplifier and precision voltage reference module, and a pulse torque power supply module.

Basically, the gyro-torquing loop operates by applying a constant current to the torque windings in the IRIG. When torque pulses and gyro select pulses are initiated by the LGC, a constant direct current is applied to an IRIG and the float is torqued a specific amount; a specific amount of IMU gimbal rotation is provided. The number or torque (set) pulses applied to the current switch determines how long the torquing current is applied. The gyro select pulses enable a switching network (in the gyro calibration module), which closes a current path through a specific winding in a specific gyro for positive or negative torquing of the float. Before and after torquing, the LGC issues no-torque (reset) pulses to the current switch,

which enables constant current to flow along a dummy path external to the IRIG's. This reduces transients when torquing is initiated. The torquing loop is enabled by an LGC command, which energizes a relay to apply power to the loop. The constant-current supply consists of the d-c differential amplifier, the pulse torque power supply, and a current regulator in the binary current switch.

Accelerometer Loops. (See figure 2.1-28.) The three accelerometer loops are identical. The pulse torque power supply provides +20, -20, and +120 volts dc and +28 volts dc, regulated, to all the loops.

The PIPA signal generator outputs are two 3,200-cps error signals, which are of opposite phase and proportional to the rotation of the pendulum about its output axis. These error signals are amplified by the preamplifier and, then, routed to the a-c differential amplifier. There, the two signals are summed; the resultant is amplified and, then, phase split. The two resulting signals are of opposite phase; they are fed to the interrogator circuitry, which determines the direction of pendulum movement and generates positive or negative commands indicative of the direction of movement. The interrogate and switching pulses from the LGC are used to generate the positive or negative torque pulses to the binary current switch.

The binary current switch uses the interrogator outputs to generate torquing current (to torque the pendulums back to null) and pulses that represent velocity changes. The velocity pulses are generated by providing data pulses from the LGC such that the velocity outputs are positive or negative increments of velocity. The torquing current is generated in a manner similar to that used in the gyro-torquing loop. The constant-current supply consists of a d-c differential amplifier and precision voltage reference and a current regulator. Constant current is supplied to the binary current switch. A positive or negative input command turns on the positive or negative current switch, routing a positive or negative torque signal to the torque windings in the PIPA. The torquing current is fed to the PIPA torque generator through a load-balancing network in the calibration module. This ensures that for a given amount of torquing current an equal amount of torque is developed in the positive or negative direction.

When the accelerometer loops operate, a certain amount of PIPA torquing occurs at all times, even during periods of no acceleration. This torquing continuously moves the pendulums an equal amount in the positive and negative directions; as a result, an equal amount of positive or negative velocity pulses are sent to the LGC. When an acceleration is sensed, more of one type of pulse is generated. This unbalance produces either positive or negative ΔV pulses, which are routed to the LGC PIPA counter to be accumulated as LM velocity changes.

2.1.4.1.8 Inertial Subsection - Modes of Operation. (See figure 2.1-29.)

Except for the IMU cage and inertial reference modes, the modes are controlled by the CDU as commanded by the LGC. The IMU cage mode is initiated when the IMU CAGE switch (panel 1) is set to ON. The inertial reference mode is entered automatically whenever the ISS is not in another mode. The CDU logic receives from the LGC the following discrete commands:

- ISS CDU zero
- ISS error-counter enable
- Coarse-align enable
- RR CDU zero
- RR error-counter enable
- Display inertial data (DID) (program-controlled).

The ISS CDU zero, ISS error-counter enable, and ISS coarse-align enable discretes control three identical channels in the ISS portion of the CDU. The RR CDU zero, RR error-counter enable, and DID discretes control the RR shaft and trunnion channels in the RR portion of the CDU. All discretes, except RR CDU zero, are used for moding operations. In addition to the LGC-CDU discretes, the LGC issues a torque enable command to the gyro-torquing loop for initation of the fine-alignment mode.

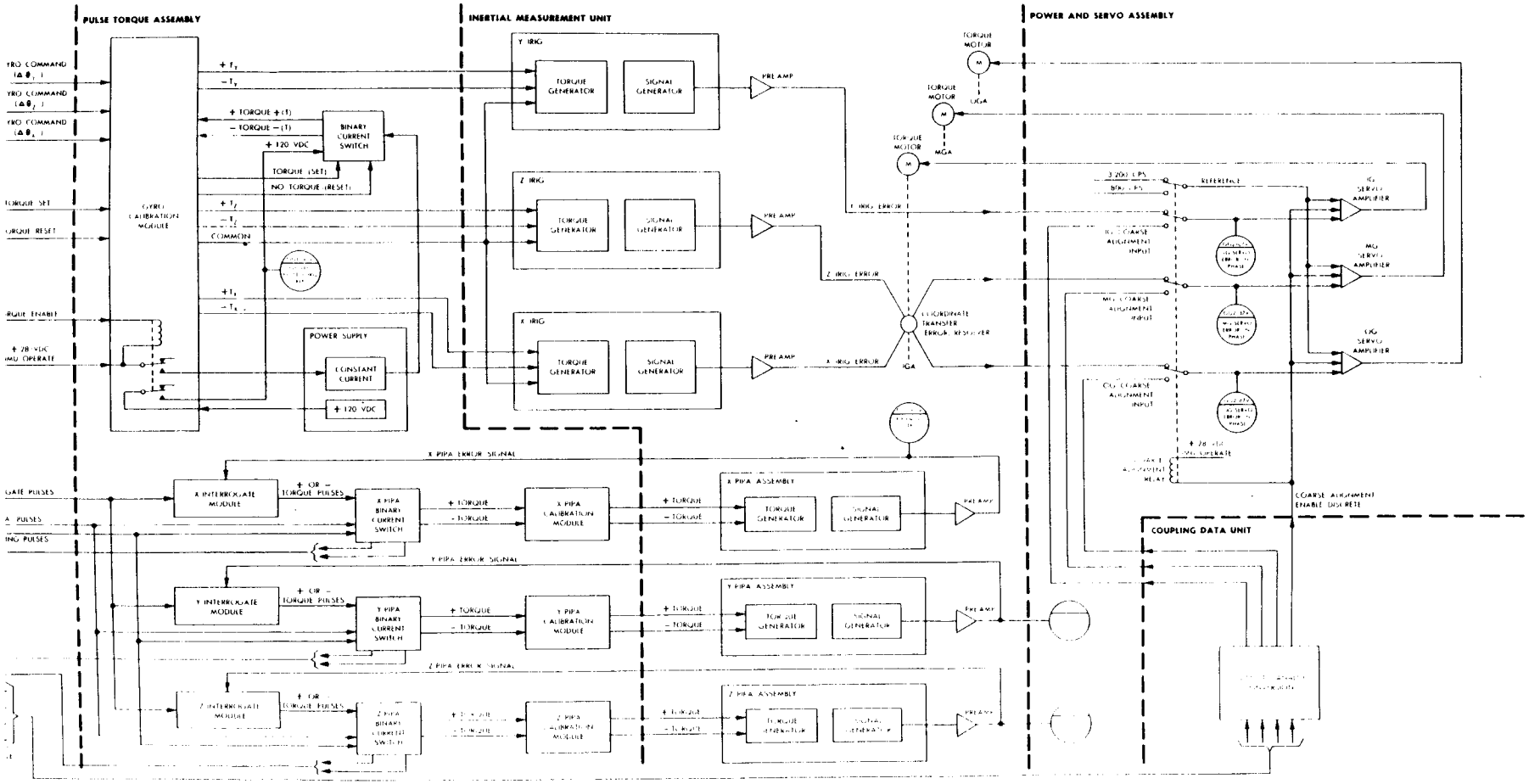

Figure 2.1-28. Inertial Subsystem - Functional Loops

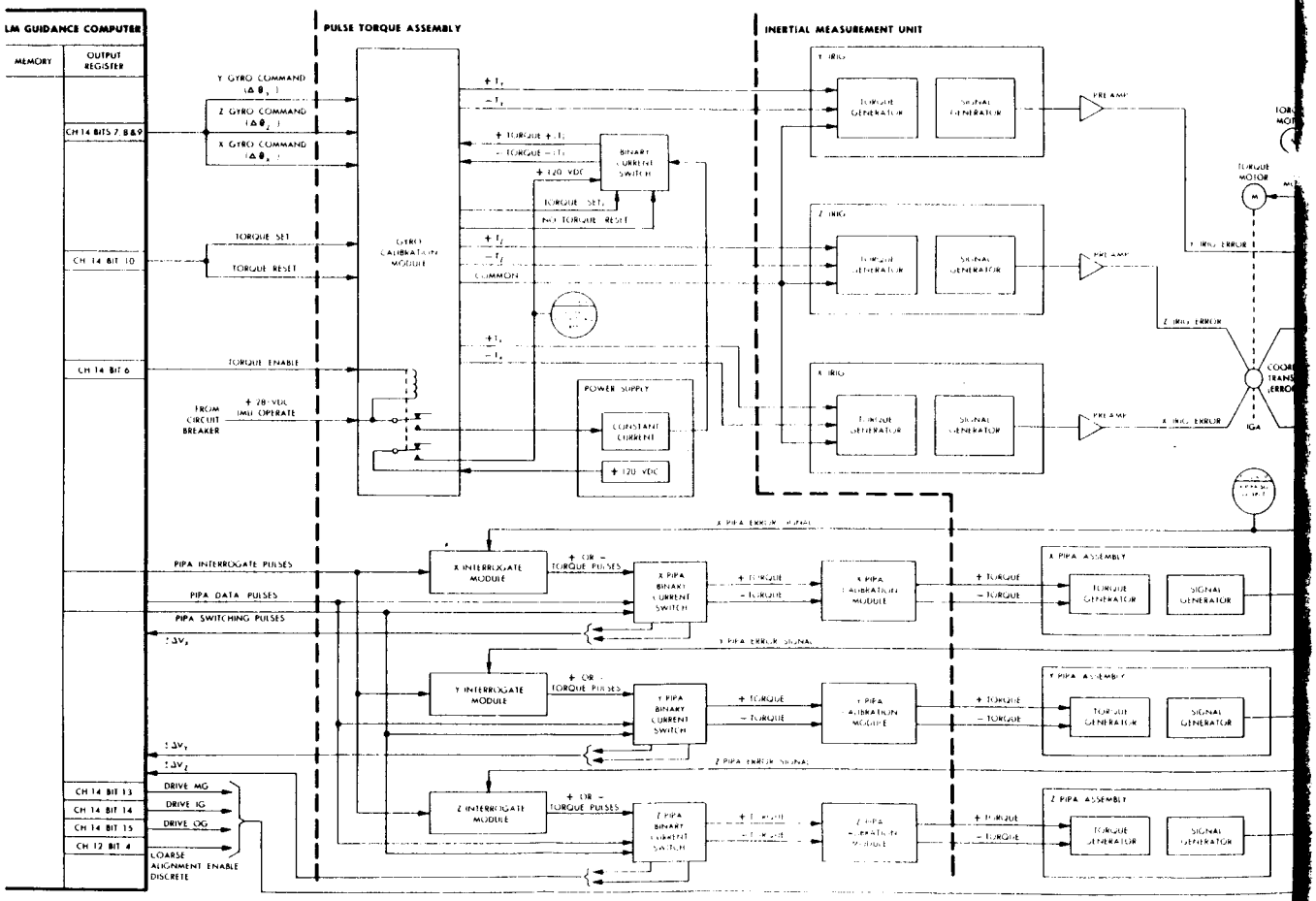
LM GUIDANCE COMPUTER
MEMORY
OUTPUT REGISTER
PULSE TORQUE ASSEMBLY
INERTIAL MEASUREMENT UNIT
Y GYRO COMMAND
Z GYRO COMMAND
X GYRO COMMAND
CH 14 BITS 7, 8 & 9
TORQUE SET
TORQUE RESET
CH 14 BIT 10
TORQUE ENABLE
CH 14 BIT 6
FROM CIRCUIT BREAKER
+28-VDC IMU OPERATE
GYRO CALIBRATION MODULE
BINARY CURRENT SWITCH
+120 VDC
TORQUE SET
NO TORQUE RESET
COMMON
POWER SUPPLY
CONSTANT CURRENT
+120 VDC
Y IRIG
Z IRIG
X IRIG
TORQUE GENERATOR
SIGNAL GENERATOR
PREAMP
TORQUE MOTOR
Y IRIG ERROR
Z IRIG ERROR
X IRIG ERROR
IGA
X PIPA ERROR SIGNAL
PIPA INTERROGATE PULSES
PIPA DATA PULSES
PIPA SWITCHING PULSES
X INTERROGATE MODULE
X PIPA BINARY CURRENT SWITCH
X PIPA CALIBRATION MODULE
X PIPA ASSEMBLY
Y PIPA ERROR SIGNAL
Y INTERROGATE MODULE
Y PIPA BINARY CURRENT SWITCH
Y PIPA CALIBRATION MODULE
Y PIPA ASSEMBLY
Z PIPA ERROR SIGNAL
Z INTERROGATE MODULE
Z PIPA BINARY CURRENT SWITCH
Z PIPA CALIBRATION MODULE
Z PIPA ASSEMBLY
+ TORQUE
− TORQUE
CH 14 BIT 13
CH 14 BIT 14
CH 14 BIT 15
CH 12 BIT 4
DRIVE MG
DRIVE IG
DRIVE OG
COARSE ALIGNMENT ENABLE DISCRETE

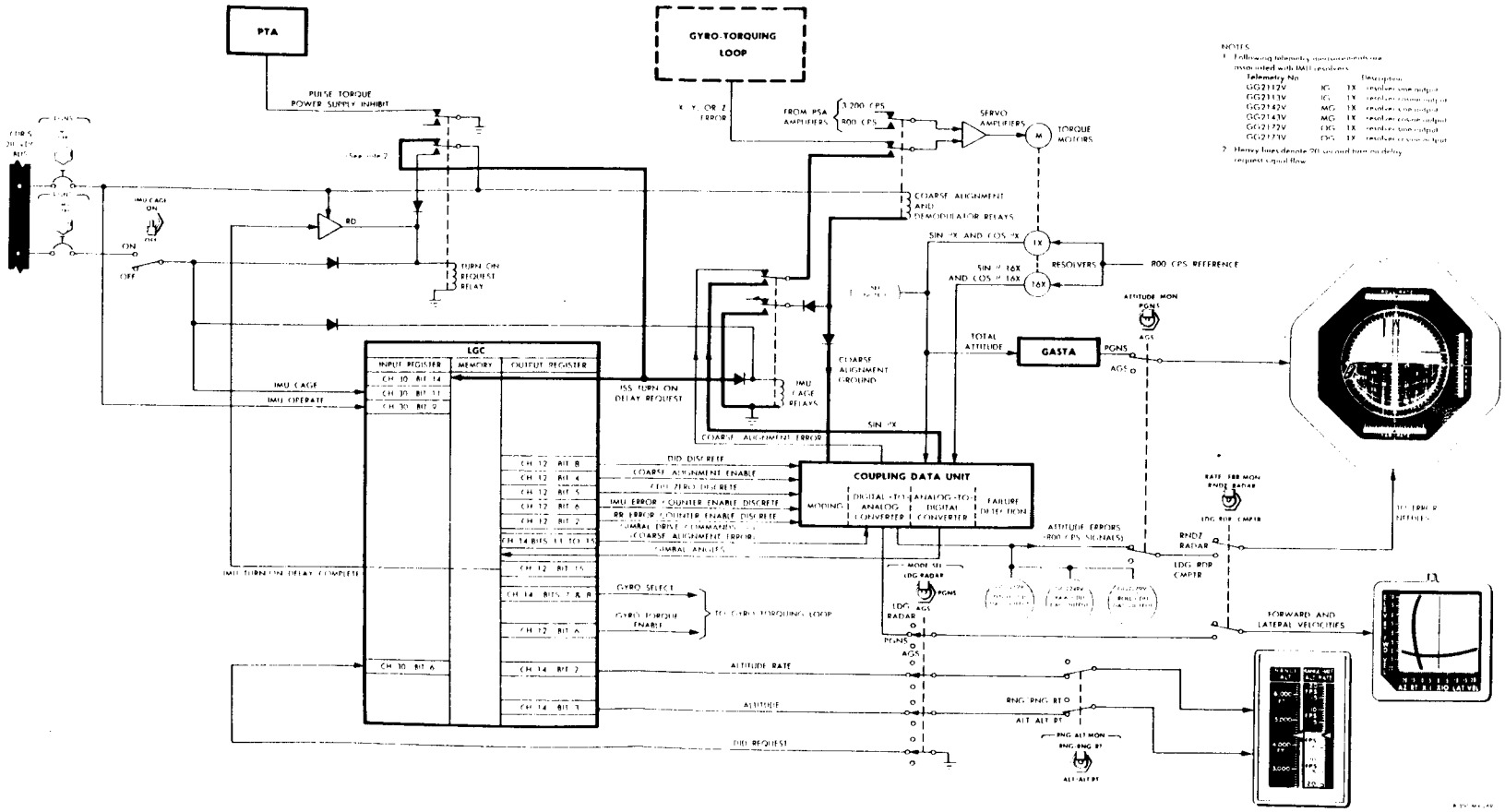

NOTES:

1. Following telemetry measurements are associated with IMU resolvers:

Telemetry No			Description
GG2112V	IG	1X	resolver sine output
GG2113V	IG	1X	resolver cosine output
GG2142V	MG	1X	resolver sine output
GG2143V	MG	1X	resolver cosine output
GG2172V	OG	1X	resolver sine output
GG2173V	OG	1X	resolver cosine output

2. Heavy lines denote 20 second turn on delay request signal flow.

Figure 2.1-29. Inertial Subsection - Modes of Operation

IMU Turn-On Mode. The IMU turn-on mode initializes ISS operation by driving the IMU gimbals to zero and clearing and inhibiting the CDU read and error counters. The IMU turn-on mode (program controlled) is initiated by applying IMU operate power to the ISS. The LGC issues the two discretes required for this mode: CDU zero and coarse align enable. The LGC also issues the turn-on delay complete discrete to the ISS after 90 seconds.

When IMU power is applied to the ISS, the LGC receives an ISS power-on discrete and a turn-on delay request. The LGC responds to the turn-on delay request by issuing the CDU zero and coarse-align enable discretes to the CDU. To prevent PIPA torquing for 90 seconds during the IMU turn-on mode, an inhibit signal is applied to the pulse torque power supply. The CDU zero discrete clears and inhibits the read and error counters of the CDU. The ISS power (28 volts dc) is applied directly to the coarse-alignment relay, and through the deenergized contacts of the turn-on control relay to energize the cage relay. A ground is provided through the contacts of the energized cage relay to the coil of the coarse-alignment relay, energizing the coarse-alignment relay. The contacts of the energized coarse-alignment relay switch the gimbal servoamplifier reference from 3,200 cps to 800 cps and close the IMU cage loop through the contacts of the energized cage relay.

The coarse-alignment relay is held energized by the CDU coarse-align discrete and the contacts of the energized cage relay. The IMU gimbals drive to the zero reference position, using the sine output of the 1X gimbal resolvers (sine θ).

After 90 seconds, the LGC issues the ISS turn-on delay complete discrete, which energizes the turn-on control relay. The energized turn-on control relay locks up through its own contacts. Energizing the turn-on control relay removes the turn-on delay request and deenergizes the cage relay, removing the sine θ signal. Energizing the turn-on control relay also removes the pulse torque power supply inhibit signal. The 90-second delay permits the gyro wheels to reach their operating speed before the stabilization loops close. The pulse torque power supply inhibit signal prevents accelerometer torquing during the 90-second delay.

After the 90-second delay, the LGC program removes the CDU zero and coarse-align enable discretes, allowing the ISS to go to the inertial reference mode (coarse-alignment relay deenergized), or it can remove the CDU zero discrete and provide an error-counter enable discrete while maintaining the coarse-align enable discrete. The latter combination of discretes defines the coarse-alignment mode of operation.

Coarse-Alignment Mode. The coarse-alignment mode enables the LGC to align the IMU rapidly to a desired position, with limited accuracy. In this mode, the LGC issues two discretes to the CDU: coarse-align enable and ISS error-counter enable.

The coarse-align enable discrete is routed through the CDU, where it provides a ground path to the coarse-alignment relay, energizing the relay. The energized relay opens the gyro preamplifier output, replaces the normal 3,200-cps reference with an 800-cps reference, and routes the 800-cps coarse-alignment error output from the CDU digital-to-analog converter to the gimbal servoamplifier through the deenergized contacts of the IMU cage relays. This drives the gimbal until the coarse-alignment signal is zero volts rms. The coarse-align enable discrete and error-counter enable discrete are also accepted by the CDU logic as moding commands, enabling the error-counter and permitting transfer of $\Delta\theta g$ angles from the read counter to the error counter.

After the logic circuitry in the CDU has been set up to accept commands from the LGC, the LGC begins transmitting positive or negative gimbal drive commands (pulse trains at 3,200 cps). These pulses, each equivalent to a gimbal angle change ($\Delta\theta_C$) of 160 arc seconds, are accumulated in the error counter. The first $\Delta\theta_C$ pulse determines the direction in which the error counter is to count and provides a polarity control to the digital-to-analog converter of the CDU. The polarity control provides an in-phase or an out-of-phase analog reference. An 800-cps analog signal, whose amplitude is dependent on the error counter content and the polarity of the input command ($\Delta\theta_C$), is then generated. This signal is the 800-cps coarse-alignment error output from the digital-to-analog section; it is routed to the gimbal servoamplifier, causing the gimbal to drive in the direction commanded by the LGC.

The changing gimbal angles are detected by the error-detector circuits in the CDU. These detected errors permit a pulse train, at 6,400 pps, to increase the read counter. The increasing read counter nulls the sine and cosine voltage inputs to the error-detector circuits from the CDU 1X and 16X resolvers.

As the read counter is being incremented, one output of the counter, representing a 40-arc-second-per-pulse increase in gimbal angle, is routed to the LGC. Another output of the counter, representing 160 arc seconds per pulse, is recognized in the CDU logic as an incremental value to be entered into the error counter in a direction opposite to that of the LGC-commanded $\Delta\theta_c$. If $\Delta\theta_c$ is positive, the error counter counts up and the $\Delta\theta_g$ from the read counter decreases the counter. For each counter pulse into the error counter, the total content decreases. This decreases the digital-to-analog converter output and, therefore, the rate of drive. When the number of digital feedback pulses equals the LGC-commanded number of pulses, the error counter is empty and the digital-to-analog converter output should be zero.

The rate of drive of the gimbals during coarse alignment is limited to a maximum of 35° per second. This is due to degenerative feedback provided within the CDU mechanization.

Fine-Alignment Mode. (See figures 2.1-28 and 2.1-29.) The fine-alignment mode allows the LGC to position the IMU accurately to a predetermined gimbal angle, closer than 40 arc seconds of CDU tolerance, since each gyro-torquing pulse is equal to 0.615 arc second of displacement. The LGC does not issue any discretes to the CDU during this mode of operation; therefore, the read counter circuitry repeats the changing gimbal angles exactly as was done in the coarse-alignment mode. The LGC keeps track of the gimbal angle to within 40 arc seconds.

The commanding signals for the fine-alignment mode are issued to the time-shared fine-alignment or pulse torque electronics. The LGC first issues a torque enable discrete, which applies 28 and 120 volts dc to the binary current switch, a differential amplifier, and a precision voltage reference circuit, allowing the circuit to become operative. The current switch is reset by the no-torque pulses, allowing a dummy current, which is equal to the torquing current, to flow. This allows the current to settle to a constant value before it is used for gyro torquing. A gyro is then selected (gyro select pulses) for either (positive or negative) torquing current. After the discretes have been issued, the LGC sends torque (set) pulses or fine-alignment commands to the set side of the current switch. The pulse allows the selected torquing current (positive or negative) to flow through the gyro windings, causing the float to move. The resulting signal generator output causes the stable member to be driven through an angle equal to the command angle. The LGC receives inputs from the CDU read counter that indicate a 40-arc-second-per-pulse change in gimbal angle.

The number of torquing pulses sent from the LGC to the torquing electronics is computed on the basis of gimbal angle at an instant of time and a desired alignment angle. The difference is converted into the number of pulses necessary to drive the gimbal through the difference angle. The required number of fine-alignment pulses is computed only once; it is not recomputed on the basis of gimbal angle after the desired number of pulses have been sent. Fine-alignment loop operation is open-loop as far as the LGC is concerned; the $\Delta\theta_g$ pulses are not used for feedback.

The fine-alignment pulses generated by the LGC are issued in bursts of 3,200 pps. The fine-alignment electronics permits the torquing current to be on in the direction chosen by LGC logic, for the duration of the pulse burst. When the LGC is not issuing fine-alignment pulses or the gyro floats are not being torqued, the stable member can be considered inertially referenced.

Attitude Error Display Mode. The attitude error display mode permits the LGC to display attitude errors, in analog form, to the astronaut. In this mode, CDU error-counter enable discrete is generated by the LGC. The LGC is informed of the gimbal angle and any changes to it by the read counter and the analog-to-digital converter associated with it. The read counter output is routed through logic to the LGC, which is then aware of the current LM attitude.

A digital autopilot program (DAP) has a computed desired attitude associated with current time and LM position. The difference between the desired and actual values is attitude error. The attitude error is converted to $\Delta\theta_c$ pulses (each equivalent to 160 arc seconds of error), which are fed to the error counter at a rate of 3,200 pps. The error counter is incremented to contain the number of pulses commanded. The contents of the error counter are converted to an 800-cps error signal by the digital-to-analog converter. The phase of the digital-to-analog converter output depends on whether the input command is a positive or negative.

The 800-cps attitude errors have a maximum amplitude of 5 volts rms, zero or π phase. They are displayed by the FDAI attitude error needles. Digital feedback from the read counter to the error counter is disabled during this mode of operation; only the LGC-generated $\Delta\theta_C$ commands increase or decrease the error counter. Total LM attitude can also be displayed in the FDAI. This information is taken from the gimbal angle 1X resolver sine and cosine windings. Pitch, yaw, and roll can be displayed from the inner, outer, and middle gimbals, respectively, after being processed by the GASTA.

Display Inertial Data Mode. The DID mode is program controlled. This mode is initiated by setting the MODE SEL switch (panel 1) to PGNS. This arms the DID relay in the CDU and provides an input discrete to the LGC, requesting the DID program.

The LGC, upon recognition of the input discrete, issues a DID discrete to the CDU. This energizes the same DID relay, completing the interface between the CDU digital-to-analog converter and the X-pointer indicators (panels 1 and 2). The LGC also issues a RR error-counter enable discrete and an ISS error-counter enable discrete to the CDU. This enables all five CDU error counters, of which three (ISS error counters) are used for attitude error display; two (RR error counters), for forward and lateral velocity display.

Attitude error is displayed in the same manner as in the attitude error display mode. The ISS read counters repeat the gimbal angle changes and provide $\Delta\theta_g$ commands to the LGC, which then determines the attitude error. The attitude error is converted to a pulse train, which increases the CDU ISS error counters. The contents of the counters are converted to analog signals, which are fed to the FDAI for display. The read counter input to the error counter is inhibited, allowing the error counters to be increased or decreased only by the LGC.

For forward and lateral velocity display, the LGC receives positive and negative pulses from the ISS accelerometer loops and velocity data from the LR. On the basis of calculations derived from this information, the LGC increments the CDU RR error counters with $\Delta\theta_C$ commands, which are proportional to LM forward and lateral velocity. The contents of the error counters are converted to analog signals in the digital-to-analog conversion section. The resulting positive or negative d-c voltages are routed through the energized DID relay, the MODE SEL switch, and to the cabin displays. The CDU RR error counters operate independently of the read counter circuitry; therefore, the condition of the RR is immaterial for this operation. The CDU RR analog-to-digital sections are not affected by this mode, but may be used for RR antenna position readout, if required. Altitude or altitude rate is also displayed during this mode. The LGC calculates the altitude/altitude rate and sends this data directly to the ALT and ALT RATE indicators (panel 1) via the MODE SEL switch and the RNG/ALT MON switch (panel 1). Altitude data from the LR are supplied to the LGC to aid in this calculation.

IMU Cage Mode. The IMU cage mode is an emergency mode that enables the astronauts to recover a tumbling IMU by setting the gimbals to zero, and to establish an inertial reference. This mode can also be used to establish an inertial reference when the LGC is not activated. The IMU cage mode is initiated by holding the IMU CAGE switch to ON for sufficient time (5 seconds maximum) to allow the IMU gimbals to settle at the zero position. The IMU gimbal zeroing can be observed on the FDAI. If the mode is commanded to recover a tumbling IMU after the IMU turn-on mode is completed or to establish an inertial reference with the CSS in standby or off, holding the IMU CAGE switch to ON drives the IMU gimbals to zero. When the switch is released, the ISS enters the inertial reference mode.

Holding the IMU CAGE switch to ON energizes the cage and coarse-alignment relays, which apply the sine θ signals to the gimbal servoamplifiers, and sends an IMU cage discrete to the LGC. Releasing the switch deenergizes the cage and coarse-alignment relays. When the coarse-alignment relay is deenergized, the stabilization loops are closed. The LGC, upon receiving the IMU cage discrete, stops issuing discretes.

The IMU cage mode should not be used indiscriminately. The mode is intended only as an emergency recover function for a tumbling IMU. During the IMU cage mode, the IMU gimbal rates are sufficient to drive the gyros into their rotational and radial stops due to the lack of CDU rate limiting.

Gimbal Lock Mode. The gimbal lock mode provides the astronauts with an indication of a large middle gimbal angle and disables the stabilization loop when gimbal lock occurs. An indication is also provided to notify the astronauts that the inertial reference is lost. When the magnitude of the middle gimbal angle exceeds +70° or -70°, the LGC turns on the GIMBAL LOCK condition light on the DSKY. The light goes off as soon as the middle gimbal angle is less than +70° or -70°. If the magnitude of the middle gimbal angle increases to +85°, the LGC turns on the NO ATT condition light on the DSKY, indicating that the inertial reference is lost, and issues the coarse-alignment discrete to the CDU, which opens the stabilization loop and allows the stable member to be referenced to the LM. The astronauts can leave this mode by requesting the coarse-alignment mode via a DSKY entry.

Inertial Reference Mode. Inertial reference is considered a mode of ISS operation during any period after IMU turn-on is completed and the stabilization loops are closed (coarse-alignment relay deenergized) without any gyro-torquing occurring. The IRIG's hold the stable member inertially referenced, and the reference can be displayed on the FDAI from the gimbal angle 1X resolver sine and cosine outputs. The ISS is considered to be in the inertial reference mode of operation during any period after IMU turn-on is completed during which the ISS is not in any other of its modes. The CDU read counters continuously monitor gimbal angle changes due to LM motion and indicate to the LGC the changing angles. The error counters and the digital-to-analog converter are not used in this mode.

2.1.4.2 Primary Guidance and Navigation Section - Optical Subsection.

The AOT is used by the astronaut to take direct visual sightings and precision angular measurements of a pair of celestial objects. These measurements are transferred to the LGC by the CCRD. The LGC uses this angular information along with the prestored data to compute the LM position and velocity and to perform the fine alignment of the IMU stable member. The AOT can be set to six positions; it has a manually rotated reticle with an angular display.

2.2.4.2.1 Alignment Optical Telescope.

The AOT, mounted on the navigation base to provide a mechanical alignment and a common reference between the AOT and IMU, is a unity-power, periscope-type device with a 60° conical field of view. The AOT has a movable shaft axis (parallel to the LM X-axis) and a line-of-sight axis (approximately 45° from the X-axis).

The AOT is essentially an L-shaped device approximately 36 inches long, and consists of an upper section and an eyepiece. Structural components, such as housing and mounts, are machined from beryllium; spacers and similar parts are made of aluminum. A pressure strain seal is used to seal the cabin from space environment.

The AOT optics (figure 2.1-30) consists of two sections: shaft optics and eyepiece optics. The shaft optics section is a -5 power complex that provides a 60° field of view. The eyepiece optics section is a +5 power complex that provides shaft and trunnion angle measurements.

The inner housing, which is part of the upper section and rotates within an outer housing, contains the components of the shaft optics section. Objective and relay lenses and a prism are centrally aligned and axially located within the inner housing.

The relay lens assembly is positioned near the bottom of the inner housing with the objective lens assembly above it. The head prism and its mounting form the uppermost part of the objective lens assembly and protrude through the top of the outer housing.

The objective lenses, consisting of six spherical lens elements and one aspherical element, focus the image at the eyepiece side of the aspherical field lens. The aspherical field lens collects the light rays and transmits them to the relay lenses. Image diameter at the first focal plane is approximately 6×10^{-4} inches. The relay lens assembly transfers and focuses the image at the second focal plane located at the AOT reticle. The aperture between the lens cells functions as a field stop, limiting the field of view to 60°. The head prism is fixed in elevation, with the center of its field of view 45° above the Y-Z plane. The prism collects light from a 60° segment of the celestial sphere and refracts it to the prism hypotenuse. The light reflects from the hypotenuse, emerges from the output face of the prism, and impinges on the first element of the objective lens assembly.

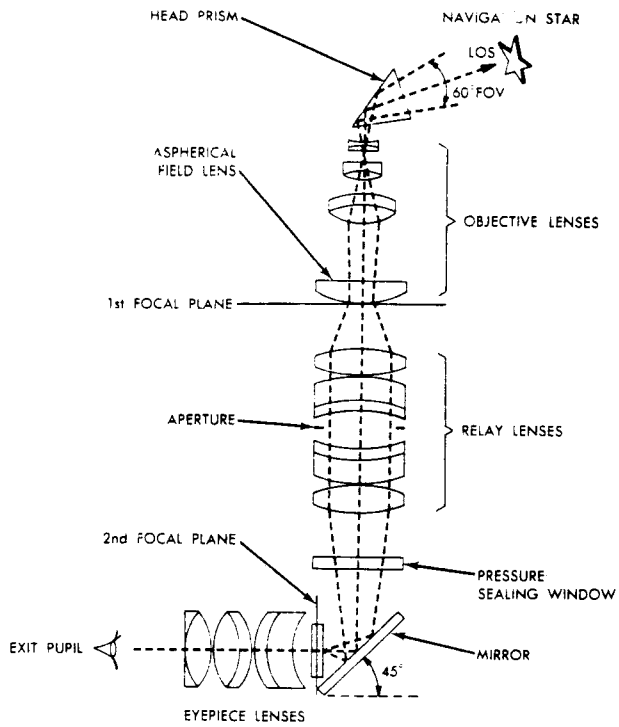

Figure 2.1-30. Alignment Optical Telescope - Optical Schematic

The eyepiece optics section is the assembly through which the astronaut views the images of the stars on the reticle. The eyepiece optics consists of a glass window, a mirror, the reticle, and the eyepiece lenses. The glass window is mounted between the relay lens assembly and the eyepiece optics provides a seal between the two assemblies. The mirror, mounted between the window and the eyepiece optics at an angle of 45°, reflects the image from the relay lenses into the eyepiece lenses. The reticle is at the second focal plane, coincident with the image and concentric with the AOT optical centerline. The reticle is positioned between two plano-plano glass disks. The reticle pattern is etched on one disk and covered by the other for protection. The disks are clamped together and mounted to a gear train, which drives the reticle counter.

The AOT reticle pattern consists of crosshairs and a pair of Archimedes spiral lines. The vertical crosshair, an orientation line designated the Y-line, is parallel to the LM X-axis when the reticle is at the 0° reference position. Actually, the vertical crosshair (upper quadrant) is a pair of radial lines that facilitate accurate superimposition of target stars between them. The horizontal crosshair, designated the X-line, is perpendicular to the orientation line. The pair of spiral lines are one-turn spirals, originating from the center of the reticle and terminating at the top of the vertical crosshair.

Ten miniature red lamps mounted around the reticle prevent false star indications caused by imperfections in the reticle and illuminate the reticle pattern. Stars will appear white, reticle imperfections, red. Heaters prevent fogging of the mirror due to moisture and low temperatures during the mission. The AOT mirror heaters receive operating power through the HEATERS: AOT circuit breaker (panel 11). This power is applied 30 minutes before initally using the AOT and is then left on for the remainder of the mission.

A reticle control enables manual rotation of the reticle for use in lunar surface alignments. A counter on the left side of the AOT, provides angular readout of the reticle rotation. The counter reads in degrees to within ±0.02° or ±72 seconds. The maximum reading is 359.98°, then the counter returns to 0°. Interpolation is possible to within ±0.01°.

A rotatable eyeguard is fastened to the end of the eyepiece section. The eyeguard is axially adjustable for head position. It is used when the astronaut taks sightings through the AOT with his faceplate open. This eyeguard is removed when the astronaut takes sightings with his faceplate closed; a fixed eyeguard, permanently cemented to the AOT, is used instead. The fixed eyeguard prevents marring of the faceplate when pressed against the eyepiece.

A high-density filter lens, supplied as auxiliary equipment, prevents damage to the astronaut's eyes due to accidental direct viewing of the sun or if the astronaut chooses to use the sun as a reference. The filter mounts on a threaded portion of the fixed eyeguard.

2.1.4.2.2 Computer Control and Reticle Dimmer Assembly.

The CCRD is mounted on the AOT guard. A thumbwheel on this control box enables the astronauts to adjust the brightness of the AOT reticle lamp when star-sighting. MARK X and MARK Y pushbuttons, also on this assembly, are used by the astronauts to send discrete signals to the LGC when star-sighting for an IMU in-flight alignment. The REJECT pushbutton is used if an invalid mark discrete has been sent to the LGC. The assembly routes heater power to the AOT and supplies reticle lamp power. The reticle-dimming circuit consists of a thumbwheel-controlled potentiometer (which protrudes from one side of the CCRD), two diodes, a control transistor, and a transformer.

2.1.4.2.3 Optical Subsection Operation.

The OSS is used for manual star sightings, which are necessary for accurate determination of the inertial orientation of the IMU stable member. These star sightings are required during certain periods while the LM is in flight. There are two methods for using the OSS.

In-Flight Sightings. (See figure 2.1-31.) For in-flight sightings, the AOT may be placed in any of the three usable detent positions. However, when the LM is attached to the CSM, only the F position is used. For in-flight operation, the CSS and the ISS are turned on, the AOT counter is zeroed, a detent position is selected, and the LM is maneuvered to obtain a selected star in the AOT field of view, near the center. The specific detent position code and selected star code are entered into the LGC via the DSKY. The LM is then maneuvered so that the star image crosses the reticle crosshairs. When the star image is coincident with the Y-line, the astronaut presses the MARK Y pushbutton; when it is coincident with the X-line, he presses the MARK X pushbutton. The astronaut may do this in either order and, if desired, he may erase the latest mark by pressing the REJECT pushbutton. When the MARK X or MARK Y pushbutton is pressed, a discrete is sent to the LGC. The LGC then records the time of mark and the IMU gimbal angles at the instant of the mark.

Crossing of a reticle crosshair line by the star image defines a plane containing the star. Crossing of the other reticle crosshair line defines another plane containing the same star. The intersection of these planes forms a line that defines the direction of the star. To define the inertial orientation of the stable member, sightings on at least two stars are required. Each star sighting requires the same procedure. Multiple reticle crossings and their corresponding marks can be made on either or both stars to improve the accuracy of the sightings. Upon completion of the second star sightings, the LGC calculates the orientation of the stable member with respect to a predefined reference coordinate system.

Lunar Surface Sightings. On the lunar surface, the LM cannot be maneuvered to obtain a star-image crossing on a reticle crosshair line. The star can be selected in any detent position (F, R, R_R, CL, L_R, or L) of the AOT. The astronaut, using the manual reticle control knob, adjusts the reticle to superimpose the target star between the two radial lines on the reticle. The angle (star shaft angle, A_S) displayed on the AOT counter is then inserted into the LGC by a DSKY entry. The astronaut next rotates the reticle until the same target star is superimposed between the two spiral lines on the reticle. This provides a second angular readout (reticle angle, A_R), which is inserted into the LGC by a DSKY entry. The AOT detent position and the star code numbers are also inserted into the LGC. The LGC can now calculate the angular displacement of the star from the center of the field of view by computing the difference between the two counter readings. Due to the characteristics of the reticle spiral, this angle (A_R - A_S) is proportional to the distance of the star from the center of the field of view. Using this angle and the proportionality equation, the LGC can calculate the trunnion angle (A_T). At least two star sightings are required for determination of the inertial orientation of the stable member.

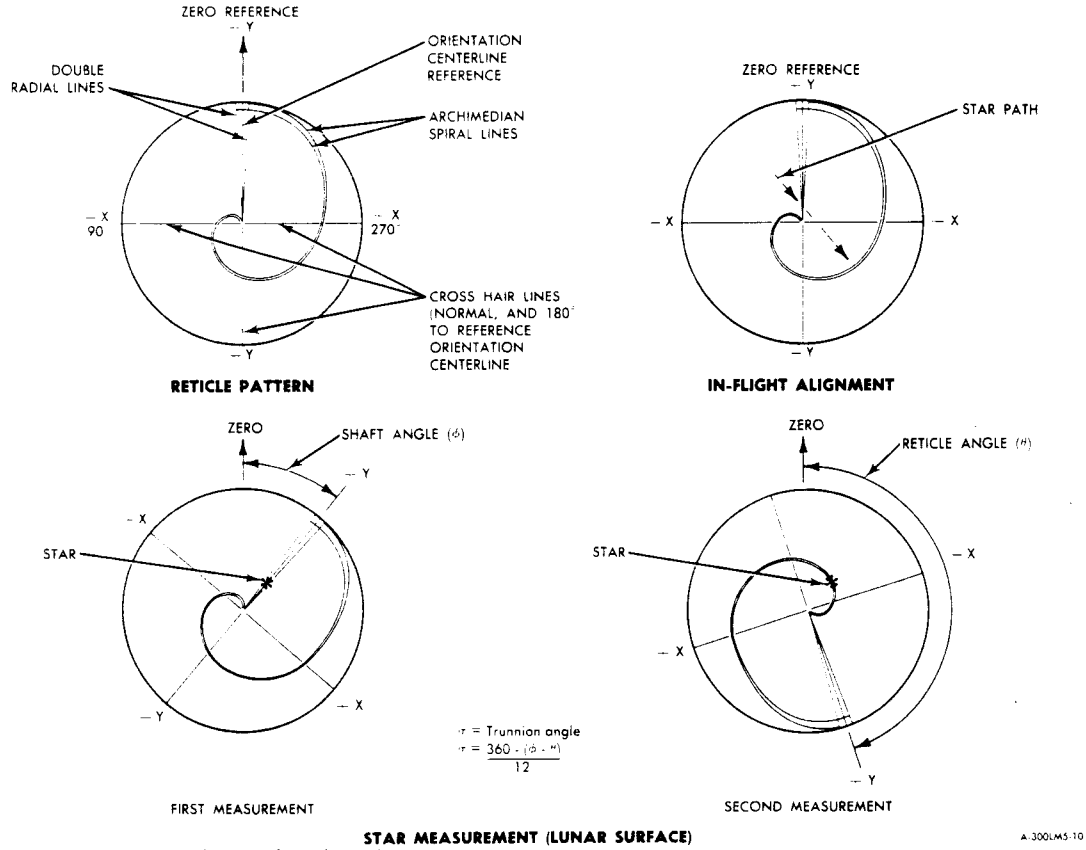

Figure 2.1-31. Alignment Optical Telescope - Reticle Pattern

2.1.4.3 Primary Guidance and Navigation Section - Computer Subsection.

The CSS is the control and processing center of the PGNS. It consists of the LGC and the DSKY. The CSS processes data and issues discrete outputs and control pulses to the PGNS, AGS, CES, and to other LM subsystems.

2.1.4.3.1 LM Guidance Computer. (See figure 2.1-32.)

The LGC contains a timer, sequence generator, central processor, priority control, an input-output section and a memory. The main functions of the LGC are implemented through execution of programs stored in memory. Programs are written in a machine language called basic instructions. A basic instruction can be an instruction word or a data word. All words for the LGC are 16 bits long.

In memory, data words contain a parity bit, 14 magnitude bits, and a sign bit. A binary 1 in the sign bit indicates a negative number; a binary 0, a positive number. Instruction words contain a 12-bit address code and a three-bit order code. Normally, the address code represents the location of a word in memory or the central processor. The order code defines the data flow within the LGC, and the address code selects the data that is to be used for computations. The order code represents an operation to be performed on the data whose location is represented by the address code. The order code of each instruction is entered into the sequence generator, which controls data flow and produces a different sequence of control pulses for each instruction. Each instruction is followed by another instruction. To specify the sequence in which consecutive instructions are to be executed, the instructions are normally stored in successive memory locations. The address of the instruction to be executed next is derived by adding the quantity one to the address of an instruction being executed. Execution of an instruction is complete when the order code of the next instruction is transferred to the sequence generator and the relevant address is in the central processor.

The central processor performs arithmetic operations and data manipulations on information accepted from memory, the input channels, and priority control. Arithmetic operations are performed using the binary 1's complement numbering system. The central processor performs all operations under the control of pulses generated by the sequence generator.

All words read out of memory are checked for the correct parity, and a bit is generated within the central processor for all words written into memory. The LGC uses odd parity; an odd number of binary 1's including the parity bit is associated with all the words stored in memory. The central processor also supplies data and control signals through the output channels and provides interface for the various subsystems.

The LGC operates in an environment in which many parameters and conditions change in a continuous manner. The LGC, however, operates in an incremental manner, operating only one parameter at a time. Therefore, for the LGC to process the parameters, the LGC hardware is time shared. The time sharing is accomplished by assigning priorities to the LGC processing functions. These priorities are used by the LGC so that it processes the highest priority processing function first. Time sharing is implemented by one of the following:

- Counter interrupt (a hardware function)
- Program interrupt (a hardware and program control program)
- Program-controlled processing (program control function).

Each of the foregoing has a relative priority with respect to each other; also within each there are a number of processing functions, each having a priority level relative to the other processing functions within the group. Most of the processing performed by the LGC is in the program controlled processing category. During this processing the LGC is controlled by the program stored in the LGC memory.

The counter interrupt processing has the highest priority functions. A counter interrupt input that requires processing causes the processing of either program-controlled function or interrupt to be suspended. After processing the counter interrupt, control is returned to the processing that was suspended. Program interrupts are the next highest priority type of processing. This type of processing causes suspension of any program controlled processing. A program interrupt cannot interrupt or suspend the processing of a counter interrupt or the processing of another program interrupt, but an inhibit, initiated through program action, can be set so that the program interrupt processing cannot interrupt the program-controlled processing. Program-controlled processing is the lowest priority type of processing. Any counter interrupt or program interrupt processing causes the program-controlled processing to be suspended. The LGC has 10 program interrupt conditions. These interrupts, in order of priority, are as follows:

- Time 6 interrupt (T6 RUPT)
- Time 5 interrupt (T5 RUPT)
- Time 3 interrupt (T3 RUPT)
- Time 4 interrupt (T4 RUPT)
- Key interrupt No. 1 (KYRPT 1)
- Key interrupt No. 2 (KYRPT 2) or Mark interrupt (MKRPT)
- Uplink interrupt (UPRUPT)
- Downlink interrupt (DNKRPT)
- Radar interrupt (RADRPT)
- Hand controller interrupt (HNDRPT).

Channel No. 4. This channel is the low-order scaler. The channel furnishes a 14-bit positive number whose least significant bit has as a weight of 1/3200 second. The maximum content of the register is 5.12 seconds.

Channel No. 5 and 6. These output channels have eight bit positions and are associated with the RCS thrusters. The channel outputs are used for LM translation and rotation. The thruster commands from the channels are fed to preamplifiers of the jet drivers in the CES. The driver amplifier outputs are fed to the RCS to provide required control. The alphanumeric designation in the "bit position" columns indicates which of the 16 thrusters is controlled by that bit. A logic 1 in any of the bit positions causes the appropriate thruster to be fired.

Channel No. 7. The channel is the fixed, external memory register. It is associated with selection of word locations in the fixed memory. The channel has three bit positions.

Channel No. 10. The information in this channel is routed to the DSKY, which illuminates the various electroluminescent displays associated with the DSKY.

Channel No. 11. All the information in this channel is routed to the DSKY condition indicators. If bit positions No. 1 through 7 contain a logic 1, the appropriate indicator goes on. Bit positions No. 13 and 14 contain the on-off commands for the ascent or descent engine (dependent on the setting of the ENG ARM switch).

Channel No. 12. This output channel contains the discrete commands that are used by the PGNS. Bit positions No. 13 and 14 contain the discretes issued to the radar section.

Channel No. 13. The first four bits of this channel are associated with the radars. The content of bit positions No. 1 through 3 defines which data are to be supplied by the radars to the LGC. (Refer to table 2.1-4.) Bit position No. 4 contains the radar data strobe. When a "1" has been entered into bit position No. 4 simultaneously with the necessary selection bits in bit positions No. 1 through 3, the LGC starts to transmit one of the six control signals. While the control signal is being transmitted, a sync pulse is also transmitted. When the radar receives the sync pulses, it sends data pulses to the LGC. Bit positions No. 12 through 14 are program interrupt priority control commands. Bit position No. 6 is not used.

Channel No. 14. Bit positions No. 6 through 15 are associated with the ISS. CDU drive signals (bit positions No. 11 through 15) are generated when the bit position contains a logic 1. More than one of these signals can be generated simultaneously. Bit positions No. 7 and 8 select a gyro to be torqued positively or negatively and then applies a 3,200-cps signal to the appropriate gyro. The appropriate signal is determined by the configuration of bits No. 7 through 9. If bit positions No. 6 and 10 are a logic 1, a 3,200-cps pulse train is routed to the gyro electronics specified by bit positions No. 7 through 9.

Channel No. 15. This input channel has five bit positions. Whenever a pushbutton on the DSKY is pressed, a five-bit code is entered into this channel.

Channel No. 16. This input channel has five bit positions. If a MARK pushbutton on the AOT is pressed, a logic 1 is entered into bit positions No. 3, 4, or 5. This initiates an interrupt routine within the LGC. Bits No. 6 and 7 receive discretes from the DES RATE switch (panel 5), commanding an increase or decrease in the rate of descent.

Channel No. 30. This input channel consists of 15 bit positions and uses inverted logic.

Bit position No. 1 informs the LGC that an abort, using the descent engine, has been commanded. This position is filled by either crewman pressing the ABORT pushbutton.

Bit position No. 2 informs the LGC that staging has occurred. This signal is generated in the Explosive Devices Subsystem.

Bit position No. 3 informs the LGC that the crew has armed the ascent or descent engine by setting the ENG ARM switch to the appropriate position.

G

nel Assignments

	9	10	11	12	13	14	15	Channel
								1 2 3 4
								5
								6
								7
	Relay bit 9	Relay bit 10	Relay bit 11	Relay address 1	Relay address 2	Relay address 3	Relay address 4	10
t	Test connect outbit	Caution reset			Engine-on command	Engine-off command		11
	+ Pitch trim	- Pitch trim	+ Roll trim	- Roll trim	LR position command	RR auto track or enable	ISS turn-on complete	12
r	RHC read	Test alarms	Enable standby	Reset trap	Reset trap	Reset trap	Enable T6 interrupt	13
	Gyro minus	Gyro activity	Shaft angle CDU drive	Trunnion angle CDU drive	θZ^{CDU}_{drive}	θY^{CDU}_{drive}	θX^{CDU}_{drive}	14
								15
								16
	IMU operate	G&N control of S&C	IMU cage	IMU CDU failure	IMU failure	ISS turn-on request	Temperature in limits	30
ion	+Y-translation	-Y-translation	+Z-translation	-Z-translation	Attitude hold	Automatic stabilization	ACA out of detent	31
d	Gimbal off	Apparent gimbal fail						32
	LR range low scale	Block uplink	Uplink too fast	Downlink too fast	PIPA failed.	LGC	Oscillator alarm	33
								34
								35

Table 2.1-3. LGC Input-Output Channel Assignments

	Bit Positions							
	2	3	4	5	6	7	8	9
U	RCS A4D on	RCS A3U on	RCS B3D on	RCS B2U on	RCS A2D on	RCS A1U on	RCS B1D on	
A	RCS B4F on	RCS A1F on	RCS A2A on	RCS B2L on	RCS A3R on	RCS A4R on	RCS B1L on	
				FE 5	FE 6	FE 7		
it 1	Relay bit 2	VEL caution lamp	Relay bit 4	ALT caution lamp	Relay bit 6	Relay bit 7	Relay bit 8	Relay bit 9
ning anel 1)	CMPTR ACTY lamp	UPLINK ACTY status lamp	TEMP caution lamp	KEY REL status lamp	VERB/NOUN flash	OPR ERR status lamp	Test connect outbit	Test connect outbit
R	RR error-counter enable	Horizontal vel low scale	Coarse-align enable	Zero IMU CDU	IMU error-counter enable		DID enable	+ Pitch trim
	Radar b (Refer to table 2.1-4.)	Radar a	Radar activity	Inhibit uplink	Block inlink	Downlink word order	Enable RHC counter	RHC read
	Altitude rate	Altitude indicator	Thrust indicator drive		Gyro enable	Gyro b	Gyro a	Gyro minus
	Key 2	Key 3	Key 4	Key 5				
		Mark X	Mark Y	Mark REJECT	Positive rate of descent	Negative rate of descent		
	Stage verify	Engine armed	Abort Stage	Automatic throttle	DID	RR CDU failure		IMU operate
ation	- Elevation (LPD)	+ Yaw	- Yaw	+ Azimuth (LPD)	- Azimuth (LPD)	+X-translation	-X-translation	+Y-translatio
D and iled.	RCS A3U and A3R failed.	RCS B4U and B4F failed.	RCS B3D and B3A failed.	RCS B1D and B1L failed.	RCS A1U and A1F failed.	RCS B2U and B2L failed.	RCS A2D and A2A failed.	Gimbal off
	RR power on automatic	RR range low scale	RR data good	LR data good	LR position No. 1	LR position No. 2	LR velocity data good	LR range low scale
rst of two words								
cond of two words								

Channel	Name	1	2
1 2 3 4	L-register Q-register Scaler 2 Scaler 1		
5	Pitch Yaw	RCS B4U on	RCS A4D on
6	Roll	RCS B3A on	RCS B4F on
7	F EXT register		
10	DSKY	Relay bit 1	Relay bit 2
11	DSKY	ISS warning light (panel 1)	CMPTR ACTY lamp
12	GN&CS discretes	Zero RR CDU	RR error- counter enable
13	LGC discretes	Radar c	Radar b (Refer to table 2.1-4.
14	IMU discretes	Outlink activity	Altitude rate
15	Main DSKY	Key 1	Key 2
16	Navigation		
30	GN&CS discretes	Abort	Stage verify
31	Translation and rotation	+ Elevation (LPD)	- Elevation (LPD)
32	Impulse	RCS A4D and A4R failed.	RCS A3U and A3R failed.
33	Optics (LGC)		RR power on automatic
34	Downlink 1	First of two words	
35	Downlink 2	Second of two words	

Bit position No. 4 informs the LGC that an abort, using the ascent engine, has been commanded.

Bit position No. 5 informs the LGC that it is in control of descent engine throttle.

Bit position No. 6 requests the LGC to supply forward and lateral velocity signals to the X-pointer indicators.

Bit position No. 7 contains a logic 1 when a failure has occurred in a radar CDU channel.

Bit position No. 9 contains a logic 1 when the IMU is in the operate mode.

Bit position No. 10 informs the LGC that PGNS is in control of the LM.

Bit position No. 11 indicates that the IMU cage condition exists in the ISS.

Bit position No. 12 indicates that a failure has occurred in an inertial CDU channel.

Bit position No. 13 indicates that a malfunction has occurred in the IMU stabilization loop.

Bit position No. 14 indicates that the ISS has been turned on or commanded to be turned on.

Bit position No. 15 indicates that the stable member temperature has not exceeded its design limits.

Table 2.1-4. Channel 7 Radar Fixed Extension Bits

Function	Bit 1 a	Bit 2 b	Bit 3 c
RR range rate	0	0	0
RR range	0	0	1
LR V_x	1	0	0
LR V_y	1	0	1
LR V_z	1	1	0
LR range	1	1	1

Channel No. 31. This input channel has 15 bit positions and uses inverted logic.

Bit positions No. 1 and 2 indicate positive and negative pitch manual input commands, respectively, from the ACA. These bits are used for elevation changes when the landing point designator (LPD) is used.

Bit positions No. 3 and 4 indicate positive and negative yaw manual input commands, respectively, from the ACA.

Bit positions No. 5 and 6 indicate positive and negative roll manual input commands, respectively, from the ACA. These bits are used for azimuth changes when the LPD is used.

Bit positions No. 7 through 12 indicate positive and negative X-, Y-, and Z-translation commands from the TTCA. These signals command LM translation by on-and-off firing of the thrusters, under LGC control.

Bit position No. 13 indicates that the CES is operating in the attitude hold mode.

Bit position No. 14 indicates that the CES is operating in the automatic mode.

Bit position No. 15 informs that LGC that the ACA is out of detent.

Channel No. 32. This input channel has 15 bit positions and uses inverted logic.

Bit positions No. 1 through 8 inform the LGC of a thruster pair shutoff, so that the LGC immediately ceases to command the thruster pair on and compensates for its loss.

Bit position No. 9 informs the LGC that the descent engine pitch and roll gimbal drive actuators have been shut off by the astronaut.

Bit position No. 10 informs the LGC that the DECA has detected an apparent failure of the pitch or roll trim loop.

Channel No. 33. This input channel has 15 bit positions and uses inverted logic.

Bit position No. 2 indicates that RR power is on and the RR mode selector switch (panel 3) is set to LGC.

Bit position No. 3 indicates that the RR scale factor is on low scale. This signal is implemented automatically by the RR at a range of less than 50 nautical miles.

Bit positions No. 4 and 5 indicate that the RR and LR range trackers have locked on.

Bit positions No. 6 and 7 indicate the position of the LR antenna.

Bit position No. 8 indicates that the LR velocity trackers have locked on.

Bit position No. 9 indicates that the LR scale factor is on low scal This signal is implemented by the LR at approximately 2,500 feet.

Bit position No. 10 is used to inhibit reception of data via uplink. This signal is always in the logic 0 state.

Bit positions No. 11 and 12 indicate that PGNS telemetry rate is too high.

Bit position No. 13 indicates failure in an accelerometer loop.

Bit position No. 14 indicates an LGC internal malfunction.

Bit position No. 15 indicates that the LGC oscillator stopped.

Channels 34 and 35. These outputs channels provide 16-bit words, including a parity bit, for downlink telemetry transmission.

Memory. Memory provides the storage capability for the LGC; it is divided into two sections: erasable memory and fixed memory. The erasable memory has a storage capacity of 2,048 words; the fixed memory, 36,864 words. The erasable memory is a random-access, destructive-readout storage device. Data stored in the erasable memory can be altered or updated. The fixed memory is a nondestructive storage device. Data stored in the fixed memory are unalterable, because the data are hardwired and readout is nondestructive.

Both memories contain magnetic-core storage elements. In the erasable memory, the storage elements form a core array; in the fixed memory, the storage elements form three core ropes. The erasable memory has a density of one word per 16 cores; the fixed memory, eight words per core. Each word is located by an address.

In the fixed memory, addresses are assigned to instruction words to specify the sequence in which they are to be executed; blocks of addresses are reserved for data, such as constants and tables. Information is placed into the fixed memory permanently by weaving patterns through the magnetic cores. Information is written into assigned locations in the erasable memory with the DSKY, uplink, or program operation.

Both memories use a common address register (S-register) and an address decoder in the central processor. When the S-register contains an address pertaining to the erasable memory, the erasable memory cycle timing is energized. Pulses sent to the erasable memory cycle timing then produce strobe signals for the read, write, and sense functions. The erasable memory selection logic receives an address and a decoded address from the central processor and produces selection signals, which permit data to be written into, or read out from, a selected storage location. When a word is read out from a storage location in the erasable memory, the location is cleared. A word written into the erasable memory, through the memory buffer register in the central processor, by a write strobe operation. A word read from a storage location is applied to the amplifiers. The amplifiers are strobed and the information is entered into a buffer register of the central processor. The memory buffer register receives information from both memories.

The address in the S-register energizes the fixed memory cycle timing when a location in the fixed memory is addressed. Pulses sent to the fixed memory cycle timing produce the strobe signals for the read and sense functions. The selection logic receives an address from the write lines and a decoded address from the S-register, and produces selection signals for the core rope. The content of a storage location in the fixed memory is strobed from the fixed memory sense amplifiers to the erasable memory sense amplifiers and then entered into the memory buffer register of the central processor.

Alarm-Detection Network. The alarm-detection network consists of temperature, voltage, scaler, double frequency scaler oscillator, memory clamping, and the warning filter and integrator circuits. The alarm-detection network monitors LGC operation. If an LGC failure is detected, a failure signal is routed to the DSKY for display. An LGC power failure is also displayed by the LGC warning light (panel 1).

2.1.4.3.2 Display and Keyboard Assembly. (See figure 2.1-33.)

The DSKY consists of a keyboard, display panel, condition indicators, and a relay package. The keyboard enables the astronauts to insert data into the LGC and to initiate LGC operations. Through the keyboard, the astronauts can also control ISS moding. The DSKY display panel provides visual indications of data being loaded into the LGC, LGC condition, and LGC program. The display panel also provides the LGC with a means of displaying or requesting data. The condition indicators display PGNS status and malfunctions. The controls and displays associated with the DSKY are discussed in section 3.

Keyboard. The DSKY keyboard is used to insert or read out LGC data. The keyboard consists of 10 numerical pushbuttons (0 to 9), two sign pushbuttons (+ and -), and seven instruction pushbuttons (ENTR, CLR, VERB, NOUN, RSET, PRO, and KEY REL). All the pushbuttons, except the PRO pushbutton, have five-bit codes associated with them; they convey information to the LGC. The PRO pushbutton is hardwired into the LGC power supplies.

Displays and Indicators. There are two types of displays on the DSKY: control displays and data displays. Each display can display any decimal character or remain blank. The indicators on the DSKY are referred to as condition lights; they represent various PGNS operating conditions. Each control display (VERB, NOUN, and PROG) can display two decimal characters or remain blank. The VERB and NOUN displays can also flash. The data displays are three separate registers, referred to as R1, R2, and R3. Each register can display as many as five decimal characters, with or without a plus or minus sign, or remain blank. Each of the 11 condition lights on the DSKY is labeled with the PGNS condition it represents; it goes on if that condition occurs. The condition lights and the conditions they represent are described in section 3.

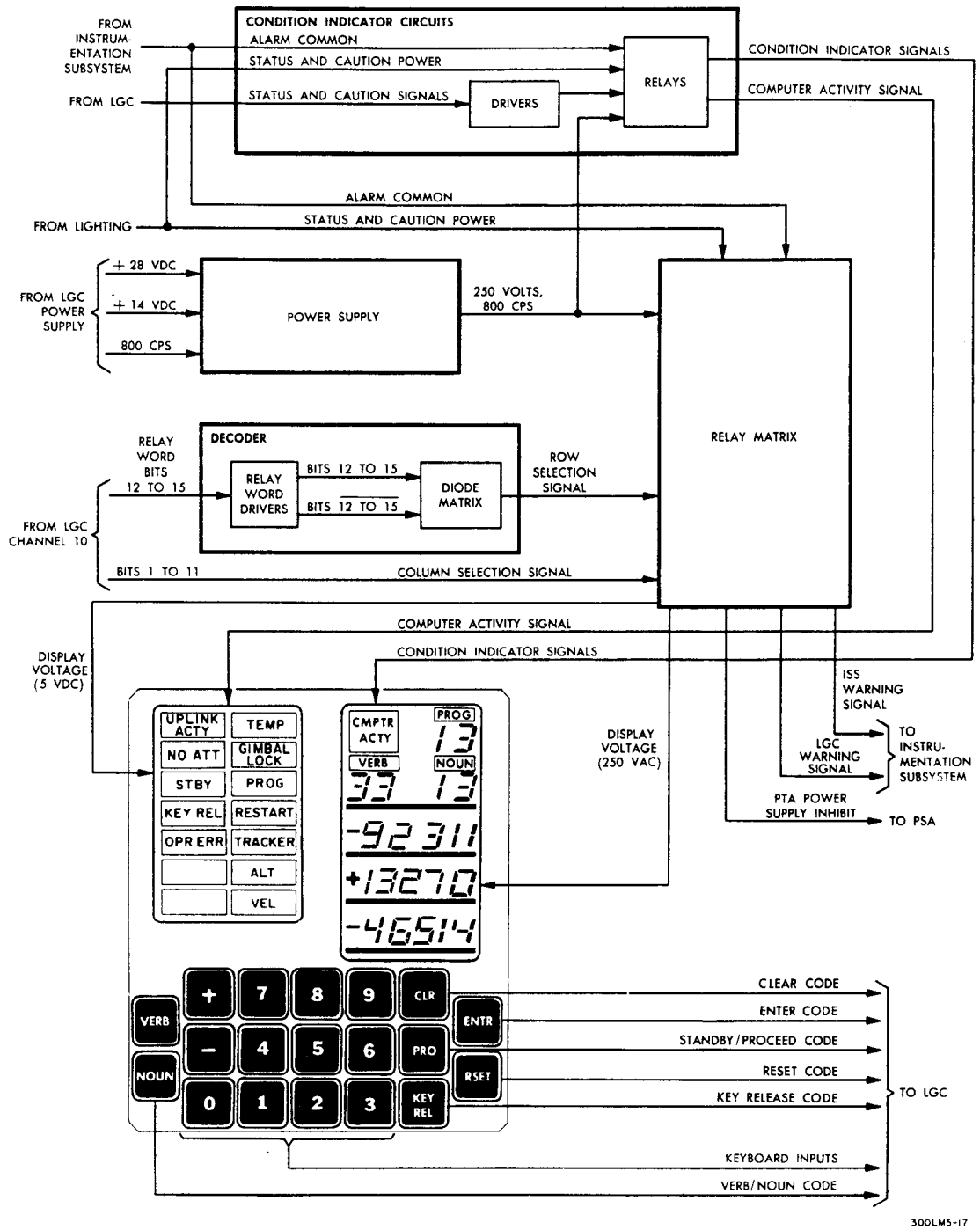

Figure 2.1-33. Display and Keyboard Assembly - Block Diagram

Relay Package. The relay package consists of a relay matrix and decoding circuits.

The inputs entered from the keyboard, as well as other information, appear on the displays after processing by a program. Display of information is accomplished through the relay matrix. A unique code for the characters to be displayed is formed by 15 bits from output channel No. 10 in the LGC. Bits No. 12 through 15 are decoded by the decoding circuits and, along with bits No. 1 through 11, energize specific relays in the matrix, causing appropriate characters to be illuminated. The information displayed is the result of a key code punched in by the astronaut, or is LGC-controlled information. The display characters are formed by electroluminescent segments, which are energized by a voltage from the power supply, routed through relay contacts. Specific inputs from the PGNS are also applied, through the LGC, to certain relays in the matrix through output channel No. 10 of the LGC. The resulting relay-controlled outputs are caution signals to the PGNS.

2.1.4.3.3 Manual Operation of DSKY.

The operator of the DSKY can communicate with the LGC by pressing a sequence of pushbuttons on the DSKY keyboard. Except for the PRO pushbutton, each pushbutton pressed inserts a five-bit code into the LGC. The LGC responds by returning a code, which controls a display on the display panel, to the DSKY or by initiating an operation by the central processor. The LGC can also initiate a display of information or request the operator for some action, through the processing of its program,

The basic language of communication between the operator and the DSKY consists of verb and noun codes. (Refer to Apollo Operations Handbook, Volume II, paragraph 4.4 for DSKY verb and noun codes.) The verb code indicates what action is to be taken (operation). The noun code indicates to what this action is applied (operand). Verb and noun codes may be originated manually or by internal LGC sequence. Each verb or noun code contains two numerals. The standard procedure for manual operation involves pressing a sequence of seven pushbuttons:

VERB V_1 V_2 NOUN N_1 N_2 ENTR

Pressing the VERB pushbutton blanks the VERB code display on the display panel and clears the verb code register within the LGC. The next two pushbuttons (0 to 9) pressed provide the verb code (V_1 and V_2). Each numeral of the code is displayed by the VERB display as the pushbutton is pressed. The NOUN pushbutton operates the same as the VERB pushbutton, for the NOUN display and noun code register. Pressing the ENTR pushbutton starts the operation called for by the displayed verb-noun combination. It is not necessary to follow any order in punching in the verb or noun code. It can be done in reverse order, and a previously entered verb or noun may be used without repunching it.

If an error in the verb code or the noun code is noticed before the ENTR pushbutton is pressed, correction is made by pressing the VERB or NOUN pushbutton and repunching the erroneous code, without changing the other one. Only when the operator has verified that the desired verb and noun codes are displayed should he press the ENTR pushbutton. An example of the sequence in which the pushbuttons are pressed is as follows: VERB, 1, 6, NOUN, 2, 1, ENTR. Pressing the ENTR pushbutton advises the LGC that it should perform the operation called for by the verb and noun codes. An alternative sequence would be: NOUN, 2, 1, VERB, 1, 6, ENTR. When the VERB pushbutton is pressed, the two VERB displays are blanked. As the digits of the VERB code are punched in, they are displayed in the VERB displays. The NOUN display operates in the same manner.

A noun code can refer to a group of LGC erasable registers, a group of counter registers, or it may serve merely as a label. A label noun does not refer to a particular LGC register; it conveys information by its noun code number only. The group of registers to which a noun code refers may be a group of one, two, or three members. These members are generally referred to as 1-, 2-, or 3-component nouns. The component is understood to be a component member of the register group to which the noun refers. The machine addresses for the registers to which a noun refers are stored in the LGC in noun tables.

A single noun code refers to a group of 1-, 2-, or 3-component members. The verb code determines which component member of the noun group is processed. For instance, there are five different load verbs. Verb 21 is required for loading the first component of whatever noun is used therewith; verb 22 loads the second component of the noun; verb 23, the third component; verb 24, the first and second component; and verb 25, all three components. A similar component format is used for the display and monitor verbs.

When the decimal display verb is used, all the component members of the noun being used are scaled as appropriate, converted to decimal, and displayed in the data display registers. Decimal data are identified by a plus or minus sign preceding the five digits. If a decimal format is used for loading data of any component members of a multicomponent load verb, it must be used for all components of the verb. Mixing of decimal and octal data for different components of the same load verb is not permissible. If data are mixed, the OPR ERR condition light goes on.

Monitor verbs update displayed data once a second. Once a monitor verb is executed, the data on the display panel continues to be updated until the monitor is turned off by V33E (proceed/proceed without data), V34E (terminate), and internal program initiation of the program, or by a fresh start of the LGC. V33E is the abbreviation for the sequence of depressions (VERB, 3, 3, ENTR) that instructs the LGC to stop updating the monitor (display registers).

After any use of the DSKY, the numerals (verb, noun, and data words) remain visible until the next use of the DSKY. If a particular use of the DSKY involves fewer than three data words, the data display registers (R1, R2, R3) not used remain unchanged unless blanked by deliberate program action.

"Machine address to be specified" nouns allow any machine address to be used. When the ENTR pushbutton is pressed the verb-noun combination senses a noun of this type, and the flash is immediately turned on. The verb code is left unchanged. The operator loads the desired five-octal-character complete machine address. It is displayed in R3 as it is punched in. If an error is made in loading the address, the clear (CLR) pushbutton may be used to remove it.

Data Loading. Some verb-noun codes require additional data to be loaded. If additional data are required after the ENTR pushbutton is pressed, following the keying of the verb-noun codes, the VERB and NOUN displays flash on and off at a 1.5-cps rate. These displays continue to flash until all information associated with the verb-noun code is loaded.

Numerical data are considered decimal if the five-numeral data word is preceded by a plus sign or a minus sign: if no sign is supplied, it is considered octal. The + and - pushbuttons are accepted by the LGC only when they precede the first numeral of the data word; they are ignored at any other time. Decimal data must be loaded in full five-numeral words (no zeros may be suppressed): octal data may be loaded with high-order zeros suppressed. If decimal format is used for any component of a multicomponent load verb, it must be used for all components of that verb. Mixing of octal and decimal data for different components of the same load verb is not permissible. (If such data are mixed, the operator error alarm is initiated.) The ENTR pushbutton must be pressed after each data word. This tells the program in progress that the numerical word entered is complete.

After the ENTR pushbutton is pressed, the VERB and NOUN displays stop flashing and remain on, displaying the entered verb-noun combination. As the various pushbuttons are pressed (while entering the data), the digits are displayed in positions of one of the display registers corresponding to the order in which they were entered. As the data is entered, it is temporarily stored in intermediate buffers. It is not placed into its final destination as a specified address noun code until the final ENTR pushbutton is pressed.

If an attempt is made to enter more than five numerals in sequence, the sixth and subsequent numerals are rejected. If the 8 or 9 pushbutton is pressed during octal load (as identified by lack of a sign entry), it is rejected and the operator error (OPR ERR) condition light goes on.

In multicomponent load situations, the appropriate single component load verbs are flashed one at a time. The LGC always instructs the operator through a loading sequence. The operator (or the internal program) initiates the sequence by selecting VERB, 25 (load 3 components of), (any noun will do), ENTR. The verb code is changed to 21 (load first component of) and the flash is turned on. Verb 21 continues to be flashed as the first data word is being loaded. When the ENTR pushbutton is pressed, the verb code is changed to 22 (load second component). Flashing continues while the second data word is loaded. When the ENTR pushbutton is pressed, the verb code is changed to 23 (load third component); the flash continues while the third data word is loaded. When the ENTR pushbutton is pressed, the flash is turned off and all three data words are placed in the locations specified by the noun.

Correcting Erroneous Data. The CLR pushbutton is used to remove errors in R1, R2, or R3 during data loading. This allows the astronaut to begin loading again. Use of the CLR pushbutton does not affect the PROG, NOUN, or VERB displays.

To correct errors for single-component load verbs, the CLR pushbutton clears the register being loaded, provided that the CLR pushbutton is pressed before the ENTR pushbutton. Once the ENTR pushbutton is pressed, the CLR pushbutton has no effect. After the ENTR pushbutton has been pressed, the only way to correct an error for a single component is to begin to load again.

To correct errors for second and third component load verbs, the CLR pushbutton is used. The first pressing of the CLR pushbutton clears the register being loaded. Consecutive pressing clears the registers above the register being loaded, until R1 is cleared.

Program Selection. Verb 37 is used to change the program. Keying VERB, 37, and ENTR blanks the NOUN display; the verb code flashes. The two-digit program code is then loaded. For verification purposes, the program code is displayed, as it is loaded, in the NOUN display register. When the ENTR pushbutton is pressed, the flashing stops, the new program to be entered is requested, and a new program code is displayed in the PROG display.

Release of Display and Keyboard System. The display and keyboard system program can be used by internal LGC programs. However, any operator keyboard action (except reset) makes the system program unavailable (busy) to internal routines. The operator has control of the system until he wishes to release it. Thus, he is assured that data he wishes to observe will not be replaced by internally initiated data displays. In general, it is recommended that the operator release the system for internal use when he has temporarily finished with it. This is done by pressing the KEY REL pushbutton.

If an internal program attempts to use the system, but finds that the operator has used it and not yet released it, the KEY REL light goes on. When the operator finds it convenient, he should press the KEY REL pushbutton to allow the internal program to use the display and keyboard panel.

Operator Error. The OPR ERR condition light goes on when the operator presses pushbuttons improperly. The light goes on when an undefined verb or noun is entered or when a verb that is defined and a noun that is defined are entered, but the combination of verb and noun is illegal. Both of these errors do not require any further operator action. The following operator errors also do not require further action:

- The component number of the verb exceeds the number of the components in the noun.
- The octal display and monitor verbs are used with a "decimal only" noun.
- The decimal display and monitor verbs are used with mixed nouns.
- The decimal display and monitor verbs are used with an "octal only" noun.
- A no-load verb is used with a noun that is not a no-load noun. (Nouns that have a split minute/second scale for any component are no-load nouns.)
- An input code other than those that are defined is received from the keyboard.
- The contents of the register exceed its limit.

When improper data are entered for a defined verb-noun combination that requires loading of additional data, the OPR ERR condition light goes on. The error is detected when the final entry of the loading sequence is made. When the light goes on, recycling to the beginning of the loading sequence is required. Only the data must be entered again, not the verb-noun combination. Other errors that cause the OPR ERR condition light to go on, and require recycling, are as follows:

- The address entered for a "machine address to be specified" noun is not octal.

- Octal and decimal data are mixed in multicomponent load verbs. (All data words loaded for a given noun must be all octal or all decimal.)
- Octal data are loaded a "decimal only" noun.
- Decimal data are loaded an "octal only" noun.
- Loaded decimal data numerically exceed the maximum permitted by the scale factor associated with the appropriate component of the noun.
- Negative decimal data are loaded, using the Y-optics scale.
- For displays of time, the three data words are not loaded for the hours, minutes, and seconds scale.
- When loading with the hours, minutes, and seconds scale, the minutes exceed 59, the seconds exceed 59.99, and the total exceeds 745 hours 39 minutes 14.55 seconds.
- Two numerals are not supplied for the program code under verb 37.

2.1.4.3.4 DSKY Operation Under LGC Control.

The principles of DSKY operation by the internal LGC sequences are the same as those described for manual operation of the DSKY. DSKY operation by the internal LGC sequences encompasses the following categories: display, loading, please perform, and please mark.

The display operation is used to display data to the operator. Data computed by the mission program can be displayed by using various display verbs. The loading operation requests that the operator load data. The please-perform operation requests an action by the operator, who then notifies the LGC that he has complied. The please-mark operation requests that the operator press MARK pushbutton on the AOT for an optics sighting.

LGC-initiated verb-noun combinations are displayed as static or flashing displays. A static display identifies data displayed only for operator information; no operator response is required. If the displayed verb-noun combination flashes, appropriate operator response is required, as dictated by the verb-noun combination. In this case, the internal sequence is interrupted until the operator responds appropriately, then the flashing stops and the internal sequence resumes. A flashing verb-noun display must receive only one of the proper responses; otherwise, the internal sequence that instructed the display may not resume.

Display. The appropriate operator response to a flashing display (verb-noun combination) is as follows:

- Correct the data and perform the appropriate load-verb sequence. Upon pressing the ENTR pushbutton, the internal sequence proceeds normally.
- Recycle by keying VERB, 32, ENTR. This returns the program to a previous location.
- Proceed, or proceed without data, by pressing the PRO pushbutton. This indicates acceptance of the displayed data and a desire for the internal sequence to continue normally.
- Terminate by keying VERB, 34, ENTR.

Data Loading. When data are to be loaded, the VERB and NOUN displays flash. The flashing occurs whether data loading is initiated by LGC or by the operator. The appropriate register (R1, R2, or R3) is blanked in anticipation of data loading. Data are loaded as five-numeral words; they are displayed numeral-by-numeral in one of the registers as loaded.

The appropriate response to an internally initiated verb-noun combination for loading is as follows:

- Load the desired data. After the final entry, the internal sequence proceeds normally.
- Proceed, or proceed without data, by pressing the PRO pushbutton.
- Terminate by keying VERB, 34, ENTR.

Please Perform. The operator must respond to a "please perform" request. With this request, the verb-noun combination flashes and the internal sequence is interrupted. The "please perform" verb (50) is usually used with the "checklist" noun (25) and an appropriate checklist code number in R1. (Refer to Apollo Operations Handbook, Volume II, paragraph 4.4 for checklist codes.) The appropriate response is as follows:

- Press the ENTR pushbutton to indicate that the requested action has been performed. (The internal sequence continues normally.) Proceed without data by pressing the PRO pushbutton. The operator chooses not to perform the requested action, but desires the internal sequence to continue with the previous data.
- Terminate by keying VERB, 34, ENTR.

The "please perform" verb is also used with the "change of program" noun and "engine-on enable" noun. Its use in these cases is subject to the LGC program in process.

Please Mark. The "please mark" verbs are flashed when the LGC is prepared to accept optical-sighting data from the AOT.

2.1.4.3.5 Primary Guidance and Navigation Section - Modes of Operation.

The PGNS is considered to be in an operational mode upon initiation of a program by the astronauts or MSFN. When operating under one of the various programs, the LGC automatically computes required mission parameters, commands the PGNS and the other sections and subsystems, and displays pertinent data to the astronaut and MSFN (via downlink). (Refer to Apollo Operations Handbook, Volume II, paragraph 4.4 for PGNS programs.) For operational compatibility, the astronauts and/or MSFN can initiate, modify, or interrupt the automatic program sequences. In certain cases, the programs are initiated by a previous program.

The LGC is preprogrammed to display a mode number or program number on the DSKY in response to initiation of a program. This display remains on until the sequence of events for the specific mission phase, as dictated by the program, is completed.

The astronaut may also be required, or may wish, to perform specific submodes (routines) during a program. The PGNS routines are used by most LGC programs, to perform the required input and output functions. (Refer to Apollo Operations Handbook, Volume II, paragraph 4.4 for PGNS routines.) Through these routines, the LGC can command various guidance modes, display and accept information from the DSKY and radar, provide for telemetry inputs and outputs, control positioning of the RR antenna and the IMU stable member, and remain cognizant of the PGNS and LM subsystem operations. Only the ISS of the PGNS operates under specific modes when the PGNS is used. These modes of ISS operation are listed and defined in paragraph 2.1.4.1.8.

2.1.4.4 Abort Guidance Section.

2.1.4.4.1 Abort Sensor Assembly. (See figure 2.1-34.)

The ASA contains three floated, pulse-rebalanced, single-degree-of-freedom, rate-integrating gyroscopes and three pendulous reference accelerometers in a strapped-down configuration. These six sensors are housed in a beryllium block, which is mounted on the navigation base. The sensors are aligned with the three LM reference axes. The assembly also includes pulse torque servo-amplifiers (one associated with each sensor), a frequency divider, temperature control amplifiers, and a power supply.

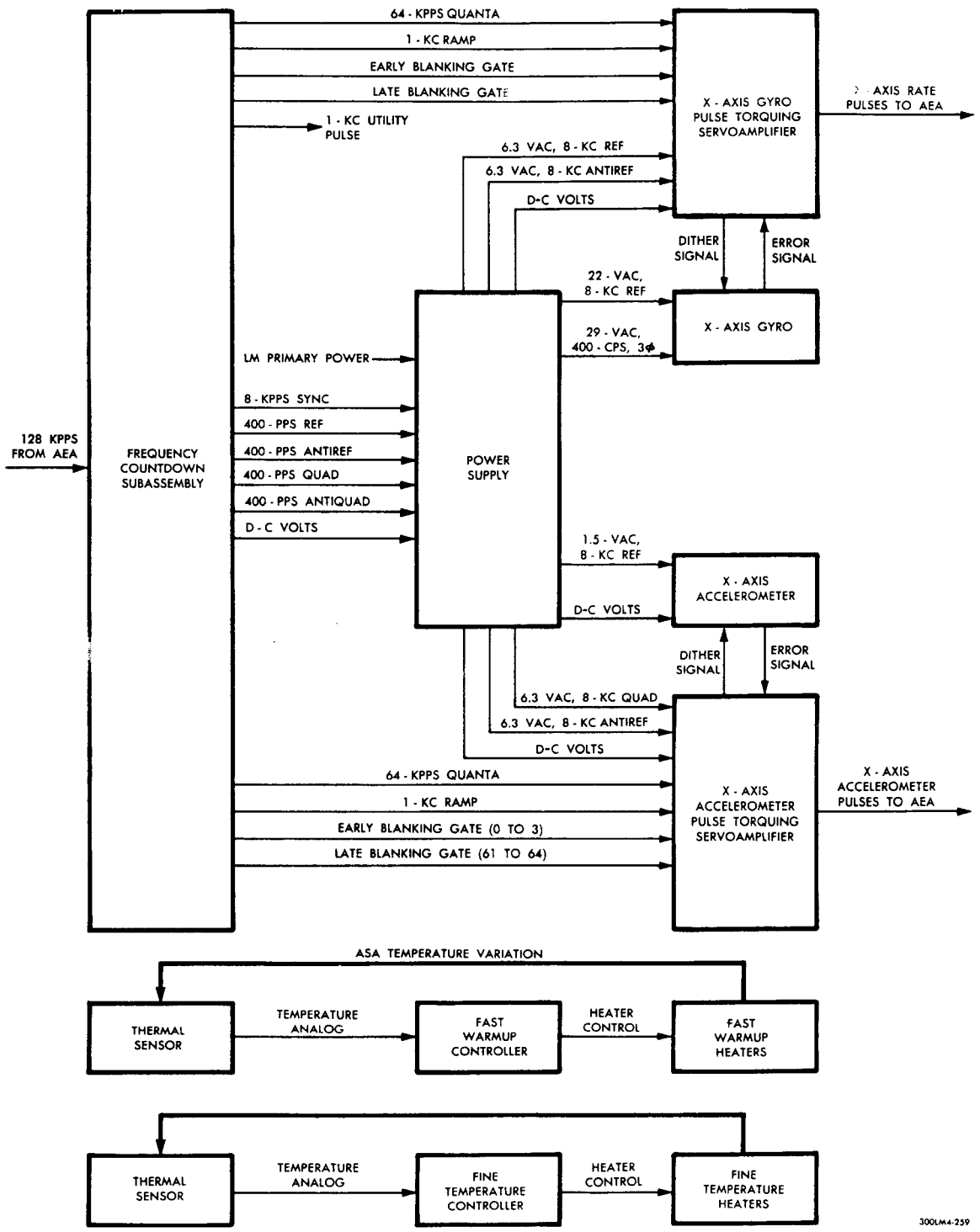

Figure 2.1-34. Abort Sensor Assembly - Block Diagram

GN

The ASA operates on a current pulse torquing principle to rebalance the output from its sensors. The three gyros sense angular rates about the LM orthogonal axes and the three accelerometers sense accelerations along the same axes. These motions are converted to pulses proportional to the sensed motion. These pulses are routed to the AEA for further processing. Current generated in the accelerometer produces torque that opposes the torque caused by the force of acceleration on a pendulous mass. The average current is proportional to the acceleration. Pulses generated in the accelerometers are used by the AEA in measuring velocity increments. The output of each gyro and accelerometer is applied to a pulse torque servoamplifier. The pulse torque servoamplifiers used quantized time-modulated feedback to torque-balance their associated gyro or accelerometer. The servoamplifiers consists of an amplifier, a quantizer bridge and driver, and a current regulator.

The strapped-down inertial guidance system has the advantage of substantial size and weight reduction over the more conventional gimbaled inertial guidance system, but has the disadvantage of error buildup over sustained periods of operation. The calibration method uses the PGNS as a reference to determine the drift-compensation parameters for the ASA gyros. Calibration parameters are stored in the AEA and used to correct calculations based on the gyro inputs.

The accuracy of the ASA inertial data outputs is temperature-dependent. The ASA temperature control subassembly maintains the internal ASA temperature at +120° F, with external temperatures between +30° and +130° F. Two temperature control circuits are used, one each for fast warmup and fine temperature control. During fast warmup, ASA temperature can be raised from +30° F to approximately +116° F in 40 minutes. The ASA must warm up for at least 25 minutes (warmup mode - AGS STATUS switch on panel 6 set to STANDBY) before operation. The fast warmup circuitry consists of a thermal sensor, which detects the internal ASA temperature and provides a proportional d-c analog to heater driver electronics that maintain the required heater power constant. The constant heater power permits a uniform temperature rise within the ASA. The fine temperature control circuit controls the temperature after ASA temperature reaches +116° F. The fine temperature control circuit can raise the temperature 4° F and maintain this operating temperature within 0.2° F.

Accelerometers. Each accelerometer is used in a closed servo loop in which the sensing mass (pendulum) is displaced by acceleration along the input axes. Fluid between the pendulum and housing provides damping for the servo loop.

An inductive pickoff device of the accelerometer detects pendulum displacement. This displacement produces an a-c error signal, which is fed to a pulse torquing servoamplifier, where it is demodulated and changed to a d-c voltage. The d-c voltage is fed to a pendulum torquer, which produces a force equal and opposite to the acceleration force. The pendulum torquer output returns the pendulum to its null position. A d-c voltage proportional to acceleration is obtained from a precision resistor in series with the pendulum torquer. This d-c voltage is a direct measure of acceleration.

Gyros. (See figure 2.1-35.) The gyros are of the single-degree-of-freedom type; they can process in only one phase of three orthogonal axes. The spin axis is the axis of rotation for the gyro spin motor. For any force exerted at right angles to the spin axis (in the plane of the input axis), a precession occurs because the gyro flywheel resists changes in the position of the plane in which it developes its angular momentum. The developed opposing force acts in a third plane and tends to cause rotation of the gyro float. Therefore, for any rotation about the gyro input axis, force is developed to cause rotation about the gyro output axis. Each gyro comprises two major assemblies: a primary structure and a spin motor assembly.

Primary Structure. The primary structure is formed by two machined castings, which support a float and a pickoff and torquer. Two sapphire endstones in the primary structure support the float pivots. Part of the primary structure is filled with a high-density viscous fluid that supports the float and completely fills the space between the primary structure and the float. A bellows at one end of the primary structure expands and contracts with changes in gyro temperature to prevent damage to primary structure. The float provides structural support for the gyro spin motor and wheel, and a frictionless support for the output pickoff. The specific gravity of the viscous fluid in the gyro changes with changes in temperature; for this reason, the temperature of the gyros must be closely maintained. An advantage of flotation is viscous damping, which provides an integrating action that makes the gyro float less susceptible to vibration and shock along its input axis and cushioning of the float against shock and vibration along its output axis.

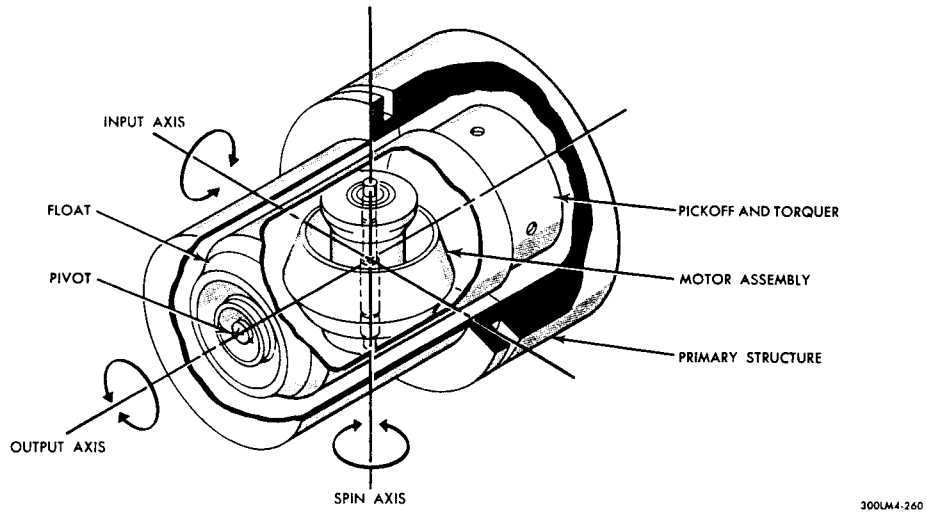

Figure 2.1-35. Abort Guidance Section - Gyro Assembly

Each gyro has thermistors mounted on its case to sense temperature. Thermistor resistance is 5,376±100 ohms at a nominal gyro temperature of +120° F; the temperature gradient, 112 ohms/°F at 120° F. The thermistor leads are routed to the ASA test connector.

The pickoff and torquer are installed in one end of the primary structure. The pickoff is an air-core differential transformer that has a four-pole primary and a two-pole secondary winding. The torquer is an eight-pole, D'Arsonval-type torque generator.

The pickoff can be considered as a transformer that has a stationary primary winding and a rotatable secondary winding. The primary, attached to the primary structure, is excited by a 22-volt, 8-kc signal from the ASA power supply. The secondary consists of an unexcited winding within the torquer core; the secondary rotates with the float. Because of its position relative to the excited primary, no voltage is induced in the secondary when the float is in its null position. When the float is rotated in either direction, the relative position of the secondary to the excited primary changes and the excited primary induces an a-c voltage in the secondary. The magnitude of this voltage is proportional to the amount of float displacement, and its phase is indicative of the direction of float displacement. This voltage is phase-demodulated by pulse torquing servoamplifier electronics, quantized, and converted to a torquing signal that is fed back to the torquer to return the float to the null position. The current flowing in the torquer, which is attached to the float and rotates with it, sets up a magnetic field that reacts with the field produced by a permanent magnet attached to the primary structure. The reaction between the magnetic field produced in the torquer coil and the magnetic field produced by the permanent magnet creates sufficient torque to return the float to its null position. Heat produced by current flow through the torquing coil adversely affects temperature-sensitive components of the gyro. The resultant errors appear in the output as displacing forces, which are minimized by the forced limit cycle mode. The forced limit cycle mode keeps the average heat around the gyro equal, which enables gyro drift to be predictable.

Spin Motor Assembly. The spin motor assembly is a four-pole, synchronous, hysteresis motor that is housed within the float. The assembly includes a wound-pole stator secured to the gyro float by stator shaft supports. Three-phase excitation of the stator produces a rotating magnetic field. The motor maintains at synchronous speed any load that it can accelerate from a dead standstill. The float chamber housing is filled with helium, which carries heat away from the motor. Each gyro has an auxiliary inductive pickoff near its motor. The pickoff is excited by a small magnet on the flywheel, each time the magnet passes the pickoff; for each revolution of the motor flywheel, a pulse is induced in the pickoff. The output from the pickoff is routed to the test connector so that, during test, motor velocity can be measured.

Frequency Countdown Subassembly. The frequency countdown subassembly controls timing functions. It receives a 1-microsecond pulse, with a repetition rate of approximately 7.8 microseconds (128 kpps), as the basic clock signal from the AEA. The subassembly processes these 1-microsecond pulses to generate signals for control of the timed functions of the other assemblies in the ASA. The following seven fundamental signals are generated by the frequency countdown subassembly:

- 64-kpps, 1-microsecond signal
- 1-kc ramp signal
- Early blanking gate (0 to 3 blocking gate)
- Late blanking gate (61 to 64 blocking gate)
- 8-kpps synchronizing signal
- 400-pps signals
- 1-kc utility pulse.

64-kpps, 1-Microsecond Signal. The 64-kpps, 1-microsecond-wide signal is the fundamental digit or bit representing the quantized analog signals from the gyros or accelerometers. These pulses (hereinafter called quanta) are gated through the pulse torquing servoamplifiers by a time-modulated signal produced in the gyro or accelerometer torquing loops. The number of quanta permitted as outputs from each pulse torquing servoamplifier during each forced limit cycle is dependent on the magnitude and direction of the force displacing the gyro or accelerometer sensors and the time this force is acting. If a force providing a 50° per second displacement of the referenced axis acts for one-half second, the gyro output magnitude indicates a total change of 2.5° in the angular position of the referenced axis. Similarly, if a force providing an accelerometer displacement equivalent to 5 fps acts for one-half second, the magnitude of the accelerometer output indicates a change in speed of 2.5 fps along the referenced axis.

For the gyros and their respective pulse torquing servoamplifiers, after algebraic manipulation of the nominal quanta count of 32 pulses per limit cycle, each quantum has the weight of 0.00088049°. For the accelerometers and ther respective pulse torquing servoamplifiers, each quantum has the weight of 0.003125 fps. Thus, for a positive output angle of 2.5°, the referenced gyro pulse torquing servoamplifier provides a total of 18,840 pulses (out of a possible maximum of 30,500) during the one-half second that the force acts on the gyro input (or reference) axis. For an output velocity of +2.5 fps, the referenced accelerometer pulse torquing servoamplifier provides 16,800 pulses (out of a possible maximum of 30,500) during the one-half second that the displacing force acts on the accelerometer sensitive axis. For a gyro-sensed negative output angle of 2.5°, the gyro pulse torquing servoamplifier provides a total of 13,160 pulses (out of a possible minimum of 1,500). For a velocity of -2.5 fps, the accelerometer pulse torquing servoamplifier provides 15,200 pulses (out of a possible minimum of 1,500).

1-kc Ramp Signal. The 1-kc ramp signal provides the basic timing functions for the dither signal used to retorque the accelerometers and gyros. This signal is applied to all pulse torquing servoamplifiers.

Early Blanking Gate (0 to 3 Blocking Gate). The early blanking gate is a pulse that occurs at the start of each forced limit cycle and whose width is equal to the width of three quantized pulses (approximately 46.8 microseconds). The early blanking gate provides a quanta-limiting function when the dither signal duty cycle is three or less pulses wide, to prevent occurrence of 0% duty cycle. A 0% duty cycle is equivalent to maximum negative torque acting on the sensors and produces scale factor nonlinearities, which are suppressed by a three-pulse limit. When the dither signal duty cycle is three or less pulses wide, the limiting function is enabled. Less than three pulses from a gyro pulse torquing servoamplifier represents an angular displacement about the gyro input axis of $(3 - 32) \times 10^3 \times 8.805 \times 10^{-4}$, or approximately -25.6°. Three or less pulses from an accelerometer pulse torquing servoamplifier represents an angular displacement about the accelerometer input axis of $(3 - 32) \times 10^3 \times 3.125 \times 10^{-3}$, or approximately -90.625 fps.

Late Blanking Gate (61 to 64 Blocking Gate). The late blanking gate is a pulse that occurs at the end of each forced limit cycle and whose width is equal to the width of three quanta periods (approximately 46.8

microseconds). The late blanking gate is used to prevent a 100% duty cycle. The output from a gyro pulse torquing servoamplifier represents an angular displacement of $(61 - 32) \times 10^3 \times 8.805 \times 10^{-4}$, or approximately +25.6°. When the duty cycle is more than 61 pulses wide, the output from an accelerometer pulse torquing servoamplifier represents a velocity of $(61 - 32) \times 10^3 \times 3.125 \times 10^{-3}$, or +90.625 fps.

8-kpps Synchronizing Signal. The 8-kpps synchronzing signal synchronizes the dc-to-dc converter in the ASA power supply. The converter contains a Royer oscillator, which drives the main output power stage of the converter. When power is applied, the oscillator free-runs at approximately 6 kc. When the d-c outputs come up to the proper voltage, power is supplied to the frequency countdown subassembly, which then provides an 8-kpps synchronizing signal for the oscillator. The oscillator then drives the main power stage of the converter at an 8-kc rate. Use of a separate oscillator driver and a power output stage reduces the starting power requirements.

400-pps Signals. The 400-pps signals generated in the frequency countdown subassembly are used to develop the gyro spin motor drive. There are four of these signals: one primary and three secondary. The primary signal is developed from the basic 8-kc synchronizing signal and is used as a reference for comparing the secondary signals. The three secondary signals are a 400-pps signal 180° out of phase with the reference (antireference), a 400-pps signal 90° out of phase with the reference (quandrature), and a 400-pps signal 180° out of phase with the quadrature signal (antiquadrature). All these signals are applied to the ASA power supply for further signal processing.

1-kc Utility Pulse. The 1-kc utility pulse has a 50% duty cycle at the forced limit cycle rate. This pulse triggers the ramp generator in the ASA, and synchronizes test equipment to the forced limit cycle period during test.

Fast Warmup Controller. The fast warmup controller provides heater power to bring the ASA up to operating temperature within the allotted warmup time. The controller comprises a thermal sensor, two flat-pack resistive networks, four transistor matched pairs, two zener diodes, and three ordinary diodes. Three heater control transistors and three heaters mounted on the controller housing are also part of the fast warmup circuitry. The thermal sensor senses the internal ASA temperature and provides a proportional d-c analog to the regulation and heater driver electronics that maintain the total fast warmup power constant.

Fine Temperature Controller. The fine temperature controller maintains ASA operating temperature at a nominal 120° ±0.2° F. For maximum operating efficiency, the controller is directly supplied with 28-volt d-c power from the LM primary power source. The controller has two thermal sensors, which sense ASA internal temperatures and provide a proportional d-c analog to the detecting electronics. The controller provides switched, rather than continuous, power to the activate temperature heaters. It comprises four transistor matched pairs, three resistive flat-pack networks, two integrated circuit amplifiers, and a unijunction transistor operated as a ramp generator. A transistor matched pair and a single transistor used as a heater control device, mounted on the housing, are also part of the fine temperature controller.

Power Supply. All a-c and d-c power required by the ASA is provided by its power supply, which receives 28-volt primary power and synchronizing signals from the frequency countdown subassembly. In addition to the d-c voltages for use by ASA subassemblies, other d-c voltages are produced by the power supply for its internal use. The a-c voltages are used by the accelerometers, gyros, and pulse torquing servoamplifiers. The subassemblies of the ASA that use a-c and d-c power are as follows:

- The +28-volt d-c power is used by the current regulators and budget drivers in each pulse torquing servoamplifier.
- The +12-volt d-c power is used to bias the amplifiers in the accelerometers and to bias integrated circuit amplifiers in the pulse torquing servoamplifiers.
- The +4-volt d-c power is used in the frequency countdown subassembly and the pulse torquing servoamplifiers to bias logic integrated circuit modules.
- The -12-volt d-c power is used as bias voltage in the pulse torquing servoamplifiers.

- The -6-volt d-c power is used as bias voltage in the pulse torquing servo-amplifiers.
- The -2-volt d-c power is used as bias in the frequency countdown subassembly and to bias logic integrated circuit modules in the pulse torquing servoamplifiers.
- The 6.3-volt, 8-kc power is used by the demodulators in the pulse torquing servoamplifiers.
- The 22-volt, 8-kc power is used to excite the pickoffs in the gyros.
- The 1.5-volt, 8-kc power is used to excite the pickoffs in the accelerometers.
- The 29-volt, 400-cps, three-phase power is used to drive the gyro spin motors.

2.1.4.4.2 Abort Electronics Assembly. (See figure 2.1-36.)

The AEA consists of a memory subassembly, a central computer, an input-output subassembly, and a power subassembly.

Memory. The AEA memory is a coincident-current, parallel, random-access, ferrite-core memory with a capacity of 4,096 words (18 bits each). The cores are arranged in square planes; each core is subjected to X- and Y-coordinate selection. There is one plane for each bit in the word; the arrangement consists of 64 rows and 64 columns. The number of words in the memory is equal to the number of cores in a bit plane. An address to the computer is specified by an X-coordinate and a Y-coordinate; it refers to the core at that location in all 18-bit planes.

The memory core stack is divided into two sections: temporary memory (2,048 words) and permanent memory (2,048 words). The temporary memory stores replaceable instructions and data. Temporary results may be stored in this memory and may be updated as necessary. Checkout routines may be loaded during checkout and subsequently discarded. Each core in the temporary memory is threaded by an X-selection winding, a Y-selection winding, a sense winding, and an inhibit winding. All windings, except the inhibit winding, are single turn. There are 18 sense and inhibit windings. They thread all cores in a single bit plane. Each bit phase has an associated sense amplifier and inhibit driver. In the permanent memory, each core is threaded by a sense winding and Y-selection winding. The inhibit winding in the permanent memory is omitted and the X-selection winding passes only through cores that represent zeros. The sense windings, Y-selection windings, and sense amplifiers are common to the temporary and permanent memories.

The cycle time of the memory is 4 microseconds. The addresses of the temporary storage locations are 0 through 3777_8; the addresses of the permanent storage locations, 4000_8 through 7777_8.

The binary state of a core is read by applying equal pulses to the X and Y drive lines that cross the desired bit. This applies an effective full-select current $+I_S$ to the selected core and drives it to the 1 state. All other cores threaded by the pulsed X and Y drive lines receive $+I_S/2$. If, while reading, the selected core is changing from the 0 state to the 1 state, a signal is present across the sense winding. This signal is read by the sense amplifier as a 0. If the core is in the 1 state at the start of reading, no signal appears across the sense winding. Absence of a signal is read by the sense amplifier as a 1. In the permanent memory, a selected core that is threaded by both an X-selection and a Y-selection winding switches from the 0 state to the 1 state and is, therefore, read as a 0. A selected core that is not threaded by an X-selection receives only a pulse of $+I_S/2$ and is thereby always read as a 1.

When a bit is read, the core is left in the 1 state. To achieve nondestructive readout, the word read must be written back into the memory. When writing, equal pulses ($-I_S/2$) are applied to the X- and Y-selection lines. Because the polarity of these selection currents is opposite to that used in reading, the X- and Y-drivers must be bidirectional. Applying $-I_S/2$ to an X- and Y-selection line causes the

selected bits to switch to the 0 state. If a 1 is to be written in the temporary memory, $+I_S/2$ is applied to the inhibit line simultaneously with pulsing of the X and Y lines. The inhibit current pulse overlaps the X- and Y-selection currents to preclude partial switching of the selected core to the 0 state.

The system logic is such that only 0's can be written into the memory. The 1 state is brought about by inhibiting the writing of 0's. Therefore, the cores of the word selected must be set to the 1 state before information can be written into the cores. This core setting is accomplished by performing the read operation, which sets all cores to the 1 state, before the write operation. No inhibit current is required in the permanent memory because all cores that were in the 0 state can be restored to 0 by applying X and Y write currents ($-I_S/2$ each). Cores that were in the 1 state remain 1's because they were subjected to a total current of only $-I_S/2$.

The memory operates in three modes: read-restore, read-clear, and clear-write. At the beginning of a memory cycle, the central computer supplies the memory with an initiate-memory-cycle signal, a mode signal, and an address. Address information is in a 12-bit address register in the central computer. Decoding is performed within the memory. The address register always contains the address location at the beginning of a memory cycle. During the read-restore mode, the contents of the location specified by the address register are read from the memory into the memory register (M-register). The read-restore mode is used for the temporary and permanent memories. The read-clear mode is similar to the read-restore mode, except that the information is not restored to the memory. This mode applies only to the temporary memory and when it is unnecessary to restore information after reading. In the clear-write mode, the contents of the M-register are written into the location specified by the address register. The word to be written is transferred into the M-register during the second microsecond of the memory cycle.

Central Computer. The central computer comprises an address register (L-register), a memory register (M-register), an index register (X-register), a program counter (P-register), cycle counter (C-register), an operation code register, adder, accumulator (A-register), and a multiplier-quotient register (Q-register). The registers are interconnected by a parallel data bus. Central-computer operations are executed by appropriately timed transfer of information between these registers, between the memory and the M-register, and between the accumulator and input-output registers. The adder, M-register, Q-register, and accumulator form the basis for execution of arithmetic operations.

Address Register. The address register is a 12-bit static register that is loaded under AEA control, from the least significant 12 bits of the data bus. The address register holds the address of the memory location to which access is requested.

Memory Register. The memory register (M-register) is an 18-bit static register, which is loaded from the memory cores or the data bus. The register holds data that are to be transferred between the central computer and the memory, by the data bus. The data bus is a collection of gates through which data (up to 18 bits in parallel) may transfer from one register to another. Data transferred from the memory are held by the M-register as they are placed on the data bus. During this time, data transfer is a read-and-restore operation. Data transferred to the memory from the central computer are held by the M-register as they are written into the memory. The A-register (accumulator) holds the multiplicand during multiplication, the dividend during division, the addend during addition, and the minuend during subtraction. The A-register is loaded by clearing it, then adding the contents of the M-register to it.

Index Register. The index register is a three-bit ripple counter that is used for operand-address modification. When an indexed instruction is executed, the effective operand address is computed by a logical OR operation between the index register and the three least significant bits of the operand address. When a transfer and text index instruction is executed, the index register is decreased by one if the counter is greater than zero, and the next instruction is taken from the location specified by the address field of the transfer and text index instruction. If the index register is zero, the counter is not decreased, and the next instruction is taken in sequence. The index register is loaded under program control, from the least significant three bits of the data bus.

Program Counter. The program counter is a 12-bit ripple counter, that is loaded from the least significant 12 bits of the data bus by execution of a transfer instruction. The program counter holds and generates instruction addresses in sequence.

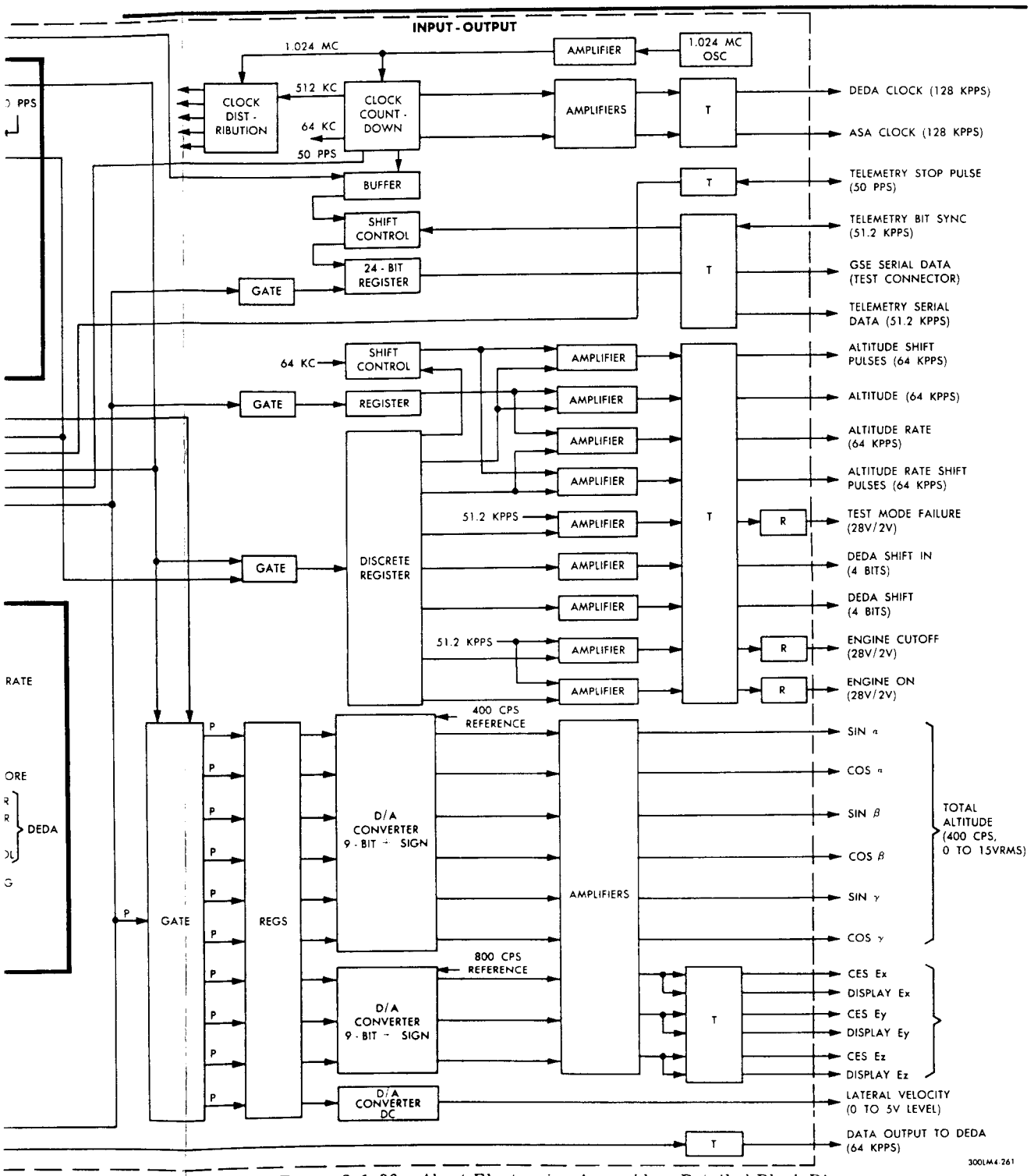

Figure 2.1-36. Abort Electronics Assembly - Detailed Block Diagram

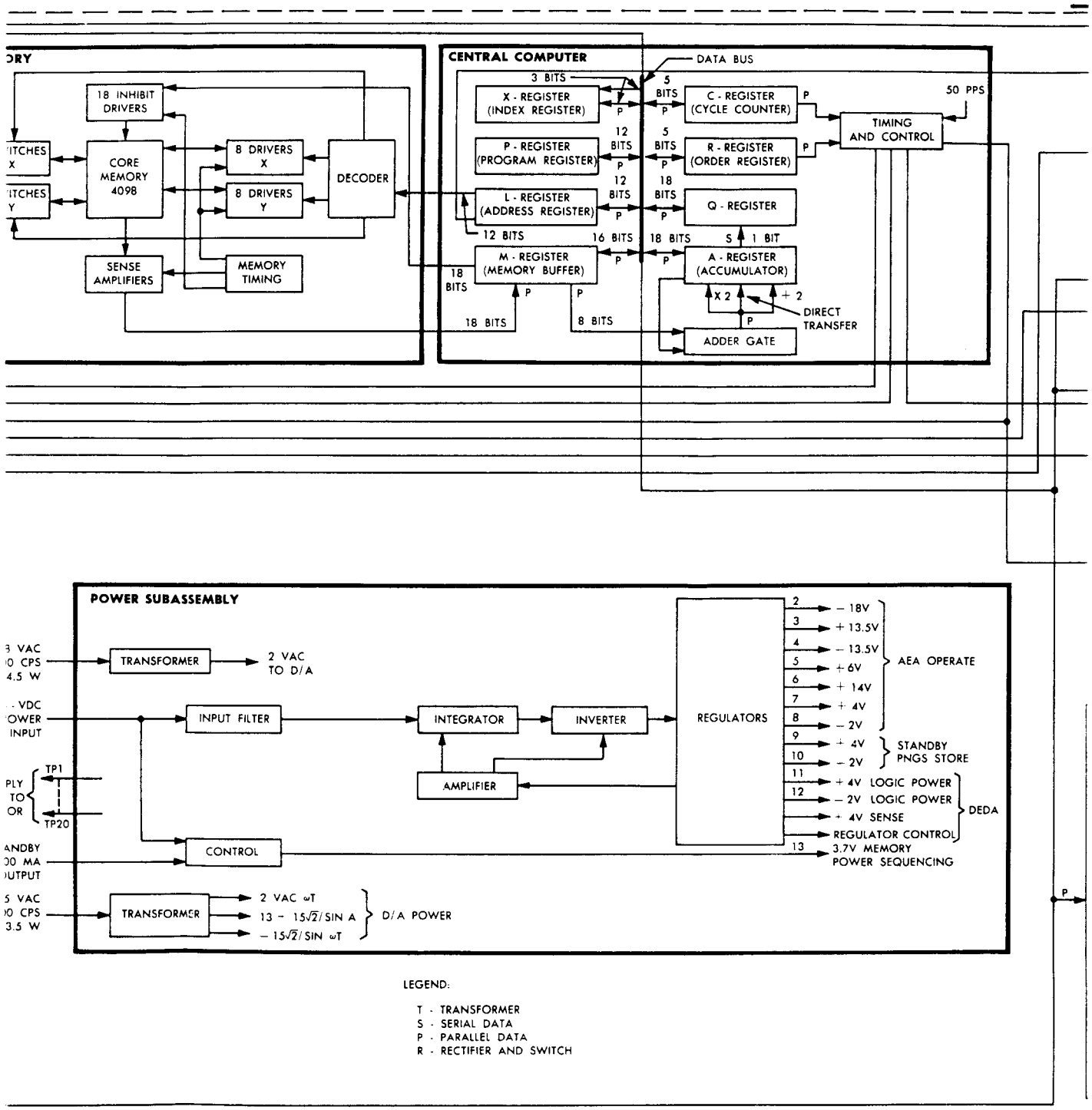
ORY
18 INHIBIT DRIVERS
ITCHES X
ITCHES Y
CORE MEMORY 4098
8 DRIVERS X
8 DRIVERS Y
DECODER
SENSE AMPLIFIERS
MEMORY TIMING
CENTRAL COMPUTER
DATA BUS
3 BITS
X - REGISTER (INDEX REGISTER)
5 BITS
C - REGISTER (CYCLE COUNTER)
50 PPS
TIMING AND CONTROL
12 BITS
P - REGISTER (PROGRAM REGISTER)
5 BITS
R - REGISTER (ORDER REGISTER)
12 BITS
L - REGISTER (ADDRESS REGISTER)
18 BITS
Q - REGISTER
12 BITS
16 BITS
18 BITS
S
1 BIT
M - REGISTER (MEMORY BUFFER)
A - REGISTER (ACCUMULATOR)
18 BITS
X 2
÷ 2
DIRECT TRANSFER
18 BITS
8 BITS
ADDER GATE
POWER SUBASSEMBLY
3 VAC
0 CPS
4.5 W
TRANSFORMER
2 VAC TO D/A
- VDC
OWER
INPUT
INPUT FILTER
INTEGRATOR
INVERTER
REGULATORS
AMPLIFIER
PLY
TO
OR
TP1
TP20
ANDBY
00 MA
UTPUT
CONTROL
5 VAC
0 CPS
3.5 W
TRANSFORMER
2 VAC ωT
13 - 15√2/SIN A
- 15√2/SIN ωT
D/A POWER
2 - 18V
3 + 13.5V
4 - 13.5V
5 + 6V
6 + 14V
7 + 4V
8 - 2V
AEA OPERATE
9 + 4V
10 - 2V
STANDBY PNGS STORE
11 + 4V LOGIC POWER
12 - 2V LOGIC POWER
+ 4V SENSE
REGULATOR CONTROL
DEDA
13 3.7V MEMORY POWER SEQUENCING
P
LEGEND:
T - TRANSFORMER
S - SERIAL DATA
P - PARALLEL DATA
R - RECTIFIER AND SWITCH

M

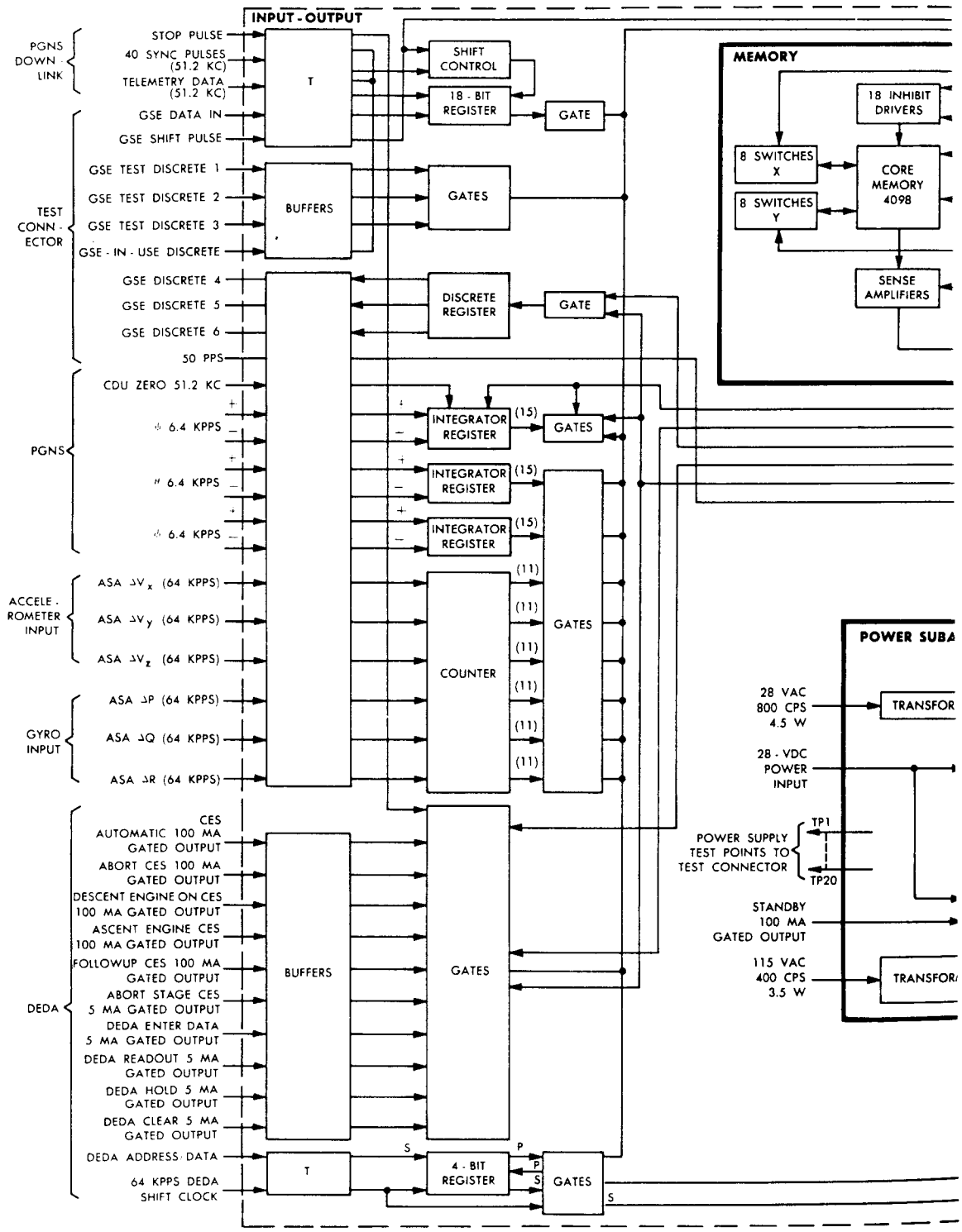
INPUT - OUTPUT
PGNS DOWN - LINK
STOP PULSE
40 SYNC PULSES (51.2 KC)
TELEMETRY DATA (51.2 KC)
TEST CONN - ECTOR
GSE DATA IN
GSE SHIFT PULSE
GSE TEST DISCRETE 1
GSE TEST DISCRETE 2
GSE TEST DISCRETE 3
GSE - IN - USE DISCRETE
GSE DISCRETE 4
GSE DISCRETE 5
GSE DISCRETE 6
50 PPS
PGNS
CDU ZERO 51.2 KC
6.4 KPPS
6.4 KPPS
6.4 KPPS
ACCELE - ROMETER INPUT
ASA ΔVx (64 KPPS)
ASA ΔVy (64 KPPS)
ASA ΔVz (64 KPPS)
GYRO INPUT
ASA ΔP (64 KPPS)
ASA ΔQ (64 KPPS)
ASA ΔR (64 KPPS)
DEDA
CES AUTOMATIC 100 MA GATED OUTPUT
ABORT CES 100 MA GATED OUTPUT
DESCENT ENGINE ON CES 100 MA GATED OUTPUT
ASCENT ENGINE CES 100 MA GATED OUTPUT
FOLLOWUP CES 100 MA GATED OUTPUT
ABORT STAGE CES 5 MA GATED OUTPUT
DEDA ENTER DATA 5 MA GATED OUTPUT
DEDA READOUT 5 MA GATED OUTPUT
DEDA HOLD 5 MA GATED OUTPUT
DEDA CLEAR 5 MA GATED OUTPUT
DEDA ADDRESS DATA
64 KPPS DEDA SHIFT CLOCK
T
BUFFERS
BUFFERS
T
SHIFT CONTROL
18 - BIT REGISTER
GATE
GATES
DISCRETE REGISTER
GATE
INTEGRATOR REGISTER
INTEGRATOR REGISTER
INTEGRATOR REGISTER
(15)
GATES
COUNTER
(11)
GATES
GATES
4 - BIT REGISTER
GATES
MEMORY
18 INHIBIT DRIVERS
8 SWITCHES X
8 SWITCHES Y
CORE MEMORY 4098
SENSE AMPLIFIERS
POWER SUBA
28 VAC 800 CPS 4.5 W
TRANSFOR
28 - VDC POWER INPUT
POWER SUPPLY TEST POINTS TO TEST CONNECTOR
TP1
TP20
STANDBY 100 MA GATED OUTPUT
115 VAC 400 CPS 3.5 W
TRANSFOR

GN&

Cycle Counter. The cycle counter is a five-bit counter that controls shift instructions and certain long orders. The counter is loaded from the six least significant bits of the M-register.

Operation Code Register. The operation code register is a five-bit static register that is loaded under software-control, from the five most significant bits of the data bus. The register holds the five-bit order code during its execution.

Adder. The arithmetic section is designed around an 18-bit, 3-microsecond parallel adder. Two 18-bit registers (the A-register and M-register) furnish the inputs to the adder. The adder changes the contents of the A-register by adding or substracting information (true or complement data, respectively) from the M-register. Three microseconds are required for the carry to propagate and the correct sum to be available at the adder outputs after the M-register information is gated into the adder. At the end of the 3-microsecond period, the sum is clocked into the A-register, replacing its previous contents (augend). A one-bit shift (either left or right) may be implemented simultaneously by gating the output of the adder into adjacent bits of the A-register. The data bus is not used to interconnect the adder with the A-register or M-register.

Accumulator. The accumulator is an 18-bit static register (A-register). It communicates, in parallel, with the adder and the data bus, and serially with the Q-register for shifting operations such as multiplication, division, and double-length shifts. The accumulator holds the results of most arithmetic operations; it is used to communicate with the input or output registers.

Multiplier-Quotient Register. The multiplier-quotient register (Q-register) is an 18-bit two-way shift register that communicates, in parallel, with the data bus and serially with the accumulator. The Q-register holds the least significant half of the double-length product after multiplication and initially holds the least significant half of the double-length dividend for division. After division, it holds the unrounded quotient. For double-length shifting operations, the Q-register is logically attached to the low-order end of the A-register. After execution of a transfer and set Q-instruction, the Q-register holds a transfer instruction with an address field set to one greater than the location of the transfer and set Q-register instruction.

Timing. Timing is controlled by an eight-bit register and a three-bit register. These registers produce the timing signals required to control all operations of the central computer.

Data Bus. The data bus consists of gates through which data (up to 18 bits in parallel) may transfer from one register to another. A typical transfer consists of 18 bits of data from the A-register to the M-register. When this occurs, the timing and control logic generates two control signals. The first control signal gates all 18 bits of the A-register onto the data bus for 2 microseconds (some data bus transfers take 3 microseconds); at the same time, the second control signal gates the contents of the data bus into the clocked set input of the 18 M-register flip-flops. At the end of the second microsecond, the M-register is clocked and the information transfer is complete.

For several transfers from the data bus, both true and complement information is gated into the receiving register. However, for transfers into the P-register only selected true signals are gated; therefore, this register must always be cleared to 0's before receiving new information For transfers into X-, C-, and M-registers, only selected complement signals are gated; these registers must be cleared to 1's before receiving new information. Information transfer into most registers is via the clocked set-reset inputs at the appropriate clock time; however, the three registers (C, P, and X) connected as ripple counters are loaded from the data bus via the flip-flop direct set-reset inputs.

Input-Output Subassembly. The input-output subassembly consists of special registers, counters, amplifiers, and gates, which operate independently of the central computer, except when specifically accessed by a particular input or output order. There are four basic types of registers in the input-output subassembly: integrator, ripple counter, shift, and static. These registers operate independently of the central computer, except when they are accessed during execution of an input or output instruction. All transfers of data tables 2.1-5 and 2.1-6 between the central computer and the input-output registers are in parallel. The PGNS Euler angles are accumulated in three integrator registers, each of which consists of a 15-flip-flop shift-register, a half-adder/subtractor, and control logic. The registers shift 15 bit positions at 512 kc upon receipt of each new pulse input, to serially add or subtract

Table 2.1-5. Abort Electronics Assembly - Input Signal Characteristics

Nomenclature	Routing	Signal Description	Remarks
AGS telemetry stop	ISS to AEA	50-pps signal; indicates completion of telemetry shift for one digital word	
AGS telemetry shift pulses	ISS to AEA	51.2 kpps (burst of 24 pulses, 50 times per second); shifts telemetry data out of AEA	
28-volt, 800-cps reference	CES to AEA	Sinusoidal excitation for digital-to-analog converters in AGS	±0.5 vrms and ±1% frequency accuracy
Automatic	CES to AEA	Discrete used to put AEA in automatic submode	Definitions: 1 - Ground 0 - Open circuit
Abort	CES to AEA	Discrete indicating abort but that staging has not occurred	Definitions: 1 - Ground 0 - Open circuit
Follow-up	CES to AEA	Discrete used to put AEA in followup submode	Definitions: 1 - Ground 0 - Open circuit
Abort stage	CES to AEA	Discrete indicating abort and that staging is initiated	Definitions: 1 - Ground 0 - Open circuit
PGNS alignment signals: $-\Delta\theta$, $+\Delta\theta$, $-\Delta\psi$, $+\Delta\psi$, $-\Delta\phi$, $+\Delta\phi$	PGNS to AEA	Digital pulse train (64 kpps maximum), denoting negative and positive angular increments of three PGNS gimbal angles	Gimbal angles are used during PGNS-to-AGS alignment, to define the inertial reference frame.
CDU zero	PGNS to AEA	51.2-kpps pulse train used to reset PGNS angle input registers	Definition: On - Application for 300 milliseconds (minimum)
PGNS telemetry downlink stop	PGNS to AEA	50-pps signal indicating termination of PGNS telemetry downlink shift operation	
PGNS telemetry bit-synchronizing pulse	PGNS to AEA	51.2-kpps pulse train used to shift in PGNS telemetry downlink data	Burst of 40 pulses with period of 20 milliseconds each
AGS initialization (downlink data)	PGNS to AEA	51.2-kpps signal comprising 40-bit words; used to initialize AGS navigation	Burst of 40 pulses with period of 20 milliseconds each
Descent engine on	Descent engine to AEA	Discrete indicating state of descent engine	Definitions: 1 - Ground, engine on 0 - Open circuit, engine off
Ascent engine on	Ascent engine to AEA	Discrete indicating state of ascent engine	Definitions: 1 - Ground, engine on 0 - Open circuit, engine off

Table 2.1-6. Abort Electronics Assembly - Output Signal Characteristics

Nomenclature	Routing	Signal Description	Remarks
Total attitude signals: sine α, cosine α, sine β, cosine β, sine γ, cosine γ	AEA to FDAI	0- to 15-vrms, 400-cps, sinusoidal signals for total attitude display	Scale factor: 30 millivolts per step Computation rate: 25 times per second
Altitude signal (h)	AEA to displays	64-kpps signal with word frequency of >five times per second, used for altitude display	Resolution: 2.3 feet per bit (15-bit word)
Altitude rate signal ($\dot{h}$)	AEA to displays	64-kpps signal with word frequency of > five times per second, used for altitude display	Resolution: least significant bit 0.5 foot per second (14 bits plus sign)
Lateral velocity (Vyb)	AEA to displays	D-C analog (-5 to +5 vdc), dynamic range -200 to +200 feet per second	Resolution: 25 mv/fps
Shift pulses for h and $\dot{h}$	AEA to displays	64 kpps	
Attitude error signals E_X, E_Y, E_Z	AEA to CES and displays	0- to 4.5-vrms, 800-cps, sinusoidal, body-referenced, altitude error signals for steering and display	Resolution: 300 millivolts per degree ±5% with -70° to +78° range

one from the previous count. The counting is inhibited momentarily when an input transfer to the A-register via the data bus is required. The registers are reset to zero by a 51.2-kc pulse input on the CDU zero line. Data from the ASA gyros and accelerometers are accumulated in six 11-bit flip-flop ripple counters. The inputs to these counters are inhibited when they are accessed by the central computer; they are reset to 0 after each access. The four-bit DEDA register, the 18-bit input telemetry register, the 24-bit output telemetry register, and the 15-bit register that is time shared for altitude and altitude rate are all implemented as shift registers. The first three of these registers are asynchronous (shifted by an external shift clock); the other one has associated shift controls and generates shift clocks in the AEA. In each case, shifting is inhibited during parallel access by the central computer. All the other registers are static flip-flop registers. The D/A registers are loaded in parallel, via the data bus, from the A-register. The discrete register is changed by setting or resetting a specific flip-flop within the register with a specific output order (unique address); the A-register is not involved in changing the discrete register.

Combinations of certain individual input-output addresses can be made, within an input or output instruction, to facilitate setting or resetting a group of registers or discretes. Only addresses that have the same most significant octal character can be combined. To combine one or more addresses, each address (excluding the most significant character) is added numerically. For example, combining the addresses of all six 11-bit counters would result in an address of 617. An input instruction with the address 617 would reset all the counters.

Integrator Registers. Three integrator registers accumulate PGNS angles θ, ϕ, and ψ. The PGNS angles are represented by asynchronous pulse train signals, with a frequency range of 0 to 6.4 kpps. Each integrator register has two input lines: one for positive pulses and one for negative pulses. These registers operate during the standby mode, when the central computer logic is off.

The integrator registers are up-down counters that serially add or subtract one count per pulse input. Each integrator register consists of an input buffer section, a shift control section, and a 15-bit shift register section with half-adder and control logic. The input buffer section synchronizes incoming PGNS pulses with the AEA clock and provides temporary storage for one pulse. The shift control section allows the register to shift the appropriate number of times for each pulse input from the input buffer.

Input Counters. Six input counters accumulate ASA gyro and accelerometer data. These data (ΔV_x, ΔV_y, ΔV_z, ΔQ, ΔR, and ΔP) are represented by pulse trains with a frequency range of 0 to 64 kpps. These pulses are asynchronous to the AEA. The input consists of an input buffer section and an 11-bit ripple counter with control logic.

Downlink Telemetry Register. The downlink telemetry register is an 18-bit input register. It receives a serial 40-bit PGNS downlink telemetry word. The first 18 bits are retained in the register. The 40-bit word is shifted into the register by externally controlled shift pulses at a rate of 51.2 kpps. These shift pulses are asynchronous to the AEA. A 1 in the input data is represented by a pulse (coincident with a shift pulse); a 0, by lack of a pulse. A stop pulse from the external control indicates the end of a transmitted word. The register is used by GSE to enter data into the central computer, but cannot be used by GSE and telemetry simultaneously. An 18-bit word is used by the GSE. The register consists of a shift pulse buffer section and a 18-bit shift register section with shift control logic. The shift pulse buffer section synchronizes the input shift pulses with the AEA and provides a delay between data pulses received and shift pulses received.

Altitude-Altitude Rate Register. The altitude-altitude rate register is a 15-bit output register. It is used to output, serially, altitude and altitude rate data. A 1 in the output data is represented by a pulse; a 0, by lack of a pulse. There are separate output data and output shift pulse lines for the altitude and altitude rate. An output discrete selects the data and shift pulse lines to be used. Before data are entered into the register, the output discrete corresponding to the desired output must be set.

Output Discretes. There are 11 output discrete flip-flops in the AEA. Each discrete can be used independently of the others. Except for the two DEDA discrete flip-flops, all the output discrete flip-flops are set and reset by different addresses. The DEDA output discrete flip-flops are automatically reset by the hardware; they cannot be reset by the program. The DEDA discrete flip-flops are clock-set by the appropriate output instructions, and clock-reset 1 microsecond later. These discretes output a single pulse, nominally 1-microsecond wide, each time the flip-flop is set. The test mode failure output discrete is automatically set if the 20-millisecond timing pulse occurs during any instruction other than the delay instruction. The engine-on output discrete flip-flops are automatically reset during the power turn-on sequence. The altitude and altitude rate output discretes have a common reset address. These discretes are used for internal control of the altitude-altitude rate register. They enable the desired serial data and shift pulse output lines. The GSE output discretes are used to gate out a 128-kpps pulse train. The ripple carry inhibit output discrete is used internally to test the adder carry mechanism.

Output Telemetry Register. The output telemetry register, a 24-bit output register, outputs telemetry serial data or GSE serial data. The telemetry data word is 24 bits long; the GSE data word, 18 bits long. Telemetry and GSE cannot use the register simultaneously. A 1 in the output data is represented by a pulse; a 0, by lack of a pulse. Each data word is shifted out with the most significant bit first. Data in the register are shifted out by asynchronous, externally controlled, shift pulses at a rate of 51.2 kkps. Twenty-four shift pulses are sent for telemetry data; 18, for GSE data. The external control sends a stop pulse to the output telemetry register when all shift pulses have been sent.

The telemetry word list comprises a 50-word block of data. (Refer to table 2.1-7.) Each output telemetry word comprises 24 bits (a six-bit identification (ID) code followed by an 18-bit central computer word).

The identification code represents the sequential position of the telemetry word in the word list (01_8 to 62_8). The data "equation symbol" are the same as those used in the AGS software program. The central computer word contains codes or numeric data. The numeric data are in binary 2's complement format. The most significant bit (bit No. 0) is a sign bit (0 for positive data; 1 for negative data). The remaining bits are numbered (1 through 17), from most significant to least significant.

DEDA Register. The DEDA register is a four-bit input-output register, which receives or sends four bits of serial data. A 1 in the serial data is represented by a pulse; a 0, by lack of a pulse. Data are shifted in or out by asynchronous, externally controlled, shift pulses at a rate of 64 kpps. These input shift pulses are gated out as data pulses when the DEDA register is in an output mode. Bits No. 1 through 4 of the DEDA Register are transferred to bits No. 1 through 4 of the accumulator during an input instruction and loaded with bits No. 14 through 17 of the accumulator during an output instruction. The DEDA register consists of a shift pulse buffer section and a four-bit shift register with control logic.

GN&C

Clock Countdown Subassembly. The clock countdown subassembly develops 512-kpps, 128-kpps, and 64-kpps and 50-pps timing signals from the 1.024-mc system clock. The clock countdown subassembly consists of a toggle flip-flop, three counter sections, and associated gating.

Power Subassemblies. Two independent power supplies are associated with the central computer. One functions in the standby and operate mode; it supplies power to clock-countdown circuits and to three integrating registers. The other power supply functions only in the operate mode; it supplies power to the remainder of the central computer. The outputs of the latter power supply are available in sequence so as not to compromise the memory, monitors the input voltage and output voltages and provides a control signal (PS13). The control signal is true if the central computer is in the operate mode, the input voltage is at least 20 volts dc and all output voltages are at the proper levels.

Table 2.1-7. Abort Electronics Assembly - Telemetry Word List

Word No.	ID Code (Octal)	Equation Symbol	Lunar Binary Scaling	Least Significant Bit Weight	Unit	Description
1	01	$\delta 41$	-	-		DEDA readout mode flag; 1 in sign bit indicates DEDA processing is in readout mode.
2	02	DD	-	-	-	Most recent DECA data word in computer units
3	03	$\delta 38$	-	-	-	DEDA clear mode flag; 1 in sign bit indicates DEDA processing is in clear mode.
4	04	a_{11}	1	2^{-16}	-	Row No. 1 of direction cosine matrix
5	05	a_{12}				
6	06	a_{13}				
7	07	ADST	-	-	-	Octal address associated with most recent DEDA communication
8	10	a_{31}	1	2^{-16}	-	Row No. 3 of direction cosine matrix
9	11	a_{32}				
10	12	a_{33}				
11	13	h	25^{-3}	2^{8}	feet	LM altitude above mean earth (lunar) surface
12	14	$\underline{r}$	25^{-3}	2^{8}	feet	Components of LM inertial position
13	15					
14	16					
15	17	EONS10	-	-	-	Engine-on indicator and GUID CONT switch
16	20	$\underline{r}_c$	25^{-3}	2^{8}	feet	Components of CSM inertial position
17	21					
18	22					
19	23	r_f	25^{-3}	2^{8}	feet	Predicted value of LM radius at completion of current guidance routine, except in external Δv
20	24	ΔV_x	3	2^{-14}	fps	Compensated incremental velocity components accumulated per 20 milliseconds along X-, Y-, or Z-body-axis by corresponding X, Y, or Z accelerometer
21	25	ΔV_y				
22	26	ΔV_z				

Table 2.1-7. Abort Electronics Assembly - Telemetry Word List (cont)

Word No.	ID Code (Octal)	Equation Symbol	Lunar Binary Scaling	Least Significant Bit Weight	Unit	Description
23	27	t_2	1	2^{-16}	sec	Least significant half of AGS absolute time
24	30	$\Delta\alpha_x$				
25	31	$\Delta\alpha_y$	-6	2^{-16}	rad	Compensated incremental components per 20 milliseconds of vehicle rotation about X-, Y-, or Z-body-axis, measured by X, Y, or Z gyro.
26	32	$\Delta\alpha_z$				
27	33	T_B	9	2^{-8}	sec	Time to LM engine burnout
28	34					
29	35	$\underline{V}$	13	2^{-2}	fps	Components of present LM inertial velocity vector
30	36					
31	37	μ_{8_T}	17	1	-	Ullage counter for telemetry
32	40					
33	41	$\underline{V}_c$	13	2^{-2}	fps	Components of CSM inertial velocity vector
34	42					
35	43	$\dot{h}$	13	2^{-2}	fps	LM altitude rate
36	44	ΔV_G	13	2^{-2}	fps	Magnitude of velocity to be gained for existing guidance mode
		V_{P0}	13	2^{-2}	fps	Predicted velocity to be gained in CDH burn
37	45	V_T	13	2^{-2}	fps	Total velocity to rendezvous in TPI
38	46	S_{12T}	3	-	-	S_{12} for telemetry
		T_{A0}	18	2	sec	Time from nominal CSI burn to CDH burn corresponding to best cost function for this computing cycle
39	47	t_{igC}	18	2	sec	Time from present to TPI maneuver
40	50					
41	51	$\underline{X}_{bD}$	1	2^{-16}	-	Components along X, Y, and Z inertial axes of unit vector commanding desired pointing direction for LM X-body-axis
42	52					
43	53	t_1	18	2^1	sec	Most significant half of AGS absolute time
44	54	S_{00}	-	-	-	Function selector by which submode logic is selected via DEDA
45	55	β's	-	-	-	Discretes that make up discrete word one
46	56	Δr	23	2^8	feet	Differential LM-CSM altitude after CDH burn
		q_{ld}	23	2^8	feet	Transfer orbit perifocus altitude in TPI
47	57	q_{LT}	23	2^8	feet	Perifocus altitude of present LM orbit
48	60					
49	61	$\underline{V}_d$	13	2^{-2}	fps	Sensed velocity increments along LM body-axis
50	o2					

Startup. To place the central computer in operation, the operator sets the AGS STATUS switch from STANDBY to OPERATE. The power subassemblies then apply power to the central computer in a predetermined sequence. When all operate voltages are at their proper levels, power supply signal PS13 remains 0 for at least 10 microseconds. During this 10-microsecond period, certain initial conditions are established in the central computer. These conditions are such that the central computer automatically accesses an instruction from a predetermined memory location. Central computer operation then continues under normal program control.

Shutdown. The central computer shuts down if the power supply input voltage drops below 20 volts dc; it restarts automatically when the proper input voltage is restored. If the central computer shuts down after reading from memory, but before restoring memory, information is lost. This is prevented by completing the current memory cycle while preventing initiation of additional memory cycles during shutdown. When the power supply input voltage is restored (20 volts dc) and the current memory cycle is completed, the central computer is ready to go through its startup sequence.

2.1.4.4.3 Data Entry and Display Assembly. (See figure 2.1-37.)

DEDA operation involves the display; shift register; bit, digit, and cycle counters; a data transfer sequencer; pushbutton entry, and data-AEA transfer.

Display. The three most significant digit positions (1, 2, and 3) of the shift register are decoded to form the address display. The next position (4) is decoded to form the sign display. The remainder of the digit positions (5, 6, 7, 8, and 9) are decoded to form the data display. The decoded digit for each numeric display provides an output for each segment of the display. The display segments for each digit are activated, via drivers, by outputs from the decoding logic associated with the respective four-bit digit positions of the shift register. The all 1's code in any digit position of the shift register deactivates the decode outputs, blanking the digit display.

Shift Register. The shift register accumulates and holds all information entered with the pushbuttons or transferred from the central computer for display. The shift register contains 36 bits comprising nine digits. Codes presented from the pushbuttons are entered directly into the four least significant bits of the register and positioned for display. Address and data bits transferred from the central computer are entered into the least significant bit position of the register. Address and data bits to be transferred to the central computer are taken from the most significant bit position of the register.

Bit, Digit, and Cycle Counters. The bit counter is a six-bit ripple counter. The counter accumulates the number of clock pulses gated to the shift register and, in conjunction with the digit and cycle counter, controls positioning of digit codes in the shift register as they are entered with the pushbuttons. The bit counter also controls the transfer sequence as information is transferred to or from the central computer. The digit counter, a five-bit shift register counter that is incremented on the final count of the bit counter, detects operator errors. Error's arise when pushbuttons are pressed out of sequence, while entering data into the shift register. Such errors cause the OPR ERR light to go on. The cycle counter is a four-bit shift register whose main purpose is to control the cycling of inputs to the shift register.

Data Transfer Sequencer. The data transfer sequencer consists of a two-step counter and flip-flops that buffer and control data transferred from the central computer. The sequencer controls the timing of shift pulses and information bits transferred to or from the central computer and provides control for shifting the contents of the shift register during the transfer.

Pushbutton Entry. To enter data with the pushbuttons, the CLR pushbutton must be pressed. This action sets the entire shift register, which blanks the display and resets the digit, bit, and cycle control counters, and operator error logic circuits. A flip-flop that enables the keyboard (pushbutton) control logic is also set. This flip-flop is reset when the ENTR or READOUT pushbutton is pressed.

The CLR, ENTR, and READOUT pushbuttons, when pressed, engage two separate, isolated switches, each of which routes a signal. When the CLR pushbutton is pressed, one signal clears the display; the other is routed to the AEA, preparing it for an entry or readout operation. When the ENTR or READOUT pushbutton is pressed, one signal prepares the DEDA for information transfer; the other, triggers the

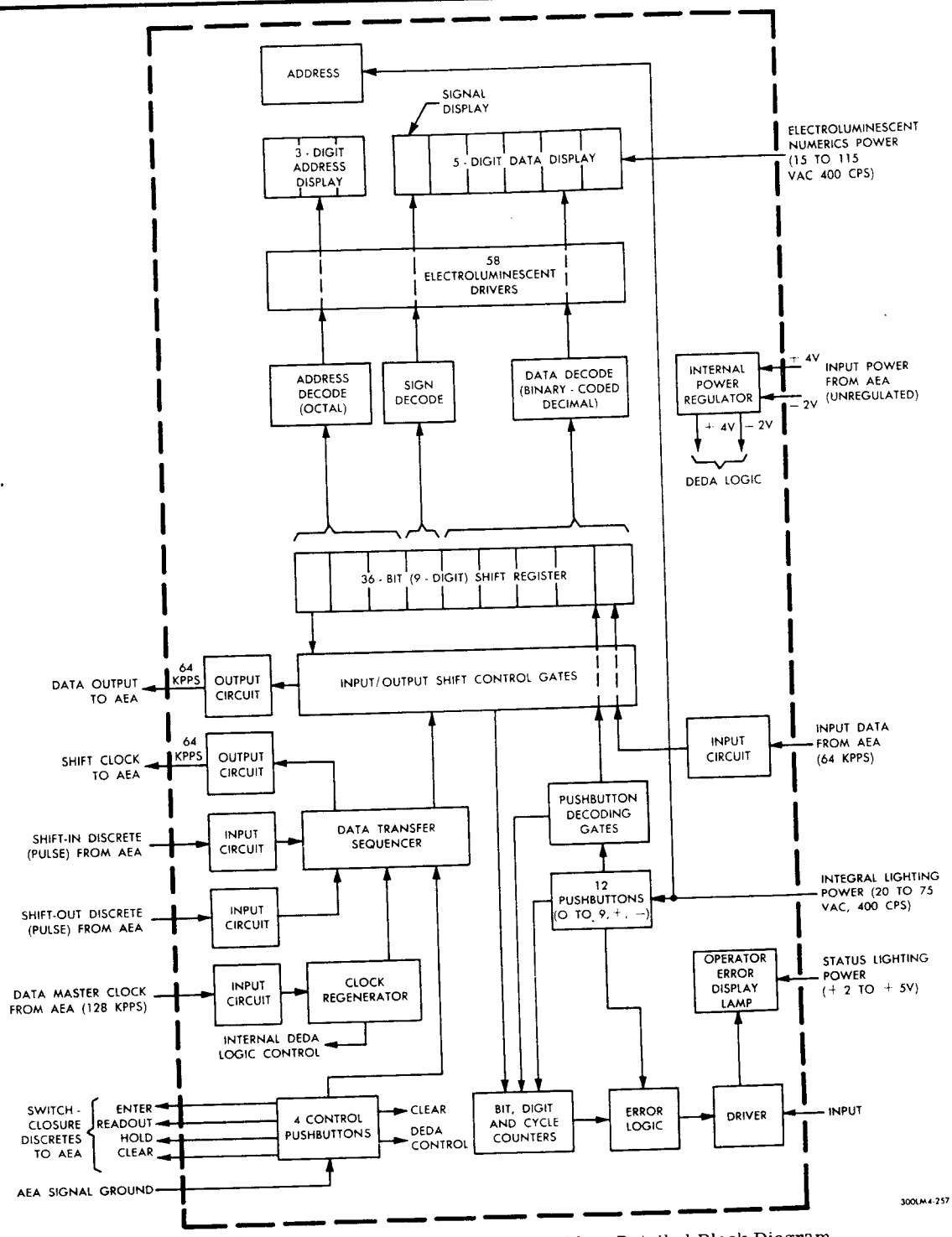

Figure 2.1-37. Data Entry and Display Assembly - Detailed Block Diagram

start of AEA command operation. If the CLR, ENTR, or READOUT pushbuttons are not pressed far enough to actuate both switches, only one signal is routed instead of two and the resulting incomplete operation depends upon which switch closes.

As the pushbuttons are pressed, binary-coded-decimal (BCD) signals are fed to gates, which, in parallel, set or reset the four least significant flip-flops of the shift register. These gates are controlled by the pushbutton strobe, a delayed pulse generated in the keyboard control logic. The pushbutton strobe also sets bit counter enable flip-flop and cycle control flip-flop. The bit counter enable flip-flop enables a gate, which feeds clock pulses to the shift register. When clock pulses add up to 31, as counted by the bit counter, another gate is enabled. This gate resets the bit counter enable flip-flop on the next clock (pulse 32), terminating the shift register clocks, and enables a clock pulse that is fed to the digit counter, incrementing the counter by one.

Digit codes entered into the shift register are positioned in their proper location by the cycle counter as the register is clocked. The first digit is positioned in the most significant end of the shift register, the second digit in the next most significant digit location, and so on until the ninth (last) digit is entered. The cycle counter positions the digit codes by enabling gates, which cause the information in the shift register to circulate out of the most significant end into the eighth digit position in the register while holding the current pushbutton input in the least significant digit position. At a time determined by the current state of the digit and bit counters, a gate that resets the cycle control flip-flop to allow the current input to shift through the register, behind the information previously entered, is enabled.

If pressing the ENTR or READOUT pushbutton results in an operator error or if either pushbutton is pressed during an operator error condition, the central computer recognizes the error by detecting 1's in positions that normally contains 0's. Pressing the CLR pushbutton resets the operator flip-flop.

Data-AEA Transfer. Upon entering nine digits into the shift register with the pushbuttons, and visual verification that an operator error condition does not exist, the ENTER pushbutton may be pressed to start the data transfer sequencer. The central computer responds to the enter signal by sending a shift-in discrete to the DEDA. This discrete sets a flip-flop, which initiates data transfer to the central computer. Data are transferred in a two-step operation controlled by the data transfer sequencer. During the first step of the shift-in sequence, the most significant bit of the shift register is gated with a 1-microsecond-wide clock pulse and fed to an output circuit. During the second step of the shift-in sequence, a shift pulse is fed to the central computer, the contents of the shift register are shifted one bit position, and the bit counter is incremented by one.

Each shift-in discrete results in four cycles of the data transfer sequencer or transfer of one digit. The central computer sends shift-in pulses until the entire word is transferred. As the contents of the register are shifted from the most significant end, 1's are shifted into the least significant end. The display is blank after all digits have been transferred. Because of the data transfer sequencer four-cycle operation, the address digits, which are coded in three bits (octal), and the sign digit, which is coded in one bit, are alloted four bits in the shift register. The extra bits are used to provide redundant codes for blanking the respective displays or detection of an operator error by the central computer.

To display a word within the central computer, the three-octal-digit address of the word is entered into the shift register and the READOUT pushbutton is pressed. The central computer responds by sending shift-in discretes, which transfer the address digits to the central computer. The central computer then sends a series of shift-out discretes. Each shift-out discrete sets a control flip-flop, which enables the shift register to enter bits transferred from the central computer.

During the first step of the shift-out sequence, a shift pulse is fed to the central computer, which transmits a data bit back to the DEDA. The DEDA stores the data bit in a buffer flip-flop. During the second step, the buffered data bit is shifted into the least significant bit of the shift register as the register contents are shifted one bit position. Simultaneously, the bit counter is incremented by one. As for shift-in discretes, the data transfer sequencer cycles four times for each shift-out discrete; the computer must send a shift-out discrete before transfer of each digit.

The central computer may continually update the DEDA display by sending repeated sequences of nine shift-out discretes with accompanying data. Pressing the HOLD pushbutton stops the central computer from sending shift-out discretes after the next full word has been transferred to the DEDA; the contents

of the shift register remain unchanged. Pressing the READOUT pushbutton causes the central computer to resume sending shift-out discretes; the contents of the shift register change accordingly. In this mode of operation, pressing the READOUT pushbutton does not cause an operator error.

2.1.4.4.4 DEDA Operation.

DEDA operation is initiated by pressing the CLR pushbutton. This enables data entry with the numerical pushbuttons (0 through 9). As each numerical pushbutton is pressed, its code is placed in a register for display in the order in which the pushbuttons are pressed. When the appropriate number of characters is entered, the ENTR or READOUT pushbutton is pressed. If the CLR, ENTR, or READOUT pushbutton is not pressed to the full extent of its travel, the OPR ERR light may go on or a condition may develop in which no action occurs. No false information is sent to, or readout of, the AEA when this occurs. However, the step(s) must be repeated. (Refer to the pushbutton-entry discussion in paragraph 2.1.4.4.3.)

The following paragraphs contain the operating procedures for the DEDA, using the front panel pushbuttons and electroluminescent readouts. Before performing these procedures, the appropriate cabin switches must be set to the on position, the AC BUS B: AGS (panel 11) and STAB/CONT: AEA and ASA circuit breakers (panel 16) must be closed, and the AGS STATUS switch (panel 6) must be set to OPERATE.

Data Insertion. The sequence of operations for inserting data into the AEA via the DEDA is as follows:

- Press and release CLR pushbutton.

  This operation clears the DEDA and blanks all lighted characters. The CLR pushbutton must always be pressed before any DEDA entry.

- Press and release three consecutive numerical pushbuttons.

  This operation identifies the address (octal) of the AEA memory word location into which the data are to be inserted. The AEA will not process data with an octal address larger than 704.

- Press and release pushbutton that corresponds to sign (+ or -) of data to be inserted.

- Press and release desired five consecutive numerical pushbuttons that correspond to the numerical value of data to be inserted (decimal or octal, as appropriate for entry). Refer to Apollo Operations Handbook, Volume II, paragraph 4.4 for DEDA inputs (addresses).

- Verify entry by comparing electroluminescent display with desired address and desired numerical value.

- Press and release ENTR pushbutton.

  This operation enters the word into the AEA and blanks the address and data displays.

Data Readout. The sequence of operations for reading the contents of an AEA memory cell is as follows:

- Press and release CLR pushbutton.

  This operation initializes the DEDA and blanks all lighted characters. The CLR pushbutton must always be pressed before any readout.

- Press and release three consecutive numerical pushbuttons.

  This operation identifies the address of the AEA memory core location from which data are to be extracted. The address is in octal form; it must not exceed the number 704. If a number larger than 704 is entered into the address, the DEDA readout will be extinguished when the READOUT pushbutton is pressed. Refer to Apollo Operations Handbook, Volume II, paragraph 4.4 for data that are DEDA-accessible from the AEA.

- Verify entry by comparing electroluminescent address with desired address.

- Press and release READOUT pushbutton.

  After the READOUT pushbutton has been pressed, the displayed quantity and its address are updated twice per second. The astronaut can hold a value on the display by pressing the HOLD pushbutton. This value is held on the display until the READOUT pushbutton is pressed (at which time the displayed quantity is updated twice per second) or until the CLR pushbutton is pressed (at which time the DEDA is initialized for the next command and the displays are blanked).

Decimal Point Location. There is no decimal point indication on the DEDA. To use the AGS correctly, the astronauts must have knowledge of the quantization of the decimal quantity being entered or read out. If a position variable has a quantization of 100 feet, then 42,300 feet is entered or displayed as +00423.

Operator Error. The OPR ERR light on the DEDA display panel goes on if the operator makes any of the following errors:

- Nine pushbuttons are not pressed and the ENTR pushbutton is pressed.
- Three pushbuttons are not pressed and the READOUT pushbutton is pressed.
- READOUT pushbutton is pressed after more than three digits are entered.
- More than nine pushbuttons have been pressed since the last pressing of the CLR pushbutton.
- The 8 or 9 pushbutton is pressed while loading the address portion of the word.
- The + or - pushbutton is not pressed in the fourth position of the nine-digit word.
- The + or - pushbutton is pressed in other than the fourth position.
- A quantity is being read out and the ENTR pushbutton is pressed.

The following operator errors do not cause the OPR ERR light to go on.

- If a number greater than 704 is entered into the address portion of the display along with other numbers, the DEDA exhibits an odd display when the ENTR pushbutton is pressed. The numbers shift and several entry slots are blanked.
- If a number greater than 704 is entered into the address portion of the DEDA and the READOUT pushbutton pressed, the DEDA is blanked.
- If an octal quantity is entered with a digit greater than 7 or if a number greater than its allowable range is entered via the DEDA, a computer-processing error results. If the address is read out, the display is different than what was entered.

Address values greater than 704, used for program instructions cannot be entered into the DEDA. If such entries are attempted, the symptoms described in the preceding paragraph occur. Normal operation is restored by pressing the CLR pushbutton.

2.1.4.4.5 Abort Guidance Section - Self-Test Routine.

The self-test routine continuously checks that the computer logic and memory are functioning properly. DEDA address 412 is used, in conjunction with the test, to indicate test results to the astronauts and to allow resetting of error indicators. If a readout of address 412 on the DEDA is performed, the following outputs are possible:

+00000 - Test not completed

+10000 - Test successfully completed

+30000 - Logic test failure

+40000 - Memory test failure

+70000 - Logic and memory test failure.

An additional output (+00000) permits the astronaut to reinitiate testing and reset the AGS warning light after failure is detected. When a failure is encountered during the test, the output in memory location 412 is displayed and the AGS warning light goes on; future tests are inhibited until testing is reinitiated. The error indicator is reset or testing reinitiated by entering +00000 in address 412. The astronauts need not monitor DEDA address 412 periodically, because the AGS warning light (panel 1) provides a visual indication of an error. However, as part of the AGS turn-on procedure, the DEDA check should be performed as a partial check of AGS warning light and computer operation.

2.1.4.4.6 Abort Guidance Section - Initialization Function.

Initialization comprises two functions: navigation initialization, and time initialization.

Navigation Initialization. The AGS accepts initialization inputs from the PGNS downlink (automatic) or from the DEDA (manual). Data are accepted when an initialized instruction has been entered through the DEDA during an unpowered flight phase of the mission. Data shall not be inserted during LM powered flight. Initialization is referenced to the AGS absolute time base and the AGS inertial reference frame at the time of initialization. Upon completion of initialization, an initialization-complete indication is generated and may be displayed via the DEDA upon request.

Ephemeris data from the LM and CSM are inputs for initialization. These inputs are initialized automatically via the PGNS downlink by entering 414+10000, and ENTR on the DEDA. Completion of automatic initialization is indicated by the DEDA address and data indicators being set back automatically to 414+00000. LM ephemeris data are initialized manually, using the DEDA.

The PGNS downlink data provide LM and CSM position, velocity, and epoch time, which are used to initialize LM navigation and CSM orbit parameters (state vectors). The data are provided in the AGS inertial coordinate frame. The LM and CSM epoch times are in the same time base as the AGS absolute time. The sequence in which the PGNS downlink data are used to initialize the AEA is given in table 2.1-8.

Table 2.1-8. PGNS Downlink Data Update Sequence

Initialization Sequence	Description	DEDA Address
1	Identification word	414
2	LM X-position, AGS coordinates	240
3	LM Y-position, AGS coordinates	241
4	LM Z-position, AGS coordinates	242
5	LM epoch time (most significant)	254
6	LM X-velocity, AGS coordinates	260
7	LM Y-velocity, AGS coordinates	261
8	LM Z-velocity, AGS coordinates	262
9	LM epoch time (least significant)	254
10	CSM X-position, AGS coordinates	244
11	CSM Y-position, AGS coordinates	245
12	CSM Z-position, AGS coordinates	246
13	CSM epoch time (most significant)	272
14	CSM X-velocity, AGS coordinates	264
15	CSM Y-velocity, AGS coordinates	265
16	CSM Z-velocity, AGS coordinates	266
17	CSM epoch time (least significant)	272

The sequence of the 17 words occurs at a basic rate of 50 words per second. The sequence is not interrupted. The word formats of the 17 downlink words are as follows:

Bit No.	0	1	2	3	4	5	6	7	8	9	10	11	12	13	14	15	16	17
ID Word	X	X	X	X	X	X	X	X	X	X	X	X	X	X	X	X	Y	Y
Data Word	1	S	X	X	X	X	X	X	X	X	X	X	X	X	X	X	Y	Y
X = 0 or 1, Y = Not applicable, S = Sign bit (0 or 1).																		

A stop pulse discrete, which is set after a new downlink word has been inserted into the downlink input register, will be available to the program. The stop pulse discrete is reset upon reading the downlink input register. The time interval between stop pulses is 20 milliseconds. The program interrogates the stop pulse discrete twice per 20-millisecond cycle, with at least a 1-millisecond separation. The input register is read only if the stop pulse discrete is set to ensure that the input register is not read while data are being shifted into the input register.

The three components of LM position are entered by keying address codes 240, 241, and 242, and the value and sign of the data, on the DEDA. The three components of LM velocity are entered by keying address codes 260, 261, and 262, and the value and sign of the data, on the DEDA. The LM epoch time (a multiple of 6 seconds) is entered by keying address code 254 on the DEDA. Keying 414 and +20000 on the DEDA completes initialization. When initialization is completed, the AEA is automatically set back to the attitude hold submode, as indicated by the DEDA display (414+00000). Manual initialization of CSM ephemeris data is identical with that for the LM, except for the address codes.

Time Initialization. Initialization of AGS absolute time consists of entering an absolute time of zero into memory. This is accomplished by keying 377 on the DEDA. AGS absolute time is not limited to zero, except by procedures. A time tag, referred to as epoch time, is associated with each state vector. Primary system time, referred to as ground elapsed time (GET) is referenced to the time of lift-off. Therefore, the epoch times are the values of GET at which the state vectors were determined. The LGC clock has a capacity of approximately 2.7 million seconds; the AEA clock, approximately 0.26 million seconds. This disparity requires a procedure for modifying the epoch time transmitted from the LGC to the AEA at initialization. Because the AEA does not require launch time, it is possible to modify epoch time with a subtractive time bias. This bias is the GET at which the AEA clock is started.

The procedure requires entering a verb in the DSKY and establishing an absolute time of zero on the DEDA. At the desired initialization time, the two ENTR pushbuttons are pressed simultaneously. The absolute time in the PGNS at the initialization time becomes the AGS time bias and may be read out in hours, minutes, and seconds via the DSKY. This time bias must then be subtracted from all subsequent times entered into the AGS (if the times are referenced to GET).

2.1.4.4.7 Abort Guidance Section - Modes of Operation.

The AGS has two major modes of operation: inertial reference and alignment. These modes are selected via the DEDA after the ASA has warmed up for 30 minutes, the AGS STATUS switch is set to operate, and the STAB/CONT: AEA circuit breaker is closed.

Inertial Reference Mode. When the AGS is in the inertial reference mode, it provides attitude error information and engine commands (on and off), which are used for vehicle stabilization and/or for directing vehicle abort. The inertial reference mode is always in one of the following submodes:

- Attitude hold
- Guidance steering
- Z-body-axis steering

All active steering modes couple attitude errors about the LM body axes to the autopilot (CES). The magnitudes of the angular errors are limited to +15° and -15°. The autopilot attitude turning rates are limited to +10°/second and -10°/second about the Y-body-axis and +5°/second and -5°/second about the X-body-axis and Z-body-axis, except after staging, with the DEAD BAND (panel 3) switch set to MAX. At that time, no rate limiting exists. AGS steering in no way protects the PGNS platform against gimbal lock. In the following discussions it is assumed that the GUID CONT switch is set to AGS, the LM is in orbit (lunar surface flag is not set), and the PITCH, YAW, and ROLL switches are set to MODE CONT.

Attitude Hold. The attitude hold submode generates steering commands to maintain the LM in the inertial attitude that existed when the attitude hold mode was first entered. Attitude hold can be entered by setting the MODE CONTROL: AGS switch to ATT HOLD or by using address 400 on the DEDA and entering +00000. Once the attitude hold mode is established, it can be released by causing the followup signal to be issued (GUID CONT switch set to PGNS or MODE CONTROL: AGS switch set to ATT HOLD and ACA in manual control) or by entering other than +00000 into DEDA address 400. The preferred method is to set the MODE CONTROL: AGS switch to ATT HOLD and orient the LM to the desired attitude, using the ACA. Reentering the attitude hold mode causes the LM to maintain the attitude that exists when the mode is reentered.

If the AGS is in the guidance steering submode (DEDA address 400 is +10000 and the MODE CONTROL: AGS switch is set to ATT HOLD), the AGS issues engine-on or engine-off commands that agree with the existing status of the engine being used. If the AGS issues engine-on commands and the MODE CONTROL: AGS switch is set to AUTO, attitude hold mode is entered by setting address 400 to +00000 via the DEDA. This causes engine-off commands to be generated.

Guidance Steering. The address for ordering guidance steering is 400; the entry is +10000. The guidance steering submode orients the LM so that the LM thrust vector points in the desired direction for achieving the objective of the selected guidance routine. The LM X-body-axis orientation also depends upon which engine is used. The RCS engines are assumed to thrust along the body axes. If the descent engine is used, the thrust vector is assumed to be along the +X-body-axis. If the ascent engine is used, the thrust vector is assumed to be displaced from the LM +X-body-axis by an amount equal to the nominal cant of the ascent engine. Because of thrust alignment errors, the actual thrust vector will not lie exactly along the nominal direction. Small velocity errors at engine cutoff may result. These errors, sensed by the AGS, can be removed through axis-by-axis thrusting (ΔV residual removal).

When the ascent engine is used, equations that compensate for the cant of the engine should also be used. DEDA address 411 should be entered with a value of +10000 before entering AGS guidance steering, to achieve desired orientation of the thrust axis. When the ascent engine is burned, the thrust direction is selected by the AEA, regardless of the value of the address 411 entry.

The AEA correction for the cant of the ascent engine is achieved by two octal constants (one for pitch and one for roll). The constants are preprogrammed into the central computer, but are DEDA-accessible so that they can be changed during the mission. The pitch constant is entered with the address 566. The value of the constant, entered in octal units of radians, should be positive if the engine causes a thrust acceleration component along the +Z-body-axis. Similarly, the yaw component is entered in octal form in units of radians via address 602. The sign of the value entered should be positive if the cant of the engine causes a thrust acceleration component along the +Y-axis direction.

The LM Z-body-axis can be controlled as follows:

- DEDA address 623+00000

  The LM Z-body-axis is driven parallel to the CSM orbit plane. If the +X-body-axis points ahead of the local vertical (posigrade), the Z-axis is below the local horizontal. If the +X-body-axis is behind the local vertical the Z-axis is above the local horizontal. If the X-body-axis is vertically upward, the Z-body-axis will be pointed horizontally forward. If the X-body-axis is pointed vertically downward the Z-body-axis will be directed horizontally opposite to the direction of motion.

- DEDA address 623+10000

  The LM Z-body-axis is driven parallel to a plane determined by its guidance steering unit vector W_b (DEDA entries 514, 515, or 516). This mode is normally used to maintain S-band communication during lunar orbit insertion. Unit vector W_b is entered in octal form and is nominally defined before the mission.

- X-axis override

  The Z-body-axis can be oriented to any desired position about the thrust axis by setting the ATTITUDE CONTROL: YAW switch to PULSE or DIR and by means of the ACA.

The gain in the E_x channel decreases toward zero as the +X-body-axis approaches a perpendicular orientation with respect to the specified plane. If +00000 is entered in address 623 and the X-body-axis is perpendicular to the CSM orbit plane, the gain in the yaw steering channel is zero for any orientation of the Z-axis. This situation is typical for earth-orbit missions, during which large out-of-plane maneuvers are performed. By specifying a unit vector W_b (X-axis) not normal to the CSM orbit plane and by entering +10000 into address 623, yaw steering control can be maintained.

The guidance steering submode controls three steering operations: prethrust steering, orbitial rate pitch steering, and open steering.

Prethrust steering is guidance steering (address 400 contains +10000) that is performed before ullage is sensed and thrusting, to orient the LM for the burn. Prethrust guidance steering is implemented by setting the GUID CONT switch to AGS, the MODE CONTROL: AGS switch to AUTO, and the ATTITUDE CONTROL: PITCH, YAW, and ROLL switches to MODE CONT, and entering +10000 into address 400. The AGS then orients the LM to the particular guidance mode selected (address 410). AGS steering orientation of the LM, before the engine burn, falls into two categories:

- CSI, CDH, external ΔV

  Before initiation of these maneuvers, the desired attitude of the LM is established in the local horizontal coordinate system. Before the CSI maneuver, if the CSI computations are being performed and if the AGS is in the guidance steering submode, the LM is oriented so that the X-body-axis is maintained horizontal and parallel to the CSM orbit plane.

- Direct transfer (TPI and Midcourse)

  If the AGS is in a direct transfer guidance routine and in the guidance steering submode, the vehicle orients itself to the desired attitude in inertial space and remains fixed in inertial space. When absolute time exceeds the TPI burn time t_{igC}, as would be the case for a midcourse maneuver when the rendezvous problem has not been retargeted, the guidance solution is in real time and LM attitude conforms to the changing solution.

Orbital rate pitch steering maintains the LM X-body-axis along the local horizontal, using the external ΔV guidance routine and the guidance steering submode. The AGS can maintain the LM at any attitude in a local vertical coordinate frame during free flight. The X-inertial-axis can also be maintained, using the CSI guidance routine and the guidance steering submode, because the CSI maneuver is horizontal. This procedure is ideal for use between the orbit insertion phase and the CSI maneuver phase because the desired calculations (CSI) are performed simultaneously. If the calculated CSI maneuver is a retrograde maneuver, the +X-body-axis points backwards and the Z-body-axis points along the local vertical and not toward the lunar surface.

During open steering, the AGS is in control and the ATTITUDE CONTROL: PITCH, YAW, and ROLL switches are usually set to MODE CONT. Any channel can be overriden by setting the switch for that channel to PULSE or DIR. In some instances, manually orienting one LM axis more than 90° from the desired direction (AGS-computed) can cause the LM to rotate through large angles about the two AGS-controlled axes. In attitude hold and guidance steering, X-axis override can be accomplished through any desired angle. In Z-body-axis steering, Z-axis override can be accomplished through any desired angle. If manual override of any other steering channel is desired, the attitude excursion about that axis should be limited to less than 90° from the desired orientation computed by the AGS.

Z-Body-Axis Steering. This submode is entered via the DEDA, using the address 400 and entering +20000. No DPS or APS thrust can be accomplished in this mode. The following options are available for specifying the desired direction of the Z-body-axis.

- DEDA address 507+00000

  Orient the Z-body-axis toward the estimated direction of the CSM (used during rendezvous radar acquisition).

- DEDA address 507+10000

  Orient the Z-body-axis in the desired thrust direction (used to perform small thrusting maneuvers along the Z-body-axis).

In either option, with the Z-axis pointed in the desired direction, the X-body-axis is oriented parallel to the CSM orbit plane. If the +Z-body-axis is pointed ahead of the LM, the +X-body-axis is above the local LM horizontal plane. If the Z-body-axis is behind the LM, the +X-body-axis is below the local horizontal plane. The gain in the roll channel (Z-axis) decreases toward zero as the +Z-axis approaches a perpendicular orientation with respect to the CSM orbit plane. When perpendicular, the gain in the roll steering channel is zero for any orientation of the +X-axis. In this submode, the X-body-axis can be manually controlled by setting the ATTITUDE CONTROL: ROLL switch to PULSE or DIR and operating the ACA.

Inertial Reference States. These states comprise followup, attitude control, and complete control.

Followup State. In the followup state, the AGS can perform the following functions:

- Maintain an inertial reference frame and provide total attitude signals for display
- Maintain the attitude error signals to the CES at zero (If automatic and followup discretes are present, error signals are computed.)
- Use accelerometer inputs from the ASA to calculate LM current position and velocity in the inertial reference frame
- Solve the LM abort guidance problem, using a specific guidance scheme
- Accept initializing information from the PGNS downlink or the DEDA
- Command the engine on if the ascent engine-on signal or the descent engine-on signal is present, and command the engine off otherwise.

The flight program and the AGS are in the followup state when the followup discrete is present. If the automatic discrete is present, the attitude error signals computed in accordance with the particular submode in which the program is operating are displayed. If the automatic discrete is absent, attitude error signals are set to zero.

In the followup state, the program issues an engine-on command every 40 milliseconds if the program is in the inertial reference mode and either the descent engine-on discrete or ascent engine-on discrete is present. Otherwise, the flight program issues an engine-off command every 40 milliseconds.

Attitude Control State. The flight program and the AGS are in the attitude control state when the followup discrete, the abort discrete, and the abort stage discrete are absent. In this state, attitude error signals computed in accordance with the particular submode in which the program is operating are used for attitude control and for display. If the automatic discrete is absent, the program is in the attitude hold submode. If the automatic discrete is present any submode is permissible.

When the system is in the attitude control state, the program issues an engine-on command every 40 milliseconds if the program is in the inertial reference mode and either the descent engine-on discrete or ascent engine-on discrete is present. Otherwise, the flight program issues an engine-off command every 40 milliseconds.

Complete Control State. The flight program and the AGS are in the complete control state when the followup discrete is absent and either the abort discrete or the abort stage discrete is present. In this state, attitude error signals computed in accordance with the particular submode in which the program is operating are used for attitude control and for display. If the automatic discrete is absent, the program is in the attitude hold submode. If the automatic discrete is present, any submode is permissible, except as follows:

- The program shall be held in the attitude hold submode when the abort stage discrete is present, from the time the ascent engine-on discrete is first received until a preselected time thereafter. The preselected time shall have a minimum range of 0 to 10 seconds.
- At the completion of a maneuver when the engine is commanded off because the conditions for issuing engine-on commands are no longer satisfied, the program automatically returns to the attitude hold submode.

When in the complete control state and the vollowing four conditions are simultaneously satisfied, the program issues an engine-on command every 40 milliseconds. Otherwise, the flight program issues an engine-off command every 40 milliseconds.

- The automatic discrete is present.
- The AGS submode selector has been set to guidance steering, via the DEDA.
- Either the ullage condition has been satisfied or the ascent engine has been burned while the LM is on the lunar surface.
- Either the magnitude of velocity to be gained exceeds a specified threshold or the projection of velocity to be gained along the X-body-axis is in the +X-body-axis direction and exceeds the nominal ascent engine cutoff velocity impulse.

The ullage condition is satisfied when the accumulated sensed velocity increments along the X-body-axis have exceeded a specified threshold in each consecutive 2-second computation cycle for three cycles. The ullage condition is reset and the count restarted if the accumulated sensed velocity increment along the X-body-axis falls below the specified threshold in any one 2-second computation cycle.

Alignment Mode. Alignment consists of initializing the AEA to obtain an attitude reference to a desired inertial reference. The AGS causes the attitude error signals to the CES to be reduced to zero during the alignment mode. In response to an alignment submode instruction (a DEDA entry), the inertial reference frame is aligned to a reference frame of the three alignment submodes: PGNS-to-AGS alignment, lunar alignment, and body-axis alignment.

The PGNS-to-AGS alignment submode aligns the AGS direction cosines to the attitude reference determined by PGNS Euler angles θ, ψ, and ϕ. (See figure 2.1-38.) The lunar alignment submode uses the local vertical sensed by the Y and Z accelerometers and a previously stored azimuth angle (δ_L), which is updated for lunar stay (subsequent missions) by the correction factor $\Delta\delta$, for an attitude reference frame. The body-axis alignment submode uses current LM attitude as the attitude reference.

PGNS-to-AGS Alignment Submode. This submode is used when AGS alignment is to be accomplished, using PGNS Euler angles. This submode is entered by keying the DEDA (400+30000, and ENTR); it should only be entered when the PGNS is operative.

Lunar Alignment Submode. The AEA is aligned so that the computational inertial reference axes (X_i, Y_i, Z_i) coincide with the axes of a selenocentric coordinate frame with the X-axis along the lunar local vertical

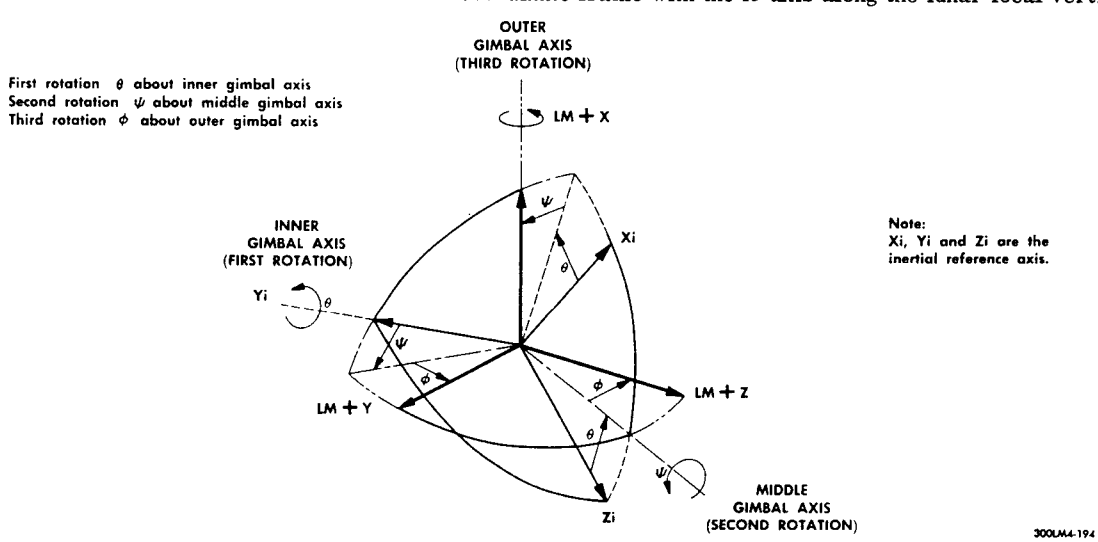

Figure 2.1-38. Euler Angles

(positive outward from the lunar center) and the Z-axis direction conceptually obtained by crossing the unit angular momentum vector of the CSM orbit with a unit vector along the X-axis. Compensated velocity increments from the ASA Y-accelerometer and Z-accelerometer are used to determine the local vertical with respect to the instantaneous LM coordinates.

The LM azimuth angle with respect to the CSM orbit plane at lunar touchdown is determined by storing, upon command of the DEDA, the AGS azimuth reference as defined by appropriate elements of the transformation matrix. An azimuth correction angle is subtracted from the stored reference to compensate for the affects of lunar rotation during lunar stay and for any CSM plane changes. The azimuth correction angle ($\Delta\delta$), which updates the inertial Z-axis direction, is inserted via the DEDA (address 547) before lunar alignment. This factor is provided to the astronauts via voice link.

The lunar alignment submode is entered by keying 400+40000, and ENTR on the DEDA. The astronauts can store the landing azimuth of the touchdown point by keying 413 and +10000 on the DEDA.

Body-Axis Alignment Submode. For the body-axis alignment (orbital alignment) submode, the AGS inertial reference frame is made coincident with the LM axes. Body-axis alignment is achieved by keying 400 +50000, and ENTR on the DEDA. To terminate this submode, the LM Pilot keys 400+00000 on the DEDA.

Calibration. Calibration of the gyros and accelerometers comprises the following:

- Lunar surface gyro calibration
- In-flight gyro and accelerometer calibration
- In-flight accelerometer calibration only.

Lunar Surface Gyro Calibration. This calibration is automatically selected by program control when calibration is selected via the DEDA. This program provides for gyro calibration, to update gyro fixed drift compensation while the LM is on the lunar surface. Lunar surface calibration requires that lunar alignment has immediately preceded it. The program then stores the existing transformation matrix to provide a reference attitude. The input angular increment is compensated by the calibration equations to remove the lunar rotation rate. The angular errors of the AGS indicated attitude (as defined by the transformation matrix) with respect to the reference attitude are computed and used to maintain the AGS attitude alignment with the stored reference attitude, and to correct the gyro drift compensation. The gyro calibration routine provides updated values of 1K1, 1K6, and 1K11. (Refer to table 2.1-9.)

After lunar touchdown, 413+10000 should be entered via the DEDA. This entry stores AGS attitude for possible future lunar alignment, sets the AEA lunar surface signal, and inhibits accelerometer calibration. The procedure for lunar surface gyro calibration is as follows:

- If the PGNS is operative, PGNS-to-AGS alignment is performed. If the PGNS is inoperative, lunar alignment is performed. The alignment must result in a Y-inertial-axis that is within 10° (half cone angle) of the lunar north polar axis.
- After alignment, 400+60000 via the DEDA is entered.
- Calibration requires 302 seconds. Completion can be verified by reading out DEDA address 400. At completion of calibration, the readout automatically returns to +00000 (attitude hold).

Table 2.1-9. Abort Guidance Section - Calibration Compensations

Equation Symbol	Address	Description
1K1	544	X-gyro drift compensation coefficient
1K6	545	Y-gyro drift compensation coefficient
1K11	546	Z-gyro drift compensation coefficient
1K19	540	X-accelerometer bias compensation coefficient
1K21	541	Y-accelerometer bias compensation coefficient
1K23	542	Z-accelerometer bias compensation coefficient

In-Flight Gyro and Accelerometer Calibration. This calibration is automatically selected by the flight program when calibration is selected via the DEDA, and provides in-flight calibration to update gyro fixed drift compensation. This calibration takes place during free fall with the program in the calibrate, lunar surface flag absent, and the LM in the attitude hold steering submode. The gyro drift calibration uses the PGNS IMU Euler angles as reference. The program automatically selects PGNS-to-AGS alignment during the first 2-second cycle, to provide initial alignment of the AGS to the IMU. For the remainder of the calibration period, the program computes the angular errors of the AGS indicated body-axes (as defined by the transformation matrix) with respect to the PGNS indicated body-axes (as defined by the IMU Euler angles). The angular errors are multiplied by an appropriate gain factor and added to the AGS compensated angular increments, causing the AGS attitude reference (transformation matrix) to remain aligned to the IMU reference. Simultaneously, the accumulated error signals are multiplied by another gain factor and added to the gyro drift compensation so that, in steady state, the compensation is equal to the gyro drift.

In-flight calibration of the accelerometer static bias compensation takes place concurrently with in-flight gyro calibration. The accelerometer velocity increments accumulated during free fall are multiplied by an appropriate gain factor and added to the accelerometer bias compensation so that the compensation is equal to the accelerometer bias. Accelerometer calibration provides updated values of 1K19, 1K21, and 1K23. (Refer to table 2.1-9.) In-flight calibration aligns the AGS; therefore, it is not necessary to follow in-flight calibration with a PGNS-to-AGS alignment. In-flight gyro and accelerometer calibration should not be performed when the PGNS is inoperative. Instead, in-flight accelerometer calibration only should be performed. The procedure for in-flight gyro and accelerometer calibration when the PGNS is operative and attitude rotation rate is less than 0.1° per second is as follows:

- Set MODE CONTROL: AGS switch to ATT HOLD.
- Enter 400+60000 via the DEDA.

  Calibration requires 302 seconds. Completion can be verified by reading out DEDA address 400. At completion of calibration, the readout returns to +00000 (attitude hold).

In-flight Accelerometer Calibration Only. This procedure is performed when the PGNS is inoperative. In-flight accelerometer calibration only does not affect AGS alignment. The procedure for in-flight accelerometer calibration only is as follows:

- Set AGS switch to ATT HOLD.
- Inhibit the RCS by setting the PITCH, ROLL, and YAW switches to DIR. The ACA must be left in detent (no manual control).

- Enter 400+70000 via the DEDA

  Calibration is completed in 32 seconds. [illegible]ever, it takes 302 seconds for readout of DEDA address 400 to return to +00000 [illegible]itude hold).

2.1.4.4.8 Abort Guidance Section - Guidance Routines.

The AGS program contains the following guidance routines:

- Orbit insertion
- Coelliptic sequence initiation (CSI)
- Constant delta altitude (CDH)
- Terminal phase initiation (TPI)
- External ΔV.

The routines are selected, using the DEDA. Refer to table 2.1-10 for the address and function of each guidance routine. Guidance calculations associated with the selected routine are completed every 2 seconds of the submode selected. The LM, however, will not maneuver in accordance with the selected routine unless the AGS has control of the LM and the guidance steering submode is selected.

Before beginning guidance operations, the AGS must be aligned and initialized with LM and CSM ephemeris data. Entry of LM and CSM ephemeris data is required because every guidance routine uses these data in the guidance and steering computation. Navigation data must be updated throughout the mission, using PGNS downlink data, the DEDA, or RR data. Navigation data must also be updated before CSI and TPI maneuvers. Propellant expenditure is highly dependent on the accuracy of these maneuvers.

Table 2.1-10. Abort Guidance Section - Guidance Routines

Address and Code	Routine	Function
410 + 00000	Orbit insertion	Engine and steering commands are generated to drive LM to specified orbit injection conditions.
410 + 10000	CSI maneuver	Engine and steering commands are generated to establish appropriate LM-CSM phasing TPI time.
410 + 20000	CDH maneuver	Engine and steering commands are generated to drive LM into orbit that is coelliptic with CSM.
410 + 30000	TPI search	AGS evaluates various direct transfer rendezvous solutions. Astronauts select desired solution. Thrusting is not performed with this routine.
410 + 40000	TPI execute	Engine and steering commands are generated to cause LM to be on CSM intercept trajectory.
410 + 50000	External ΔV	Engine and steering commands are generated to perform externally specified thrust maneuver.

Orbit Insertion Routine. The orbit insertion routine provides attitude commands and engine-off commands to obtain predetermined cutoff conditions. These conditions are defined by the following targeting parameters entered into the AEA via the DEDA:

- Insertion altitude; DEDA address 347
- Magnitude of the horizontal component of inertial velocity at burnout; DEDA address 507
- Altitude rate at burnout; DEDA address 423.

The attitude commands provide yaw steering of the LM into the CSM orbit plane by the time the cutoff conditions are attained. The capability of steering out a wedge angle of up to 2° is provided (assuming sufficient ΔV). When the velocity to go to cutoff (ΔV_g) reaches a preselected threshold, updating of the command attitude is terminated. The engine is commanded off when ΔVg reaches the nominal ascent engine tailoff velocity threshold and the total velocity to go is less than 100 fps.

Coelliptic Flight Plan Rendezvous Guidance. When the principal foci of two orbits are coincident and when the products of the length of the semimajor axis and eccentricity of each orbit are equal, the orbits are considered to be coelliptic. This implies that when the two orbits are coplanar, they have coincident centers and vacant foci. The guidance routines are based on the assumption that deviations from coplanarity are small. Coelliptic orbits have an essentially constant differential altitude (constant Δh).

The flight program contains a set of guidance routines for calculation of powered maneuvers required for the LM to execute a coelliptic flight plan for rendezvous with the CSM. This flight plan nominally calls for three powered maneuvers:

- CSI (coelliptic sequence initiate) maneuver
- CDH (constant Δh) maneuver
- TPI (terminal phase initiate) maneuver.

In the nominal coelliptic flight plan, the LM is placed in an orbit coelliptic with that of the CSM by executing the CSI maneuver, then the CDH maneuver. In both of these maneuvers, the horizontal component of thrust is maintained parallel to the estimated CSM orbit plane. The CSI and CDH routines compute and control these maneuvers. An additional capability is provided for removing out-of-plane velocity in the CSI and CDH maneuvers, by using the external ΔV routine for control. To enable this, the required incremental velocities computed by both the CSI and CDH routines are automatically furnished to the external ΔV routine to target, in advance, the in-plane components of the burn.

The final maneuver of the coelliptic flight plan sequence is the TPI maneuver, nominally a burn that places the LM on a direct intercept trajectory with the CSM. The maneuver is initiated when the angle of the LM-CSM line of sight with respect to the local horizontal is at a preferred value. The TPI routine computes and controls this maneuver; it may also be used for implementing subsequent midcourse correction maneuvers.

Coelliptic Sequence Initiation Routine. Coelliptic rendezvous is initiated by the CSI burn, followed by a CDH maneuver. The magnitude of the CSI burn is computed so that, after the CSI and CDH maneuvers, the LM arrives at the desired TPI time with the desired LOS angle to the CSM. The CSI and CDH maneuvers are computed in the AGS X-Z inertial plane. The CSI routine computes the magnitude of the horizontal velocity increment (parallel to the CSM orbit plane) required to satisfy targeting conditions.

The AGS time of the CSI routine is one targeting condition for the CSI maneuver. This entry is made by using DEDA address 275. Time to go until the CSI maneuver can be obtained by reading out address 313 on the DEDA.

After the CSI maneuver has converged to a solution, the time from the CSI to CDH can be obtained by using address 373 on the DEDA. Time until CDH (when less than 136 minutes) can also be obtained by using address 313. Other times available in the CSI routine are listed in the DEDA output list. (Refer to Apollo Operations Handbook, Volume II, paragraph 4.4, addresses 274, 275, and 377).

The angle that the projection of the LM-CSM LOS on the X-Z inertial plane makes with the LM local horizontal at the desired TPI time (positive, measured clockwise from the local horizontal forward of the LM when looking in the direction of the +Y-inertial-axis) is another targeting condition.

The CDH burn is performed at the time determined by the CSI routine. This time is the predicted time of LM arrival at the first or second crossing of the LM orbit line of apsides, following the CSI burn. A DEDA input (416+10000) specifies whether the CDH maneuver will be performed at the second crossing. Otherwise, it is assumed that the CDH maneuver will be performed at the first crossing. If the predicted radial rate (r_f) is nearly zero at CSI coast, it is possible that the subsequent coast orbit would be circular. Selection of first or second apsidal crossing becomes meaningless for a circular orbit.

The CSI routine is repeated three times every 2 seconds. The routine computes, and makes available for readout via the DEDA, the following parameters:

- CSI iteration error
- Time from CDH to TPI
- Predicted differential altitude in the coelliptic orbit
- Predicted coelliptic burn ΔV magnitude
- Sign and magnitude of predicted horizontal (CSI) ΔV
- Predicted time from CSI to CDH.

The CSI routine provides a real-time commanded attitude. The CSI horizontal ΔV solution is valid at CSI time (t_{igA}). When real time (t) becomes greater than t_{igA}, the CSI routine is computed in real time.

Constant Delta Altitude. The CDH routine computes, in real time, attitude commands and velocity increment required to make the LM and CSM orbits coelliptic. The CDH routine provides commanded attitude such that the horizontal component of vehicle X-axis thrusting is parallel to the CSM orbit plane.

The CDH routine is selected after completion of the CSI burn, by keying 410 and +20000 into the DEDA. When this occurs, targeting is accomplished automatically for the CSI routine, by the CSI computations. The CDH solution is computed for future time, predicted during the CSI routine, until real time exceeds the predicted burn time. The solution is thereafter computed in real time.

If the CDH maneuver does not follow the CSI maneuver, the time to go until the CDH maneuver must be entered as a targeting constant. This is accomplished by keying address 315 on the DEDA. Addresses 275, 310, and 377 are timing quantities available in this mode.

In a nominal mission, the CDH maneuver is assumed to occur after the CSI maneuver; therefore, targeting is accomplished automatically for the CDH maneuver by the CSI computations. The event timer is set by using the quantity $T\Delta$ (after the CDH routine is entered), which is the time to go until the CDH maneuver, if $T\Delta$ does not exceed 136 minutes. The times of interest during the CDH maneuver are listed in table 2.1-11.

Table 2.1-11. Time (Minutes) Quantities Available in CDH Mode

Address	Quantization	Equation Symbol	Description
310	0.01	T_Δ	Time to go until CDH maneuver
275	0.1	T_c	Time from CDH to nominal TPI maneuver predicted during CSI
275	0.1	J^1	Nominal time of TPI maneuver (targeting quantity)
313	0.01	T_{perg}	Time to perifocus of present LM orbit
377	0.1	t	AGS computer time

Terminal Phase Initiation Routine. The TPI maneuver begins the direct transfer to rendezvous. There are two direct transfer routines: one, primarily for mission planning (TPI search); the other, for performing the maneuver (TPI execute). The latter routine can also be used for mission planning if desired. In general, the routines are used together, in sequence, to perform the TPI maneuver.

During mission planning, the object is to determine when direct transfer should occur. This determination is based upon achieving the desired LOS angle between the LM and CSM. Once ignition time is determined, the AGS is switched to the alternate direct transfer routine and the maneuver is performed.

This routine is used in the coelliptic rendezvous scheme, following the CDH maneuver. The CSI and CDH maneuvers are performed so that, at the nominal TPI time, the phasing between the LM and CSM is such that the desired LOS angle is achieved.

Because of errors in the AGS (due to sensors, navigation, maneuver execution, etc), the desired LOS is not achieved at exactly the targeted TPI time. To determine when the desired LOS will be achieved and, thus, when to perform the maneuver, a direct transfer search guidance routine is available in the AGS (DEDA entry 410+30000). During this routine, the astronauts determine total velocity required to rendezvous, and perform the TPI maneuver based upon achieving a desirable value (TBD) of total velocity. The alternate direct transfer guidance routine (DEDA entry 410+40000) is used to actually perform the maneuver.

There are two modes that can be used for the TPI maneuver. Tables 2.1-12 and 2.1-13 define the time quantities of interest in each mode.

Table 2.1-12. Time (Minutes) of Interest for TPI Search Routine

Address	Quantization	Equation Symbol	Description
310	0.01	T_Δ	Input quantity. TPI search assumes TPI to occur in T_Δ minutes.
373	0.1	t_{igC}	AGS computer time of TPI maneuver; output quantity.
307	0.01	J^6	Input quantity. Time from TPI to intercept (assuming no burns after TPI).
311	0.01	T_r	Time to go until intercept; output quantity
313	0.01	T_{perg}	Time to perifocus of present LM orbit

Table 2.1-12. Time (Minutes) of Interest for TPI Search Routine (cont)

Address	Quantization	Equation Symbol	Description
377	0.1	t	AGS computer time
306	0.01	J^4	Time increment prior to rendezvous at which node is created
312	0.01	J^3	Stable orbit offset

Table 2.1-13. Time (Minutes) of Interest for TPI Execute Routine

Address	Quantization	Equation Symbol	Description
373	0.1	t_{igC}	Either input quantity or quantity obtained from TPI search mode. This is AGS computer time of the TPI maneuver.
310	0.01	T_Δ	Time to go until TPI maneuver; output quantity.
307	0.01	J^6	Input quantity. Time from TPI to intercept (assuming no burns after TPI).
311	0.01	T_r	Time to go until intercept; output quantity.
313	0.01	T_{perg}	Time to perifocus of present LM orbit
377	0.1	t	AGS computer time
306	0.01	J^4	Time increment prior to rendezvous at which node is created
312	0.01	J^3	Stable orbit offset

Epoch times input to the AEA via the DEDA are in units of minutes with a quantization level of 1/10 minutes or 6 seconds. Epoch data used in the AGS for navigation updates via the DEDA must be valid at a multiple of 1/10 minute. If not, position errors of three miles for lunar missions could result due to roundoff of epoch time via the DEDA.

External ΔV Routine. The external ΔV routine accepts components of a velocity-to-be-gained vector in local vertical coordinates entered via the DEDA. A commanded attitude maintains the LM X-axis toward the resultant of the velocity-to-be-gained vectors in real time, independent of the required burn time. When ullage is sensed, and thereafter until the AEA is switched from the external ΔV, the external ΔV components remain fixed in inertial space. If the external ΔV routine (DEDA entry 410+50000) is initiated early or late, the desired orbit at cutoff is not achieved. Large timing errors result in large differences between the actual orbit obtained and the orbit desired.

The AGS can maintain the LM in any attitude in a local vertical coordinate frame during free flight. The LM can be pitched at the orbital rate to maintain the X-axis along the local horizontal, using the external ΔV routine. A fictitious velocity-to-be-gained vector is entered via the DEDA to obtain the desired attitude.

2.1.4.4.9 Abort Guidance Section - Descent or Ascent Engine and Thrust Chamber Assembly Bur

When the LM is under AGS control during coasting flight, the AGS can fire the descent or ascent engine or thruster(s). The AEA is programmed in such a manner that translational thrust is applied

in certain nominal directions. (Refer to table 2.1-14.) The nominal cant angle used by the AGS is controlled by two constants in the AEA computer (DEDA-accessible in octal):

- 4K7 - Cant angle (radians) of thrust vector in the pitch plane. DEDA address 566. Positive sign indicates thrust vector is canted from the +X-body-axis toward the +Z-body-axis.
- 4K8 - Cant angle (radians) or thrust vector in the yaw plane. DEDA address 602. Positive sign indicates thrust vector is canted from the +X-body-axis toward the +Y-body-axis.

Table 2.1-14. Abort Guidance Section - Translational Thrust

Engine	Direction of Thrust Assumed by AEA
Descent	+X-body-axis
Ascent	Canted. Cant angle data are used by AEA to account for canted thrust direction.
TCA	The ±X, ±Y, ±Z thrust chamber assemblies assumed to thrust along ±X-, ±Y-, ±Z-body-axes, respectively.

Before in-orbit maneuvers, the astronauts choose which TCA(s) will be used. The AGS must be informed, via the DEDA, of the decision to fire the ascent engine, so that steering transients will not occur at the start of the burn. Before AGS-controlled orientation to the desired thrust attitude, the following DEDA selection should be entered or verified:

- DPS or RCS: DEDA entry 411+00000
- APS: DEDA entry 411+10000.

Regardless of the selection, the AEA assumes the canted thrust direction whenever the APS-on discrete is received. (See figure 2.1-39.)

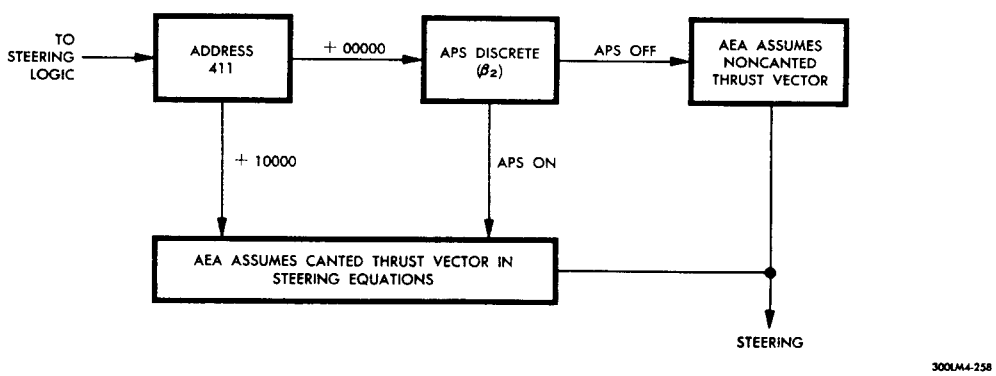

Figure 2.1-39. Canted Thrust Selection Logic

GN&

Descent or Ascent Engine Burn. To prepare for an engine burn under AGS control, the following conditions are required:

- Condition No. 1 - The FLUID CONT switch must be set to AGS. This removes the followup signal to the AGS.
- Condition No. 2 - The MODE CONTROL: AGS switch must be set to AUTO. This transmits an auto discrete to the AGS and removes the AGS from attitude hold.
- Condition No. 3 - The ABORT pushbutton must be pressed. This arms the DPS.
- Condition No. 4 - The ABORT STAGE pushbutton must be pressed. This arms the APS.
- Condition No. 5 - +10000 must be entered into DEDA address 400. This enables the engine-on signal and guidance steering.

Conditions No. 1, 2, and 5 are sufficient for the AGS to assume control and orient the LM with the selected guidance routine. However, to fire the descent or ascent engine additional conditions (conditions No. 6 or 7, and 8 must be met).

Velocity To Be Gained. For the engine-on discrete to be issued to the CES, one of the following conditions must be met:

- Condition No. 6 - The magnitude of the velocity-to-be-gained vector, as computed in the AEA, must exceed 100 feet per second.
- Condition No. 7 - The component (sign and magnitude) of the velocity-to-be-gained vector must exceed the engine tailoff ΔV value (currently +2.1 fps).

Ullage. Before an engine can be fired, the AGS must sense ullage. Ullage must be supplied manually by pressing the + X TRANSL pushbutton until the engine fires. The condition governing the AEA recognition of ullage is as follows:

- Condition No. 8 - The AEA recognizes whether the sensed velocity change per 2-second compute cycle equals or exceeds 0.2 fps in the +X-body-axis direction for three consecutive compute cycles.

If the sensed velocity increment drops below 0.2 fps on a 2-second compute cycle, an engine-off discrete is sent to the CES. Before the engine can be fired again, the AGS must again establish the ullage recognition condition. During the powered-flight abort staging sequence, the sensed velocity accumulated over any 2-second period will exceed 0.2 fps; therefore, ullage is maintained and the AEA generates continuous engine-on signals.

Satisfaction of Ullage Condition Due To Angular Accelerations. The maximum distance between the ASA and the LM center of gravity is approximately 10 feet in the +X-body-axis direction and 5 feet in the +Z-body-axis direction. There is effectively no displacement in the Y-body-axis direction. Because the ASA is offset in the Z-direction, angular accelerations about the pitch axis could cause the ullage condition to be satisfied. The required angular acceleration is slightly greater than $1°/\text{second}^2$ and must exist for a minimum of 6 consecutive seconds.

If all conditions for engine burn, except the ullage condition, are satisfied and the LM is to be reoriented through a large angle under AGS control, the engine STOP pushbutton must be pressed until LM reorientation has occurred, to avoid sending the engine-on command.

Conditions for descent or ascent engine burn are as follows:

- To fire the descent engine, conditions No. 1, 2, 3, 5, 8, and either or both 6 and 7 are sufficient.
- To fire the ascent engine, conditions No. 1, 2, 4, 5, 8, and either or both 6 and 7 are sufficient.

Lunar Surface Lift-Off. On the lunar surface ullage is automatically generated and the orbit insertion guidance routine generates a large value of velocity to be gained. To ascend to orbit insertion, the following are required:

- The GUID CONT switch must be set to AGS; the MODE CONTROL: AGS switch, to AUTO.
- The submode must be guidance steering (DEDA entry 400+10000).
- The AEA guidance routine must be orbit insertion (DEDA entry 410+00000).
- The ABORT STAGE pushbutton must be pressed. The AGS will issue an engine-on discrete igniting the ascent engine.

Manual Engine Operation. If an engine is fired by pressing the engine START pushbutton, it can only be shut down by pressing the engine STOP pushbutton (unless fuel depletion or staging occurs first). If the engine is manually fired, the AGS will not shut it down. When an engine is manually fired, the astronauts can monitor ΔV_{gx} (quantized at 1 fps) via DEDA address 500 and press the engine STOP pushbutton when ΔV_{gx} is near zero.

Thrust Chamber Assembly Burns. TCA translation can be used with AGS steering control when the following are performed:

- Conditions No. 1, 2, and 5 must be established in sufficient time for the LM to orient to the desired thrust attitude.
- DEDA address 500 must be selected for ΔV_{gx} readout.
- The ATT/TRANSL must be set to the desired number of jets (2 or 4).
- The engine STOP pushbutton must be pressed. This inhibits the engine-on discrete.
- The ABORT or ABORT STAGE pushbutton must be pressed. This provides for attitude hold at the end of the burn.
- At maneuver time, use the TTCA to null the DEDA reading.
- When ΔV_{gx} equal zero, reduce thrust to zero.

2.1.4.4.10 Abort Guidance Section - Thrust Termination.

When the LM is under PGNS control, the AGS outputs engine-on or engine-off discretes, which are followups of the actual engine condition. These discretes are inhibited when the GUID CONT switch is in the PGNS position. When the LM is under AGS control, the engine-off discrete is sent to the CES when the velocity-to-be-gained magnitude falls below the threshold value.

Ascent or Descent Engine. When the AGS sends an engine-off discrete to the CES, the ascent or descent engine thrust automatically terminates, provided the engine was not turned on by pressing the engine START pushbutton. Under AGS control, the engine-off discrete is generated if any of the following conditions occur:

- Velocity-to-be-gained magnitude is equal to or less than 100 fps and the component of the velocity-to-be-gained vector resolved along the +X-body-axis is equal to or less than 2.1 fps.
- Ullage recognition signal (less than 0.2 fps sensed ΔV in a 2-second computer cycle) is lost.
- Address 400 does not contain the value +10000.

Attitude Hold. If the MODE CONTROL: AGS switch is set to ATT HOLD during an AGS-controlled powered maneuver, the AGS is placed in an engine followup mode. The existing LM attitude and the engine-on discrete to the CES are maintained; an engine-off discrete is inhibited by the MODE CONTROL: AGS switch. The astronauts can assume manual attitude control by moving the ACA out of detent. When this option is used, thrust must be manually terminated. Returning the ACA to the detent position and setting the MODE CONTROL: AGS switch to AUTO allows the AGS to resume guidance control; thrust terminates when the velocity-to-be-gained magnitude has decreased to the threshold established for engine shutdown.

Thrust Chamber Assemblies. The following procedure applies to each axis individually if axis-by-axis translation is being performed (LM in attitude hold) or to the X-body-axis if AGS steering is used:

- Monitor, via the DEDA, the velocity-to-be-gained magnitude in the appropriate thrust direction. (Refer to table 2.1-15.)
- Terminate thrust manually with the TTCA when velocity to be gained (along the appropriate axis) is zero.

In the AGS steering mode, the LM is placed in attitude hold when thrust terminates. If the thruster burn has continued long enough (longer than 6 seconds) for the ullage recognition signal to be generated in the AEA, the AGS switches to attitude hold when ΔV_{gx} is equal to, or less than, 2.1 fps. If the burn is too short for ullage recognition or if thrusting along the Z-body-axis, the AGS orients the LM +X-body-axis along the direction of the residual ΔV vector after thrust termination. This could produce an undesired LM rotation in an attempt to align the +X-body-axis along the residual ΔV vector.

Table 2.1-15. Abort Guidance Section - Thrust Directions

Quantity*	DEDA Address	Units	DEDA (Least Significant Digit) Lunar Mission
ΔV_{gx}	500	fps	0.1
ΔV_{gy}	501	fps	0.1
ΔV_{gz}	502	fps	0.1

*These quantities are computed every 40 milliseconds and updated on the DEDA display every half second.

In addition, in the AGS steering mode, when velocity to be gained is less than 15 fps and the sensed ΔV in the +X-body-axis direction exceeds 0.2 fps in a 2-second computer cycle, the AEA ceases updating the desired thrust direction. To avoid undesired LM rotations, the procedure for performing TCA burns of less than 15 fps when AGS steering is used is as follows:

- The GUID CONT switch must be set to AGS; the MODE CONTROL: AGS switch, to AUTO.
- DEDA entry 400+10000 (guidance steering) must be verified.
- Immediately preceding the maneuver (within 10 seconds), the MODE CONTROL switch must be set to ATT HOLD.
- ΔV_{gx} must be monitored via DEDA address 500.
- The maneuver must be performed with the +X TRANSL pushbutton.
- TCA thrusting must be terminated when ΔV_{gx} is zero.

If the option to perform a Z-body-axis thruster burn with the LM Z-body oriented in the desired thrust direction is chosen (DEDA entries 400+20000 and 507+10000), set the MODE CONTROL: AGS switch to ATT HOLD when velocity to be gained along the Z-body-axis is less than 15 fps.

2.1.4.5 Control Electronics Section

2.1.4.5.1 Attitude Controller Assemblies. (See figure 2.1-40.)

The ACA performs the following functions:

- Supplies attitude rate commands proportional to ACA handle displacement, to the LGC and ATCA
- Supplies low amplitude pulse rotational acceleration open loop commands to ATCA/RCS during AGS control
- Supplies an out-of-detent discrete each time the ACA handle is out of the neutral position
- Supplies a followup discrete to the AEA each time the ACA is out of detent, when the AGS is in control and operating in the attitude hold mode. The followup discrete is present at all times.
- Provides a switch for the push-to-talk function, required for communications.
- Supplies 2-jet direct operation under AGS control, through the RCS secondary coils
- Provides for 4-jet direct operation, which is available at all times, through the RCS secondary coils as a manual override.

The ACA is used for closed-loop proportional rate commands in the attitude hold mode and for open-loop acceleration commands in the pulse, direct, and hardover modes. (See figure 2.1-41.)

For ACA proportional control, a 28-volt, 800-cps signal is applied to the primary coil of three proportional transducers. The secondary voltage of each transducer is proportional to ACA displacement about its input axis (one each for the roll, pitch, and yaw axes). When ACA displacement exceeds 0.5°, two sets of switch contacts close. One set of contacts sends an out-of-detent discrete to the LGC and a followup discrete to the AEA if the MODE CONTROL: PGNS switch is set to ATT HOLD.

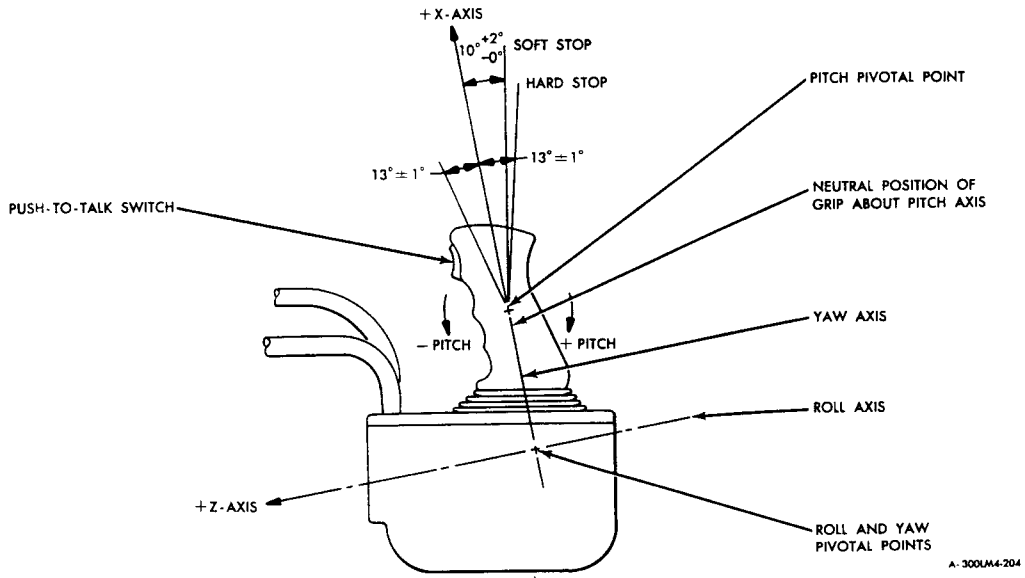

Figure 2.1-40. ACA - Angular Displacements

The other set of contacts sends a proportional secondary voltage to the LGC or the ATCA. The output gradient voltages are 0.28 volt/degree of displacement (1° to 11°). Positive rotation commands generate in-phase voltage; negative commands, 180° out-of-phase voltage.

During attitude control (ATTITUDE CONTROL: ROLL, PITCH, or YAW switch set to MODE CONT) when the minimum pulse mode is selected via the DSKY and the PGNS is in control, the LGC common applied to the plus and minus switches of the ACA is returned to the LGC when the ACA is displaced more than 2.5°. When the AGS is in control and the pulse mode is selected for a given axis (ATTITUDE CONTROL: ROLL, PITCH, or YAW switch set to PULSE), positive or negative d-c voltages are applied to the plus and minus switches of the ACA. When the ACA is displaced 2.5° or more from neutral, a positive or negative d-c voltage is applied to the ATCA. A positive voltage commands a positive acceleration (pulsed) about the selected axis; a negative voltage commands negative acceleration. With the ATTITUDE CONTROL: ROLL, PITCH, or YAW switch set to DIR, 28 volts dc is applied to two RCS secondary solenoids when the ACA is displaced more than 2.5°.

In any attitude control operation, if the ACA is moved 12° or more in any axis (hardover mode), the ACA activates four thrusters via the secondary coils. With either the MODE CONTROL: PGNS or AGS switch set to ATT HOLD and the ATTITUDE CONTROL: ROLL, PITCH, and YAW switches (one or more) set to MODE CONT, the ACA can command LM attitude changes about the selected axis or about as many as three axes simultaneously.

2.1.4.5.2 Thrust/Translation Controller Assemblies. (See figure 2.1-42.)

Either astronaut's TTCA can be used for manual control of LM translation in any axis, depending on the setting of the THROTTLE-JETS select lever. The THROTTLE position is selected for translation control, using the descent engine and the thrusters; JETS, for translation control, using only the thrusters.

A pair of detent switches and a pair of limit switches are located about each TTCA axis; a nonlinear potentiometer is located along the longitudinal axis. (See figure 2.1-43.) The detent switches

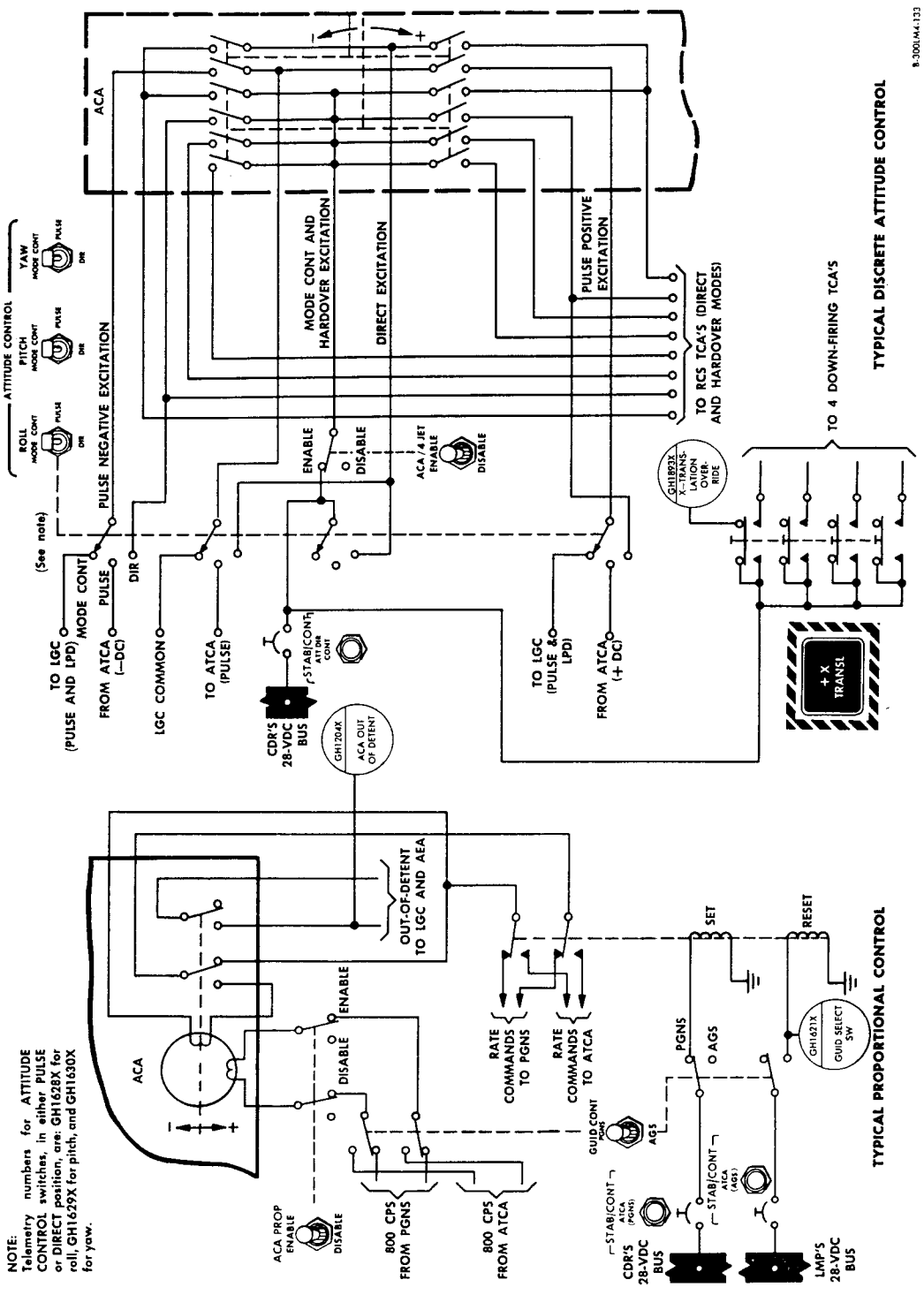

Figure 2.1-41. ACA - Functional Diagrams

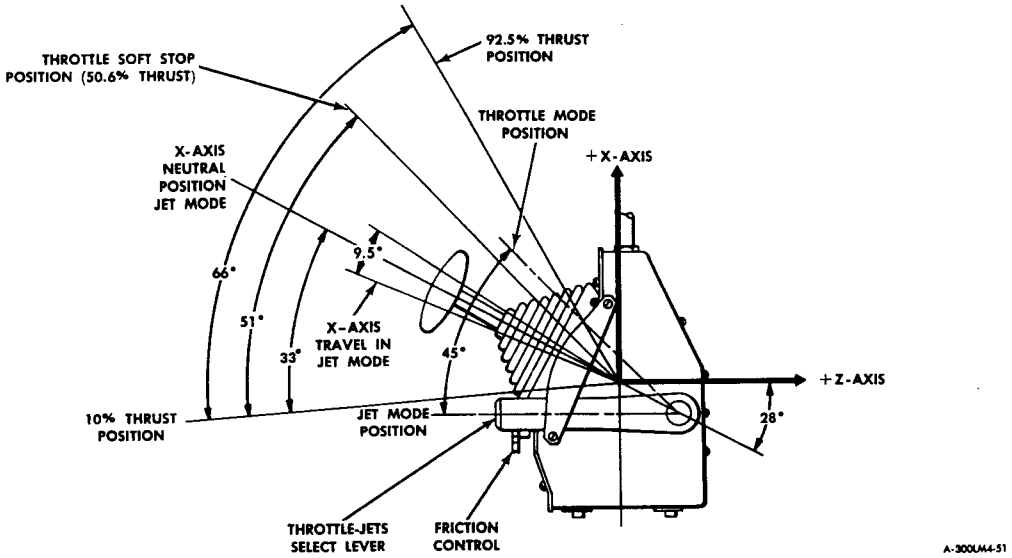

Figure 2.1-42. TTCA - Angular Displacements

provide a discrete to the LGC when the astronaut operates the TTCA 0.25 inch out of its detent (neutral) position. The discrete commands the LGC to issue translation change commands in accordance with the TTCA motion.

When the AGS is controlling the vehicle, the limit switches issue on and off translation commands directly to the RCS jet logic and driver circuitry. The nonlinear potentiometer provides an electrical output, which is proportional to TTCA displacement, when the THROTTLE-JETS select lever is set to THROTTLE. These signals are routed to the DECA to command proportional control of thrust (magnitude). The nonlinear characteristic provides increased servo characteristics.

2.1.4.5.3 Attitude and Translation Control Assembly. (See figure 2.1-44.)

The ATCA processes signals from the ACA, TTCA, RGA, and AEA in the AGS mode and from the LGC in the PGNS mode. The ATCA provides control of LM translation and rotation in all three axes, using the thrusters. Automatic and manual control are available in the primary guidance and abort guidance modes.

The ATCA performs the following functions in the primary guidance mode:

- Under automatic attitude hold control, conditions the thruster commands from the LGC
- Supplies regulated 800-cps, three-phase and single-phase power to the RGA, and reference 800-cps, single-phase power to the FDAI's, AGS, IS, and the RR backup servo transducers (manual mode)
- Supplies regulated d-c power to the DECA, ACA, TTCA, and S&C control assemblies and internal d-c power to the ATCA
- Accepts externally generated ground discretes at the primary jet drivers preamplifiers during the digital autopilot (DAP) mode

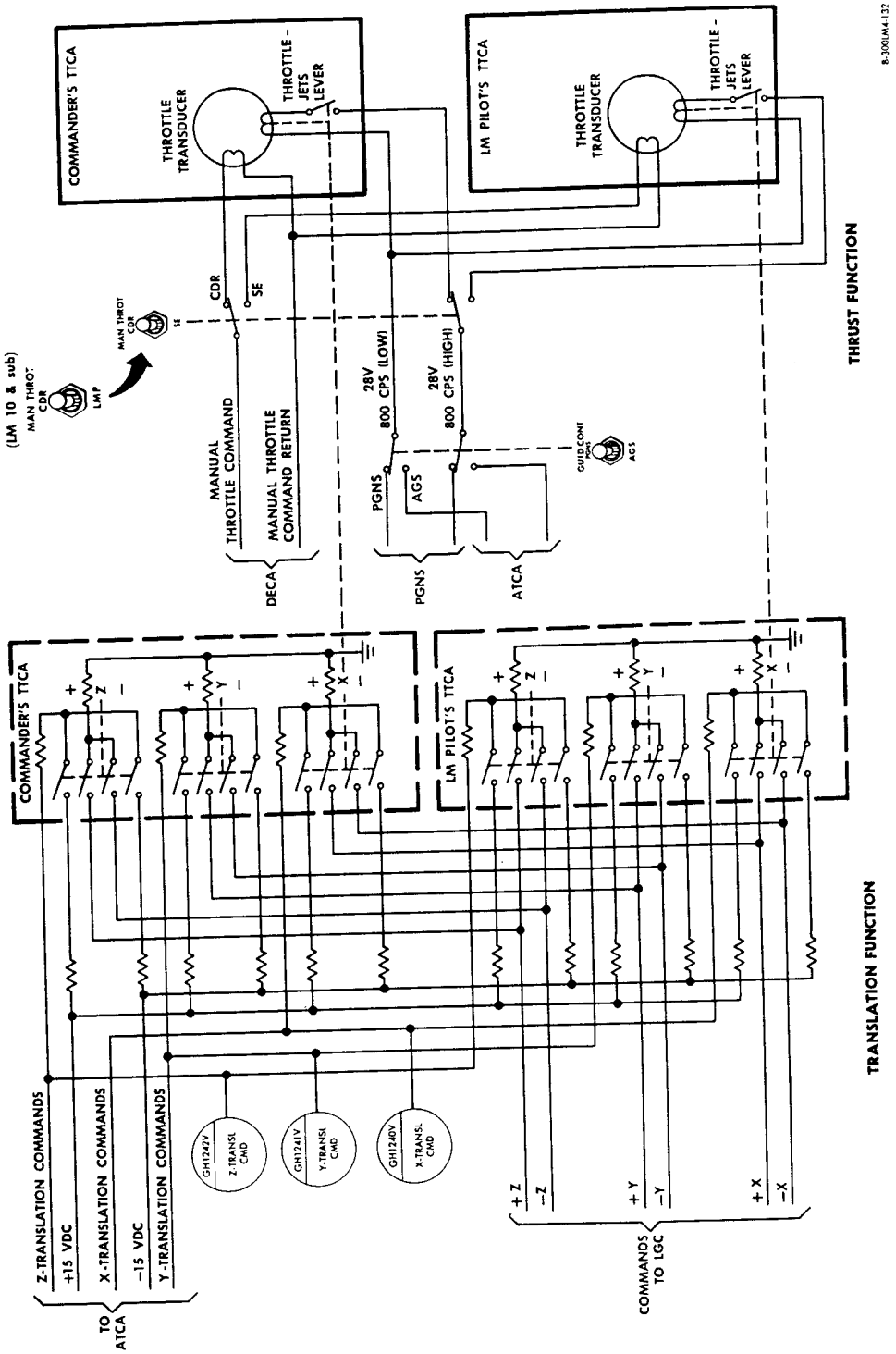

Figure 2.1-43. Thrust/Translation Controller Assembly - Functional Diagrams

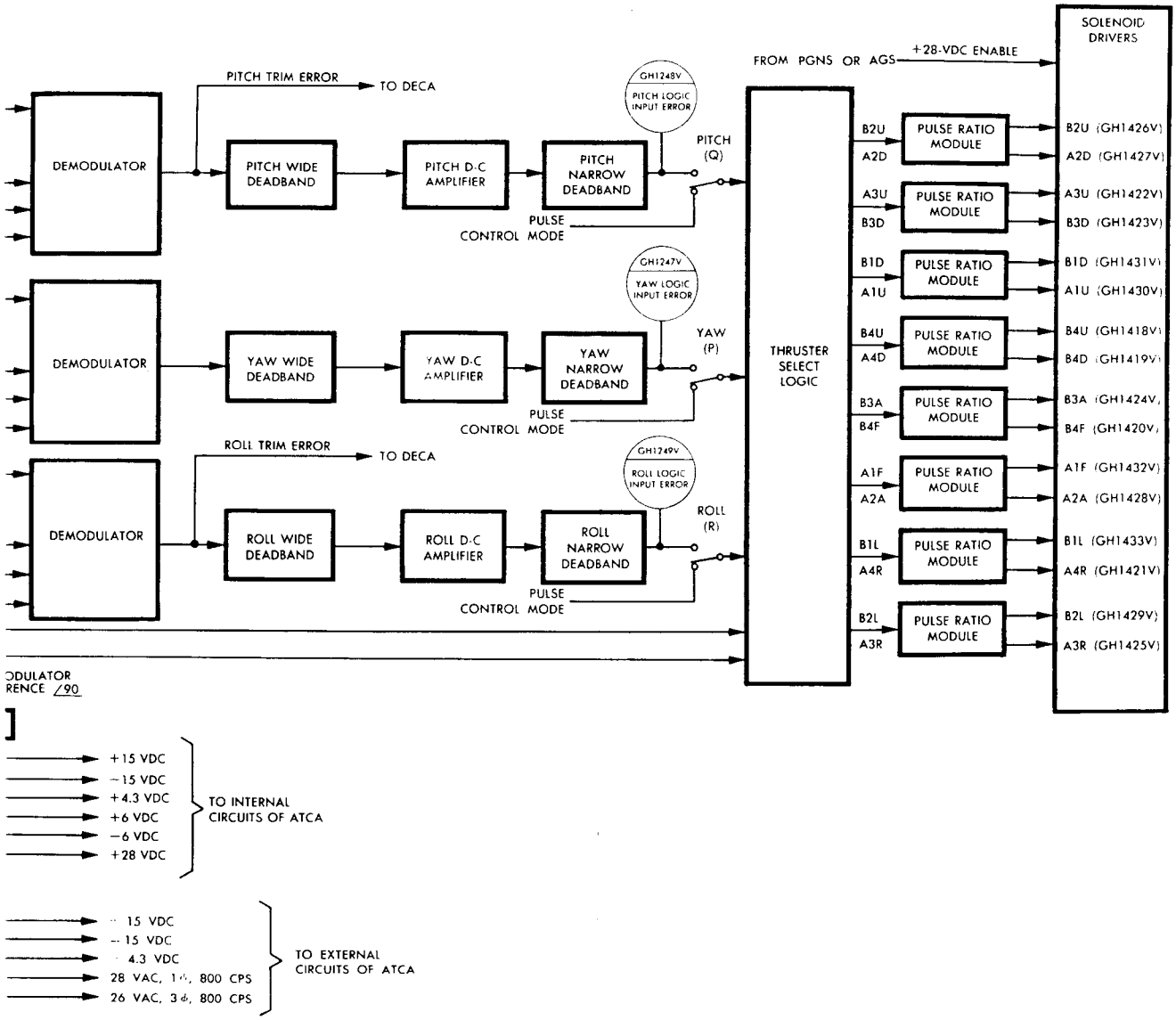

Figure 2.1-44. Attitude and Translation Control Assembly - Simplified Block Diagram (Attitude Hold and Auto Modes)

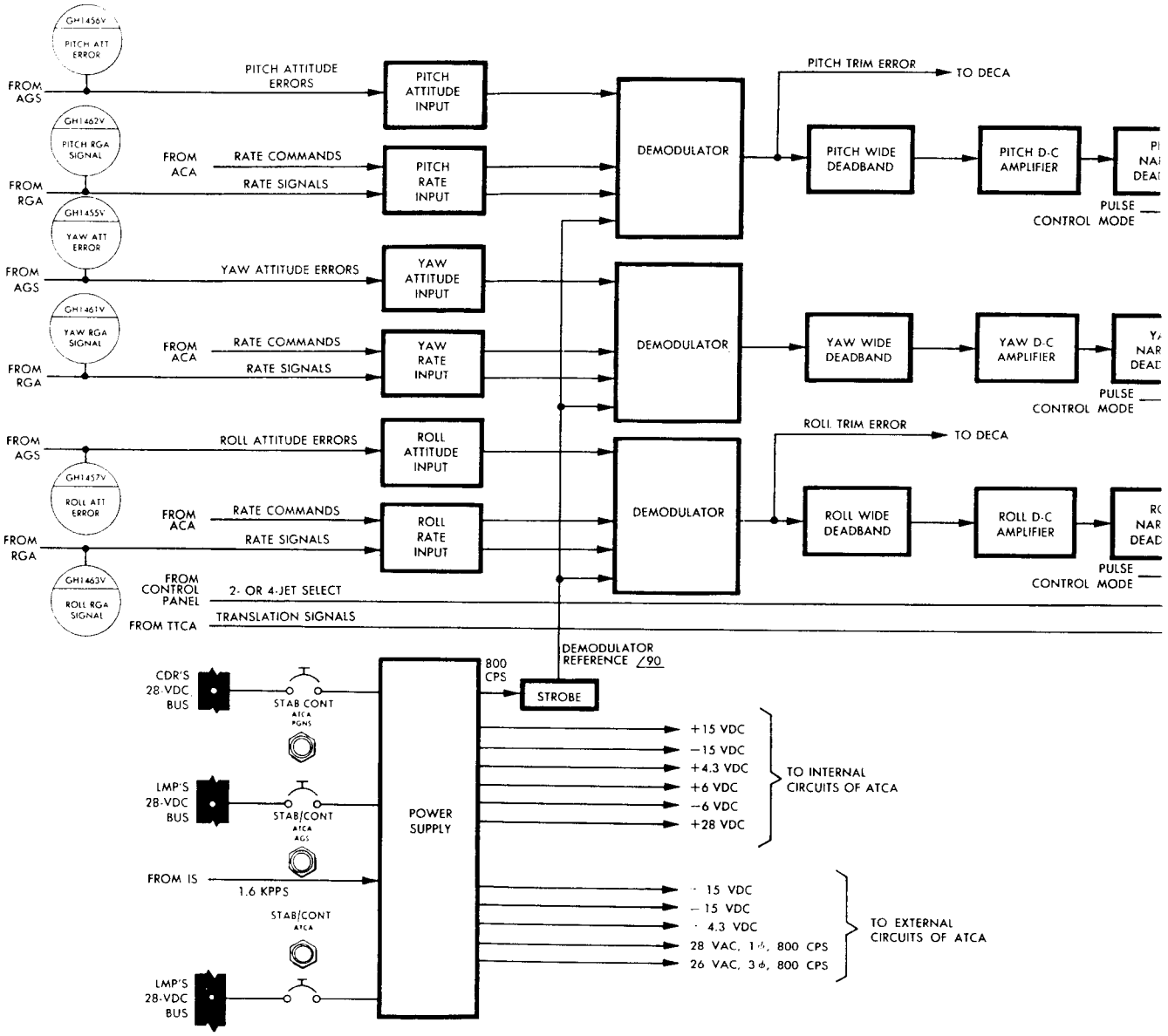

Figure 2.1-44. Attitude and Transl
(Attitud

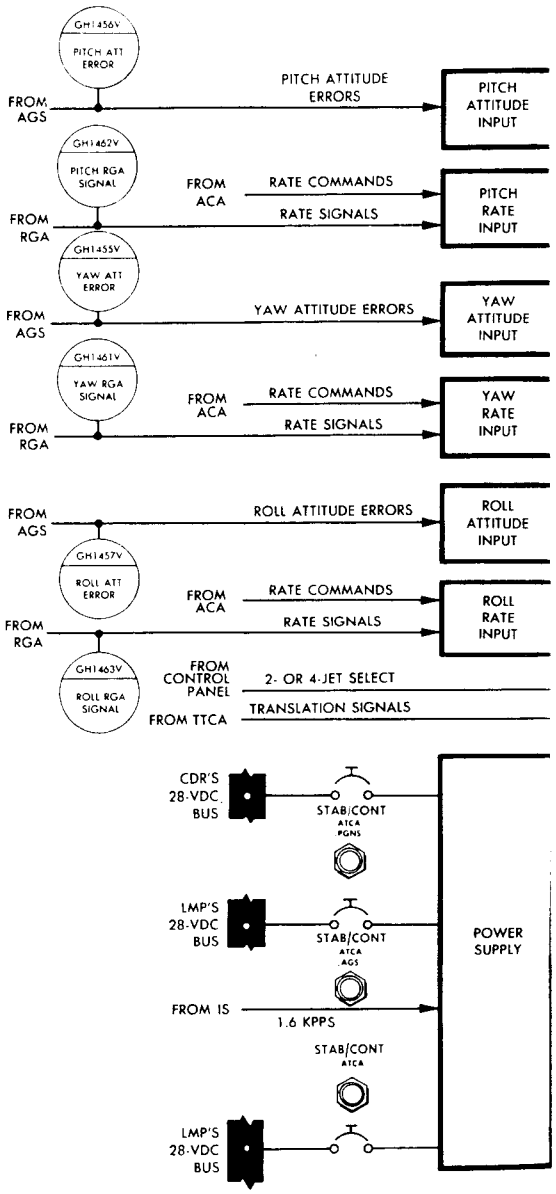
GH1456V
PITCH ATT ERROR
FROM AGS
PITCH ATTITUDE ERRORS
PITCH ATTITUDE INPUT
GH1462V
PITCH RGA SIGNAL
FROM ACA
RATE COMMANDS
FROM RGA
RATE SIGNALS
PITCH RATE INPUT
GH1455V
YAW ATT ERROR
FROM AGS
YAW ATTITUDE ERRORS
YAW ATTITUDE INPUT
GH1461V
YAW RGA SIGNAL
FROM ACA
RATE COMMANDS
FROM RGA
RATE SIGNALS
YAW RATE INPUT
FROM AGS
ROLL ATTITUDE ERRORS
ROLL ATTITUDE INPUT
GH1457V
ROLL ATT ERROR
FROM ACA
RATE COMMANDS
FROM RGA
RATE SIGNALS
ROLL RATE INPUT
GH1463V
ROLL RGA SIGNAL
FROM CONTROL PANEL
2- OR 4-JET SELECT
FROM TTCA
TRANSLATION SIGNALS
CDR'S 28-VDC BUS
STAB/CONT
ATCA
PGNS
LMP'S 28-VDC BUS
STAB/CONT
ATCA
AGS
FROM IS
1.6 KPPS
STAB/CONT
ATCA
LMP'S 28-VDC BUS
POWER SUPPLY

GN&

The ATCA performs the following functions in the abort guidance mode:

- Accepts 800-cps attitude error signals, rate command signals, and rate gyro signals for the purpose of generating on and off thruster commands
- Sums, amplifies, limits, demodulates, and deadband attitude and rate (command and gyros) signals to produce vehicle rotation commands.
- Determines, by combination of rotation and translation commands in the logic circuitry, the appropriate pulse ratio modulators and jet solenoids to be energized. Proper thruster selection provides the desired rotation and translation.
- Accepts external open-loop, low-level rotation commands directly at the logic networks (pulse mode)
- Provides trim signals to the DECA
- Provides d-c voltages to the ACA, TTCA, DECA, and the control panel, and internal d-c voltages to the ATCA
- Provides synchronized 800-cps, three-phase power to the RGA and 800-cps single-phase power to the ACA, TTCA, RGA, AGS, FDAI's, IS (during manual mode only), and RR backup servo transducers
- Accepts and processes mode-changing external signals to effect changes in rate gain due to changes in vehicle inertial (during APS or DPS operations), a change in deadbands (manually set), and a change in two-jet - four-jet rotation commands, but dependent upon engine propulsion modes.

In the primary guidance mode, only the primary preamplifiers are enabled by the GUID CONT switch. The circuits in the ATCA remain fully active when used with PGNS, but automatic manual steering and translation commands from the jet selection logic are inhibited. Regulated d-c power and the synchronized 800-cps power are still supplied from the ATCA. In this functional mode, the ATCA electronically switches the thruster command ground discretes from the LGC to provide driving power for RCS jet solenoid actuation and provides vehicle rotation rates to the FDAI's. In the abort guidance mode, only the abort preamplifiers are enabled and thruster signals from the pulse ratio modulators are switched to drive the RCS primary solenoids. The BAL CPL switch (panel 1) must be set to ON to enable all 16 abort preamplifiers. If the BAL CPL switch is set to OFF, the four abort preamplifiers that control the upward-firing thrusters (A1U, B2U, A3U, and B4U) are disabled, if necessary, to optimize conditions during ascent engine firing.

In the abort guidance mode, pitch, roll, and yaw signals are processed in three similar channels. Attitude error signals from the AGS are applied to the ATCA in the automatic mode and the attitude hold mode with the ACA's in detent. When the DEAD BAND switch (panel 3) is set to MIN (narrow deadband), the error signals are first passed through limiters to prevent excessive vehicle rates. The limiters maintain the vehicle rates at a maximum of 10°/sec in pitch and 5°/sec in roll and yaw during descent or ascent phases. When the DEAD BAND switch is set to MAX (wide deadband), the limiter is eliminated. The error signals are next summed with rate-damping signals from the RGA. In the attitude hold mode, with an ACA out of detent, proportional attitude-rate commands are summed with the RGA rate-damping signals. The gains of the summing amplifiers are changed when the LM is staged, to account for the change in vehicle moment of inertia. The summed a-c signals are changed to dc by keyed demodulators and filters. In the roll and pitch channels, the demodulator output is routed to the DECA to control descent engine trim. The deadband circuitry provides for a wide deadband (-5° to +5°) or a narrow deadband (-0.3° to +0.3° roll and pitch; 0.4° to +0.4° yaw). If the ascent or descent engine is turned on, the narrow deadband is automatically selected. When the engines are turned off, the deadband depends upon the setting of the DEAD BAND switch.

In the automatic and attitude hold modes, the attitude error signals from the deadband circuits are routed to the logic summing amplifiers, which drive the proper pulse ratio modulator (PRM) and reaction jet driver. In the pulse mode, d-c voltages from the ACA's are directly routed to the logic summing amplifiers. Using one summing amplifier to drive one thruster or the other in the eight opposing pairs, depending on the polarity of the ACA output, eliminates the possibility of wasting fuel by simultaneously firing opposing thrusters. Roll, pitch, and X-axis translation are controlled by the vertical

thrusters; yaw, Y-axis translation, and Z-axis translation, by the horizontal thrusters. The eight summing amplifiers combine the attitude signals and translation commands from the TTCA and apply the resultant signals to eight PRM's. Logic circuitry determines whether two or four thrusters (jets) fire for X-axis translation, pitch, and roll, as well as, the net number of jets activated by combination signals. Also, manual operation of two or four jets in X-translation and pitch or roll on a single-axis basis is possible, using ATCA.

The eight PRM's generate pulses, whose width and frequency vary according to the input voltage, to control the duty cycle of the thrusters. The pulse output of each PRM is fed to a pair of solenoid driver preamplifiers and jet drivers. Each pulse from the PRM fires one of a pair of opposing thrusters, depending on the polarity of the input voltages to the PRM. When the pulse is applied, the jet drivers, which act as solid-state switches, supply a ground path to the solenoid coil of the thruster. This action completes an electrical path for the solenoid coil, and the thruster fires for the duration of the PRM pulse.

The ATCA consists of an attitude error signal conditioner-limiter, rate signal summation amplifier demodulator-filter network, deadband circuits, jet select logic, pulse ratio modulators, and solenoid driver preamplifiers and jet solenoid drivers. (See figure 2.1-45.)

Attitude Error Signal Conditioner-Limiter. To provide the proper scale factor, impedance match, and limiting, the 800-cps attitude error signal is passed through a signal conditioner-limiter before summation with the rate gyro signal. Limiting the attitude error prevents command of excessive vehicle rates during narrow deadband operation only subject to ascent or descent conditions. The limiting action of the limiter is eliminated during wide deadband operation.

Rate Signal Summation Amplifier. The attitude error and rate and ACA signals are a-c summed and amplified before demodulation by the amplifier, because they are all synchronized to the 800-cps power source. Amplification and summing at this point helps to minimize error caused by drift.

Demodulator-Filter Network. A keyed demodulator is used to convert summed and amplified error signals to dc. The synchronized 800-cps power source of the ATCA is used for the demodulator reference. An active filter is used to obtain 12-db/octave attenuation for frequencies above 18 cps. The filtered roll and pitch signals are routed to the DECA for descent engine trim.

Deadband Circuits. Either of two deadband circuits can be selected manually with the DEAD BAND switch. The wide deadband (DEAD BAND switch set to MAX) is used for coasting-period limit cycling to conserve fuel. The narrow deadband (DEAD BAND switch set to MIN) is used during periods when the ascent or descent engine is thrusting. In addition to the manual capability, an automatic minimum deadband override is provided for use during ascent or descent engine thrusting.

Jet Select Logic. (See figure 2.1-46.) For any combination of analog rotation and translation signal inputs to the ATCA, this logic provides signals to the proper thrusters (tables 2.1-16 and 2.1-17). Maximum moment control of four jets for combinational commands occurs whenever they are commanded. When the ascent or descent engine is thrusting, the ascent engine latching device of an S&C control assembly automatically puts the logic in four-thruster roll and pitch operation. In four-thruster operation, the logic corrects roll or pitch errors with four thrusters. This provides additional attitude gain to compensate for possible engine thrust-vector misalignment. The X TRANSL switch (panel 1) enables the astronauts to command four-thruster X-axis translation to provide additional thrust capability along the vehicle X-axis.

Pulse Ratio Modulators. The PRM's accept the net output signal + or - of the logic network d-c summing amplifiers. The eight PRM's consists of a zero crossover detector, an absolute value circuit, output gating, and the PRM circuit. The PRM's accept d-c analog signals from the thruster selection logic, detect the polarity, and route the pulsed output to the proper jet driver. The zero crossover detector detects the polarity of the d-c input, and provides enabling signals to the appropriate gates when the input signals exceed the threshold level (0.5 volt). In this manner simultaneous thrusting of opposing jets is prevented. Because the PRM circuit operates on positive inputs only, the absolute value circuit is required, to invert negative inputs and pass positive inputs to the PRM. The outputs of the zero crossover detector and the PRM circuit, applied to AND gates, produce a train of pulses at the output of the PRM when the two inputs are coincident.

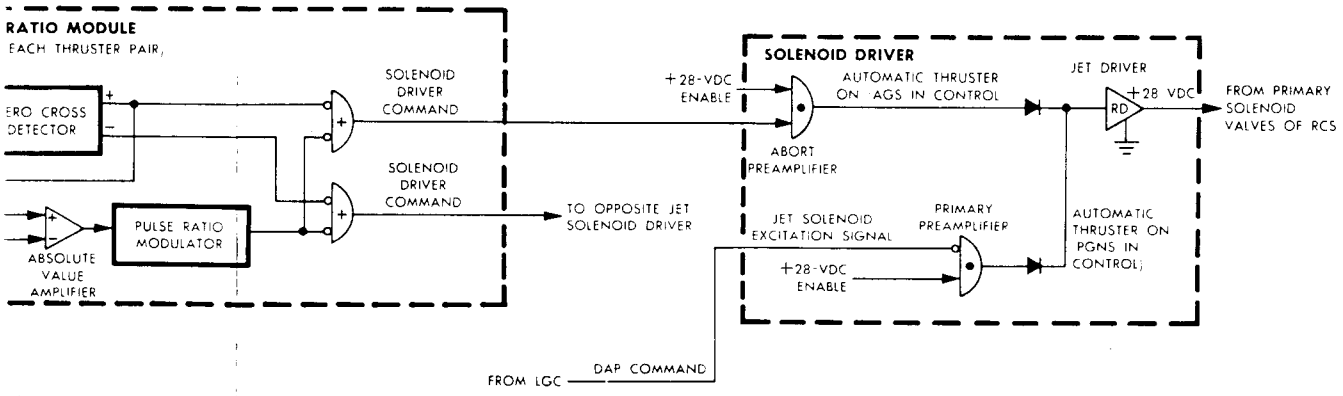

Note.
Only the pitch error channel is shown.
The roll and yaw error channels are similar to the pitch channel

Figure 2.1-45. Attitude and Translation Control Assembly - Detailed Block Diagram

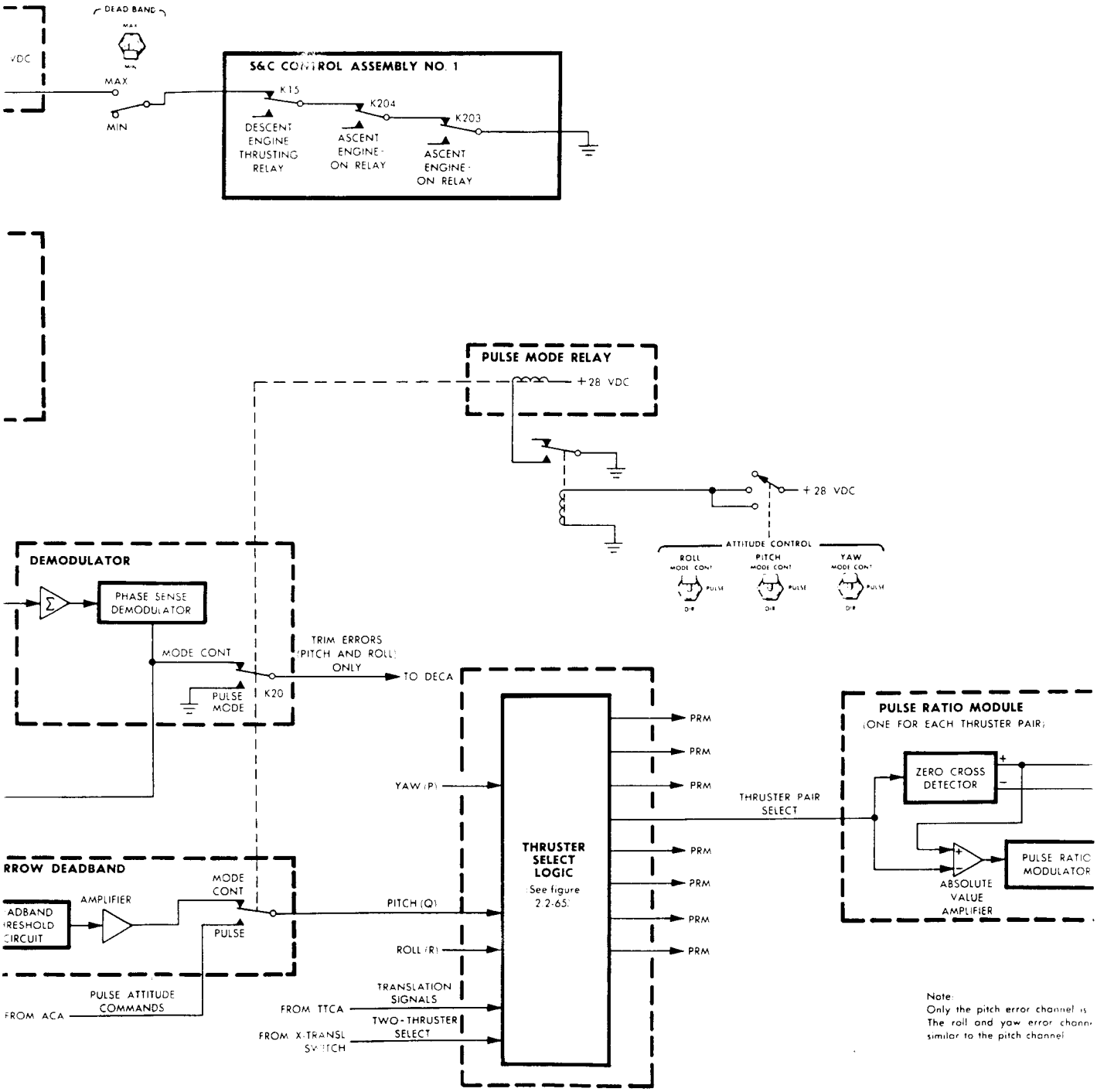
DEAD BAND
MAX
MIN
VDC
MAX
MIN
S&C CONTROL ASSEMBLY NO. 1
K15
K204
K203
DESCENT ENGINE THRUSTING RELAY
ASCENT ENGINE-ON RELAY
ASCENT ENGINE-ON RELAY
PULSE MODE RELAY
+28 VDC
+28 VDC
ATTITUDE CONTROL
ROLL
PITCH
YAW
MODE CONT
PULSE
OFF
DEMODULATOR
PHASE SENSE DEMODULATOR
MODE CONT
TRIM ERRORS (PITCH AND ROLL) ONLY
TO DECA
PULSE MODE
K20
RROW DEADBAND
ADBAND RESHOLD CIRCUIT
AMPLIFIER
MODE CONT
PULSE
PULSE ATTITUDE COMMANDS
FROM ACA
YAW (P)
PITCH (Q)
ROLL (R)
TRANSLATION SIGNALS
FROM TTCA
TWO-THRUSTER SELECT
FROM X-TRANSL SWITCH
THRUSTER SELECT LOGIC
(See figure 2.2-65)
PRM
THRUSTER PAIR SELECT
PULSE RATIO MODULE
(ONE FOR EACH THRUSTER PAIR)
ZERO CROSS DETECTOR
ABSOLUTE VALUE AMPLIFIER
PULSE RATIO MODULATOR
Note:
Only the pitch error channel is
The roll and yaw error chann
similar to the pitch channel

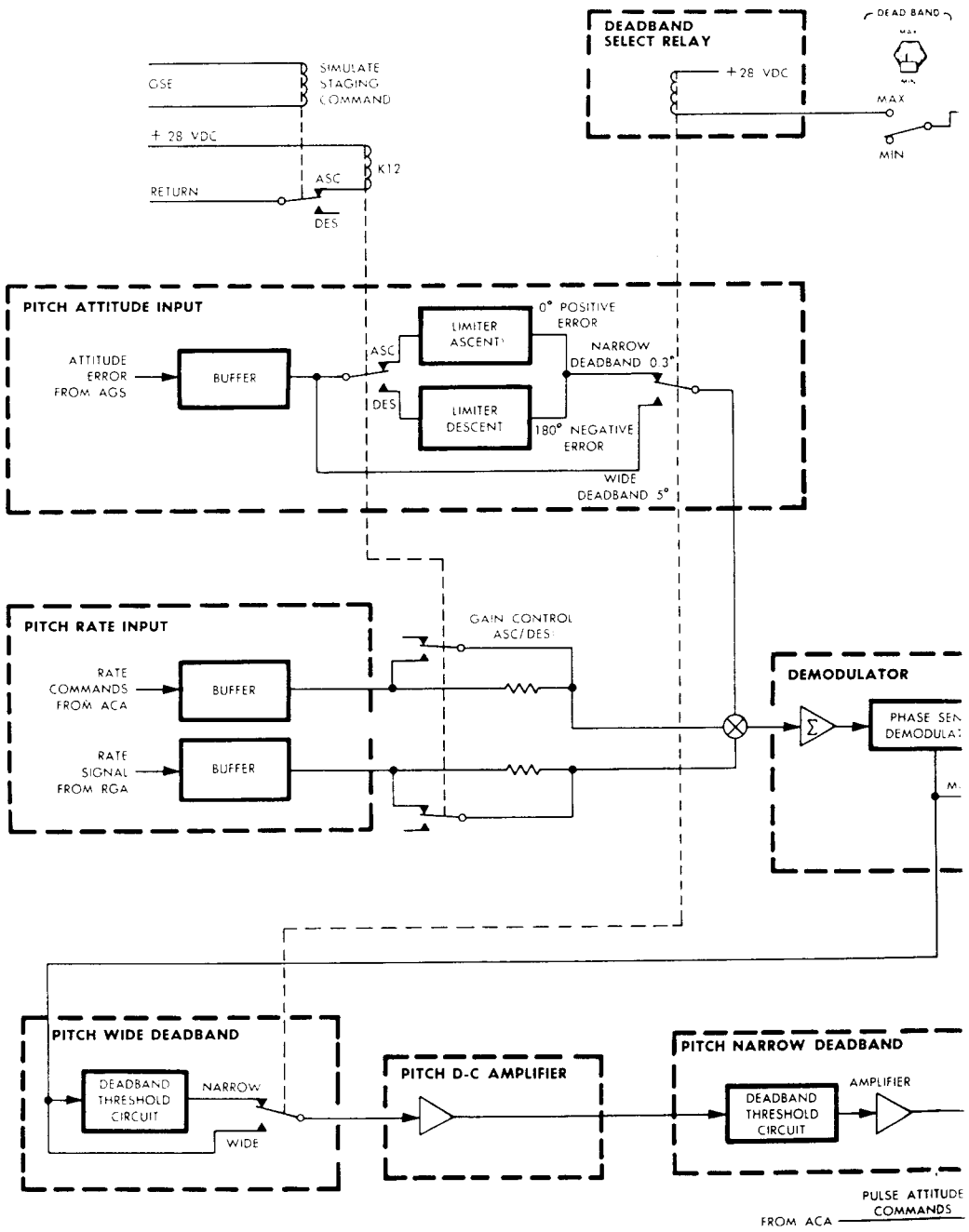
DEADBAND SELECT RELAY
+28 VDC
DEAD BAND
MAX
MIN
GSE
SIMULATE STAGING COMMAND
+28 VDC
K12
RETURN
ASC
DES
PITCH ATTITUDE INPUT
ATTITUDE ERROR FROM AGS
BUFFER
ASC
DES
LIMITER ASCENT
LIMITER DESCENT
0° POSITIVE ERROR
NARROW DEADBAND 0.3°
180° NEGATIVE ERROR
WIDE DEADBAND 5°
PITCH RATE INPUT
RATE COMMANDS FROM ACA
RATE SIGNAL FROM RGA
BUFFER
BUFFER
GAIN CONTROL ASC/DES
DEMODULATOR
PITCH WIDE DEADBAND
DEADBAND THRESHOLD CIRCUIT
NARROW
WIDE
PITCH D-C AMPLIFIER
PITCH NARROW DEADBAND
DEADBAND THRESHOLD CIRCUIT
AMPLIFIER
PULSE ATTITUDE COMMANDS
FROM ACA

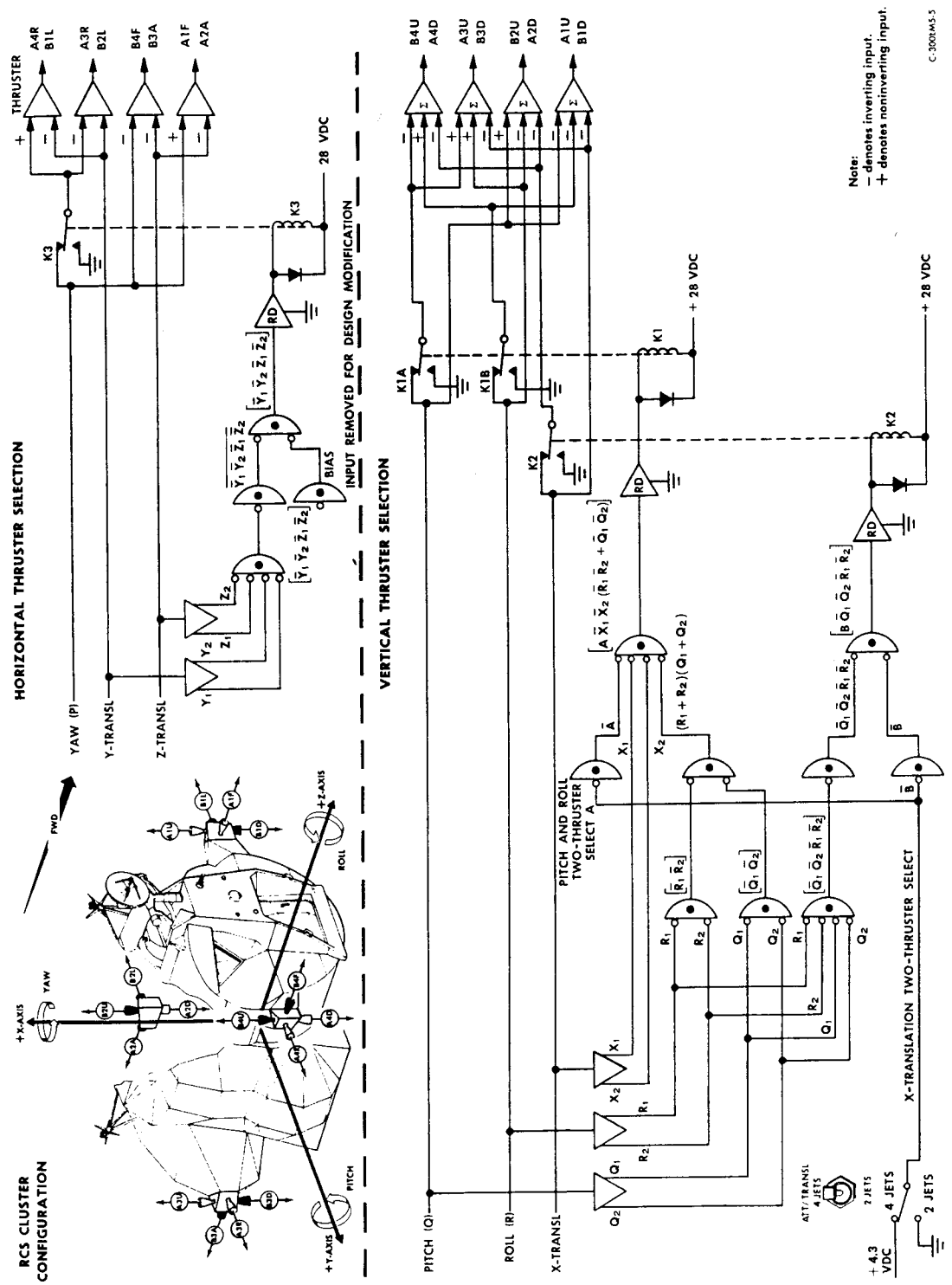

Figure 2.1-46. ATCA - Jet Select Logic

Table 2.1-16. RCS Jet Select Logic - Rotational Maneuver

Maneuver	B4U	A4D	B4F	A4R	A3U	B3D	B3A	A3R	B2U	A2D	A2A	B2L	A1U	B1D	A1F	B1L
+P (Yaw left), four-jet				X			X					X			X	
two-jet	Alternating pulses between A4R, B2L & A1F, B3A															
-P (Yaw right), four-jet			X					X			X					X
two-jet	Alternating pulses between B4F, A2A & B1L, A3R															
+P (Alternative)*, two-jet							X								X	
				X								X				
				X			X									
							X					X				
												X			X	
				X											X	
-P (Alternative)*, two-jet								X								X
			X								X					
								X			X					
											X					X
			X													X
			X					X								
+U (Pitch up, roll right)**, two-jet					X									X		
-U (Pitch down, roll left)*, two-jet						X							X			
+V (Pitch down, roll right)**, two-jet	X									X						
-V (Pitch up, roll left)**, two-jet		X							X							

*Alternative two-jet policies when a P rotational jet fails.
**If one U or V rotational jet fails, the other jet completes rotation.

Solenoid Driver Preamplifiers and Jet Solenoid Drivers. Thirty-two solenoid driver preamplifiers accept pulsed inputs from the 16 PRM outputs when the AGS is used or from the 16 PGNS outputs when the primary guidance mode is used. When the AGS is used, its 16 preamplifiers are enabled with 28-volt d-c power and the PGNS preamplifiers are disabled, and vice versa. The jet solenoid drivers, driven by either one set of preamplifiers or the other, control the firing of their respective thrusters by providing a ground to the fuel and oxidizer solenoids through output transistors. When the AGS is selected and the main engine (ascent or descent) is firing, X-axis rotation logic inputs cause one or two of the vertical thrusters to fire and oppose the engine thrust. To prevent this from occurring, the BAL CPL switch can be used to disable four of the preamplifiers. Setting the X-TRANSL switch to 4 JETS and the BAL CPL switch to OFF provides two-thruster roll and pitch error corrections without opposing the engine thrust.

2.1.4.5.4 Rate Gyro Assembly. (See figure 2.1-47.)

The RGA senses pitch, roll, and yaw rates and applies the 800-cps rate signals to the ATCA. The ATCA uses the 800-cps rate signals to rate-damp the attitude control loop when the AGS is in control. Rate signals are displayed on the FDAI from monitor points at the ATCA inputs.

The RGA consists of three single-degree-of-freedom rate gyros mounted so that they sense vehicle roll, pitch, and yaw rates. Each gyro can measure input rates from -25° to +25° per second; each has self-test features. Each rate gyro senses a rate of turn about its input axis, which is perpendicular to the spin and output axes. This rate of turn is dependent on the gimbal position of the gyro. An analog output (rate of turn) is obtained from the stator-rotor pickoff, which is positioned by the precession of the gimbal. The pickoff voltages are continuously fed to the FDAI rate indicators and the ATCA. In abort guidance, these rate signals are effective in damping vehicle rates.

Three-phase, 26-volt, 800-cps power generated in the ATCA is applied to the motor of each gyro. Pickoff excitation (28-volt, 800-cps power generated in the ATCA) is applied to the primary coil

Table 2.1-17. RCS Jet Select Logic - Translational Maneuver

Maneuver	B4U	A4D	B4F	A4R	A3U	B3D	B3A	A3R	B2U	A2D	A2A	B2L	A1U	B1D	A1F	B1L
+X-Translation, four-jet		X				X				X				X		
two-jet		X								X						
						X								X		
-X-Translation, four-jet	X				X				X				X			
two-jet					X								X			
	X								X							
+Y-Translation												X				X
-Y-Translation				X				X								
+Z-Translation							X				X					
-Z-Translation			X												X	
+U (+Z & +Y) Translation							X				X	X				X
-U (-Z & -Y) Translation			X	X				X							X	
+V (+Z & -Y) Translation				X			X	X			X					
-V (-Z & +Y) Translation			X									X			X	X
+Y-Tack Translation*	Alternating pulses between B2L, B4F & A2A, B2L Alternating pulses between B1L, A1F & B1L, B3A															
-Y-Tack Translation*	Alternating pulses between A4R, B4F & A4R, A2A Alternating pulses between A3R, B3A & A3R, A1F															
+Z-Tack Translation*	Alternating pulses between B3A, A3R & B3A, B1L Alternating pulses between A2A, B2L & A2A, A4R															
-Z-Tack Translation*	Alternating pulses between B4F, A4R & B4F, B2L Alternating pulses between A1F, A3R & A1F, B1L															

*Y- and Z-track translations are commanded when conventional Y or Z two-jet translations are not available (jet failure). Tacking alternations are performed every 0.1 second.

of a microsyn pickoff. The secondary coil picks off an 800-cps voltage proportional to the precession of the gyro and, hence, proportional to the LM rate about the gyro input axis (0.140 vrms/deg/sec). Polarity is arranged so that an in-phase pickoff voltage indicates a positive rate; a 180° phase pickoff voltage, a negative rate.

The self-test capability consists of a spin motor rotation test and a self-test torquer (gimbal torquer). The self-test torquer applies torque to the movable gimbal. When 28 volts dc is applied to windings L1 and L2, the secondary of transformer T1 should pick off a voltage equivalent to a 5°/sec rotation. The direction of torquing is reversed by changing the polarity of the d-c voltage.

2.1.4.5.5 Descent Engine Control Assembly. (See figure 2.1-48.)

The DECA processes four descent-engine-controlling outputs, as follows:

- Engine-throttling commands from the astronauts (manual) and the PGNS (automatic)
- PGNS or ATCA signals to position the GDA's to control engine trim

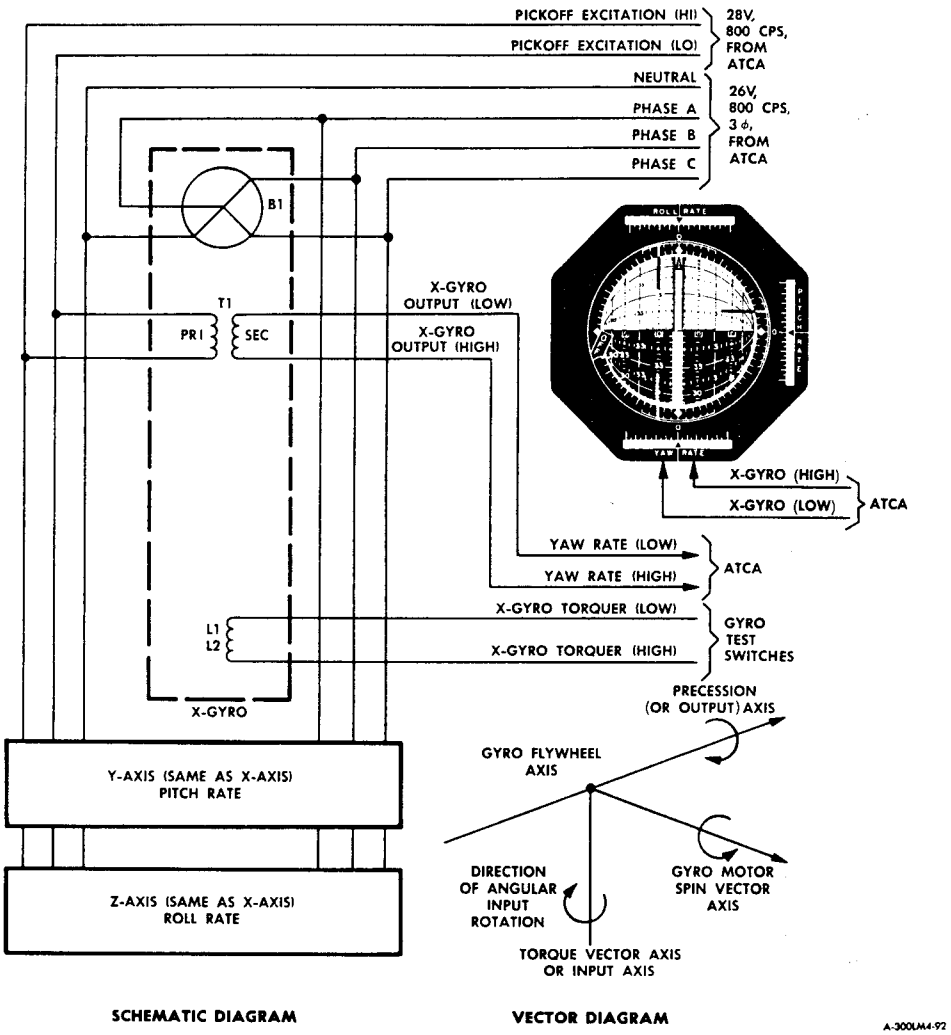

Figure 2.1-47. Rate Gyro Assembly - Schematic and Vector Diagram

- Engine arm commands to actuate the fuel and oxidizer isolation valves in the descent engine
- On and off commands to control descent engine ignition and shutdown (figure 2.1-51)
- Issues GDA operation and DC supply failure notification to IS

To initiate manual throttle commands only, the THR CONT switch (panel 1) must be set to MAN. (See figure 2.1-49.) During manual throttle control, LGC throttle commands are interrupted and

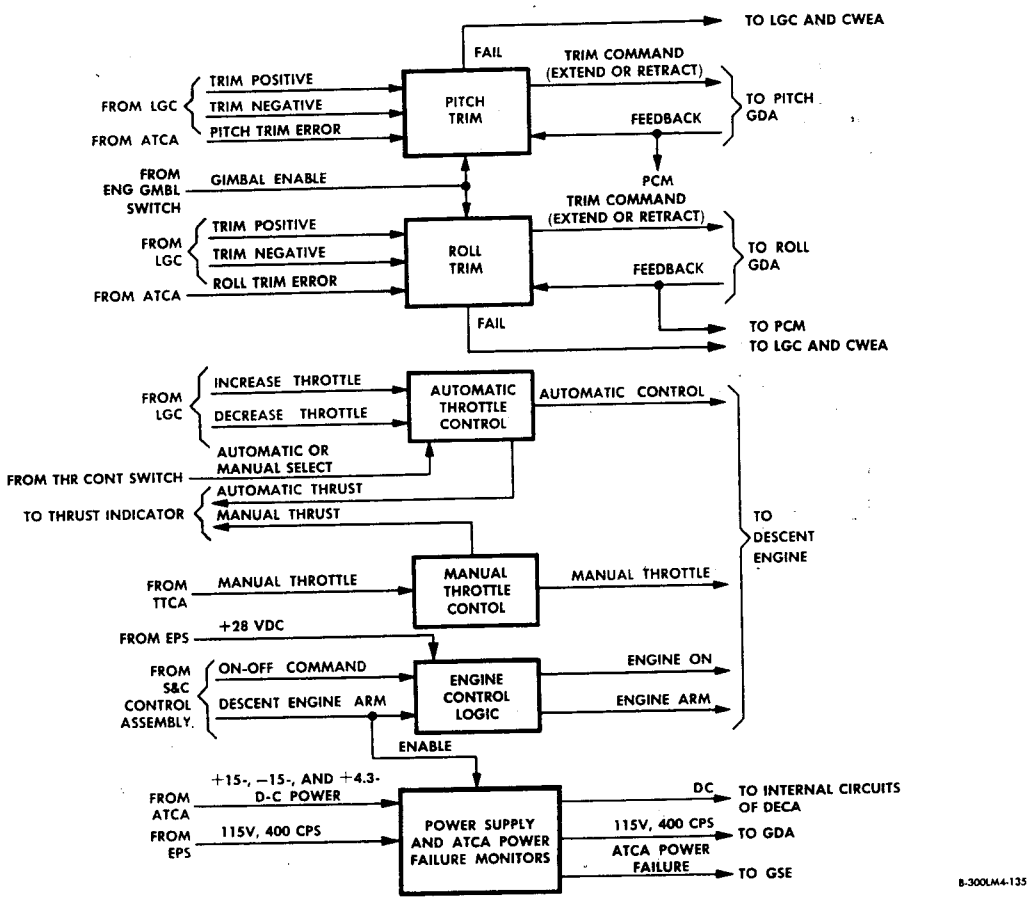

Figure 2.1-48. Descent Engine Control Assembly - Simplified Block Diagram

only manual commands are displayed on the THRUST indicator. Manual throttle commands consist of a-c voltages, proportional to the active TTCA X-axis displacement, which are applied to the DECA. The active TTCA always provides at least a 10% command. These commands drive a nonlinear circuit that provides the desired thrust level. With nonlinear thrust levels, more resolution is obtained at the lower levels. (See figure 2.1-52.) Once the nonlinear region of the TTCA is reached, the TTCA should be displaced to its hard stop to prevent erratic descent engine operation.

To apply automatic throttle commands to the descent engine, the THR CONT switch must be set to AUTO. The automatic commands appear on two separate lines (throttle increase and throttle decrease) as 3,200-cps pulse inputs to an integrating d-c counter (up-down counter). Each pulse corresponds to a 2.7-pound thrust increment. Throttle increases can drive the counter up to 12 volts, which, when combined with the TTCA fixed 10% output in the descent engine throttle servoamplifier, corresponds to 92.5% thrust. During automatic throttle operation, the LGC-commanded thrust is summed with the

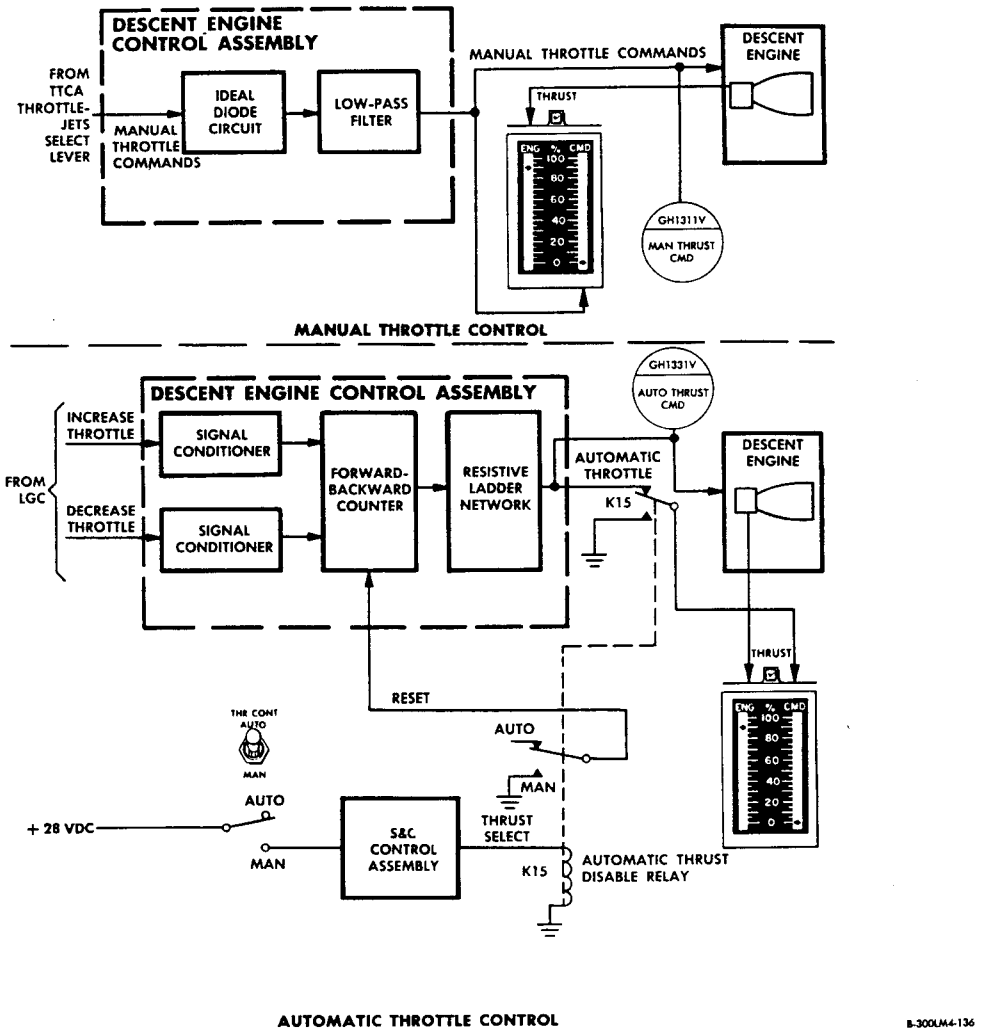

Figure 2.1-49. Descent Engine Control Assembly - Throttle Control Diagram

output of the TTCA. When the TTCA is in its minimum position, the LGC-commanded thrust is summed with the fixed 10% output of the TTCA. When an active TTCA is displaced from its minimum position, the amount of manual thrust commanded is summed with the LGC-commanded thrust to produce the desired resultant. In this case, the TTCA overrides LGC control of descent engine thrust. The total thrust commanded (automatic and/or manual) cannot exceed 92.5%. Automatic thrust commands desired by the LGC are always 10% of thrust lower than required to compensate for the TTCA fixed output.

In the primary guidance mode, the LGC provides automatic trim control (see figure 2.1-50). When the LGC determines the required descent engine trim it provides a train command to the DECA, on

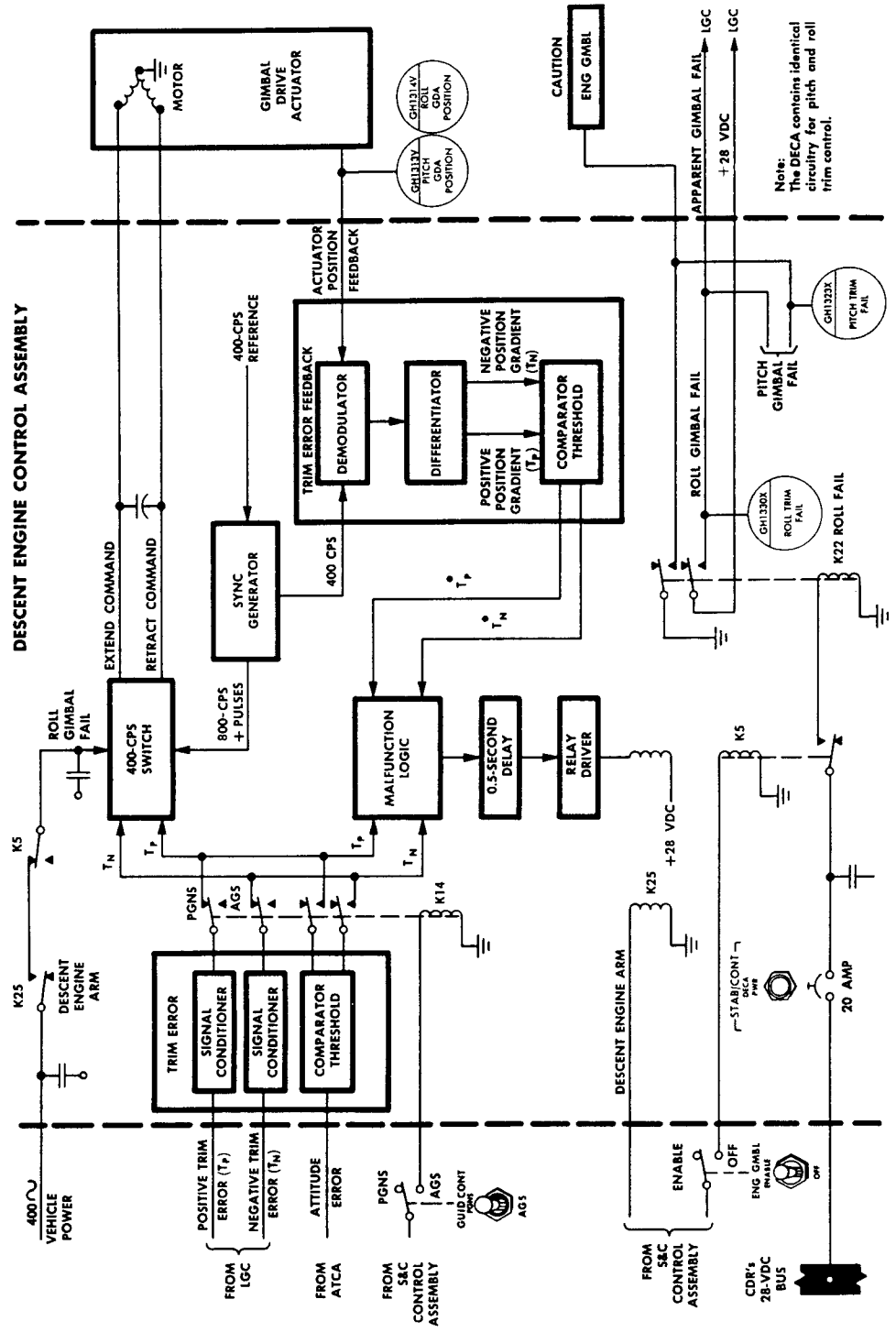

Figure 2.1-50. Descent Engine Control Assembly - Trim Control Diagram

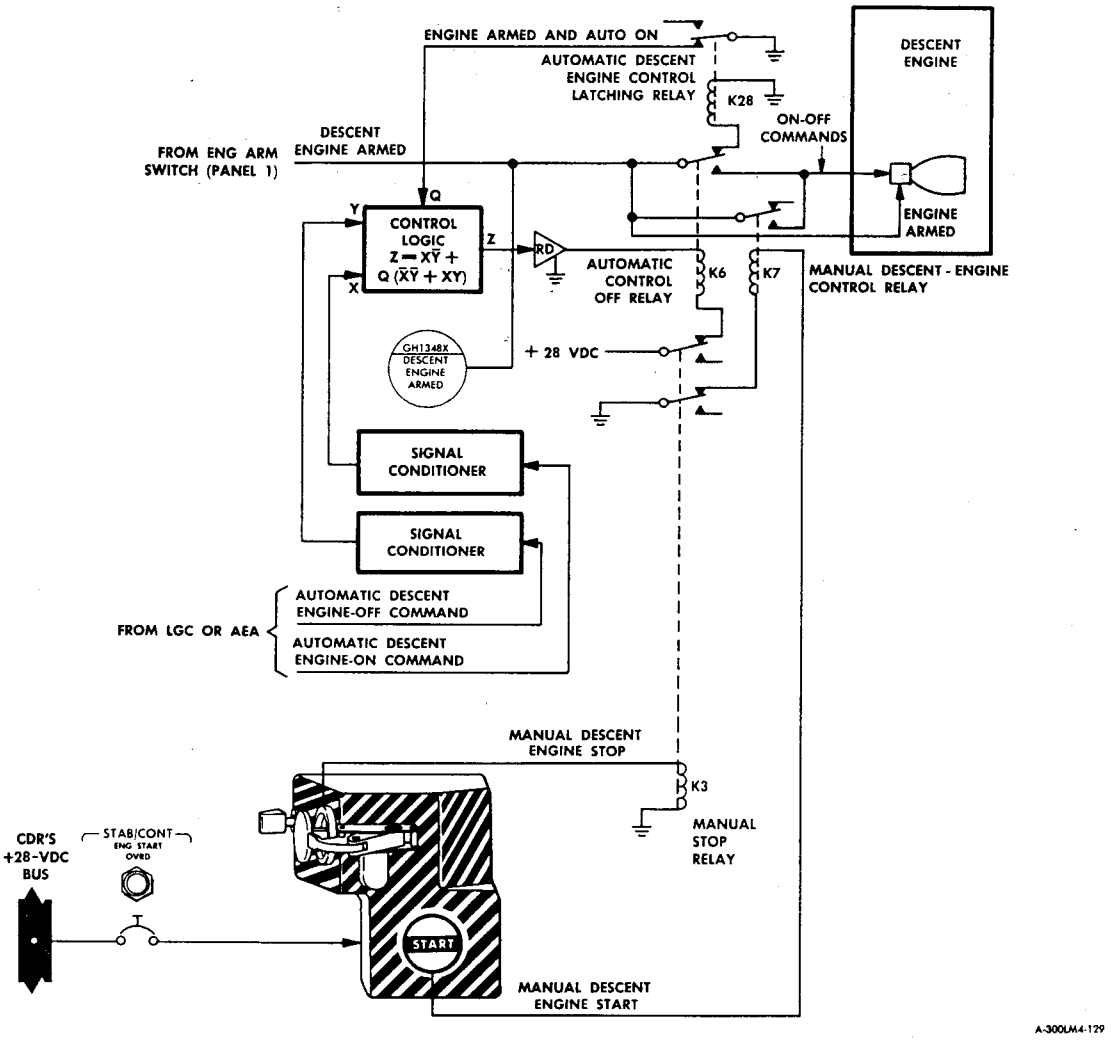

Figure 2.1-51. Descent Engine Control Assembly - Engine Control Diagram

a positive trim line or a negative trim line for the roll or pitch axis. The trim command is routed by a malfunction logic circuit and to a power-switching circuit, which applies 115-volt, 400-cps power to the proper GDA. The power-switching circuit is controlled by the malfunction logic. The GDA tilts the descent engine and provides a 400-cps feedback signal (proportional to engine position) to the DECA. The DECA demodulates and differentiates the feedback signal; the resultant signal is fed back to the malfunction logic circuit. The malfunction logic generates a trim failure signal that removes the 400-cps

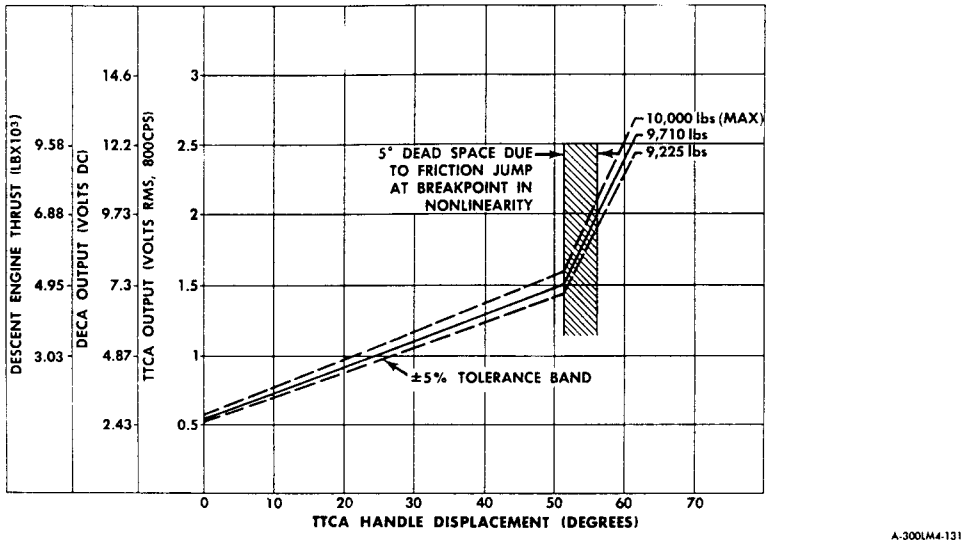

Figure 2.1-52. Throttle Control vs TTCA Displacement

power from the power-switching circuit. The signal is generated, and routed to the LGC and the IS, if any of the following conditions exist:

- The GDA is not moving in the commanded direction.
- The malfunction circuitry fails.
- The transducer fails.
- The 400-cps motor rotates without a command.
- The 400-cps motor fails.

In the abort guidance mode, roll and pitch trim signals are received from the roll and pitch error channels in the ATCA. A comparator and threshold circuit in the DECA generates negative or positive trim commands and routes them to the malfunction logic, which controls the power-switching circuits as in the primary guidance mode.

2.1.4.5.6 Gimbal Drive Actuators. (See figure 2.1-53.)

There are two GDA's. Each GDA consists, primarily, of a single-phase motor, a feedback potentiometer, and associated mechanical devices. Each GDA can extend or retract 2 inches from the midposition to tilt the descent engine a maximum of +6° or -6° along the Y-axis and Z-axis.

On and off signals are supplied to the GDA's from the power gate circuits in the DECA. The DECA provides 115-volt, 400-cps power to the GDA motor, which controls the stroke of the GDA at a rate of 0.0662 inch per second (7.5 volts per inch) ±10% in a positive or negative direction along the Y-axis and Z-axis. Gimbal position signals are supplied by the feedback potentiometer to a failure-detection circuit in the DECA.

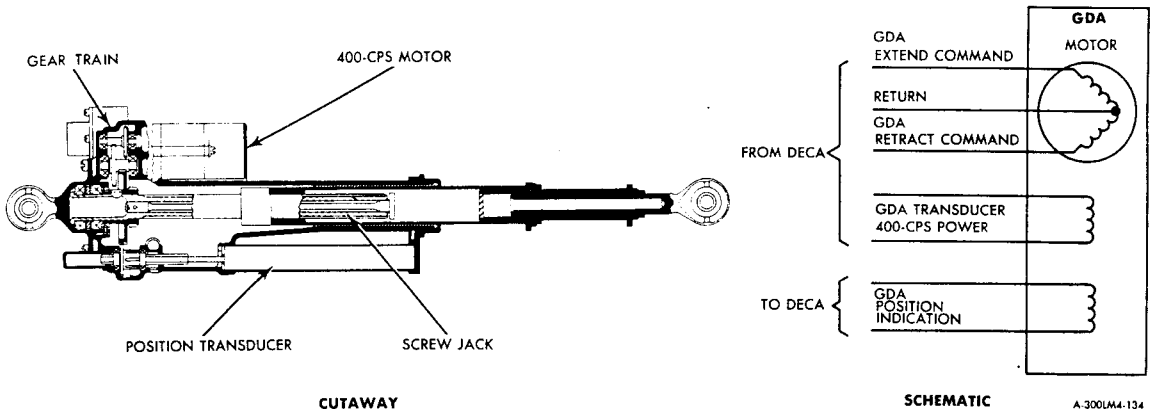

Figure 2.1-53. Gimbal Drive Actuator

2.1.4.5.7 Ascent Engine Arming Assembly. (See figure 2.1-54.)

The AEAA is used in conjunction with the digital uplink assembly (DUA) of the CS. The DUA decodes the VHF (450-mc) uplink commands and routes control commands to the AEAA and program control commands to the LGC. The program control commands instruct the LGC to initiate the APS burn program. At the same time, control commands are routed to the AEAA to arm the ascent engine. These commands energize a bank of relays, which, when energized, short the contacts of the ENG ARM switch. This arms or enables the ascent engine ignition circuits within S&C control assemblies No. 1 and 2.

Normally, the PGNS is used to fire the ascent engine. Another bank of relays is used to keep PGNS in control. Through the normally closed contacts of these relays, the GUID CONT switch is shorted to the PGNS position. MSFN can select AGS control by energizing these relays. When energized, they short the contacts of the GUID CONT switch to the AGS position. Remote AGS program control is achieved with the followup facility of the LGC. Control of the LGC program is performed by MSFN; the LGC, through the followup facility, instructs the AEA as to what functions it is performing. The AEA then follows the LGC by issuing the same commands. These commands from the AEA are present at all times, but are not used until relay K8 is energized. When K8 is energized, the LGC outputs are terminated and the outputs of the AEA are used.

The relay logic consists of two bridging circuits that use four relays each (figure 2.1-55). One bridge circuit (relays K1, K2, K3, and K4), when energized, shorts the contacts of the ENG ARM switch to the ASC position. The other bridge circuit (relays K5, K6, K7, and K8), when energized, shorts the contacts of the GUID CONT switch to the AGS position. The contacts of relays K5, K6, K7, and K8 are normally closed when the relays are deenergized. This conditions shorts the contacts of the GUID CONT switch across the PGNS position.

All the relays are energized by inputs from the DUA. The select commands (select 1, 2, 3, or 4) determine which pair of relays are to be energized to close the bridge circuit. The set commands (set 1 or 2) energize the relays designated by the select command. The reset commands deenergize the bridge circuit.

2.1.4.5.8 S&C Control Assemblies.

The S&C control assemblies contain three similar assemblies. One of the assemblies also processes automatic and manual ascent or descent engine on and off commands. The circuits

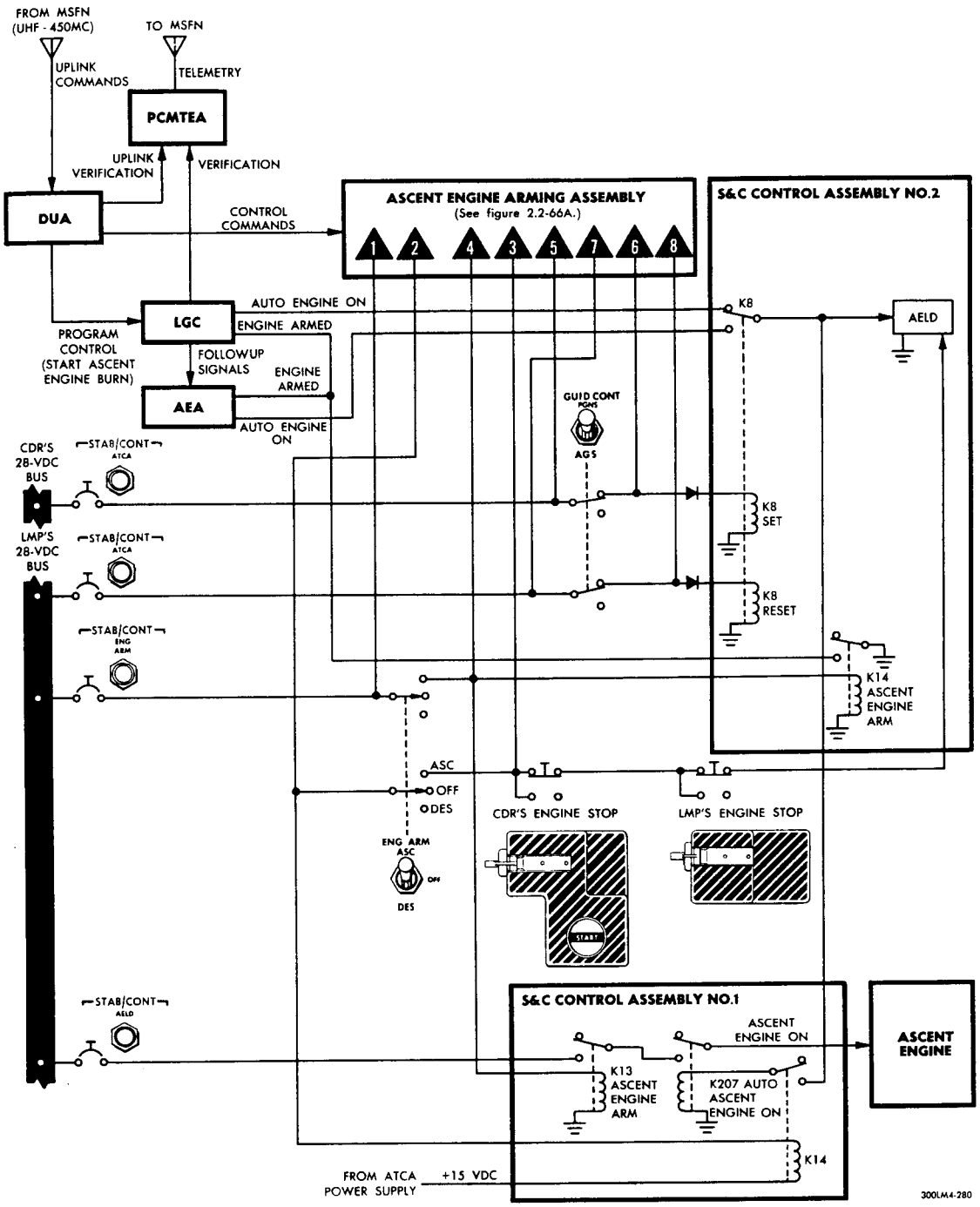

Figure 2.1-54. Ascent Engine Arming Assembly - Functional Diagram

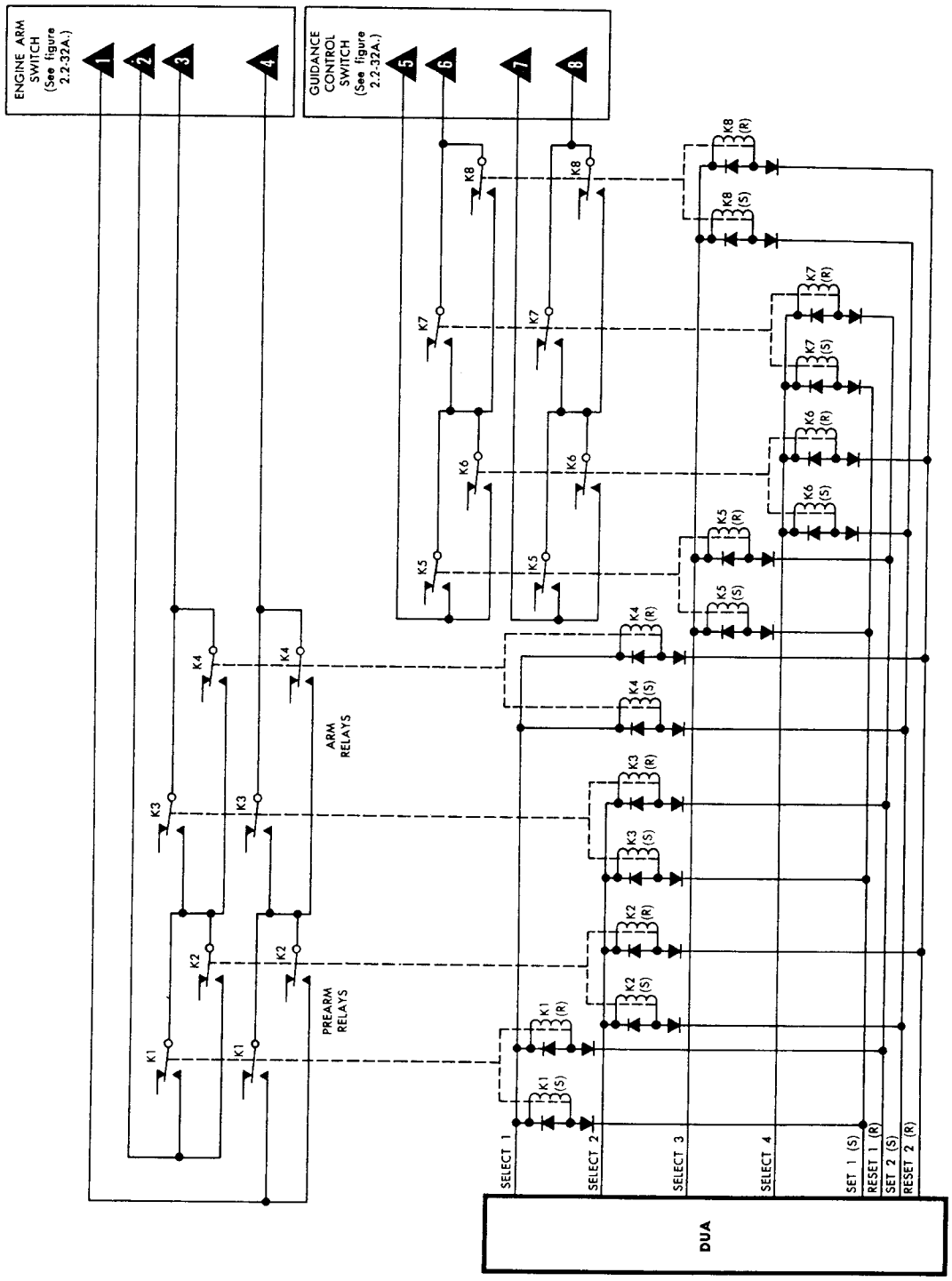

Figure 2.1-55. Ascent Engine Arming Assembly - Schematic Diagram

used for the ascent engine commands are called the ascent engine latching device (AELD). The ascent engine commands are processed, and engine ignition and shutdown commands are sent to the ascent engine and staging sequence commands are sent to explosive devices. The first time that the ascent engine is ignited, the engine-on command starts the staging sequence, using the Explosive Device Subsystem. The S&C control assemblies contain a memory circuit that maintains the ascent engine on if the automatic on signal is lost, until an automatic off signal or a manual stop command is received.

Descent engine commands are processed and sent to the DECA. These commands (descent engine arm, and automatic and manual engine on and engine off) are processed again by the DECA for descent engine iginition and shutdown.

2.1.4.5.9 Gimbal Angle Sequencing Transformation Assembly. (See figure 2.1-56.)

The GASTA operates in conjunction with the FDAI's. The GASTA conditions the analog gimbal angle signals from the IMU before they are applied to the FDAI's to drive the FDAI sphere. The GASTA converts 26-volt, 800-cps signals from the IMU to 15-volt, 400-cps signals. The signals from IMU must be routed through the GASTA for conditioning. Because the AGS has its own GASTA (or conditioning) function, its gimbal angle signals are routed directly to the FDAI's.

2.1.4.6 Oribital Rate Display - Earth and Lunar. (See figure 2.1-57.)

The ORDEAL is an electromechanical device that contains a pair of resolvers, one for each FDAI. The resolvers are driven by a stepper motor, at the orbital rate selected with the ALT SET control on the ORDEAL panel. They may be switched directly into the pitch total attitude channels of the FDAI's.

The resolvers provide a display of LM attitude with respect to a local horizontal referenece frame. They transform the pitch angle in accordance with their shaft position, which is driven by a digital rate servo. The desired shaft rate is obtained by controlling the pulse rate, which is applied to the stepper motor. This pulse rate is derived from the LM 400-cps frequency supply as required by digital logic. Because the transformation is made in the pitch channel only, it is imperative that the inertial reference be aligned with the +Y-axis of the reference along the cross product of the velocity vector ($\bar{V}$) and the position vector from the center of earth ($\bar{R}$).

The ORDEAL is used after obtaining the LM attitude with respect to the local horizontal, from the LGC. The selected FDAI (Commander's or LM Pilot's) is slewed to this angle. The ORDEAL then torques its resolvers at the orbital rate, specified by the ALT SET control, of a circular orbit.

2.1.5 PERFORMANCE AND DESIGN DATA.

The performance and design data for the GN&CS sections are given in tables 2.1-18 through 2.1-21.

Table 2.1-18. Primary Guidance and Navigation Section - Performance and Design Data

Navigation base	
Weight	3 pounds
Diameter	14 inches
Leg length (approx)	10 inches

Table 2.1-18. Primary Guidance and Navigation Section - Performance and Design Data (cont)

Inertial measurement unit	
Weight (approx)	42 pounds
Diameter	12.5 inches
Temperature	TBS
Alignment optical telescope	
Number of detent positions	6
Field of view	60°
Counter readout	000.00° to 359.98°
Counter resolution	±36 arc seconds
Computer control and reticle dimmer assembly	
Height	3-3/8 inches
Width	4-3/8 inches
Depth	2-1/2 inches
Weight	3 pounds
Pulse torque assembly	
Height	2-1/2 inches
Width	11 inches
Depth	13 inches
Weight	15 pounds
Pressure	TBS
Power and servo assembly	
Height	2.675 inches
Width	8.875 inches
Depth	23.5 inches
Weight	20 pounds
Coupling data unit	
Number of channels	5
Height	5.5 inches
Width	11.33 inches

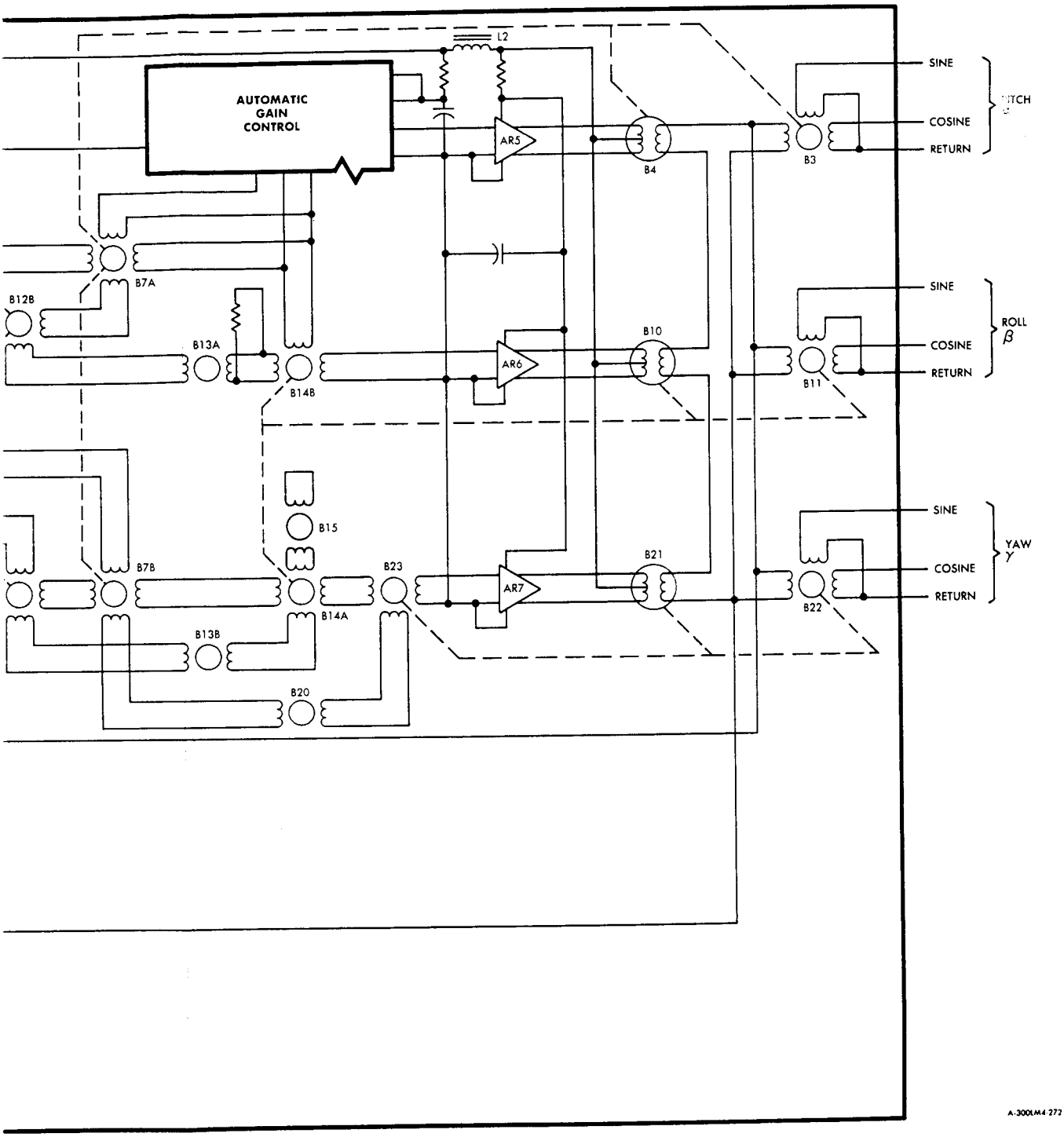

Figure 2.1-56. Gimbal Angle Sequence Transformation Assembly Schematic Diagram

IGLE SEQUENCING TRANSFORMATION ASSEMBLY

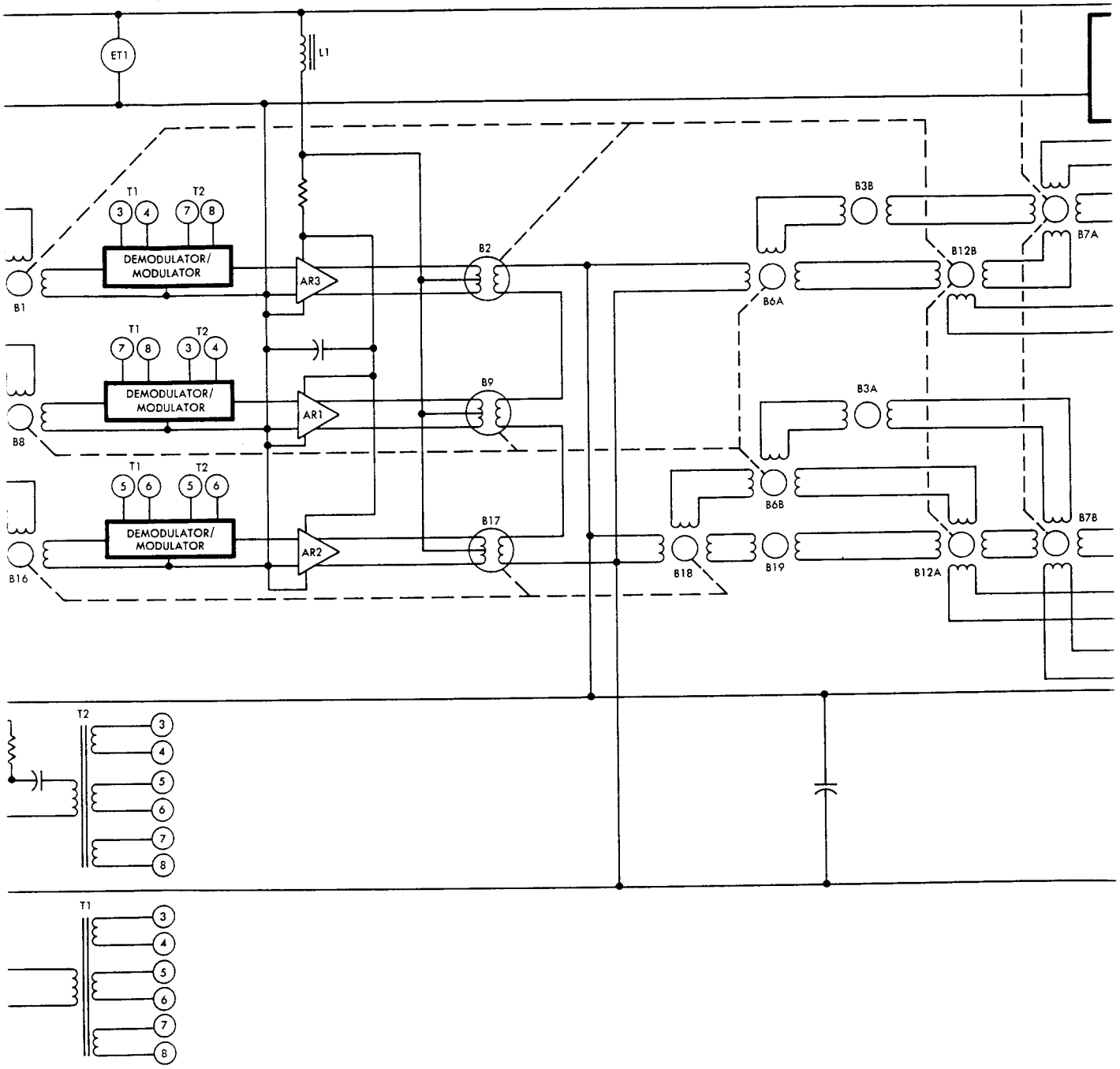

Mi

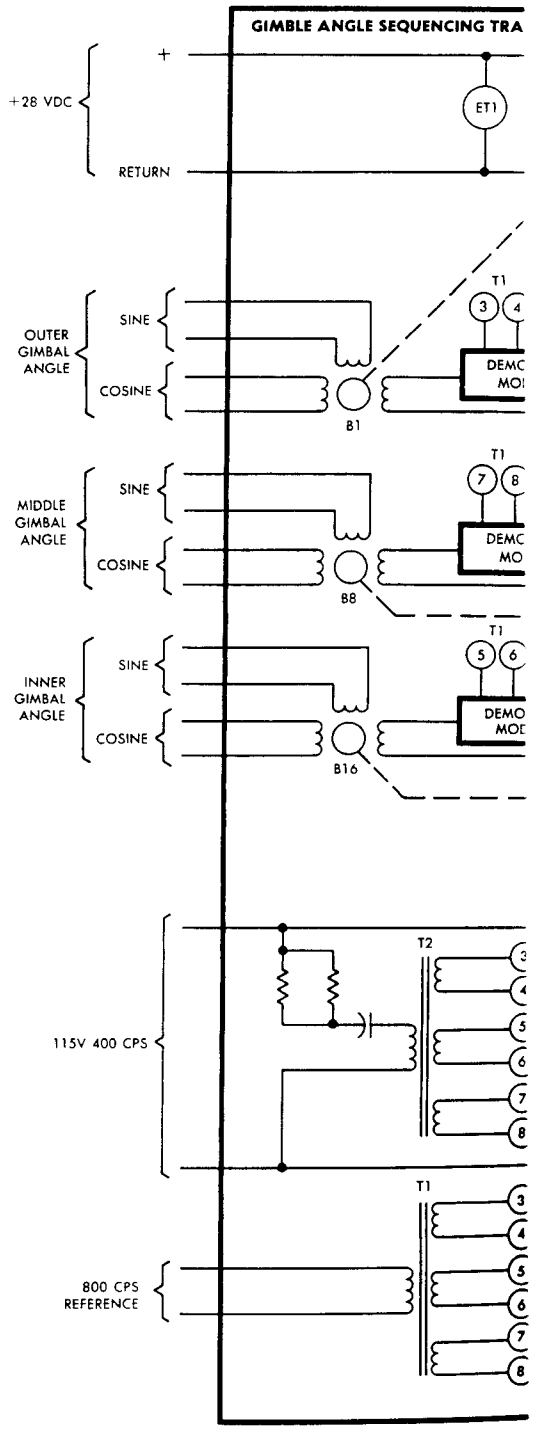
GIMBLE ANGLE SEQUENCING TRA
+28 VDC
+
RETURN
ET1
OUTER GIMBAL ANGLE
SINE
COSINE
B1
T1
3
4
DEMC
MO
MIDDLE GIMBAL ANGLE
SINE
COSINE
B8
T1
7
8
DEMC
MO
INNER GIMBAL ANGLE
SINE
COSINE
B16
T1
5
6
DEMO
MOD
115V 400 CPS
T2
3
4
5
6
7
8
800 CPS REFERENCE
T1
3
4
5
6
7
8

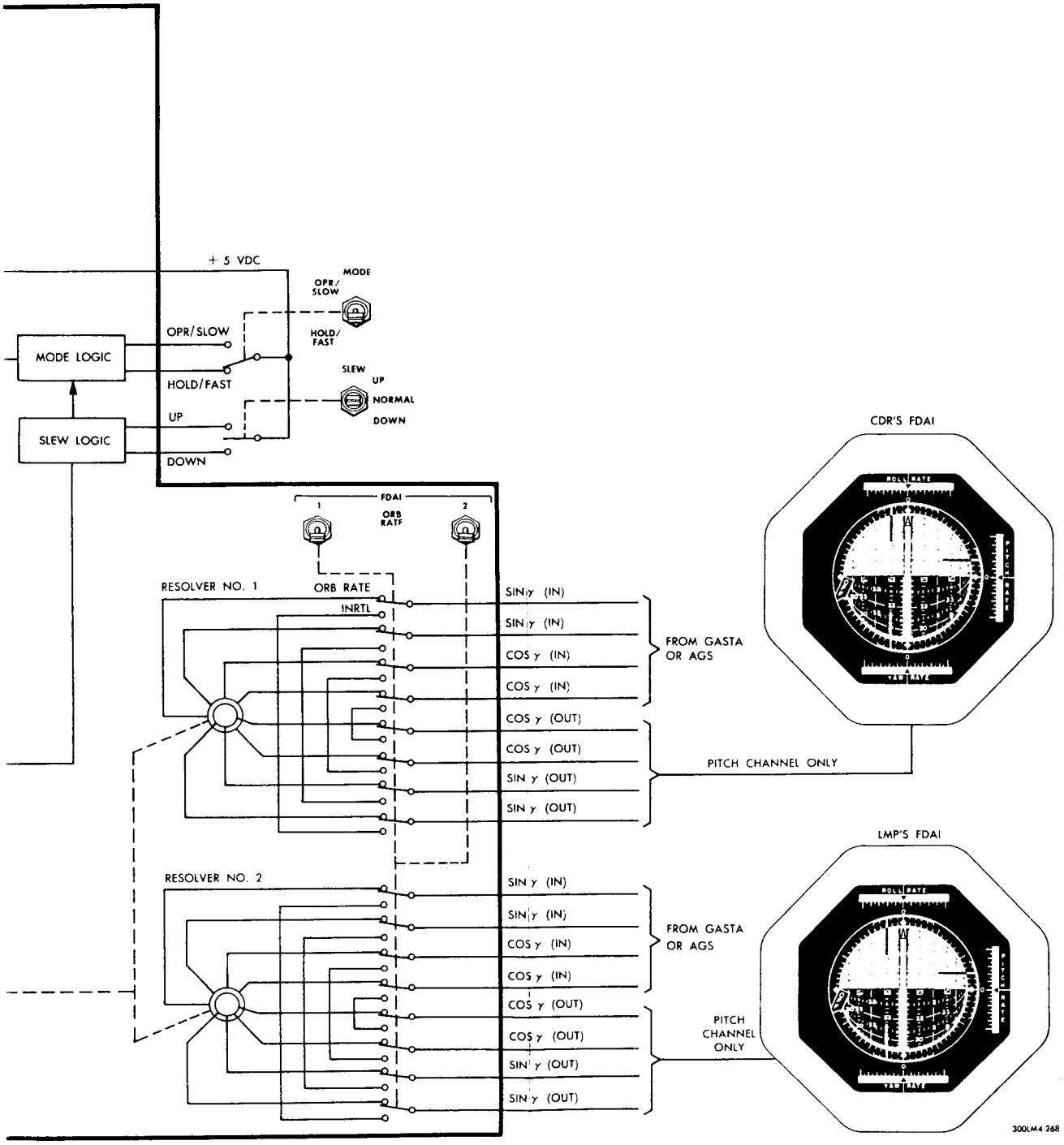

Figure 2.1-57. Orbital Rate Display - Earth and Lunar - Schematic Diagram

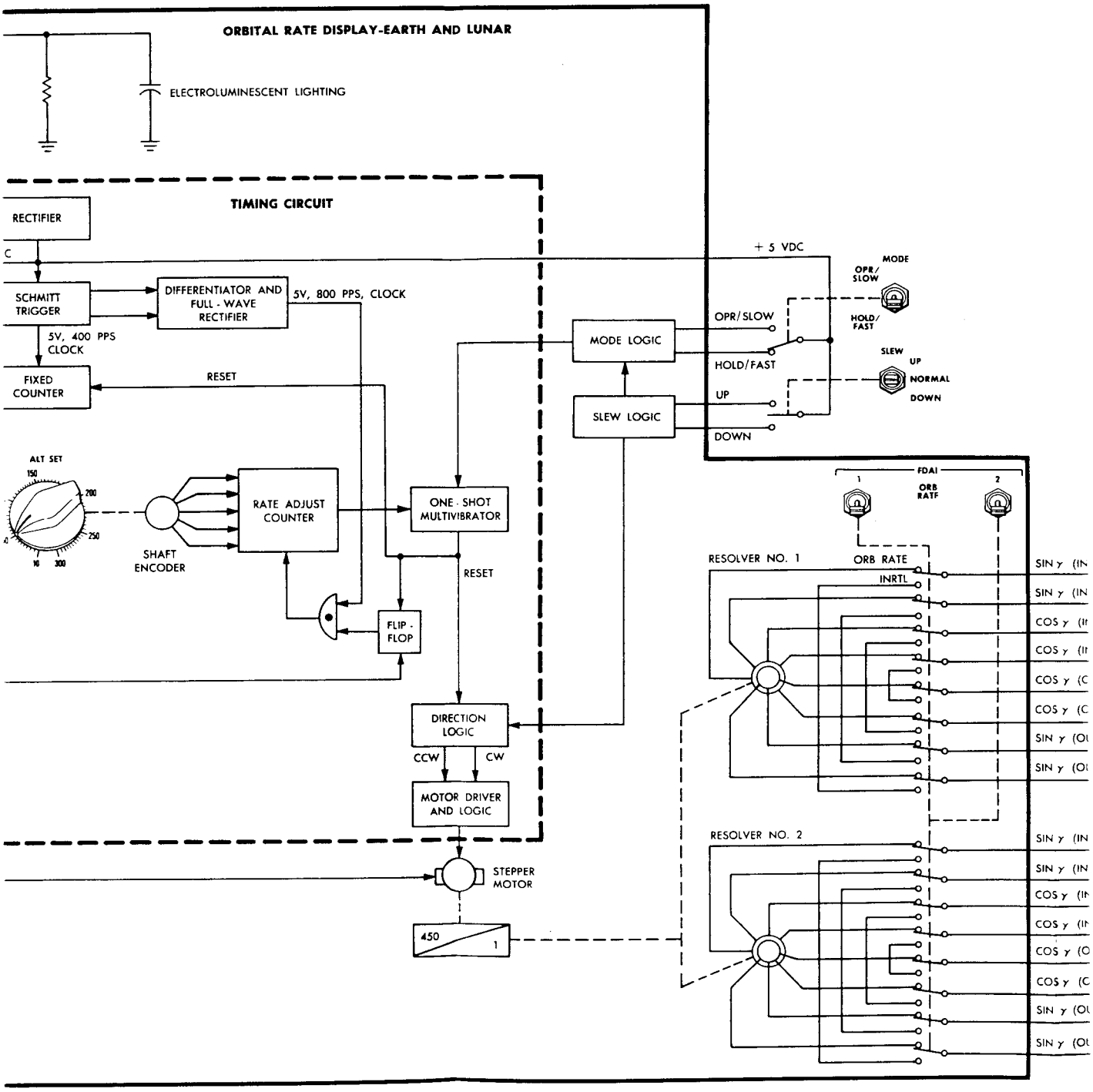

Figure 2.1-57. Orbital Rate Displa

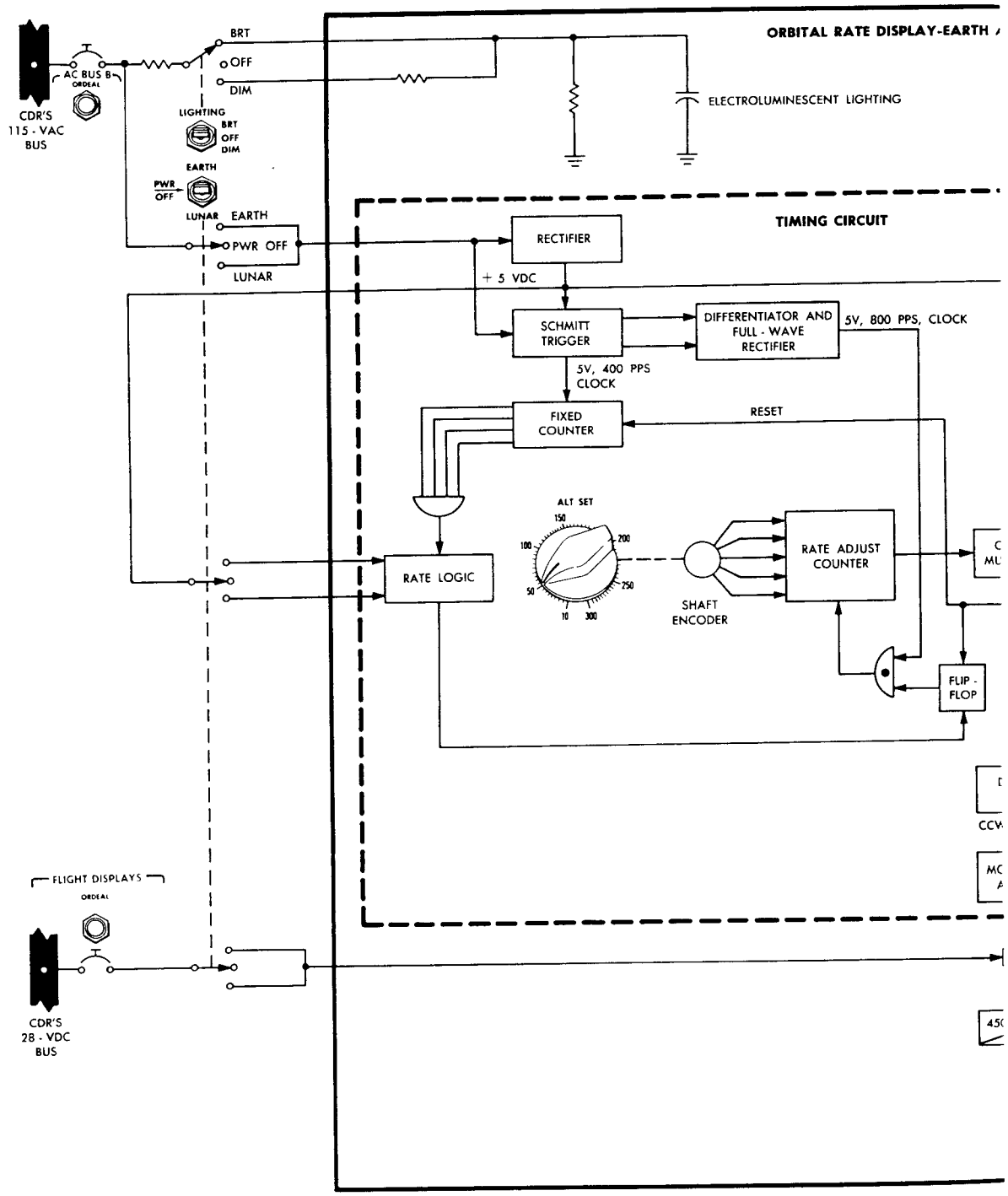
ORBITAL RATE DISPLAY-EARTH
CDR'S 115 - VAC BUS
AC BUS B
ORDEAL
BRT
OFF
DIM
LIGHTING
BRT
OFF
DIM
EARTH
PWR OFF
LUNAR
EARTH
PWR OFF
LUNAR
ELECTROLUMINESCENT LIGHTING
TIMING CIRCUIT
RECTIFIER
+ 5 VDC
SCHMITT TRIGGER
DIFFERENTIATOR AND FULL - WAVE RECTIFIER
5V, 800 PPS, CLOCK
5V, 400 PPS CLOCK
FIXED COUNTER
RESET
ALT SET
150
200
100
250
50
10
300
RATE LOGIC
SHAFT ENCODER
RATE ADJUST COUNTER
FLIP - FLOP
FLIGHT DISPLAYS
ORDEAL
CDR'S 28 - VDC BUS

Table 2.1-18. Primary Guidance and Navigation Section - Performance and Design Data (cont)

Coupling data unit (cont)	
Depth	20 inches
Weight	35 pounds
LM guidance computer	
Computer type	Automatic, electronic, digital, general-purpose, and control
Internal transfer	Parallel (all bits simultaneously)
Memory	Random access
Erasable	Coincident-current core; 2,048-word capacity
Fixed	Core rope; 36,864-word capacity
Word length	16 bits
Number system	Binary 1's complement - for manipulation
Circuitry type	Flat pack, NOR micrologic
Machine instructions	56 total
Regular	42 total
Involuntary	9 total - associated with counter interrupts and program interrupts
Peripheral	5 total (for ground testing only)
Program interrupt options	10 total
Counter interrupt options	29 total
Memory cycle time	12 microseconds
Add time	24 microseconds
Telemetry	Synced from PCM
Uplink	Up to 1,000 bits/second
Downlink	Telemetry start and end pulses at 50 or 10 pps
Basic clock oscillator	2,048 mc
LGC power supplies	One +4-volt switching regulator; One +14-volt switching regulator — Operated from 28-volt d-c input power
Logic	Positive (positive dc = binary 1; 0 volts = binary 0)
Parity	Odd

Table 2.1-19. Abort Guidance Section - Performance and Design Data

Primary power	28±4 volts dc, 90 watts 115±2.3 volts ac, 400 cps, ±5%, 3.5 watts
ASA clock	128 kpps
ASA temperature range	TBS
DEDA clock	128 kpps
AEA clock	1,024±2 pps
AEA and DEDA logic levels	Zero: 0 to 0.5 volt dc One: +3 to +5 volts dc
AEA memory	4,096 words
Number of bits	18 bits per memory word
Cycle time	5 microseconds
AEA temperature range	+60° to +80° F

Table 2.1-20. Control Electronics Section - Performance and Design Data

Attitude and translation controller assembly	
Input signals	Attitude error, command rate, and rate gyro output
Operating frequency	800 cps
Cooling	Conduction through mounting flanges
Temperature range	0° to +160° F
Rate gyro assembly	
Input power	Single- and three-phase, 800 cps
Starting power	18 watts (maximum; three-phase)
Steady-state power	8.5 watts (maximum; three-phase) 1.5 watts (dc)
Transient power	1.0 watt (single phase) 40 watts (dc)
Sensitivity	0.05° per second
Input range	-25° to +25° per second
Input rate frequency	20±4 cps
Descent engine control assembly	
A-C input power nominal voltage	115 vrms
Steady-state voltage limits	+2.5 to -2.5 vrms
Operating temperature range	+57° to +97° F
D-C input power nominal voltage	+4, +15, +28, and -15 volts dc

Table 2.1-20. Control Electronics Section - Performance and Design Data (cont)

Attitude and translation controller assembly (cont)	
A-C power consumption	
Transient peak	6 watts (maximum)
Steady-state average	3 watts (maximum)
D-C power consumption	
Transient peak	5 watts (maximum)
Steady-state average	5 watts (maximum)
Total power consumption	
Transient	27.6 watts (maximum)
Steady-state	7.9 watts (maximum)
Gimbal drive actuator	
A-C power	115±2.5 vrms, single phase, 400 cps
A-C power consumption (steady-state average)	35 watts
Stroke	+2 to -2 inches ±5%
Gimbal position	+6° to -6° ±5%
Gimbal rate	0.2°/sec ±10%
Frequency of operation	5.0 cps (maximum)
Attitude controller assembly	
Operating power	28 volts, 800 cps
Type of sensor	Proportional transducer
Displacement	0.28 volt/degree
Thrust/translation controller assembly	
Operating power	28 volts, 800 cps
Type of sensor	Proportional transducer

Table 2.1-21. Orbital Rate Display - Earth and Lunar - Performance and Design Data

Operating power	
AC	115±2.5 vrms, single phase, 400 cps
DC	28±3 volts
Power consumption	
AC	4 watts at 0.9 power factor (minimum)
DC	4 watts
Range of orbital altitude	10 to 310 nm (calibrated in 5-nm steps)
Operating temperature range	0° to +160° F
Weight	5.5 pounds

2.1.6 OPERATIONAL LIMITATIONS AND RESTRICTIONS.

2.1.6.1 General.

The following operational limitations and restrictions pertain to the GN&CS as a whole. Limitations and restrictions that pertain to specific portions of the GN&CS are covered in paragraphs 2.1.6.2 through 2.1.6.5.

- The IMU, ASA, and LGC must not be placed in their operate modes until after 15 minutes of sublimator operation. If this requirement is not observed, erroneous and changing IMU, ASA, and LGC outputs occur during temperature cycling.
- Before and during all ΔV maneuvers, narrow deadband operation must be used to achieve proper control of the thrust vector, for trajectory accuracy. Failure to comply with this procedure produces an unacceptable level of uncertainity in the trajectory.
- The AGS must be updated to the PGNS within 5 minutes before any burn, to minimize error due to drift. In addition, the time from first star fix to completion of AGS alignment must not exceed 16 minutes for powered descent and ascent. If updating is not performed, erroneous data may be stored in the AEA, resulting in trajectory anomalies if the PGNS fails and the AGS is required for abort.
- Continuous heating must be provided for the ASA, IMU, RR, and LR to maintain minimum survival temperature levels. If survival heating fails, permanent degradation or damage of the assemblies may result.
- For accurate updating of AGS state vectors, using the RR, the separation distance between the LM and the CSM must not exceed 100 nm.

2.1.6.2 Primary Guidance and Navigation Section.

The operational limitations and restrictions for the PGNS are as follows:

- IMU fine alignment must be completed at some time prior to any main engine burn, the elapsed time between alignment and the engine burn is dictated by the allowable burn dispersions. A fine alignment must be performed 20 minutes prior to the powered descent and ascent to and from the lunar surface. The time from the first star fix to completion of the IMU alignment must not exceed 10 minutes. These times are established to compensate for stable member drift, which would result in an unacceptable level of error in thrust vector alignment.
- The IMU requires an operating time of 30 minutes, for temperature stabilization, after switching from standby to operate. The first 90 seconds are required by the IMU gyros, to acquire synchronous rotor speed; the remaining time is for temperature stabilization. If the IMU is used during this time, scale factor changes resulting from varying temperature cause degraded attitude data.
- A gimbal lock condition exists if the outer and inner gimbals come within 20° of each other. When these two gimbals become coplanar, attitude data is lost and torquing requirements become infinite.
- To maintain the LGC reference time, the LGC off mode is not used except during sublimator dryout. If the reference time is lost, it is reestablished by the astronauts with DSKY inputs.
- The LGC must be in the operate mode when the IMU is switched to operate, because IMU moding is performed by LGC commands. If this requirement is not observed, the IMU, which places itself in the cage mode at initial IMU operate turn-on, will not disengage cage automatically.
- The AOT field of view must cover a suitable starfield, because LGC programming for IMU alignment is based on specific star requirements. IMU alignment will be inadequate if this requirement is not observed.

The periphery of the AOT field of view must not be within 15° of the sun, because sunlight interferes with the optical assembly.

- The AOT heaters must be on continuously from 30 minutes before first use of the AOT until after last use, to prevent fogging of the lens.
- The AOT must be in the stowed position (azimuth control set to CL) when not in use, to protect the viewing face from RCS plume impingement and space particles. Failure to observe this requirement may result in damage to the lens and will result in inaccurate IMU alignment.
- The RR antenna must be positioned for minimum interference with the AOT when performing IMU alignment; otherwise, the RR occults a large portion of the AOT field of view. The minimum position for the RR antenna is orientation No. I (shaft angle of -77.2°, trunnion angle of 0°).
- During initial turn-on of the PGNS, the LGC and DSKY power must be turned on at least 20 seconds before the CWEA is turned on. Failure to observe this restriction could result in a false alarm condition (LGC warning).

2.1.6.3 Abort Guidance Section.

The operational limitations and restrictions for the AGS are as follows:

- At least 25 minutes must be allowed for ASA warmup, to stabilize the inertial components, otherwise, operation is degraded.
- AEA operation is terminated automatically if its power subassembly d-c input voltage drops below 20 volts dc.
- The ASA gyro rate must not exceed 25°/second; otherwise, output is degraded.
- The AGS update for PGNS/AGS alignment must be completed within 5 minutes before any burn. The time from the first star sighting to the completion of AGS alignment must not exceed 90 minutes for powered descent and ascent to and from the lunar surface. (Earth orbital mission times are a function of mission requirements.) Exceeding or not following these restrictions will result in degraded data stored in AEA which will cause trajectory anomalies.

2.1.6.4 Control Electronics Section.

The operational limitations and restrictions for the CES are as follows:

- The static operating load limit for the GDA is 2,900 pounds.
- The TTCA provides control over the throttle magnitude, from 10% to 92.5 % of maximum thrust.
- Linearity of thrust commanded must be ±5% over the entire throttling range.
- When the ascent engine is on, RCS +X-thrusters are used only for pitch and roll control (and therefore add to ΔV), except as needed when large commands occur or when moments due to center-of-gravity offset exceed the unbalanced couples control boundary. For AGS operation, manual switching to balanced couples may be required during powered ascent at a predetermined time based on prelaunch center-of-gravity predictions. If -X-thrusters are used, excessive fuel consumption results because a portion of the ΔV provided by the ascent engine is cancelled while overcoming the unbalance created by the center-of-gravity offset.
- Before and during ΔV maneuvers minimum (narrow) deadband is commanded. If this restriction is not followed, an uncertainty in trajectory will result.

2.1.6.5 Orbitial Rate Display - Earth and Lunar.

The operational limitations and restrictions for the ORDEAL are as follows:

- The ORDEAL shall be used only when the LM is in a circular orbit. If this restriction is not observed, FDAI pitch displays are degraded.
- The ORDEAL is limited to altitudes between 10 and 310 nm. If these limits are exceeded, outputs are degraded.

RADAR

2.2 RADAR SUBSYSTEM.

2.2.1 INTRODUCTION.

During the landing phase and subsequent rendezvous phase, the LM uses radar navigational techniques to determine distance and velocity. Each phase uses a radar designed specifically for that phase (rendezvous radar (RR), landing radar (LR)). Both radars inform the astronaut and the computer concerning position and velocity relative to acquired target. During lunar landing, the target is the surface of the moon; during rendezvous, the target is the Command Module.

2.2.1.1 Rendezvous Radar and Transponder.

The RR, operated in conjunction with a RR transponder in the CSM, is used to acquire and track the CSM before and during rendezvous and docking. (See figure 2.2-1.) When the primary navigation and guidance section (PGNS) is in control (normal operation), the RR provides the PGNS and cabin displays with line-of-sight (LOS) range and range rate data, and LOS angle and angle rate data with respect to the CSM. If PGNS fails, the astronauts furnish these data to the abort guidance section (AGS). The RR LOS is defined as the line-of-sight direction between the CSM target and the RR antenna. The RR also tracks the CSM target during the coasting and descent engine burn phases of the mission to supply tracking data for any required abort maneuver.

During the rendezvous phase, RR performance is evaluated by comparing RR range and range rate tracking values with Manned Space Flight Network (MSFN) tracking values. A large deviation from the MSFN tracking values indicates a gross error in the RR range and range rate data. Data pertaining to the RR shaft- and trunnion-axis angles and the inertial measurement unit (IMU) gimbal angles are also transmitted to MSFN for comparison with like ground-tracking data.

The RR transponder, a radar receiving and transmitting target, increases the RR maximum-usage range capabilities by reducing the RR transmitting power losses versus range from fourth to second power as compared to skin-track radar. By providing the RR with a discrete radar transmitting signal to acquire and track, the transponder makes the CSM appear to the RR as the only object in its field of view. On acquiring the RR signal illuminating the CSM, the transponder side-steps the RR three-tone, phase-modulated carrier frequency down 40.8 mc to 9792 mc and then transmits the phase-coherent 9792-mc carrier frequency for acquisition by the RR. The three-tone modulation of the transponder-transmitted signal is kept phase-coherent with the RR-transmitted signal received by the transponder.

2.2.1.2 Landing Radar.

The LR provides the PGNS and the astronauts with slant range and velocity data for control of descent to the lunar surface. Based on these data, the PGNS calculates control signals for LM rate of descent, hovering at low altitudes, and soft landing at the selected lunar site. The LR is activated at approximately 50,000 feet above the lunar surface and remains activated until touchdown. In the nominal descent trajectory, slant range data are available to the PGNS at approximately 40,000 feet (no less than 25,000 feet); velocity data, at approximately 35,000 feet (no less than 18,000 feet).

2.2.2 SUBSYSTEM INTERFACES.

The Radar Subsystem interfaces with the Guidance, Navigation, and Control Subsystem (GN&CS), Instrumentation Subsystem (IS) and Electrical Power Subsystem (EPS).

2.2.3 FUNCTIONAL DESCRIPTION.

2.2.3.1 Rendezvous Radar. (See figure 2.2-2.)

The RR provides LOS range, range rate, and antenna angular data to the LM guidance computer (LGC) and to the LM cabin displays. By entry via the data entry and display assembly (DEDA), the abort electronics assembly (AEA) is supplied with range and range rate data for a computer-controlled (LGC or AEA) rendezvous of the LM and CSM.

The RR, when search-sweeping or tracking and locked on to the RR transponder in the CSM, is a continuous-wave coherent system, which uses phase-lock techniques in the radar and in the transponder. When operating with the LGC, the RR derives range, range rate, and shaft and trunnion angle

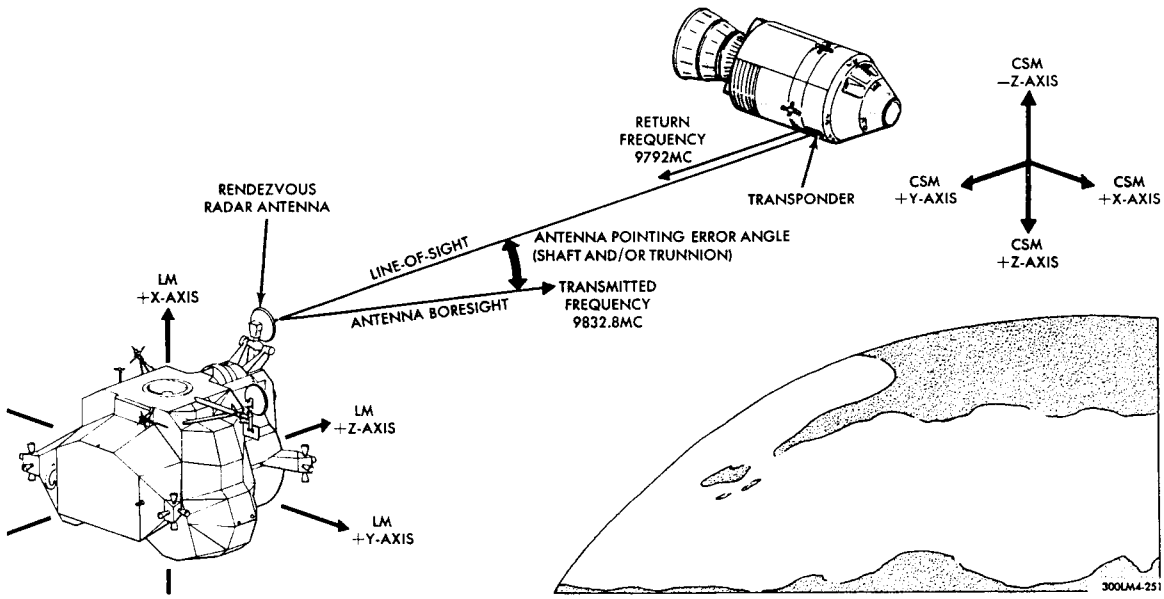

Figure 2.2-1. LM Rendezvous Radar and CSM Target Orientation

data and routes these data to the LGC. The AEA state vector is automatically updated by range and range rate data from the LGC or by manually inserting this data via the DEDA. Range is determined by measuring the time delay between the transmitted signal and the received signal. Range rate is determined by measuring the two-way Doppler shift of the carrier signal received from the transponder. The RR has an unambiguous range capability from 80 feet to 400 nm and a range rate capability from -4,900 to +4,900 fps.

Range and range rate data are accepted by the LGC only upon program demand. The CDU continuously receives the shaft and trunnion angles, converts them to digital form, and sends these data to the LGC upon program demand. In addition to the RR outputs to the LGC, range and range rate are displayed in the cabin. The shaft and trunnion angles and angle rates are indicated as elevation and azimuth angles by the FDAI and as pitch and yaw rates by the X-pointer indicator on panels 1 and 2. The azimuth indication is derived from the trunnion angle; the elevation indication, from the shaft angles. The angle rates are derived from the gyro torquer currents.

The RR consists of an antenna assembly and an electronics assembly. The antenna assembly multiplies the 102.425-mc carrier signal generated in the electronics assembly by 96, to obtain the 9832.8-mc transmitter signal. In free flight, the LGC computes the LOS angle to the CSM and then points the LM +Z-axis to the CSM target. The LGC designates the RR antenna angles, pointing the RR antenna to the target, so that the 9832.8-mc transmitter signal can be acquired by the transponder.

The transponder sweeps ±104 kc about its nominal 9792-mc transmitter frequency until the RR 9832.8-mc (plus Doppler) signal is detected. Concurrent with automatic detection, the transponder halts the frequency sweep and acquires the RR transmitter signal by phase-locking to the carrier frequency. The transponder side-steps the RR transmitter signal 40.8 mc to 9792 mc (plus Doppler) and transmits that signal for acquisition by the RR.

The RR search-sweeps until it acquires the transponder-transmitted signal, then locks on to the 9792-mc plus Doppler carrier frequency. At this time, the radar angle-tracking loop is closed between the RR

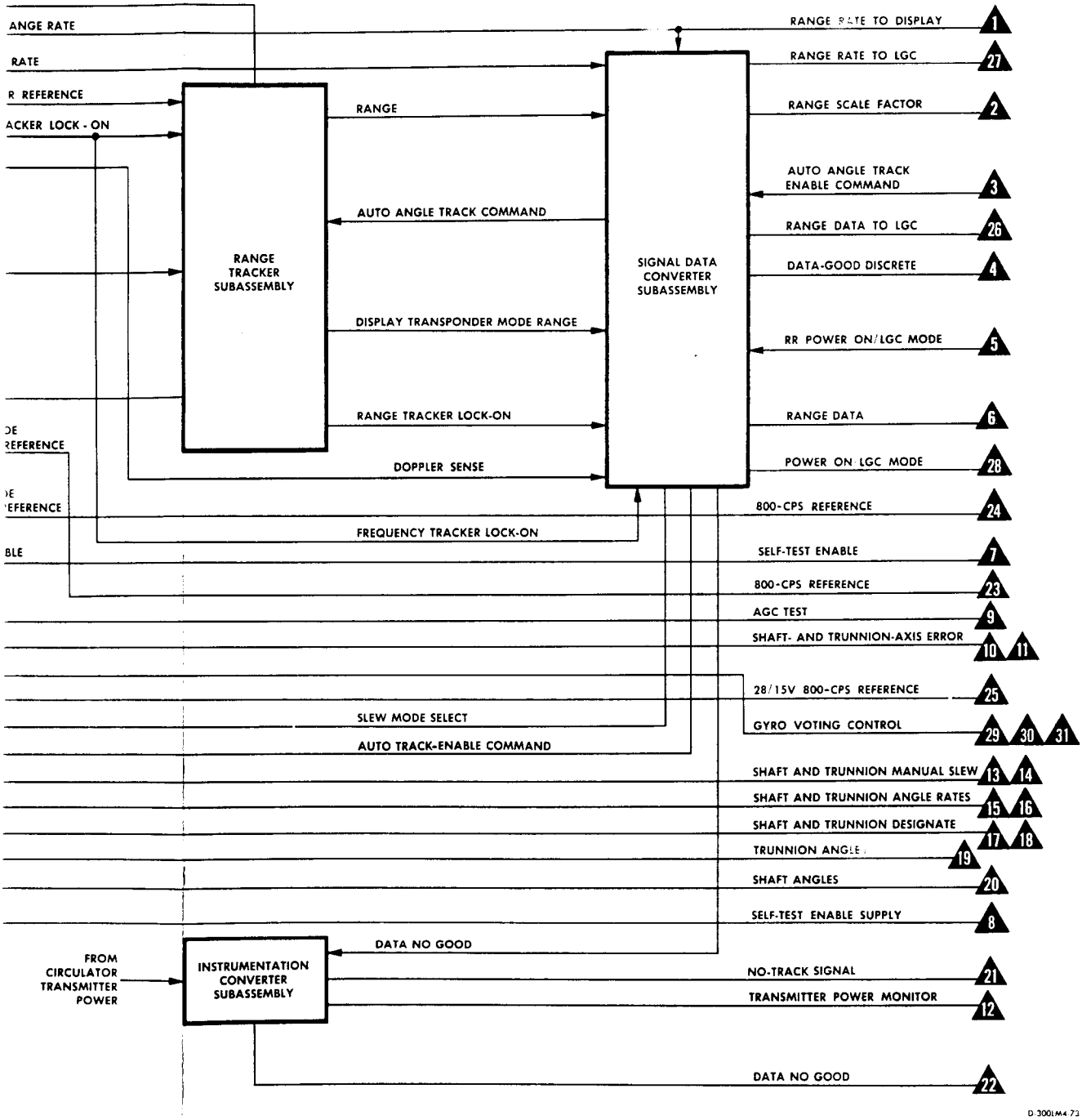

Figure 2.2-2. Rendezvous Radar - Block Diagram

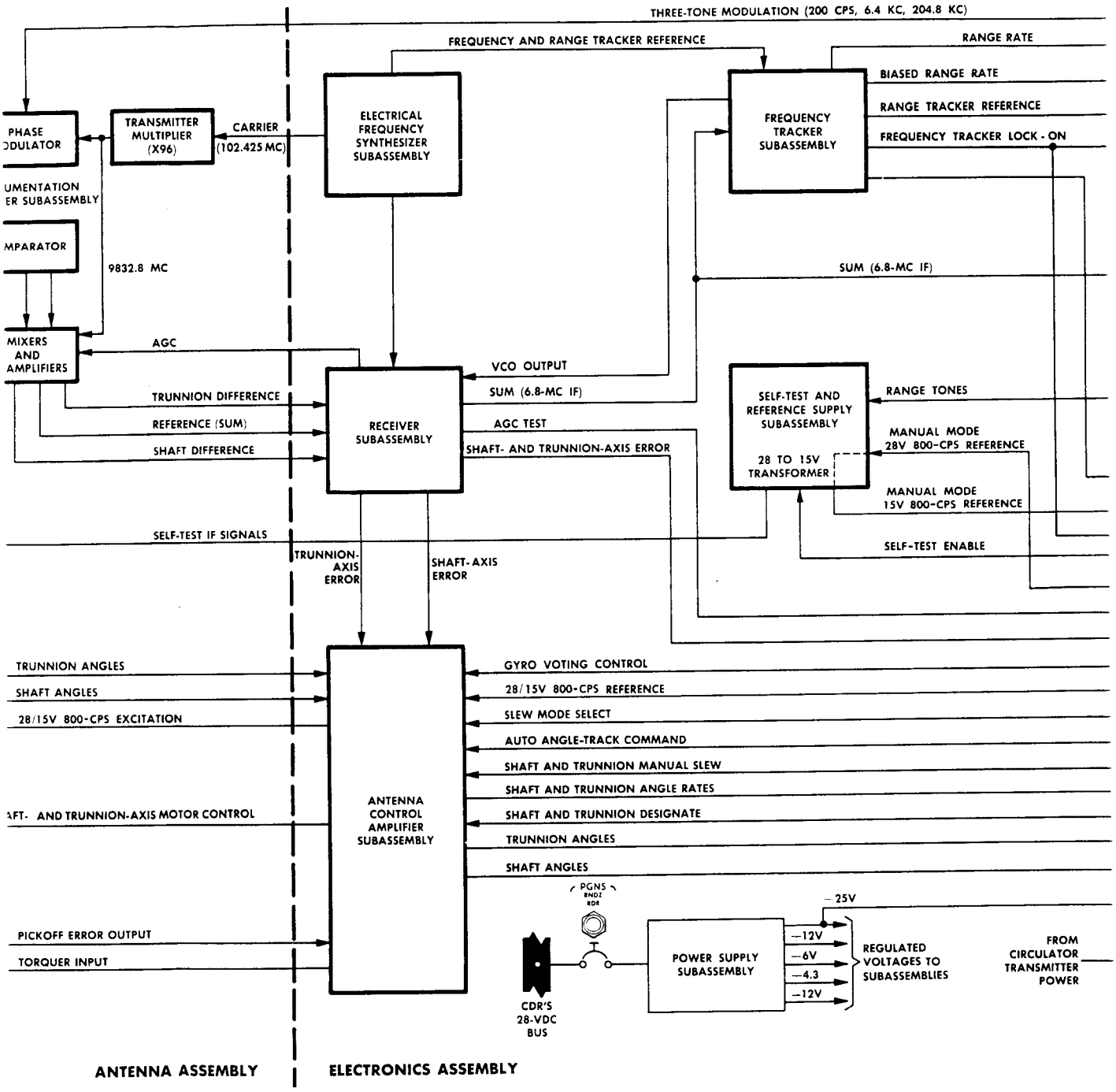
THREE-TONE MODULATION (200 CPS, 6.4 KC, 204.8 KC)
FREQUENCY AND RANGE TRACKER REFERENCE
RANGE RATE
BIASED RANGE RATE
RANGE TRACKER REFERENCE
FREQUENCY TRACKER LOCK-ON
PHASE
ODULATOR
TRANSMITTER MULTIPLIER (X96)
CARRIER (102.425 MC)
ELECTRICAL FREQUENCY SYNTHESIZER SUBASSEMBLY
FREQUENCY TRACKER SUBASSEMBLY
UMENTATION
ER SUBASSEMBLY
MPARATOR
9832.8 MC
SUM (6.8-MC IF)
MIXERS AND AMPLIFIERS
AGC
VCO OUTPUT
TRUNNION DIFFERENCE
SUM (6.8-MC IF)
RECEIVER SUBASSEMBLY
SELF-TEST AND REFERENCE SUPPLY SUBASSEMBLY
RANGE TONES
REFERENCE (SUM)
AGC TEST
MANUAL MODE 28V 800-CPS REFERENCE
SHAFT DIFFERENCE
SHAFT- AND TRUNNION-AXIS ERROR
28 TO 15V TRANSFORMER
MANUAL MODE 15V 800-CPS REFERENCE
SELF-TEST IF SIGNALS
SELF-TEST ENABLE
TRUNNION-AXIS ERROR
SHAFT-AXIS ERROR
TRUNNION ANGLES
SHAFT ANGLES
28/15V 800-CPS EXCITATION
GYRO VOTING CONTROL
28/15V 800-CPS REFERENCE
SLEW MODE SELECT
AUTO ANGLE-TRACK COMMAND
SHAFT AND TRUNNION MANUAL SLEW
SHAFT AND TRUNNION ANGLE RATES
AFT- AND TRUNNION-AXIS MOTOR CONTROL
ANTENNA CONTROL AMPLIFIER SUBASSEMBLY
SHAFT AND TRUNNION DESIGNATE
TRUNNION ANGLES
SHAFT ANGLES
PGNS
RNDZ
RDR
−25V
PICKOFF ERROR OUTPUT
TORQUER INPUT
POWER SUPPLY SUBASSEMBLY
−12V
−6V
−4.3
−12V
REGULATED VOLTAGES TO SUBASSEMBLIES
FROM CIRCULATOR TRANSMITTER POWER
CDR'S 28-VDC BUS
ANTENNA ASSEMBLY
ELECTRONICS ASSEMBLY

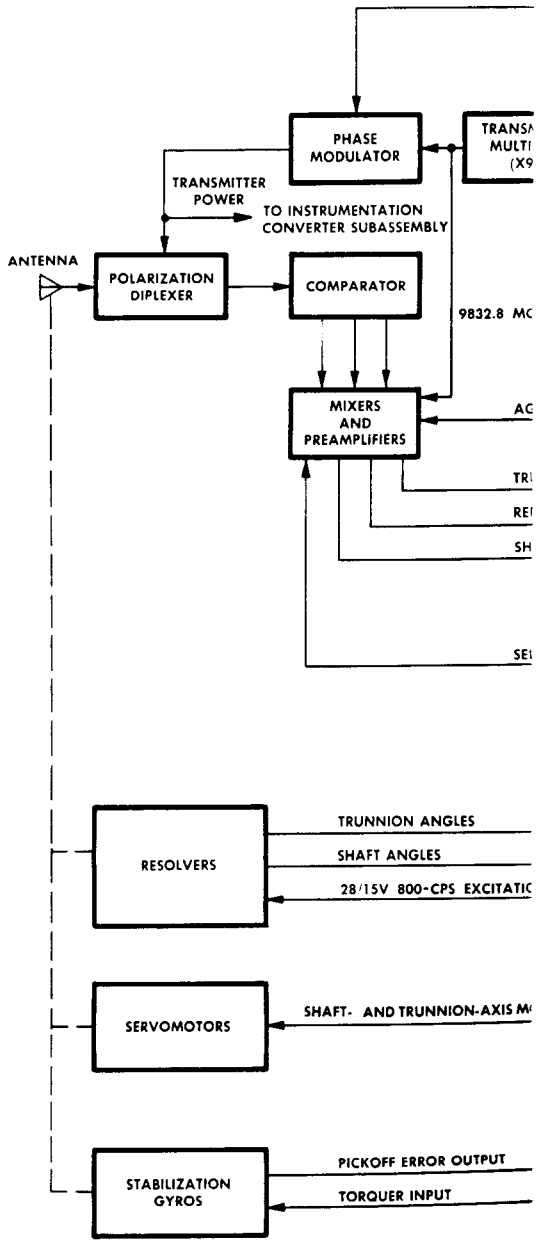

Note:

▲ See rendezvous radar functional flow diagram.

ANTENNA

and the transponder. The RR modulates its transmitted 9832.8-mc signal with range tones. The transponder demodulates the RR-transmitted signal and modulates its 9792-mc (plus Doppler) signal with the range tones phase-coherent with the range tones present on the received RR-transmitted signal.

The transponder signal is received by a four-port feedhorn. The feedhorn, arranged in a simultaneous lobing configuration, is located at the focus of a Cassegrainian antenna. (See figure 2.2-3.) If the transponder is directly in line with the RR antenna boresight, the transponder signal energy is equally distributed to each port of the feedhorn. If the transponder is not directly in line, the signal energy is unequally distributed among the four ports.

The RF signal passes through a polarization diplexer to a comparator, which processes the RF signal to develop sum and difference signals. The sum signal represents the sum of energy received by all feedhorn ports (A+B+C+D). (See figure 2.2-3.) The difference signals, representing the difference in energy received by the feedhorn ports, are processed along two channels: a shaft-difference channel and a trunnion-difference channel. The shaft-difference signal represents the vectoral sum of the energy received by the vertically adjacent ports (A+D)-(B+C) of the feedhorn. The trunnion-difference signal represents the vectoral sum of the energy received by the horizontally adjacent ports (A+B)-(C+D) of the feedhorn. The comparator outputs are heterodyned with the transmitter frequency (9832.8 mc) to obtain three 40.8-mc IF signals. The sum channel (reference), trunnion channel, and shaft channel of the preamplifiers amplify their respective IF signals, which are then routed to the receiver subassembly of the electronics assembly.

The electronics assembly furnishes crystal-controlled signals, which drive the RR transmitter and provide a reference for processing the return signal. The electronics assembly also supplies servo drive signals for antenna positioning and angle tracking. The frequency synthesizer subassembly develops the carrier frequency (102.425 mc), which is multiplied, by 96, to 9832.8 mc (X-band) in a multiplier chain in the antenna assembly and phase modulated by three tones (200 cps, 6.4 kc, and 204.8 kc). The tones are generated by a reference generator in the range tracker. The receiver subassembly processes the three 40.8-mc IF preamplifier outputs in three separate channels. The three 40.8-mc IF signals (sum, trunnion, and shaft) are converted into 6.8-mc IF signals. The sum signal (6.8-mc IF) is fed to the range tracker subassembly.

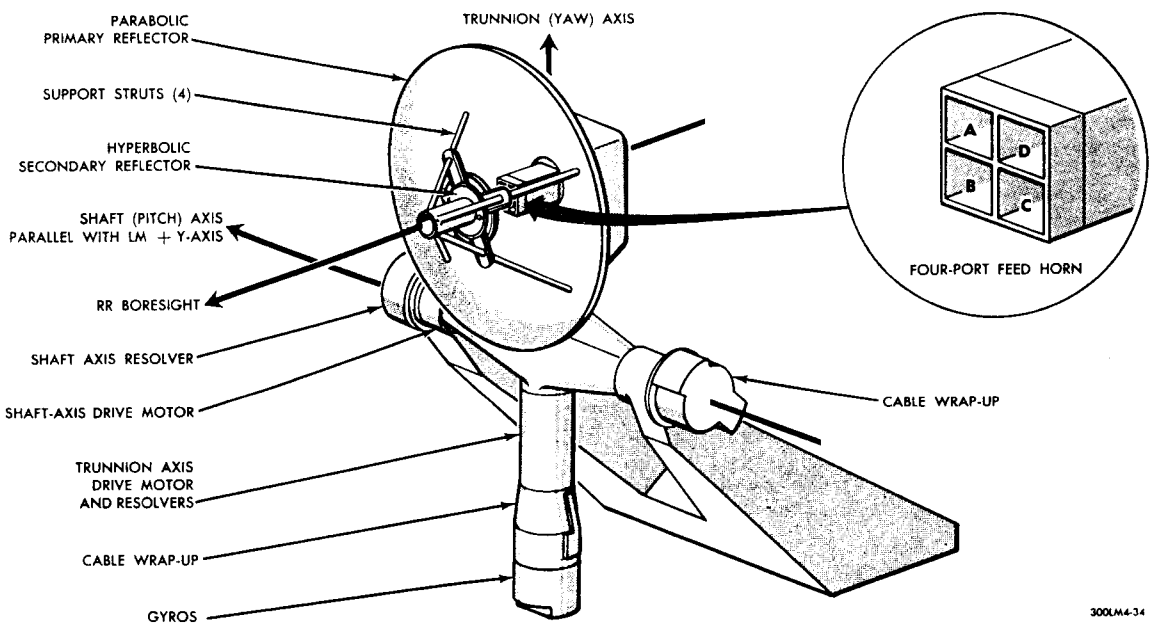

Figure 2.2-3. Rendezvous Radar Antenna Assembly

The range tracker sequentially compares the phase of the 200-cps, 6.4-kc, and 204.8-kc return modulations with the phase of the reference signals from a reference counter, to provide range information to the signal data converter. This operation cannot take place until the frequency tracker has locked up and the LGC has issued an auto track enable signal so that the range tracker can lock up. Comparison of the phase of the return and reference signals provides unambiguous ranging from 80 feet to 400 nm. The range output is fed to the LGC and to the cabin displays.

The sum signal output of the receiver subassembly is also fed to the frequency tracker subassembly. The received frequency is not constant; it varies with the range rate between the LM and the CSM. The difference in frequency (Doppler frequency) is a function of the rate of change of range. By measuring the Doppler frequency, the range rate may be determined. The frequency tracker subassembly detects the Doppler frequency by continuously comparing the received frequency, after it has been converted to 6.8 mc in the receiver subassembly, with a reference frequency. A voltage-controlled oscillator (VCO) in the frequency tracker subassembly is maintained at the received frequency plus Doppler frequency by means of an automatic phase-lock loop. Any change in Doppler frequency results in a corresponding change in VCO frequency. The instantaneous frequency of the VCO is a function of range rate. Range rate data are fed to the LGC and to the cabin displays.

The Doppler frequency component must be eliminated from the ranging and antenna-positioning circuits because it would cause inaccuracies. Therefore, the loop that controls the VCO frequency encompasses part of the receiving circuits. A feedback loop removes the Doppler frequency from the ranging and antenna-positioning circuits, but maintains the VCO at the received frequency (6.8 mc ± Doppler frequency).

After double conversion to 1.7 mc in the receiver, the trunnion- and shaft-difference signals are demodulated, using the sum signal as a reference. The trunnion- and shaft-difference (pointing error) signals obtained are used to torque gyros, which then provide trunnion- and shaft-axis servo drive signals for correcting antenna pointing errors. The position of the transponder with respect to the RR boresight determines the antenna pointing error signals generated. With the RR boresight facing above or below the transponder, a shaft pointing error signal is generated only in the shaft angle error detector. With the RR boresight facing to either side of the transponder, a trunnion pointing error signal is generated. An AGC loop in the receiver subassembly makes the output of the angle error detector dependent on the antenna angle error only, and independent of signal amplitude. The output of the angle error detector causes the motor of the antenna trunnion and shaft to position the antenna so that the boresight is aligned with the CSM.

A gyro-stabilization loop compensates for vehicle angular motion. When tracking the transponder, RR antenna attitude indicates the direction of the transponder with respect to the LM. Resolvers transform the antenna-to-LM vehicle angles into electrical signals, which are fed to the LGC through the coupling data unit (CDU). When the antenna is in antenna orientation No. I, angular data are also routed to the LM displays.

2.2.3.1.1 Modes of Operation.

The RR operates in three modes: automatic tracking, slew (manual), and LGC control. The RENDEZVOUS RADAR selector switch (panel 3) is used to select the mode of operation.

Automatic Tracking Mode. The automatic tracking mode is selected by setting the RENDEZVOUS RADAR selector switch to AUTO TRACK. This mode enables the RR to track the CSM automatically after it has been acquired; tracking is independent of LGC control. When this mode is selected, tracking is maintained by comparing the received signals from the shaft and trunnion channels with the sum channel signal. The resultant error signals drive the antenna, thus maintaining track.

Slew Mode. The slew (manual) mode is selected by setting the RENDEZVOUS RADAR selector switch to SLEW. This mode enables an astronaut to slew the antenna manually to a position for acquisition of the CSM.

LGC Control Mode. The LGC control mode is selected by setting the RENDEZVOUS RADAR selector switch to LGC. In this mode, the LGC automatically controls antenna positioning, initiates automatic tracking once the CSM transponder is acquired, and controls change in antenna orientation. When this mode is

selected, the RR sends a RR power-on/LGC discrete to the LGC. Automatic control of RR search and acquisition is provided by the PGNS, which transmits LGC-derived slewing commands to position the RR antenna.

2.2.3.1.2 General Operation. (See figure 2.2-4.)

The LGC positions the radar antenna at an angle such that its transmitted continuous-wave radiation can be received at the transponder. When the antenna is within 0.5° of the LGC-estimated direction to the transponder (a total maximum antenna pointing error of 2.5°), the LGC provides an auto-track-enable signal that initiates the tracking function. The antenna boresight may be as much as 2.5° off the target LOS due to cumulative mechanical, electrical, and LGC programming errors. After the frequency tracker has locked up with the transponder carrier frequency, the RR angle-tracks the transponder target. During tracking, the RR supplies shaft and trunnion angles to the LGC via the CDU analog-to-digital converters.

The shaft and trunnion resolver outputs are routed through the SHFT/TRUN ∢ switch (panel 1) and the RATE/ERR MON switch to the FDAI error needles. With the RATE/ERR MON switch set to RNDZ RADAR, the shaft angle signals are applied to the pitch error needle and the trunnion angle signals are applied to the yaw error needle. The SHFT/TRUN ∢ switch provides the desired scaling factor (±5° or ±50°) for the resolver outputs. With the RATE/ERR MON switch set to RNDZ RADAR, the shaft and trunnion rates, corresponding to RR boresight angular rates, are routed through the X-POINTER SCALE switch (panels 1 and 3) for display on the X-pointer indicator (panels 1 and 2): the ELEV RT and AZ RT placarding on the indicators are illuminated. The setting of each X-POINTER SCALE switch determines the scaling and whether the X.1 or X1.0 placarding on the associated indicator is illuminated.

The RR angle-tracking loop cannot be completed until the transponder is phase locked to the RR signal and the RR receiver is phase locked to the transponder signal. In the RR, lock-on to the transponder signal (9792 mc) activates ranging modulation and the ranging tracking error is nulled within 11 seconds after the RR locks on to the transponder signal or after the LGC issues the auto-track-enable discrete, whichever is completed last. After range and range rate lock-on are completed, the RR issues a data-good discrete to the LGC. The NO TRACK light (panel 3) is extinguished. Range and range rate data are now available to the LGC and to cabin displays. Besides shaft and trunnion angles, angle rate data are available to cabin displays.

If the target is lost during LGC mode tracking, the NO TRACK light goes on, indicating that the RR is not locked on to the CSM. A no-track signal supplied to the caution and warning electronics assembly (CWEA) causes the RNDZ RDR caution light (panel 2) to go on. The PGNS takes control and positions the antenna to regain acquisition and automatic tracking. The acquisition sweep generator in the frequency tracker begins to sweep and continues sweeping until acquisition is achieved and angle tracking is restored. When ranging circuits in the electronics assembly achieve lock-on, the data-good discrete is restored, allowing range and range rate from the electronics assembly to be accepted by the LGC and routed through the RNG/ALT MON switch (set to RNG/RNG RT) to the RANGE and RANGE RATE indicators (panel 1).

With the RENDEZVOUS RADAR selector switch set to SLEW, the RR is operated in the slew mode, using the SLEW and SLEW RATE switches (panel 3). With the SLEW RATE switch set to HI, the slew rate is a nominal 7° per second; with the switch set to LO, the slew rate is a nominal 1.3° per second. The astronaut can slew the antenna in the desired direction by holding the SLEW switch in the required position (UP, DOWN, LEFT, or RIGHT) and using the proper slew rates for the periods of time required. When automatic tracking is desired, the RR must be placed in the automatic-tracking mode or LGC mode.

Setting the RADAR TEST switch to RNDZ implements the RR self-test. The TEST/MONITOR switch and the SIGNAL STRENGTH indicator (panel 3) provide readout of the test parameters for AGC, transmitter power, and shaft- and trunnion-angle errors. Shaft- and trunnion-angle rates are read on the X-pointer indicator; angles, on the FDAI. The range and range rate self-test parameters are monitored on the RANGE and RANGE RATE indicators. The astronauts can monitor antenna temperature, using the TEMP MONITOR switch and the TEMP indicator on panel 3. If antenna temperature exceeds the temperature limits (-54° to +148° F), the CWEA turns the HEATER caution light (panel 2) on.

In the LGC control mode, the antenna is automatically reoriented from antenna orientation No. I to antenna orientation No. II by LGC-programmed slewing commands. This antenna reorientation involves a specific combination of single-axis, alternate shaft and trunnion slewing to move the antenna to within the desired region. Dual-axis control commences after the antenna reaches the desired region.

The PGNS gains control of the RR antenna when the LGC receives the RR power-on/LGC discrete. This signal is initiated, with the PGNS: RNDZ RDR circuit breaker closed, by setting the RENDEZVOUS RADAR selector switch to LGC. The LGC initializes the control loops by sending the zero RR-CDU discrete to the CDU (RR channels). This discrete clears the read counters in the trunnion and shaft CDU section and inhibits transmission of incrementing pulses from the read counters. The error counters are also cleared and inhibited by a logic circuit within the CDU. The LGC removes the zero discrete to enable the read counters and issues a RR-CDU error-counter-enable discrete to enable the error counters. The LGC then begins sending pulses representative of positioning angles to the digital-to-analog converters. The resulting analog signal is routed to the radar electronics to position the antenna. The signals are applied to the antenna-mounted gyros, which are torqued, and the resulting error signals are applied to the servomotors via servoamplifiers. Positioning data are obtained from the resolver signals. These data are applied to the analog-to-digital converter in the CDU, which converts the positional angles to digital pulses and then routes these pulses to the LGC.

In positioning the antenna to LOS with respect to the CSM, the LGC commands a maximum slew rate of 7° per second until the antenna boresight is within 7° of LOS with the CSM target. Within 7° of LOS, the LOS slew rate decrease (in degrees per second) is equal to the angular error decrease (in degrees) between the antenna boresight and the LOS with respect to the CSM. The slew rate decreases and then terminates when the RR acquires the CSM target.

2.2.3.1.3 Antenna Orientation. (See figures 2.2-5 and 2.2-6.)

The attitude of the antenna axis with respect to the LM axes depends on its antenna orientation. There are two types of antenna orientation: antenna orientation No. I and antenna orientation No. II; both can be manually initiated by the astronauts by display and keyboard (DSKY) entries. The operational and mechanical limits for antenna orientation No. I and II are depicted in figures 2.2-5 and 2.2-6, respectively. The RR antenna performs within the operational limits with optimum accuracy and minimum degradation. The operational limits are the LGC program limits and operational slewing limits. For antenna orientation No. I and II, the antenna mechanical limits are the shaft and trunnion mechanical coverages, stated in boresight angular degrees, from one hardstop to the other hardstop. The shaded areas on the vector diagrams of the figures denote the mechanically restricted areas in boresight angles. The actual mechanical limits are 90° from the boresight mechanical limits. The hardstops act against the trunnion and shaft axis; they prevent damage to the RR antenna and LM body.

Antenna Orientation No. I. This orientation is used for transponder tracking during rendezvous operation. With reference to the +Z-axis, orientation No. I provides LOS operational shaft coverage from -70° to +60° and LOS operational trunnion coverage from -55° to +55°.

Antenna Orientation No. II. This is an overhead orientation, used during lunar stay and subsequent ascent. With respect to the +Z-axis, orientation No. II provides LOS operational shaft coverage from +45° to +155°. LOS operational trunnion coverage from -55° to +55° is with respect to the -Z-axis. In orientation No. II, the antenna is rotated 180° about the trunnion axis from orientation No. I to obtain the required angle coverage.

2.2.3.2 Rendezvous Radar Transponder.

The RR transponder consists of an electronics assembly (figure 2.2-7) and an antenna assembly (figure 2.2-13). The electronics assembly contains the following functional subassemblies: microwave, receiver, carrier lock loop, tone-modulation detector, and power supply. The transponder antenna receives the 9832.8-mc (plus Doppler) phase-modulated signal transmitted from the RR. The received signal is routed through a waveguide to the microwave subassembly. A unidirectional circulator in the microwave subassembly transfers the received signal to a mixer, where it is mixed with an internally generated 9792-mc (plus Doppler) signal. The output of the mixer is the difference frequency of 40.8 mc, which is fed to the receiver subassembly. This difference frequency contains the range tone phase modulation.

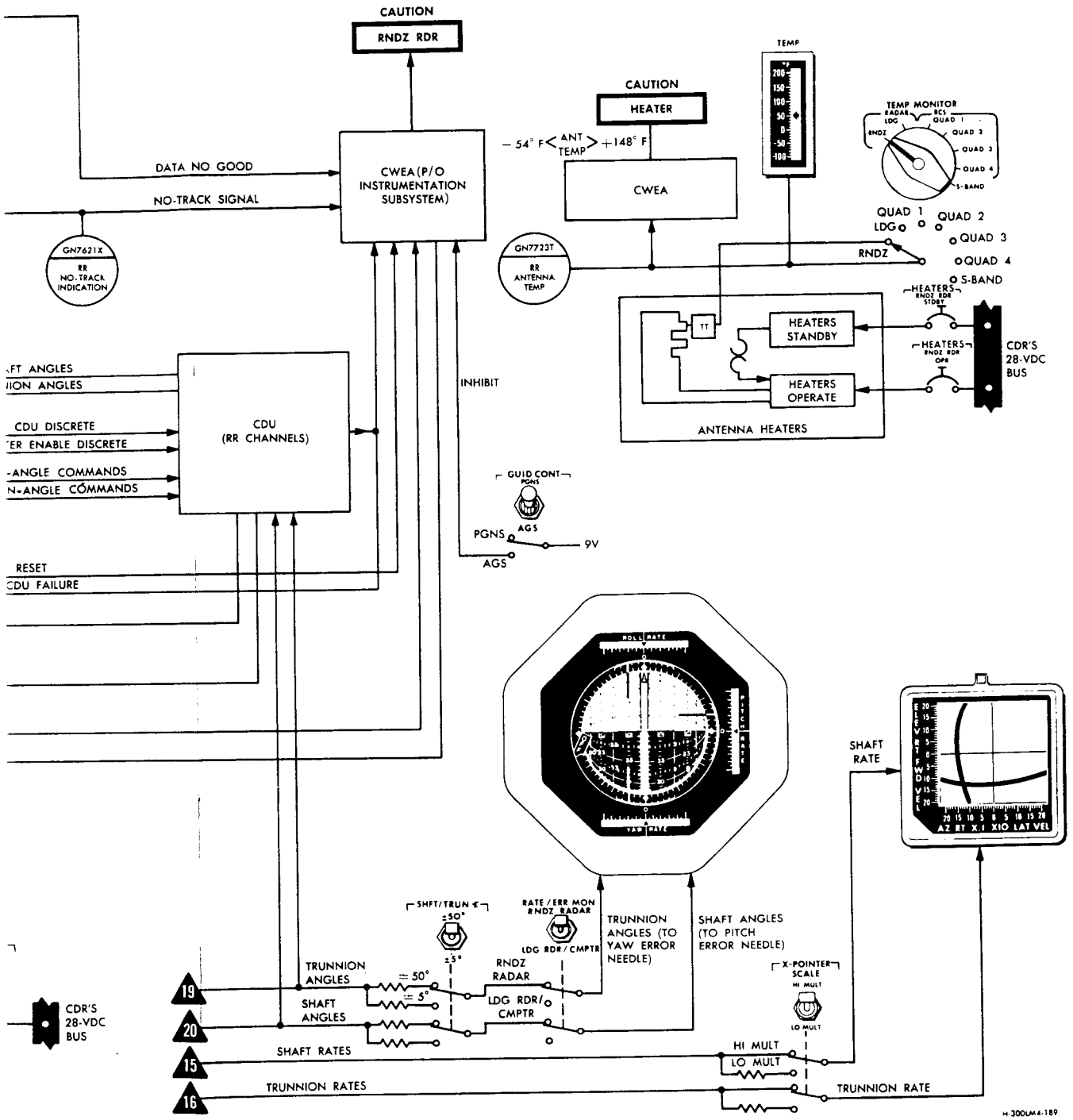

Figure 2.2-4. Rendezvous Radar - Functional Flow Diagram

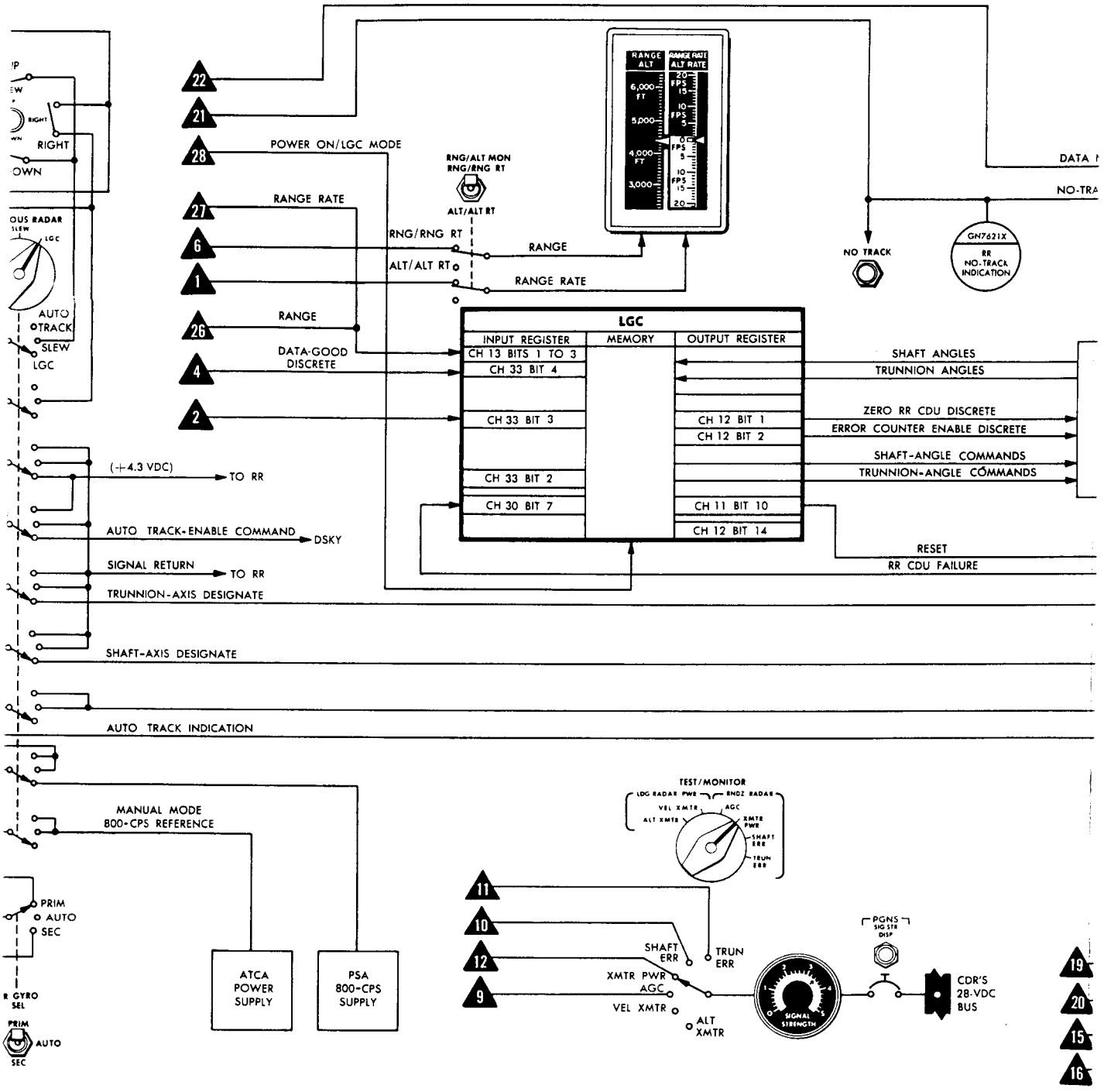
22
21
28
POWER ON/LGC MODE
27
RANGE RATE
6
RNG/RNG RT
1
ALT/ALT RT
26
RANGE
4
DATA-GOOD DISCRETE
2
RNG/ALT MON
RNG/RNG RT
ALT/ALT RT
RANGE
RANGE RATE
RANGE ALT
RANGE RATE ALT RATE
6,000 FT
5,000
4,000 FT
3,000
20 FPS 15
10 FPS 5
0
FPS 5
10 FPS 15
20
NO TRACK
GN7621X
RR NO-TRACK INDICATION
DATA
NO-TRA
LGC
INPUT REGISTER
MEMORY
OUTPUT REGISTER
CH 13 BITS 1 TO 3
CH 33 BIT 4
CH 33 BIT 3
CH 33 BIT 2
CH 30 BIT 7
CH 12 BIT 1
CH 12 BIT 2
CH 11 BIT 10
CH 12 BIT 14
SHAFT ANGLES
TRUNNION ANGLES
ZERO RR CDU DISCRETE
ERROR COUNTER ENABLE DISCRETE
SHAFT-ANGLE COMMANDS
TRUNNION-ANGLE COMMANDS
RESET
RR CDU FAILURE
RIGHT
AUTO TRACK
SLEW
LGC
(+4.3 VDC)
TO RR
AUTO TRACK-ENABLE COMMAND
DSKY
SIGNAL RETURN
TO RR
TRUNNION-AXIS DESIGNATE
SHAFT-AXIS DESIGNATE
AUTO TRACK INDICATION
MANUAL MODE 800-CPS REFERENCE
PRIM
AUTO
SEC
ATCA POWER SUPPLY
PSA 800-CPS SUPPLY
TEST/MONITOR
LDG RADAR PWR
RNDZ RADAR
VEL XMTR
AGC
ALT XMTR
XMTR PWR
SHAFT ERR
TRUN ERR
11
10
12
9
SHAFT ERR
TRUN ERR
XMTR PWR
AGC
VEL XMTR
ALT XMTR
SIGNAL STRENGTH
PGNS SIG STR DISP
CDR'S 28-VDC BUS
19
20
15
16

Missi

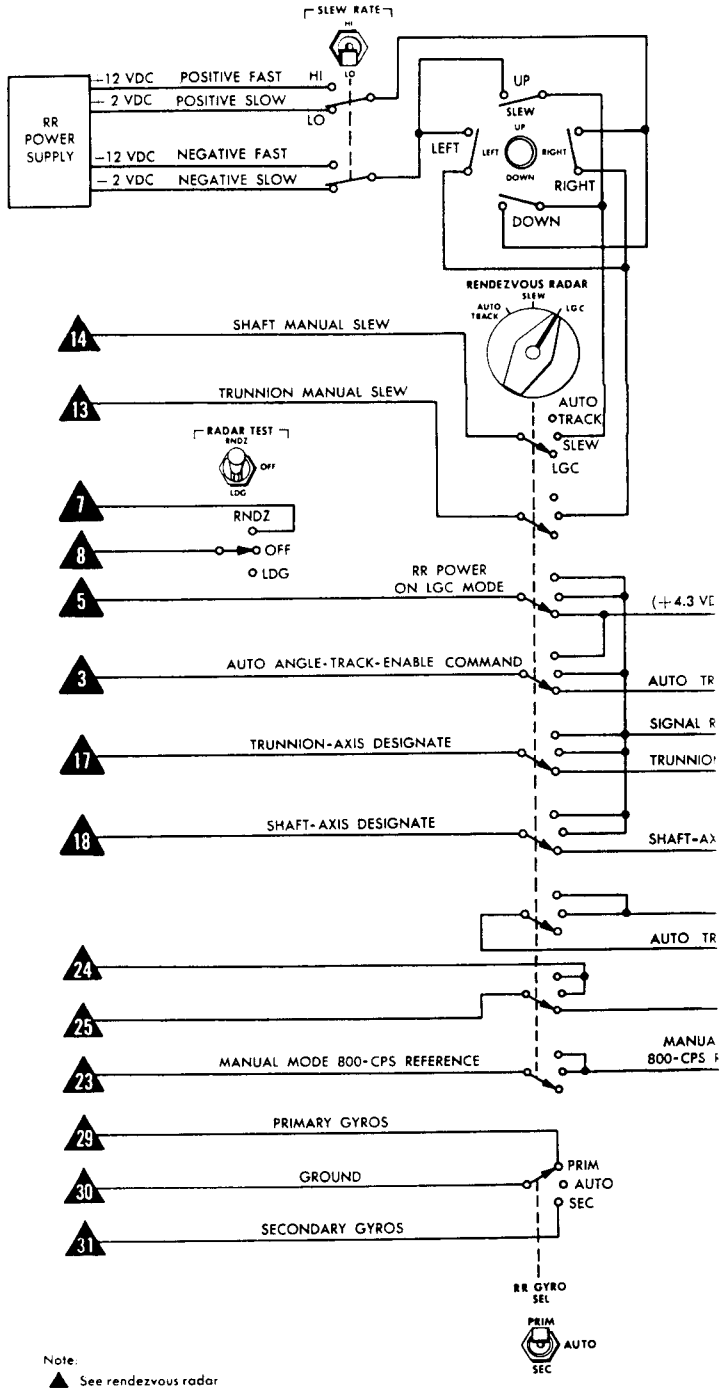

Note:
▲ See rendezvous radar block diagram.

RADA

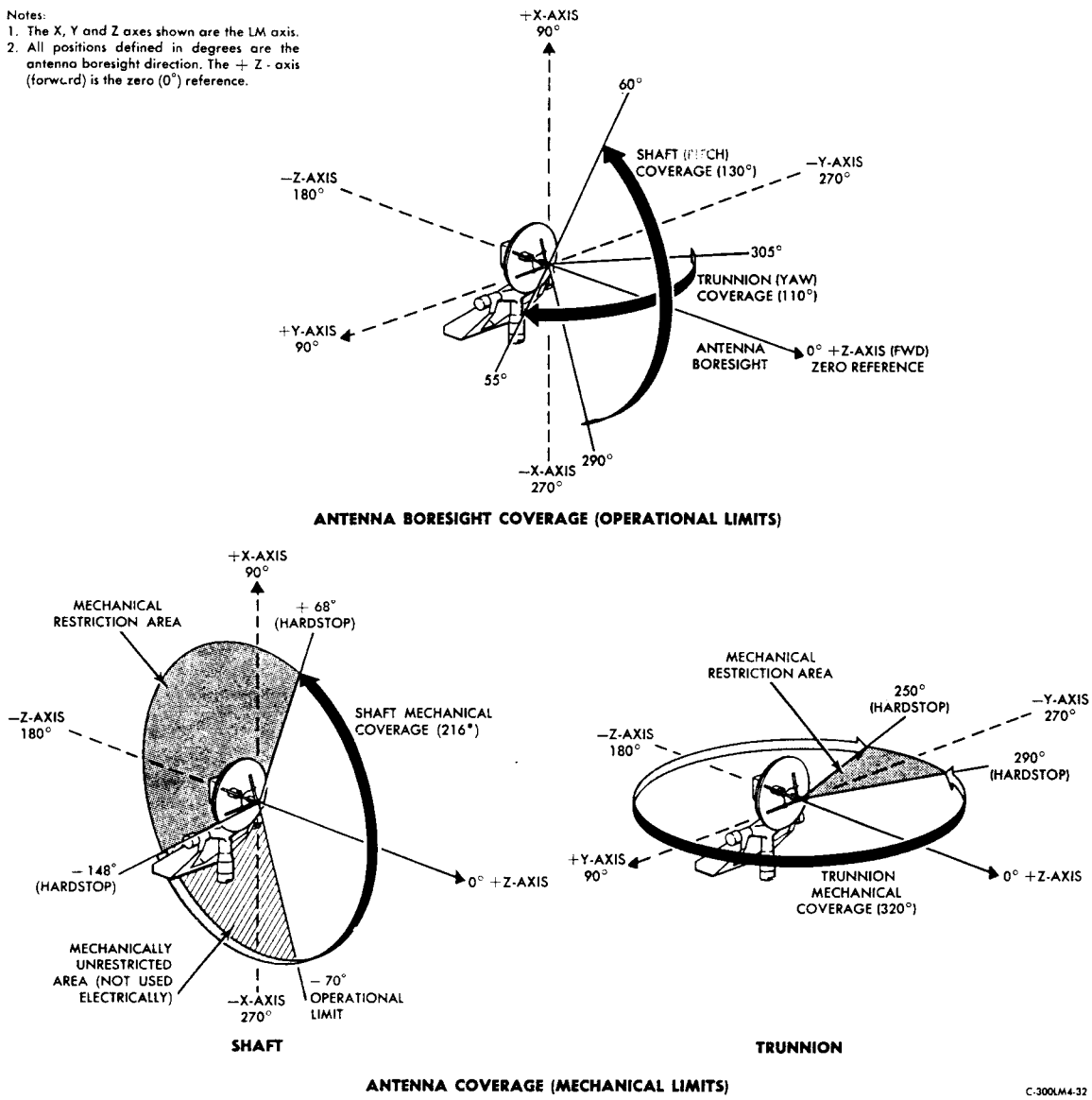

Figure 2.2-5. Rendezvous Radar - Antenna Orientation No. I

The receiver subassembly mixes the 40.8-mc signal generated in the carrier lock loop subassembly, to provide a range tone phase modulated difference frequency of 6.8 mc. This signal is applied to a coherent detector in the tone modulator detector subassembly, along with a 6.8-mc reference signal from a VCO in the carrier lock loop subassembly. Range tones are extracted by coherent demodulation. After the range tones are demodulated, they are filtered, amplified, and sent to a phase modulator in the microwave subassembly. Simultaneously, the phase modulator receives a 9792-mc unmodulated signal derived, by frequency multiplication, from the 6.8-mc reference signal in the carrier lock loop subassembly.

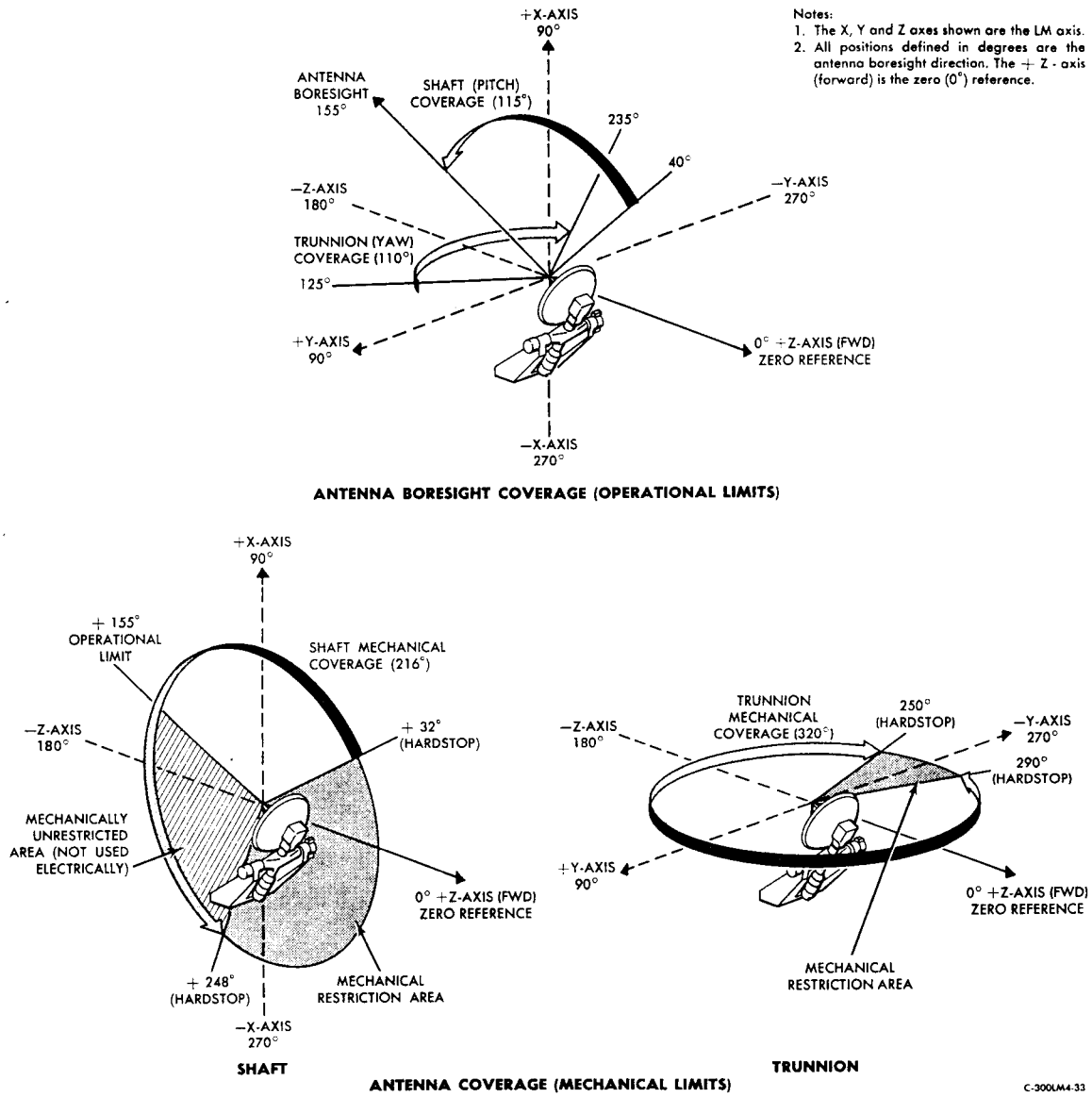

Figure 2.2-6. Rendezvous Radar - Antenna Orientation No. II

The phase modulator of the microwave subassembly modulates the transponder transmitter 9792-mc (plus Doppler) signal with the same range tones, from the tone modulation detector subassembly, that are being demodulated from the received RR signal. The modulated range tones are kept phase-coherent with the range tones of the received RR signal. The transponder phase-modulated transmitter signal goes through a circulator to the antenna, where it is propagated for interception by the RR.

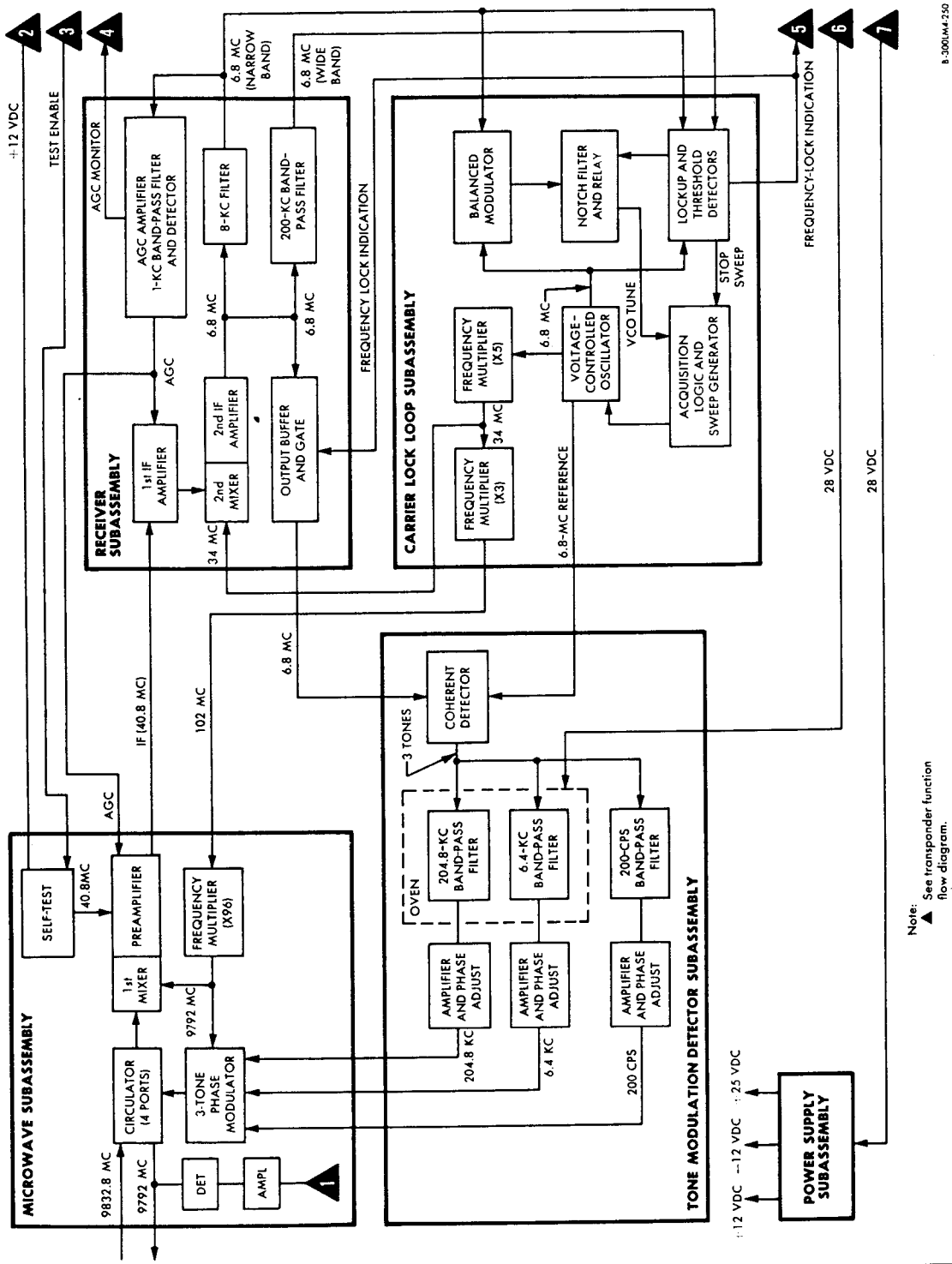

Note:
▲ See transponder function flow diagram.

Figure 2.2-7. Transponder Electronic Assembly - Block Diagram

2.2.3.2.1 Modes of Operation.

The transponder operates in three basic modes: transponder, beacon, and self-test.

Transponder Mode. The transponder operates in this mode while it is receiving RR transmitter signals. In this mode, the transponder provides a continuous-wave, phase-modulated signal whose frequency is 40.8 mc lower than that of the RR-transmitted signal. The transponder phase-modulating tones are the same as the RR phase-modulating tones: 200 cps, 6.4 kc, and 204.8 kc.

Beacon Mode. The transponder is in this acquisition mode when it is operational and no signal is received from the RR. A sweep generator and an acquisition logic portion of the carrier lock loop subassembly cause a frequency sweep scan of ±104 kc about the transponder nominal frequency (9792 mc). When the transponder antenna receives RR-transmitted signals that exceed minimum signal strength, a threshold detector in the carrier lock loop subassembly provides a d-c level to stop the sweep generator and permit tracking.

Self-Test Mode. The self-test mode enables the astronauts to check transponder performance. The self-test mode is initiated by application of an external self-test signal. This test verifies frequency lock-on and AGC response at a simulated 200-nm range. A self-test oscillator (figure 2.2-7) in the microwave subassembly provides a 40.8-mc test signal for the first mixer preamplifier. When the 40.8-mc test signal is applied, the first mixer stage is bypassed. When the self-test mode is not used, the self-test oscillator is deenergized.

2.2.3.2.2 General Operation. (See figure 2.2-8.)

After it is energized and placed in operation, the transponder operates automatically in conjunction with the RR. Transponder turn-on, monitoring and self-test capabilities are provided by the CSM cabin controls and indicators. Figure 2.2-8 shows transponder signal flow through switches and indicators and the location of these switches and indicators in the CSM cabin.

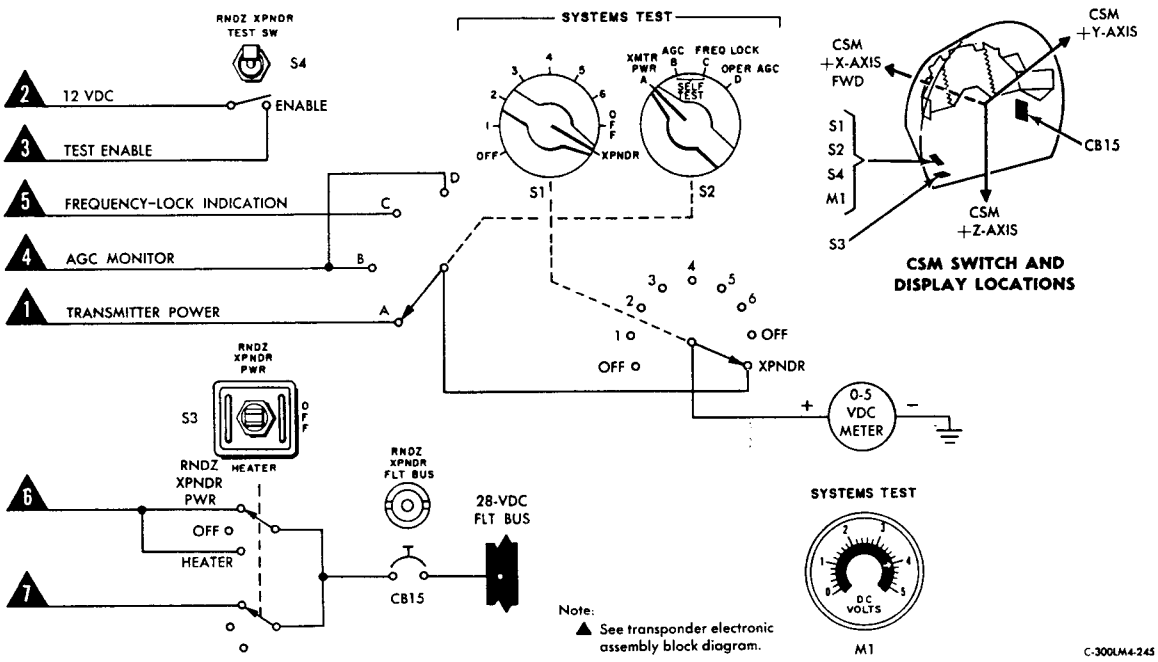

Figure 2.2-8. Transponder - Functional Flow Diagram

To place the transponder in operation, the RNDZ XPNDR FLT BUS circuit breaker is closed, then the RNDZ XPNDR switch is set to HEATER. This action feeds 28 volts dc to the oven in the tone modulation detector subassembly. The oven heats the 204.8- and 6.4-kc band-pass filters to the operating temperature (+160° F). A minimum waiting time of 15 minutes is necessary before the RNDZ XPNDR switch is set to PWR. This waiting time prevents degradation in RR range accuracy due to temperature. With the switch set to PWR, 28 volts dc is routed to the power supply subassembly.

At the output of the microwave assembly, a power monitor provides a d-c readout proportional to transmitter output power. The SYSTEM TEST switches (S1 and S2) and the SYSTEM TEST d-c voltmeter permit monitoring transmitter power, AGC, and frequency lock. The proper d-c voltage readouts for those parameters are:

SYSTEM TEST Switch (S2)	Parameters	D-C Voltage Readout
Position A	Transmitter power	1.0 to 5.0 volts
Position B	AGC	1.0 to 4.5 volts
Position C	Frequency lock	4.0 to 5.0 volts
	Frequency unlocked	0±0.8 volts

The astronauts use the RNDZ XPNDR TEST SW switch to initiate the self-test enable signal for transponder self-test. This signal energizes a self-test oscillator in the microwave subassembly (figure 2.2-7) and bypasses the first mixer stage. The astronauts then verify transponder performance by using the SYSTEM TEST switches and SYSTEM TEST d-c voltmeter to monitor for the proper d-c voltage indications, as designated in the preceding paragraph.

2.2.3.3 Landing Radar. (See figure 2.2-9.)

The LR senses the velocity and slant range of the LM relative to the lunar surface by means of a three-beam Doppler velocity sensor and a radar altimeter. Coordinate velocities are calculated from the measured Doppler shift along three beams of microwave energy, as is the Doppler shift of the radar altimeter beam. The radar altimeter is Doppler corrected and the output slant range is used by the LGC to derive LM altitude from the lunar surface. Slant range is calculated from the frequency deviation difference between the altimeter transmitted and received signals, resulting from the frequency modulation of the transmitted signal and the time delay between the transmitted and received signals. Velocity and range data are made available to the LGC as 15-bit binary words; the nominally forward and lateral velocity data, to the LM displays as d-c analog voltages; and the slant range and vertical velocity (range rate) data, to the LM displays as pulse-repetition frequencies (PRF).

The LR, located in the LM descent stage, consists of an antenna assembly and an electronics assembly. The antenna assembly contains two interlaced phased arrays which transmit four velocity and two altimeter beams. Four broadside arrays receive the reflected energy of the three desired velocity beams and the one desired altimeter beam; there is one broadside array for each desired received radar beam. The electronics assembly searches, tracks, processes, converts, and scales the Doppler and CW/FM returns, which provide the velocity and slant range information for the LGC and the LM controls and displays.

During lunar descent, the LR antenna assembly transmits four velocity beams (10.51 gc) and two altimeter beams (9.58 gc) to the lunar surface. Three separately received velocity beams contain three Doppler velocities with Doppler sign sense. Mixing the received three velocity beams with a portion of the velocity transmitter power, extracts three separate Doppler audio-frequency (AF) spectrum signals (D1, D2, and D3). The Doppler sign sense is preserved by a single sideband mixing technique. The received altimeter beam is compared by mixing with a portion of the altimeter transmitter power to extract a range frequency (FR) with Doppler (D4) and Doppler sign sense. The Doppler is subtracted later, leaving Doppler-compensated range frequency. The altimeter receiver is blanked during the transmit and receive times of modulator flyback. The LM altitude is derived from the Doppler-compensated range frequency.

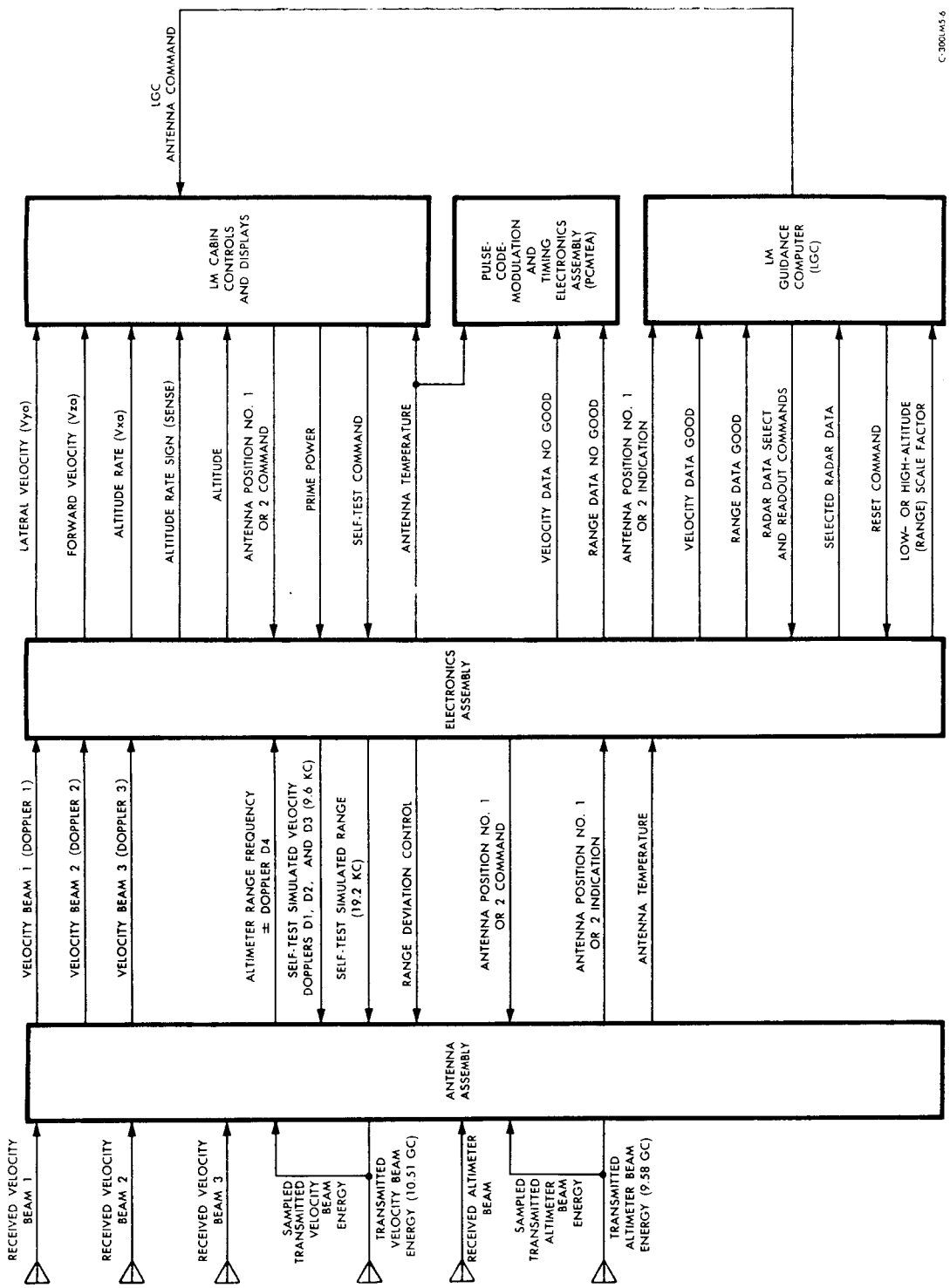

Figure 2.2-9. Landing Radar - Simplified Block Diagram

In the acquisition mode, frequency trackers in the electronics assembly use 1,200-cps, low-pass filters to scan wide-band, AF spectrum signals (D1, D2, D3, and D4) for four separate narrow-band spectrums. These spectrums correspond to the frequency power spectrums along the centers of the received velocity and altimeter beams. When each of the frequency trackers acquire these narrow-band Doppler and altimeter frequencies, they go into the tracking mode and the LGC receives velocity and range data-good discretes.

By adding and scaling in accordance with antenna coordinate velocity formulas, the velocity data computers within the electronics assembly compute the antenna coordinate velocities (Vxa, Vya, and Vza) from the Doppler frequencies on the three returning velocity beams. The term Vxa represents altitude rate or vertical velocity; Vya, lateral velocity; and Vza, approximate forward velocity.

When all Doppler velocity frequency trackers are locked to the discrete Doppler frequencies on the three returning velocity beams, D1, D2, and D3, velocity data good occurs and the antenna coordinate velocities, in PRF form, are gated to the signal data converter. The lateral and forward velocities (Vya and Vza, respectively) are now also available to the X-pointer indicator (panels 1 and 2) as d-c analog voltages. The altitude rate (Vxa) is now also available to the ALT RATE indicator as a PRF. By use of radar-data select commands and a readout command, the LGC supplies the PRF counting periods and causes the signal data converter to shift out, in sequence, the Vxa, Vya, Vza, and range data as separate 15-bit serial binary words.

When LM altitude drops to 2,500 feet or less, the electronics assembly frequency trackers switch to narrow-band filters for tracking. An altitude mode control signal increases the frequency-deviation rate of the transmitted altimeter signal (9.58 gc) from ±4 mc to ±20 mc. A low-altitude PRF (range frequency) is gated to the ALT indicator and a low-altitude scale factor discrete is sent to the LGC. Using the LDG ANT switch on panel 3, the antenna can be manually positioned to antenna position No. 1 (descent) or antenna position No. 2 (hover). With the switch set to AUTO, the LGC automatically commands the antenna to antenna position No. 2 when the LM goes through a pitch-up maneuver at an altitude of about 7500 feet.

Antenna temperature, altimeter and velocity sensor power, and other parameters are monitored with LM displays. A LR self-test is initiated with a LM control. The self-test command enables simulated velocity Dopplers (9.6 kc) and simulated range (19.2 kc). Correct LR performance is then determined from the correct LR output values of slant range and coordinate velocities, as monitored on LM displays and via the LGC input.

2.2.3.3.1 Signal Processing. (See figure 2.2-10.)

The LR extracts the positive and negative Doppler shifts from the returning velocity beams and the range frequency ± Doppler from the returning altimeter beam. The LR processes the beam Doppler shifts (D1, D2, and D3) to derive the LR antenna coordinate velocities (Vxa, Vya, and Vza) data. In processing the range frequency ± Doppler, the LR compensates for the ± Doppler. These velocity and range (altitude) data are made available to the LGC as 15-bit serial binary words; the velocity data, to the LM displays as d-c analog voltages; and the range rate data, to the LM displays as PRF. The slant range to the indicator is scaled by cos 15° to give nearly true LM-to-lunar-surface altitude when the LR antenna is in position No. 2 (hover).

In the antenna assembly, the velocity sensor oscillator multiplier (VSOM) generates a 109.479-mc signal, which is multiplied by 96 and power-amplified to produce the 10.51-gc velocity beam (200 milliwatts minimum) that is propagated by a multiple-waveguide phased array to the lunar surface. Three separate broadside arrays receive three reflected velocity beams, each conveying a positive or negative Doppler shift. The received Doppler (F1±D1) is mixed at the balanced mixer with a continuously sampled, transmitted fundamental frequency (F1) to extract the AF Doppler shift with Doppler sign sense. At the balanced mixer output, a quadrature pair retains the Doppler sign sense of the returned velocity-beam signal by a single sideband technique by having one path at 0° reference with respect to the other path (±90°). When there is a closing Doppler velocity, the ±90° path leads the 0° reference path by +90°. At the balanced mixer outputs, AF Doppler shifts with Doppler sign sense are proportional to the opening or closing velocity between the LM and the lunar surface along the centers of the velocity beams.

The oscillator/modulator and altimeter transmitter multiplier develops the 9.58-gc frequency-modulated altimeter beam (175 milliwatts minimum) that is propagated to the lunar surface by a multiple-waveguide phased array. The altimeter broadside array receives the reflected altimeter beam. At a balanced mixer, the received signal is compared with a sampled transmitted signal to obtain the frequency difference. This frequency difference without Doppler is proportional to the time difference between transmitted and received signals due to a sawtooth frequency modulation on the transmitter. The slant range is derived from this time difference. The range converter cancels the undesired Doppler, leaving Doppler-compensated range frequency PRF as a tracker output.

The three velocity Doppler shifts (D1, D2, and D3) with Doppler sign sense, and the altimeter range frequency with Doppler (D4) and Doppler sign sense, are applied to dual AF amplifiers. At relatively high altitudes, the dual AF amplifiers provide 88-db gain. When signal strength becomes excessive, usually due to low altitudes, the 33-db gain amplifiers are switched out and the frequency trackers only receive signals with 55-db gain.

Each Doppler velocity sensor (DVS) frequency tracker acquires and then tracks AF Doppler frequencies to obtain an average Doppler frequency corresponding to a Doppler shift at the velocity beam power spectrum center. The Doppler-shift frequency is superimposed on a 614.4-kc subcarrier for processing by a velocity data converter. Each frequency tracker functions in an acquisition loop or a tracking loop. The acquisition loop sweeps the tracking loop to within its acquisition (pull-in) capability. When the Doppler signal plus noise (S+N) exceeds the out-of-band noise factor (N) by 3 db, the frequency tracker locks on to a narrow band of Doppler frequencies corresponding to the velocity beam center. It also provides a tracker lock-on (TL) signal to determine LR operational status. The tracking loop, basically a narrow-band AFC circuit, smoothes and tracks the Doppler-shift frequency corresponding to the Doppler power spectrum at the velocity beam center. Doppler sign sense is retained and the frequency tracker output is a pure sinusoid, at 614.4 kc ± Doppler offset frequency (FC±D1), (FC±D2), and (FC±D3). When the Doppler velocity frequency trackers achieve tracker lock-on, tracker lock-on discretes enable a velocity data-good (VDG) LR output discrete. When any velocity frequency tracker is not locked on, a velocity data-no-good (VDNG) LR output discrete is enabled. When the range frequency tracker is not locked on to the frequency shift of the returned altimeter beam, or when either of the velocity beams needed for altimeter doppler correction is not locked on, the range data good (RDG) discrete is disabled, and the range data-no-good (RDNG) LR output discrete is enabled.

A frequency tracker may have a false tracker lock-on due to locking on a minor lobe of another beam. This condition is referred to as cross-lobe lock-on. The astronauts determine whether the LR data displayed are authentic by comparing these data with expected values. The LGC also conducts a reasonableness test on all incoming LR data. In both cases, the LR data consists of LM altitude and velocity components: forward velocity (Vza), lateral velocity (Vya), and altitude rate (Vxa). If the LGC reasonableness test fails, an LGC alarm notifies the astronauts. An astronaut can force the frequency trackers back into the acquisition loop (forced search) by setting the RADAR TEST switch to LDG for 2 seconds. In forced search, all trackers are forced to perform a search sweep, after which they reacquire their respective spectrums.

From the DVS frequency trackers, each Doppler offset frequency is applied to a converter in the velocity data (VD) converter subassembly. From the Doppler offset frequency, the converter removes the subcarrier (center frequency), synchronizes and multiplies the Doppler offset frequency by four to retain the quadrature phases, indicates Doppler sign sense and, based on Doppler sign sense, provides an output to computers within the VD computer subassembly. From each converter output, a Doppler signal ($4D<0$ or $4D>0$) goes to the computers within the VD computer subassembly. The notation $4D>0$ means four times Doppler offset frequency with positive Doppler (closing velocity); the notation $4D<0$, four times Doppler offset frequency with negative Doppler (opening velocity).

When a frequency tracker output becomes less than 1.47 kc (Doppler frequency), a bandwidth control circuit switches the frequency tracker to its narrow band-pass frequency operation (tracking) by switching the low-pass filters from 1200 cps to 500 cps. When an altitude mode control discrete indicates a slant range less than 2,500 feet, the altimeter scale factor is increased by a factor of five and the bandwidth control circuits switch all the frequency trackers to their narrow band-pass frequency operation. The altimeter scale factor and the frequency trackers are switched again into their high altitude mode of operation if the LR slant range exceeds 2,800 feet.

From the $4D<0$ and $4D>0$ signals, VD computers obtain the velocity beam Doppler products (D1, D2, and D3) with Doppler sign sense. The computers convert these Doppler products into antenna

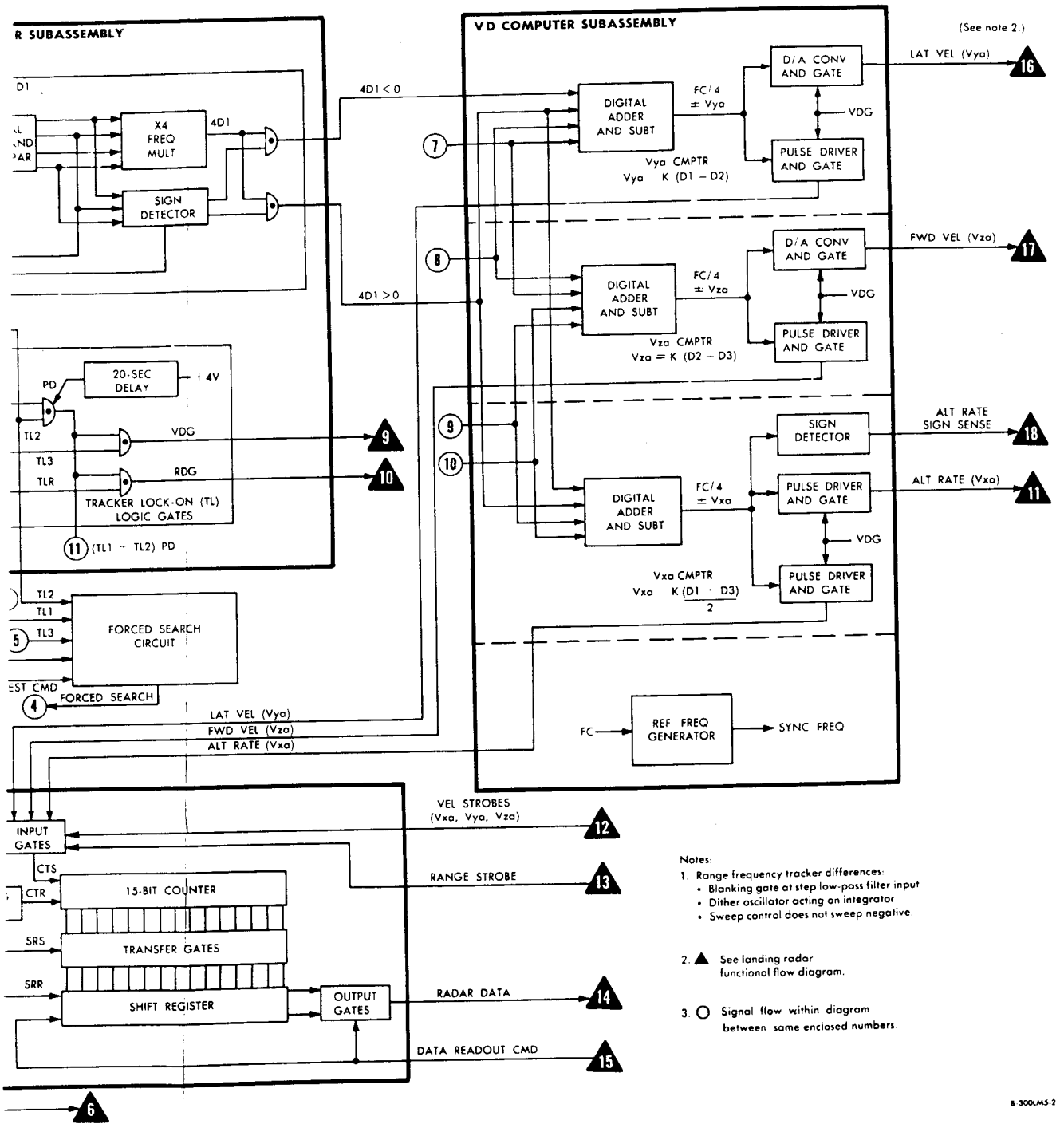

Figure 2.2-10. Landing Radar - Block Diagram

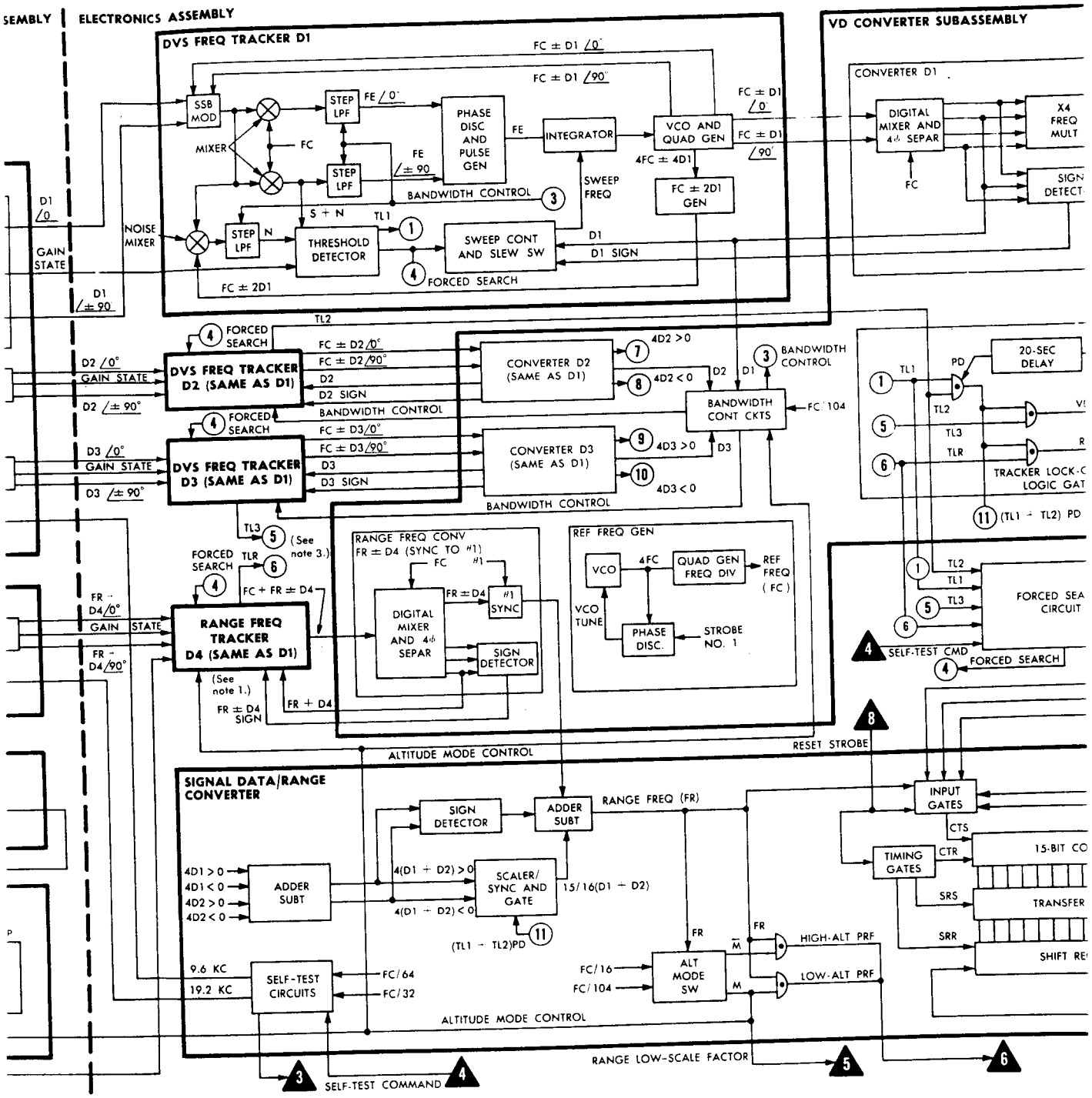
SEMBLY
ELECTRONICS ASSEMBLY
DVS FREQ TRACKER D1
VD CONVERTER SUBASSEMBLY
CONVERTER D1
SSB MOD
MIXER
STEP LPF
PHASE DISC AND PULSE GEN
INTEGRATOR
VCO AND QUAD GEN
FC ± D1 /0°
FC ± D1 /90°
FE /0°
FE /± 90
FE
FC
4FC ± 4D1
FC ± 2D1 GEN
SWEEP FREQ
BANDWIDTH CONTROL
S + N
TL1
N
THRESHOLD DETECTOR
SWEEP CONT AND SLEW SW
D1
D1 SIGN
FORCED SEARCH
FC ± 2D1
NOISE MIXER
GAIN STATE
D1 /0
D1 /± 90
DIGITAL MIXER AND 4th SEPAR
X4 FREQ MULT
SIGN DETECT
TL2
DVS FREQ TRACKER D2 (SAME AS D1)
D2 /0°
D2 /± 90°
FC ± D2 /0°
FC ± D2 /90°
D2
D2 SIGN
CONVERTER D2 (SAME AS D1)
4D2 > 0
4D2 < 0
BANDWIDTH CONTROL
BANDWIDTH CONT CKTS
FC/104
DVS FREQ TRACKER D3 (SAME AS D1)
D3 /0°
D3 /± 90°
FC ± D3/0°
FC ± D3/90°
D3
D3 SIGN
CONVERTER D3 (SAME AS D1)
4D3 > 0
4D3 < 0
20-SEC DELAY
PD
TL1
TL2
TL3
TLR
TRACKER LOCK-O LOGIC GAT
(TL1 + TL2) PD
(See note 3.)
FORCED SEARCH
TLR
FC + FR ± D4
RANGE FREQ TRACKER D4 (SAME AS D1)
FR + D4/0°
FR + D4/90°
(See note 1.)
FR ± D4 SIGN
FR + D4
RANGE FREQ CONV
FR ± D4 (SYNC TO #1)
FC
#1
FR ± D4
#1 SYNC
DIGITAL MIXER AND 4th SEPAR
SIGN DETECTOR
REF FREQ GEN
VCO
4FC
QUAD GEN FREQ DIV
REF FREQ (FC)
VCO TUNE
PHASE DISC.
STROBE NO. 1
FORCED SEA CIRCUIT
SELF-TEST CMD
FORCED SEARCH
ALTITUDE MODE CONTROL
RESET STROBE
SIGNAL DATA/RANGE CONVERTER
SIGN DETECTOR
ADDER SUBT
RANGE FREQ (FR)
INPUT GATES
CTS
TIMING GATES
CTR
15-BIT CO
SRS
TRANSFER
SRR
SHIFT RE
4D1 > 0
4D1 < 0
4D2 > 0
4D2 < 0
ADDER SUBT
4(D1 + D2) > 0
4(D1 + D2) < 0
SCALER/ SYNC AND GATE
15/16(D1 + D2)
(TL1 + TL2)PD
FR
HIGH-ALT PRF
LOW-ALT PRF
FC/16
FC/104
ALT MODE SW
M
9.6 KC
19.2 KC
SELF-TEST CIRCUITS
FC/64
FC/32
ALTITUDE MODE CONTROL
RANGE LOW-SCALE FACTOR
SELF-TEST COMMAND

Mis

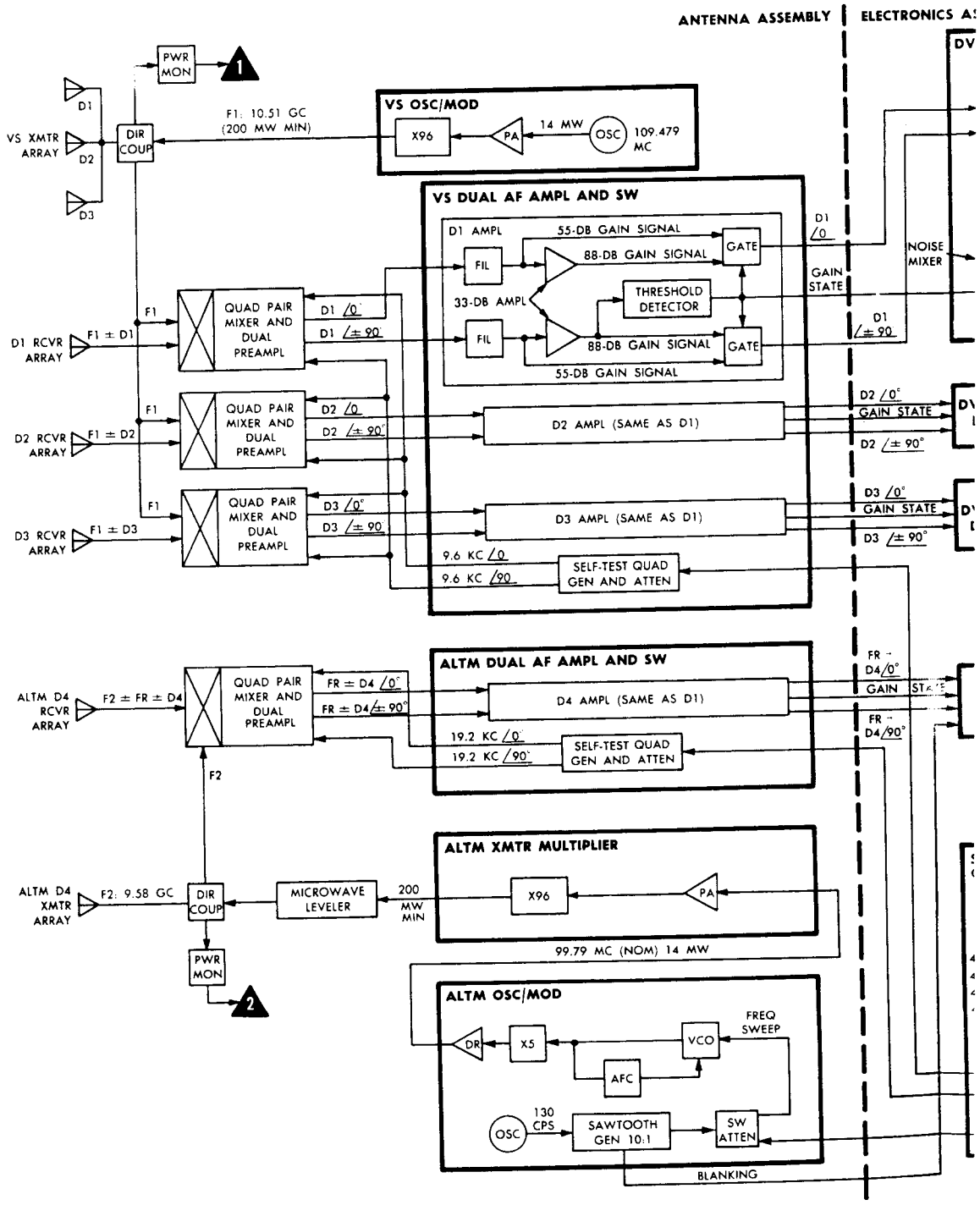
ANTENNA ASSEMBLY
ELECTRONICS A
PWR MON
1
D1
VS XMTR ARRAY
D2
D3
DIR COUP
F1: 10.51 GC (200 MW MIN)
VS OSC/MOD
X96
PA
14 MW
OSC
109.479 MC
VS DUAL AF AMPL AND SW
D1 AMPL
55-DB GAIN SIGNAL
88-DB GAIN SIGNAL
GATE
FIL
33-DB AMPL
THRESHOLD DETECTOR
88-DB GAIN SIGNAL
GATE
55-DB GAIN SIGNAL
D1 /0
GAIN STATE
D1 /± 90
NOISE MIXER
F1
D1 RCVR ARRAY
F1 ± D1
QUAD PAIR MIXER AND DUAL PREAMPL
D1 /0
D1 /± 90
D2 RCVR ARRAY
F1 ± D2
D2 /0
D2 /± 90
D2 AMPL (SAME AS D1)
D2 /0°
GAIN STATE
D2 /± 90°
D3 RCVR ARRAY
F1 ± D3
D3 /0°
D3 /± 90
D3 AMPL (SAME AS D1)
D3 /0°
GAIN STATE
D3 /± 90°
9.6 KC /0
9.6 KC /90
SELF-TEST QUAD GEN AND ATTEN
ALTM DUAL AF AMPL AND SW
ALTM D4 RCVR ARRAY
F2 ± FR ± D4
FR ± D4 /0°
FR ± D4 /± 90°
D4 AMPL (SAME AS D1)
FR → D4/0°
GAIN
FR → D4/90°
19.2 KC /0
19.2 KC /90
SELF-TEST QUAD GEN AND ATTEN
F2
ALTM XMTR MULTIPLIER
ALTM D4 XMTR ARRAY
F2: 9.58 GC
DIR COUP
MICROWAVE LEVELER
200 MW MIN
X96
PA
99.79 MC (NOM) 14 MW
PWR MON
2
ALTM OSC/MOD
DR
X5
VCO
FREQ SWEEP
AFC
OSC
130 CPS
SAWTOOTH GEN 10:1
SW ATTEN
BLANKING

coordinates velocities Vxa, Vya, and Vza. With the velocity frequency trackers locked on, the VDG discretes gate the lateral (Vya) and forward (Vza) velocities, in d-c voltage form, to the X-pointer indicators; the altitude rate (Vxa), as a PRF with altitude rate sign sense, to the ALT RATE indicator. The altitude rate sign sense conveys positive or negative Doppler velocity. The VDG discretes also gate the Vxa, Vya, and Vza, as PRF, to the signal data circuits of the signal data/range converter subassembly.

From the range frequency converter output, the altimeter beam (D4) frequency is applied to range converter circuits of the signal data/range converter subassembly. When discretes TL1 and TL2 are present, these circuits use the computed PRF Doppler along D4 to cancel the Doppler, leaving Doppler-compensated range frequency as a PRF. The range converter circuits derive the Doppler along D4 by adding the Doppler frequencies D1 and D2 and dividing them by two, then multiplying the resultant average by 15/16 because the altimeter and velocity transmitter frequencies (and thereby their Doppler frequencies for any given velocity) are in a ratio of 15/16.

2.2.3.3.2 General Operation. (See figure 2.2-11.)

Using the LM controls and indicators, the astronauts can monitor the LM velocities, LM altitude, and LR transmitter power and temperature; apply power to heat the antenna and power to the LR; initiate LR self-test; and place the antenna in position No. 1 (descent) or 2 (hover). The LR self-test permits operational checks of the LR without radar returns from external sources.

The HEATERS: LDG RDR circuit breaker (panel 11) is closed at the launch pad and left closed for the mission duration. This circuit breaker activates an antenna temperature control, which applies power to antenna heaters to protect antenna components against the spatial cold when power is not applied to the LR. Closing the PGNS: LDG RDR circuit breaker applies power to the LR power supply and removes heater power from the antenna. The activated LR furnishes the antenna with 30 watts minimum of dissipated power.

The LR is first turned on and self-tested for 5 minutes during LM checkout before separation from the CSM. The self-test is accomplished by activating the LR with the PGNS: LDG RDR circuit breaker, waiting 2 minutes for adequate warmup, and setting the RADAR TEST switch on panel 3 to LDG. A self-test command activates self-test circuits, which apply simulated Doppler signals (9.6 kc) to the LR velocity sensors and simulated lunar range signals (19.2 kc) to the altimeter sensor. After processing by the antenna and electronics assemblies, these simulated self-test signals are monitored for expected LM simulated forward and lateral velocities, with the X-pointer indicators, and for expected LM simulated altitude and altitude rate, with the ALT and ALT RATE indicators. The self-test values are also at the LGC input and that interface is checked on DSKY display by inputing suitable verbs and nouns.

To monitor the LM simulated forward and lateral velocities with the X-pointer indicator on panel 1, switches on panel 1 are set to the following positions: MODE SEL to LDG RADAR, RATE/ERR MON to LDG RDR/CMPTR, and X-POINTER SCALE to HI MULT or LO MULT. The HI MULT position provides a 200-fps scale and lights the X10 multiplier placard on the X-pointer indicator. The LO MULT position provides a 20-fps scale. To monitor altitude and altitude rate, the RNG/ALT MON switch on panel 1 is set to ALT/ALT/RT and the MODE SEL switch is left at LDG RADAR.

Altimeter transmitter and velocity transmitter power is monitored by setting the TEST/MONITOR selector switch to ALT XMTR and VEL XMTR and observing the SIGNAL STRENGTH meter. A half-scale reading indicates an acceptable minimum power-output level. LR antenna temperature is monitored by setting the TEMP MONITOR selector switch to LDG and observing the TEMP indicator for an indication within the operating temperature range of +50° to +150°F.

If the range frequency tracker fails to lock on, the velocity data-no-good or range data-no-good discrete are sent to the PCMTEA and are telemetered to MSFN. Antenna temperature data are also telemetered.

After a successful LR self-test, the LR is deactivated and the RADAR TEST switch is set to OFF. The LR is placed in operation a few minutes prior to powered descent and remains operational until lunar touchdown.

LR slant range data is available to the LGC and on the ALT indicator at or above 25,000 feet. At or above 18,000 feet, the forward (Vza) and lateral (Vxa) velocities are available to the LGC and on the X-pointer indicators.

When the LM reaches an altitude of 500 feet or less, the astronauts initiate manual control (P66) for the remainder of the descent to the lunar surface. The LR may drop lock during this phase of the mission, due to a zero Doppler. At a preselected minimum altitude (usually 50 feet), LR data to the LGC is inhibited. During this critical phase of the mission, the altitude and velocity data on the LM displays is inertially derived by the LGC from the state vector which has been updated by LR data.

LR raw data can be displayed as a cross-check and/or if a problem occurs in the PGNS coordinate transformation. When touchdown is accomplished, the LR is deactivated by opening all LR circuit breakers.

2.2.3.3.3 Antenna Positions.

The LR antenna is oriented to position No. 1 (descent) or 2 (hover). Position No. 1 orients the antenna boresight 24° with respect to the LM X-axis. In position No. 2, the antenna boresight is parallel to the LM X-axis. The antenna pivots on its Y-axis which is at a 6° angle with respect to the LM Y-axis. The angle between the antenna boresight and the altimeter beam is 20.4°. (See figure 2.2-12.)

In the nominal mission, the LDG ANT switch (panel 3) is set to AUTO and the LGC controls the antenna position. For test or override purposes, the LR antenna position may be controlled manually. Antenna position No. 1 is selected by setting the LDG ANT switch to DES; antenna position No. 2, with the switch set to HOVER. With the switch set to AUTO, the LGC commands the antenna to position No. 2 at the LM pitchover point on the descent trajectory, at about 7,800 feet.

The LR antenna position command energizes a DSKY relay solenoid, thereby applying an antenna position No. 2 discrete to a pedestal motor switch, which switches a pedestal motor driver to the position No. 2 activate command line. From the antenna pedestal motor driver, a current-amplified signal is routed through a closed cam-limit switch to drive the tilt-actuator motor. The driven motor tilts the LR antenna to position No. 2.

When the antenna reaches either position, a cam mechanism cuts off the motor drive signal by opening that positions activate command switch. In addition, the drive signal now causes a closed circuit to exist across the motors armature, acting as a dynamic brake. In either antenna position limit, only a drive signal out of that position is accepted by the circuit set up by the limit switch contacts. In addition, either position causes an indication discrete to be sent to the LGC, which uses this discrete to transform radar data into inertial coordinates for guidance computations.

The pedestal motor is controlled in the same way by the limit switches when the LR antenna is commanded manually by setting the LDG ANT switch to DES or HOVER.

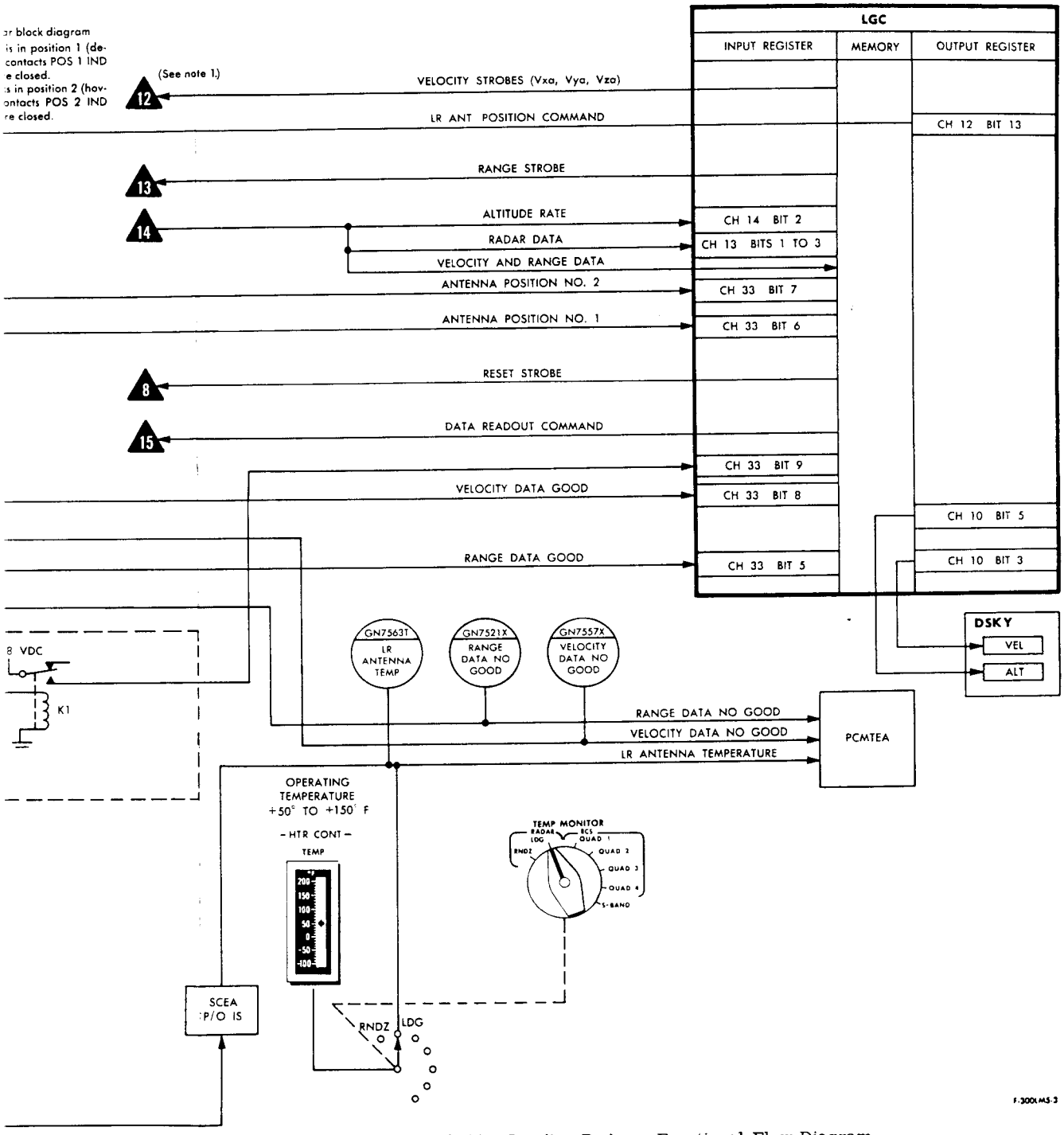

Figure 2.2-11. Landing Radar - Functional Flow Diagram

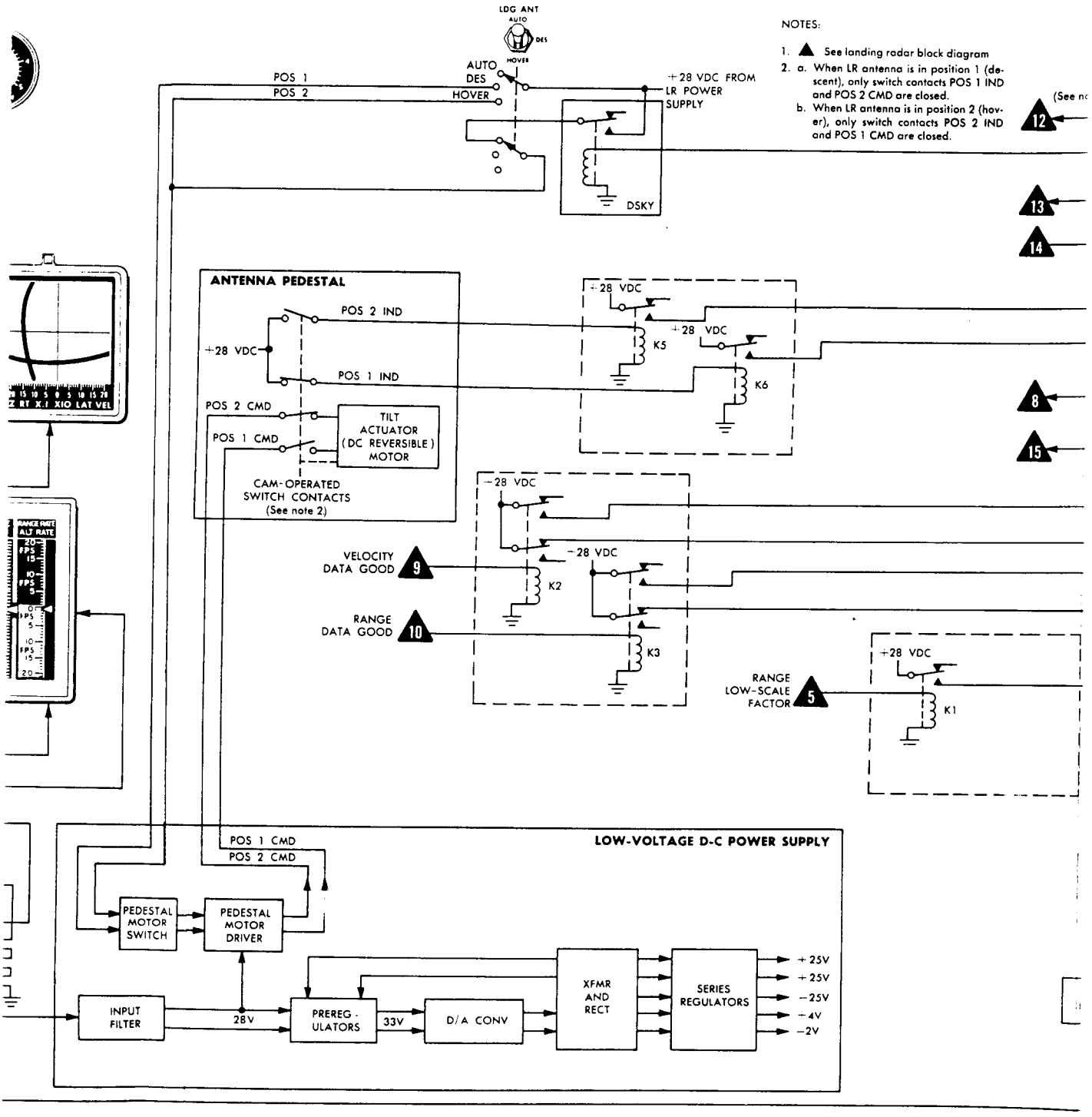
LDG ANT
AUTO
DES
HOVER
AUTO
DES
HOVER
POS 1
POS 2
+28 VDC FROM
LR POWER
SUPPLY
DSKY
NOTES:
1. ▲ See landing radar block diagram
2. a. When LR antenna is in position 1 (descent), only switch contacts POS 1 IND and POS 2 CMD are closed.
b. When LR antenna is in position 2 (hover), only switch contacts POS 2 IND and POS 1 CMD are closed.
(See no
12
13
14
8
15
ANTENNA PEDESTAL
POS 2 IND
+28 VDC
POS 1 IND
POS 2 CMD
POS 1 CMD
TILT
ACTUATOR
(DC REVERSIBLE)
MOTOR
CAM-OPERATED
SWITCH CONTACTS
(See note 2)
+28 VDC
K5
+28 VDC
K6
−28 VDC
VELOCITY
DATA GOOD
9
K2
−28 VDC
RANGE
DATA GOOD
10
K3
+28 VDC
RANGE
LOW-SCALE
FACTOR
5
K1
LOW-VOLTAGE D-C POWER SUPPLY
POS 1 CMD
POS 2 CMD
PEDESTAL
MOTOR
SWITCH
PEDESTAL
MOTOR
DRIVER
INPUT
FILTER
28V
PREREG-
ULATORS
33V
D/A CONV
XFMR
AND
RECT
SERIES
REGULATORS
+25V
+25V
−25V
+4V
−2V

M ssi

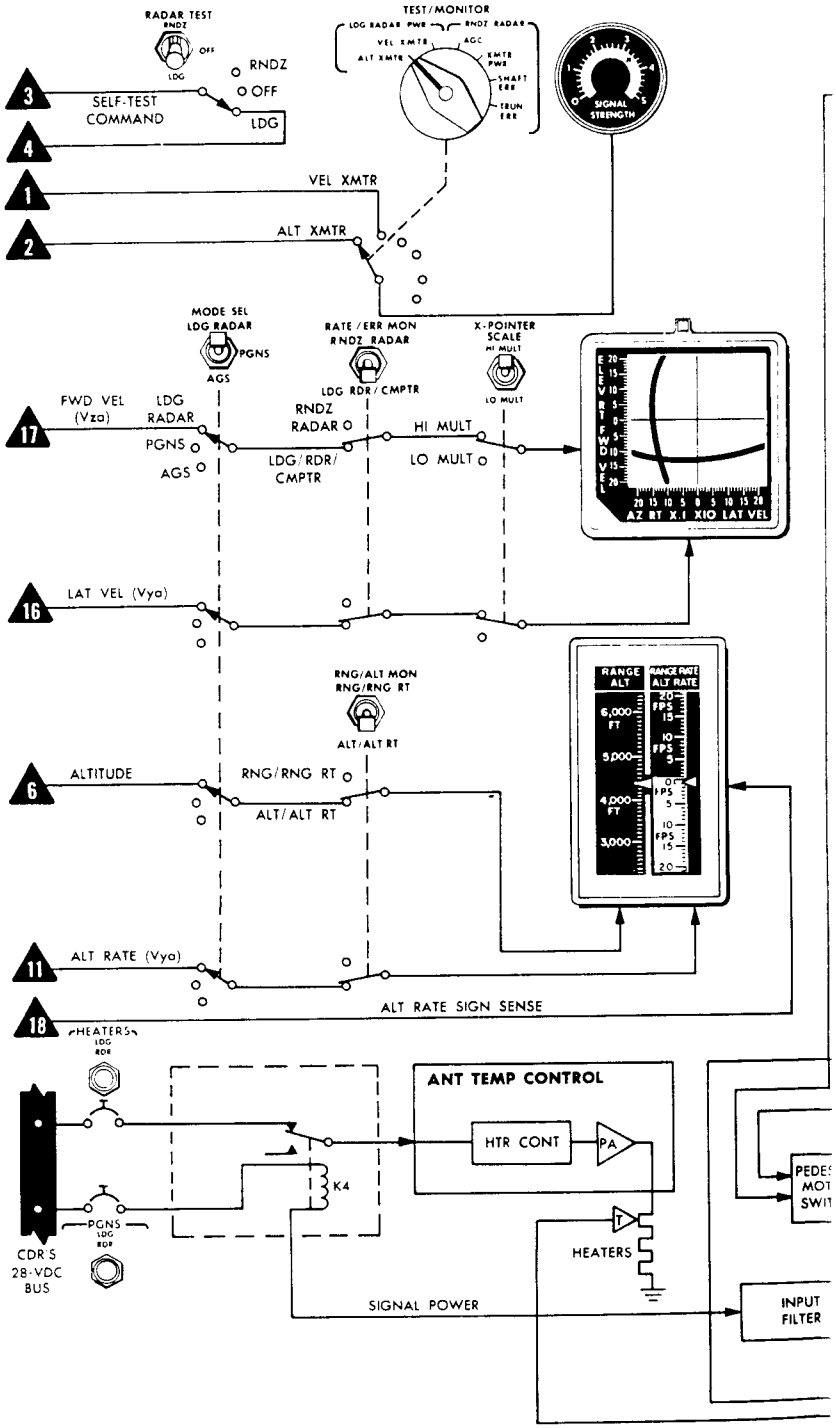
RADAR TEST
RNDZ
OFF
LDG
RNDZ
OFF
LDG
SELF-TEST COMMAND
TEST/MONITOR
LDG RADAR PWR
RNDZ RADAR
VEL XMTR
AGC
ALT XMTR
XMTR PWR
SHAFT ERR
TRUN ERR
SIGNAL STRENGTH
VEL XMTR
ALT XMTR
MODE SEL
LDG RADAR
PGNS
AGS
RATE/ERR MON
RNDZ RADAR
LDG RDR/CMPTR
X-POINTER SCALE
HI MULT
LO MULT
FWD VEL (Vza)
LDG RADAR
PGNS
AGS
RNDZ RADAR
LDG/RDR/CMPTR
HI MULT
LO MULT
AZ RT X.1 XIO LAT VEL
LAT VEL (Vya)
RNG/ALT MON
RNG/RNG RT
ALT/ALT RT
ALTITUDE
RNG/RNG RT
ALT/ALT RT
RANGE ALT
RANGE RATE ALT RATE
6,000 FT
5,000
4,000 FT
3,000
ALT RATE (Vya)
ALT RATE SIGN SENSE
HEATERS
LDG RDR
PGNS
LDG RDR
CDR'S 28-VDC BUS
K4
ANT TEMP CONTROL
HTR CONT
PA
HEATERS
SIGNAL POWER
INPUT FILTER

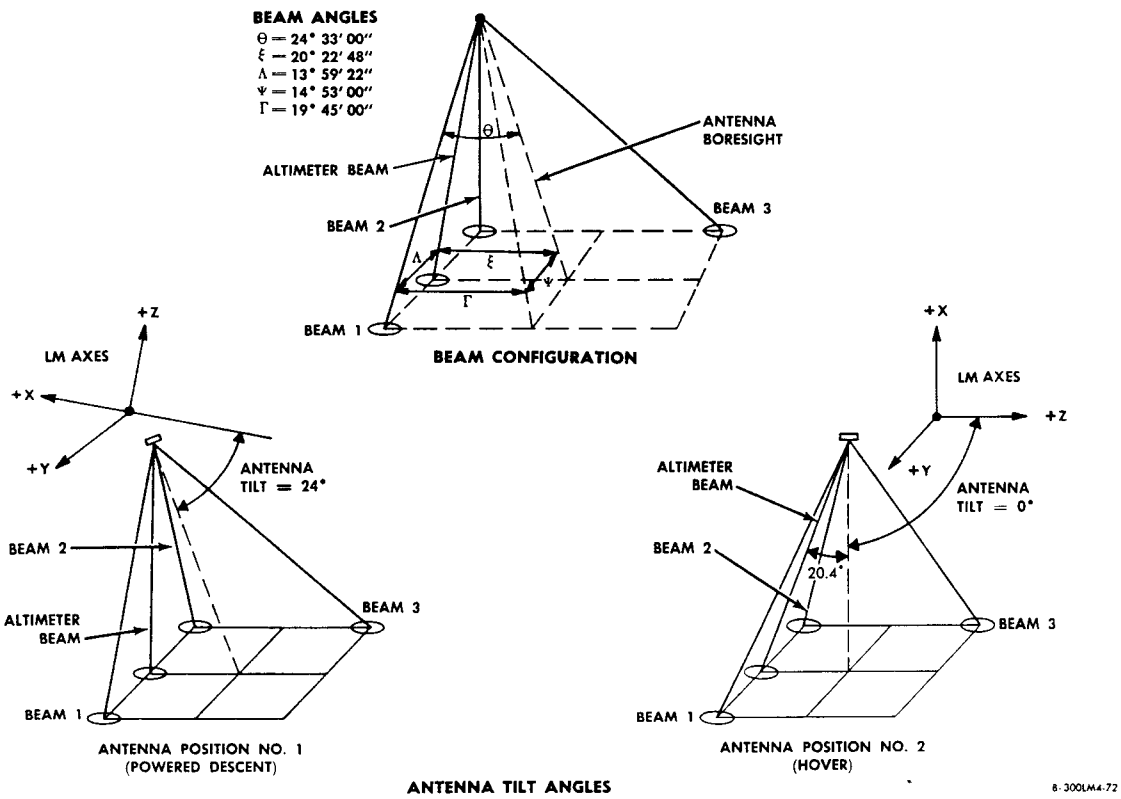

Figure 2.2-12. Landing Radar - Antenna Beam Configuration

2.2.3.3.4 Antenna Beam Configuration. (See figure 2.2-12.)

The antenna beam configuration provides the LR with velocity Doppler and range information relative to the LM and the lunar surface. The Doppler shift along each velocity Doppler beam (D1, D2, and D3) is directly proportional to velocity along the beam between the LM and the lunar surface. A closing velocity beam conveys positive Doppler sense; an opening velocity beam, negative Doppler sense. By linearly frequency-modulating the altimeter beam carrier frequency, the frequency difference between the transmitted and received altimeter beams becomes the range frequency with Doppler component. The Doppler component is removed later, leaving a Doppler-compensated range frequency, which is proportional to the beam transit time.

Regardless of whether the LR antenna is in position No. 1 or 2, the beam angle relationships remain the same between the received altimeter and velocity beams and the antenna boresight. By using formulas based on these beam angle relationships, the LR derives the LR antenna coordinate velocities Vxa, Vya, and Vza.

Above 2,500 feet, the altimeter X-band (9.58 gc) microwave energy has a frequency-deviation range of ±4 mc; below 2,500 feet, a frequency-deviation range of ±20 mc. Transmitter microwave energy samples are continuously mixed with the return energy. The resultant frequency difference (range frequency) is proportional to a sawtooth frequency-deviation rate, and two times the distance to the lunar surface. The altimeter frequency tracker is blanked for a period which includes the transmit and receive times of the sawtooth sweep retrace.

The Doppler velocity sensor (DVS) transmitting array, consisting of parallel waveguide with parallel H-plane slots, forms and propagates the DVS microwave energy into four beams symmetrically positioned about the antenna boresight or beam group center. Only beams 1, 2 and 3 have corresponding receiver arrays, hence the fourth beam is not used and is not shown in figure 2.2-12. There are only three DVS receiving arrays, which are aligned to the three DVS beams. The DVS transmitting array was designed to obtain precisely the desired beam angles shown in figure 2.2-12. These beam angles determine the vector angle of the velocity measured by the beam, and in the resolution of those vector velocities into antenna coordinate velocities, is a factor in determination of scaling accuracy. Each of the three DVS two-way beam widths is 3.66° E-plane and 7.33° H-plane. The DVS E-plane is parallel to the antenna Y axis.

The altimeter transmitting array, consisting of parallel waveguides with angular E-plane slots, forms and propagates the altimeter microwave energy into two beams symmetrically positioned about a center which is 1.9 degrees tilted aft from the antenna boresight or electrical beam group center. The altimeter transmitting array is part of the same structure or assembly as the DVS transmitting array, with the waveguides of each running in the antenna Y-axis direction and alternately interlaced in the antenna Z-axis direction. Only one altimeter beam has a corresponding receiver array, hence the other is not used and is not shown in figure 2.2-12. The altimeter transmitting array is structurally design positioned to obtain precisely the desired beam angle shown in figure 2.2-12. This beam must be located in the plane formed by DVS beams 1 and 2 and must bisect the angle made by those beams, because the Doppler correction for the altimeter beam is obtained from the sum of beams 1 and 2 Dopplers, which represents a Doppler vector in that position. The altimeter beam angles are used by the LGC in the computation of LM altitude from LR slant range output. The altimeter two way beam width is 7.5° E-plane and 3.9° H-plane. The altimeter E-plane is parallel to the antenna Y-axis.

2.2.3.4 Radar Power Distribution.

The RR and LR receive 28-volt d-c power for the antenna heaters from the HEATERS: LDG RDR, RNDZ RDR STBY, and RNDZ RDR OPR circuit breakers (panel 11).

The RR receives power from the CDR's d-c and a-c buses through the PGNS: RNDZ RDR and the AC BUS A: RNDZ RDR circuit breakers (panel 11), respectively. The 28-volt d-c power applied to the RR power supply subassembly, provides regulated outputs of +26, +25, +12, -12, +6, and +4.3 volts dc. The 115-volt a-c power drives the antenna assembly gyro spin motors and supplies the gyro pickoff excitation.

The LR receives 28-volt d-c power from the CDR's d-c bus through the PGNS: LDG RDR circuit breaker (panel 11) for its low-voltage d-c power supply. The regulated outputs of the power supply are +25.3 volts dc for the altimeter and the velocity sensor; for the other functional areas of the LR, +25, -25, +4, and -2 volts dc.

Refer to figure 3-3 for additional circuit breaker information.

2.2.4 MAJOR COMPONENT/FUNCTIONAL DESCRIPTION

2.2.4.1 Rendezvous Radar.

2.2.4.1.1 Antenna Assembly. (See figure 2.2-3.)

The RR antenna is an amplitude-comparison, simultaneous-lobing, directional device that provides accurate angle and angle rate tracking information. The 24-inch-diameter parabolic primary reflector of the radar antenna has a conventional four-port Cassegrainian feedhorn. The radiation from the feedhorn illuminates a hyperbolic secondary reflector located to reflect the feedhorn-radiated RF

energy back to the primary reflector. Use of the hyperbolic reflector uniformly illuminates the parabolic reflector with RF energy and results in the formation of a narrow, highly directional beam. The antenna operates in the X-band region of the microwave spectrum and possesses an overall power gain of 32 db. The signal radiated from the antenna is circularly polarized to minimize signal losses due to variations in attitude that occur between the LM and CSM. The antenna beamwidth is nominally 3.5°.

RAD

The antenna pedestal and base of the antenna assembly are mounted on the external structural members of the LM. The antenna pedestal supports the shaft-axis members, including the shaft resolver and servomotor. The trunnion axis is perpendicular to, and intersects, the shaft axis, which supports the trunnion-axis members through the trunnion resolver and servomotor. The antenna reflectors and the microwave and RF electronics components are assembled at the top of the trunnion axis. This assembly is counterbalanced by the trunnion-axis rotating gyroscope package, mounted below the shaft axis. Both groups of components, mounted opposite each other on the trunnion axis, revolve about the shaft axis. This balanced arrangement enables balanced driving torques and reduces the servo requirements and weight. The microwave, radiating, and the gimbaling components, and other internally mounted components, have flexible cables that connect the outboard antenna components to the inboard electronics assembly. A flexible cable wrap-up system is used at the trunnion- and shaft-bearing joints.

The RR shaft- and trunnion-axis resolvers transmit angular position to the LGC via the CDU RR channels. The LGC uses these angle position data in conjunction with range and range rate to update the state vector. The RR also provides data to LM cabin displays for use by the astronauts in evaluating the rendezvous phase of the mission.

2.2.4.1.2 Electronics Assembly. (See figure 2.2-2.)

The electronics assembly consists of the following subassemblies: receiver, frequency synthesizer, frequency tracker, self-test, antenna control amplifier, range tracker, signal data converter, and instrumentation converter.

Receiver Subassembly. The receiver subassembly is an amplitude-comparison, triple-conversion, three-IF-channel unit that generates shaft and trunnion error signals for an antenna servo loop when angle-tracking the target with the radar antenna. It also functions as an intermediate signal path for received signals, which are used by the frequency tracker and range tracker. An AGC loop in the receiver subassembly maintains a constant signal output to the other subassemblies despite variation in signal input. This ensures that the angle error is a function of the angle error signals, not a function of signal amplitude. The receiver subassembly consists of three channels: sum channel (reference), trunnion-axis difference channel, and shaft-axis difference channel.

The receiver subassembly also contains phase-sensitive detectors for generating angle error signals, an IF distribution amplifier unit for supplying reference channel signals to the range and frequency trackers, and a local oscillator-mixer for generating a second local-oscillator signal. The second local-oscillator frequency is obtained by heterodyning the frequency tracker VCO output and a reference frequency. This produces a sum frequency that is 6.8 mc lower than the incoming 40.8-mc Doppler-shifted frequency. At the second mixer, the Doppler frequency shift is removed; all subsequent signal processing is accomplished at fixed carrier frequencies.

Frequency Synthesizer Subassembly. The frequency synthesizer subassembly supplies the other RR subassemblies and the antenna assembly with coherent reference frequencies, which provide extreme accuracy and a high degree of stability. Multiplying and dividing circuits, local oscillators, amplifiers, and mixers are used in the frequency synthesizer to provide five output frequencies whose functions and destinations are listed in table 2.2-1.

The frequency synthesizer subassembly contains two oscillators. One oscillator operates at 102.425 mc; it provides an input to a chain multiplier in the antenna assembly. The chain multiplier multiplies the input by a factor of 96 to produce the radar transmitter frequency (9832.8 mc). The other oscillator produces a frequency of 1.7 mc. Multiplication and division of this frequency provides the other frequencies required for RR operation. (The 1.7-mc oscillator is controlled in frequency by comparison of its 102.425-mc output with the 102.425-mc oscillator.)

Table 2.2-1. Frequency Synthesizer - Output Frequencies

Frequency (mc)	Function	Destination
5.1	Third mixer excitation	Receiver
6.8	Reference signal	Frequency tracker and range tracker
7.0125	Doppler bias mixer excitation	Frequency tracker
27.2	Second mixer reference	Receiver
102.425	Transmitter excitation	Antenna assembly, multiplier chain

Frequency Tracker Subassembly. The frequency tracker subassembly is a phase-lock loop that detects, acquires, and phase-tracks the received signal in the receiver subassembly sum channel. In addition, the frequency tracker provides Doppler frequency and sense outputs, and frequency lock-on indication.

The frequency tracker phase-locks a VCO with the return signal. A sweep circuit varies the VCO frequency across the expected Doppler frequency range (-100 to +100 kc). The presence of a carrier signal within the locking range, when sensed through a narrow (1 kc) filter by a threshold circuit, stops the sweep and permits the VCO to phase-lock. The phase detector has a 6.8-mc reference signal, supplied by the frequency synthesizer subassembly. An error signal from the receiver subassembly drives the VCO to a frequency, which, when mixed with a 27.2-mc signal at the receiver second IF oscillator produces a 1.7-mc signal that passes through the 1-kc filter. The VCO, which is tracking the Doppler-shifted carrier and is used as a local oscillator, removes the Doppler frequency shift from all signals in the succeeding IF stages. The sweep generator stops sweeping the VCO when the acquisition logic and the threshold detector produce a frequency tracker lock-on discrete. When this discrete and the auto-track enable discrete are present together, the range tracker subassembly and the auto angle track circuits are enabled.

Self-Test Subassembly. The self-test subassembly is used to perform a qualitative test to verify proper operation of the RR electronics. The test provides range, range rate, and angle error data for a simulated 200-nm signal. Basically, the self-test subassembly provides a means of inserting, into the antenna assembly, signals that simulate RF inputs to the RR. Range rate information is contained in a fixed IF offset of 10 kc, corresponding to a velocity of 500 fps. Range information is placed on the crystal oscillator frequency by a varactor phase modulator driven by three-tone phase shifters. Angle error information is simulated by square-wave phase modulation of the difference channel signals, which switches the phase of the difference channels between 90° and 270° with respect to the sum channel signal.

The self-test circuits are enabled when the RADAR TEST switch is set to RNDZ. The RANGE and RANGE RATE indicators should read approximately 195 nm in range and approximately -500 fps in range rate and the antenna should be driven in alternate directions, as indicated by the FDAI error needles.

Antenna Control Amplifier Subassembly. The antenna control amplifier subassembly contains amplifiers for driving the antenna shaft- and trunnion-axis servomotors, amplifiers for driving the gyro torquer coils, and voting logic for switching between the redundant and primary gyros in the event of a malfunction of the pair of gyros in use. The amplifiers, in conjunction with the antenna components and receiver subassembly, form inner and outer closed loops for each axis. The inner (stabilization) loop maintains the antenna boresight axis fixed in inertial space in the presence of vehicle motion, as sensed by the gyros. The outer (tracking) loop further maintains the antenna boresight on the target, using the tracking error signals from the receiver. In the designate mode, the tracking loop is open and LGC-designated antenna

position data, or manual slew data are accepted by the subassembly. The LGC designates the antenna boresight to the target, and supplies an automatic tracking enable signal for the RR when within 0.5° of the computed target LOS. The possibility of side-lobe lock-on is made negligible by limiting the antenna boresight displacement from the computed target LOS to within 0.5° before closing the tracking loop. Allowing for a 1° error in the computer LOS with respect to the actual LOS to the CSM and a 1° boresight error for the RR-to-IMU alignment, the total misalignment is limited to 2.5°, which is adequate to prevent an antenna side-lobe lock-on. (The first sidelobe stable tracking point is 6° off boresight.) The antenna then continuously tracks the target by maintaining the monopulse receiver angle error signals at null. The antenna may also be manually slewed, at either of two selected LOS rates. In this case, the enable signal required to close the automatic tracking loop is supplied by setting the RENDEZVOUS RADAR selector switch (panel 3) to AUTO TRACK.

The antenna shaft and trunnion are positioned by 32-pole, brushless, permanent-magnet-rotor-type motors. The motors are driven by pulse-width-modulated drive signals applied to their sine and cosine windings. The direction of motor rotation is reversed by reversing the motor winding across the pulse-width-modulated drive voltage.

A gyro voting circuit, consisting of performance comparison and logic-switching circuits, automatically detects a malfunctioning gyro and removes it from the control loop. There are two pairs of gyros; one pair at a time is used to stabilize the antenna. Either pair can be used. The voting circuit determines whether the active pair contains a failed gyro by comparing the outputs of the gyros, three at a time. If a failure or degradation occurs in the pair in use, the other pair is automatically switched into the antenna-stabilizing network.

For certain types of gyro failure, and when slewing or designating at high angular rates, the voting logic can switch to the pair containing the failed gyro. This results in loss of angle control, and unpredictable antenna motion.

A RR GYRO SEL switch permits manual override of the gyro voting logic. The switch is on the AOT guard. The AUTO position permits normal voting operation. Setting the switch to PRIM or SEC selects the primary or secondary pair of gyros, respectively, without voting operating. Normally, the switch is set to PRIM; in case of suspected gyro malfunction, it is set to SEC.

Range Tracker Subassembly. The range tracker subassembly determines the range to the transponder by measuring the relative phase delay between the tones that modulate the transmitted and the received signals. The transponder reply signal, after undergoing dual frequency conversion in the RR antenna assembly and receiver subassembly is applied as a 6.8-mc signal to the coherent detector of the range tracker subassembly. This signal is demodulated in the coherent detector, which uses a 6.8-mc quadrature reference. The individual sine-wave range tone signals are extracted from the receiver noise by use of band-pass filters. The range phase delay, proportional to range, is measured independently on each of the three tone signals in a closed tracking loop, using three locally generated reference square waves each of which has variable phase with respect to the transmitted signals. The phase of the reference square waves is adjusted until they have matching phase with respect to each of the received signals. The phases match when each reference square wave is in quadrature with the phase of the corresponding received tones. The reference square waves are digitally produced by comparison between a running high-speed counter and a low-speed range counter. The low-speed range counter is driven upward or downward, until phase null is achieved in each of three tone phase detectors, by incremental range pulses obtained from a voltage-to-PRF converter. Above 50.6 nm, the converter is controlled by weighted integration of two of the three phase-detector error signals; below 50.6 nm, by one of the error signals.

Signal Data Converter Subassembly. (See figure 2.2-13.) The signal data converter subassembly consists of a computer interface board and an input-output amplifier board; it provides the electrical interface between the RR and the LGC for range and range rate data. It also supplies an 18-bit range word for the displays and routes the RR control signals from the control panel. The computer interface board contains a 15-bit binary counter, a 15-bit shift register, two strobe gate generators and associated data transfer logic, and six discrete interface circuits. The input-output amplifier board contains relay drivers, pulse shapers, a signal shaper, and antenna servo control logic. Depending on the control signals from the LGC, the computer interface board provides either range or range rate data to the LGC.

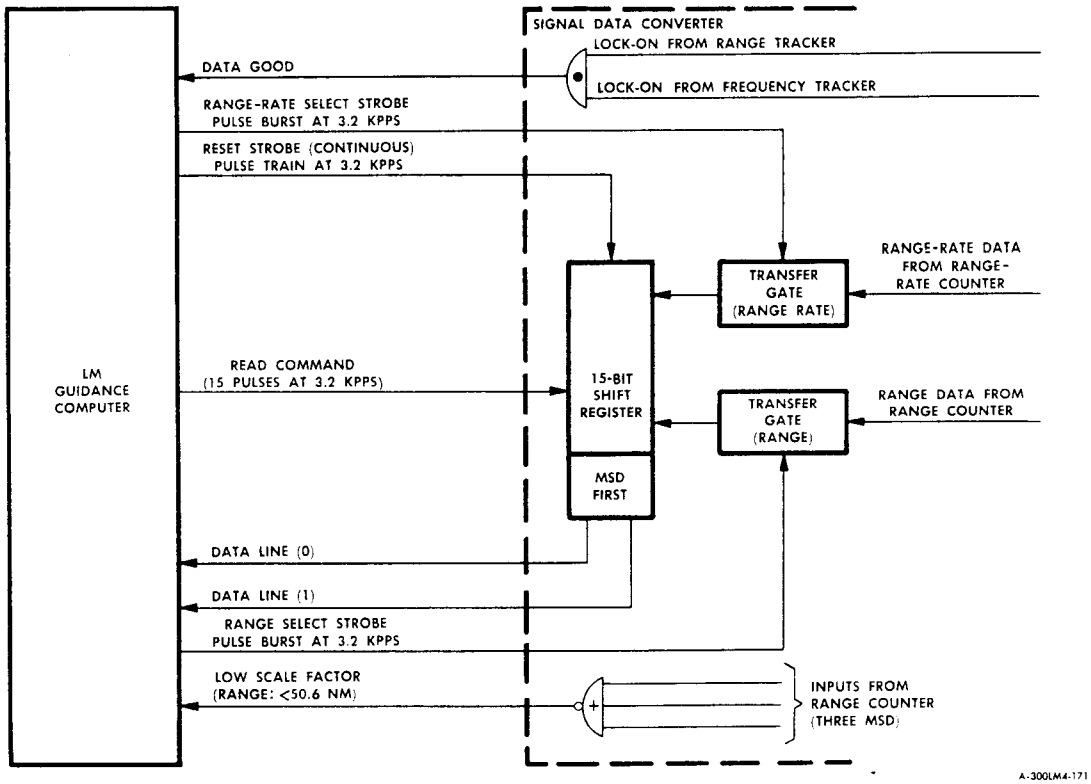

Figure 2.2-13. Rendezvous Radar Digital Data Transfer - Functional Flow Diagram

The LGC requests range data by sending strobe pulses on three lines at a rate of 3,200 pps. One strobe line supplies a continuous train of reset pulses for timing. A burst of 256 pulses is sent on a second strobe line to read the range into the register. After a strobe interval of 80 milliseconds (read time), the LGC sends a burst of readout pulses on a third line to obtain the data. In this operation, the range data are transferred automatically from the range counter to the 15-bit shift register. The range data are transmitted to the LGC in true and complement forms on two separate lines.

The LGC requests range rate data by sending pulses on the reset strobe line and a burst of pulses on the range rate gate strobe line at a rate of 3,200 pps. Both sets of pulses are routed through a gate generator to provide three outputs, as follows:

- Reset pulses to clear the 15-bit binary counter
- Range rate pulse to control the duration of the counting period
- Transfer pulses to activate the 15-bit transfer logic.

The range data routed to the LGC can have either of two different scale factors. Range low-scale factor switching is automatically implemented by the RR at ranges of 50.58 nm or less. The RR has an 18-bit accumulator (counter) for transferring range data to the 15-bit shift register. Only 15 of 18 bits are gated to the shift register, to be sent to the LGC. At ranges greater than 50.58 nm, the 15 most significant bits

are transferred. At ranges less than 50.58 nm, the 15 least significant bits are transferred. The range scale factor determines whether the 15 least significant bits or 15 most significant bits from the counter are gated to the shift register. The RR sends a discrete signal (RR range low-scale factor) to inform the LGC that low-scale-factor radar operation is in effect. The low-scale factor of the transferred range data is 9.38 feet/bit; the high-scale factor, 75.04 feet/bit. RR scale factor switching does not occur during range data transfer.

Instrumentation Converter Subassembly. The instrumentation converter subassembly provides the following signals, which are obtained as outputs from a power monitor converter and data-no-good/no-track converter.

- Transmitter power output to cabin display (SIGNAL STRENGTH indicator on panel 3)
- Data-no-good signal to telemetry
- No-track signal to cabin display (NO TRACK light on panel 3).

The instrumentation converter subassembly consists of a power monitor converter and a data-no-good and no-track converter. The power monitor converter output indicates the RR transmitter power output. A d-c analog voltage from a directional coupler and diode rectifier in the antenna assembly is chopped by a 20-kc square wave, amplified, and demodulated. The d-c analog signal is filtered and then routed to the SIGNAL STRENGTH indicator, where it indicates RR transmitter power output.

The data-no-good and no-track converter monitors the signal data converter subassembly for a data-no-good condition. A data-no-good condition exists when either range or range rate lockon is missing. This converter generates data-no-good and no-track signals upon detection of a data-no-good condition. Routed to the IS, the data-no-good signal enables the lighting of the RNDZ RDR caution light (panel 2) and the telemetering of the no-track condition to MSFN. The no-track signal also enables the lighting of the RNDZ RADAR: NO TRACK light.

2.2.4.2 Rendezvous Radar Transponder.

2.2.4.2.1 Antenna Assembly. (See figure 2.2-14.)

The transponder antenna assembly is mounted tilted 15° from the normal to the surface of the Service Module. The antenna assembly, located close to the transponder electronics assembly, is approximately 159 inches forward of the Service Module aft section, with CSM-axis coordinates of 40° from +Z-axis, 50° from +Y-axis, and 75° off +X-axis. The antenna, a wide-angle-of-coverage horn, has an on-axis gain of approximately +7 db. Out to the limits of antenna coverage (±60°), the antenna gain is never less than 0 db.

The antenna part of the assembly consists of a Y-type, two-porthole, waveguide horn with a circular ground plane. The antenna is protected by, and isolated from, an aluminum-phosphate radome connected to a cork-insulated fiberglass housing mounted on the Service Module fairing. The radome and housing protect the antenna from dust and thermal and abrasive blastoff effects. The radome composition permits optimum microwave reception and transmission with minimum deterioration of signal strength and characteristics.

The antenna is coupled, by waveguide sections, to the transponder electronics assembly. A waveguide flange connects the antenna base to an antenna waveguide flexible adapter. A coupling flange connects the flexible adapter to a waveguide transmission line.

2.2.4.2.2 Electronics Assembly. (See figure 2.2-7.)

The electronics assembly consists of the following subassemblies: microwave, receiver, carrier lock loop, tone-modulation detector, and power supply.

Microwave Subassembly. The microwave subassembly couples the antenna to the receiving and transmitting circuits of the transponder. A circulator in the microwave subassembly permits dual use of the

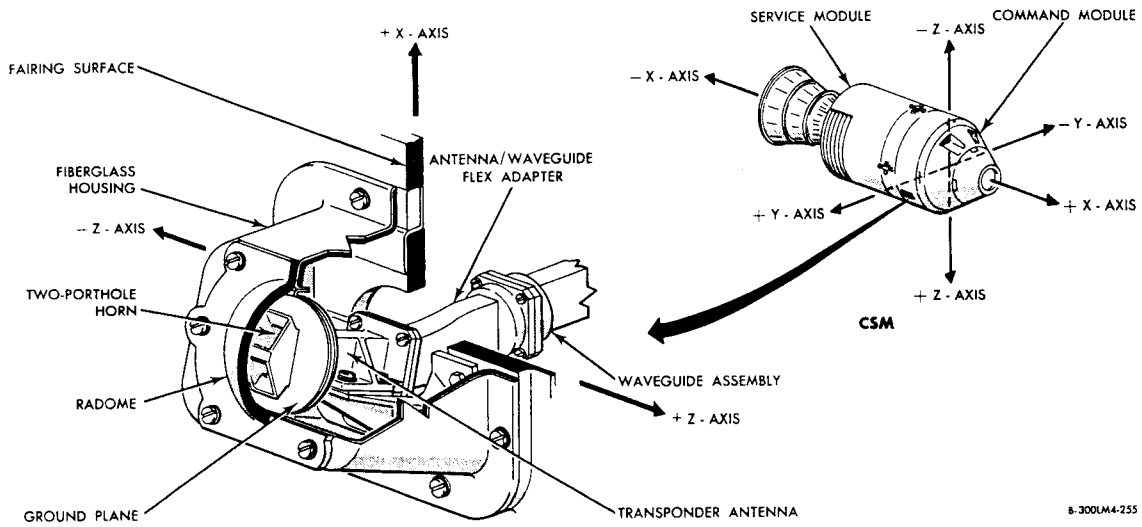

Figure 2.2-14. Transponder Antenna Assembly

antenna for both transmitting and receiving without significant leakage of the transmitted signal into the receiver circuits. The signals transmitted from the RR are routed through the circulator to the mixer. The circulator permits signal transfer in the direction of the mixer only. The mixer combines the received signal with a 9792-mc signal developed in the X96 frequency multiplier. The mixer output, a 40.8-mc IF signal, is amplified by a preamplifier and routed to the receiver subassembly. The X96 frequency multiplier develops the 9792-mc signal by multiplying the 102-mc output of the carrier lock loop subassembly by 96. The 9792-mc signal is used as the carrier frequency for the transponder transmitter signal. The 9792-mc signal is applied to the three-tone phase modulator, where the range tones from the originally received signal are phase-modulated onto the newly generated transponder carrier signal (9792 mc plus Doppler); this signal is transmitted for RR acquisition.

The modulated output of the three-tone phase modulator is coupled to the antenna waveguide through the circulator. The modulated transmitted energy enters one port of the circulator, whose magnetic and RF fields cause it to be rotated clockwise to the output port and out to the antenna.

When enabled, the self-test circuit applies 12 volts dc to an oscillator. The oscillator provides a 40.8-mc test signal, which is applied to the preamplifier of the first mixer. This self-test signal takes the place of the 40.8-mc output of the mixer and is used to self-test the receiver subassembly.

Receiver Subassembly. The 40.8-mc IF signal from the microwave subassembly is amplified by the first IF amplifier and applied to the second mixer. The amplifier output is mixed with a 34-mc signal from the carrier lock loop subassembly to produce a 6.8-mc output.

The 6.8-mc signal is routed through an 8-kc band-pass filter to produce a narrow-band signal and through a 200-kc band-pass filter to produce a wide-band signal. The narrow- and wide-band signals are both fed to the threshold detector of the carrier lock loop subassembly to permit comparison of the noise levels of the two signals. The 6.8-mc IF signal is also routed to the tone-modulation detector subassembly through an output buffer and gating circuit.

The receiver subassembly also provides an AGC loop for the transponder electronics assembly. The AGC loop comprises the preamplifier of the first mixer in the microwave subassembly and the first IF amplifier in the receiver subassembly. The narrow-band output of the 8-kc band-pass filter is passed, through a 1-kc filter, to the AGC amplifier and detector. By filtering out the noise, the narrow-band

filter assures that AGC response is mostly determined by the received signal level. The AGC loop maintains the 6.8-mc receiver output signal constant despite the variation of the signal input from the RR.

Carrier Lock Loop Subassembly. The acquisition logic and sweep generator circuit produces a sawtooth output, which sweeps the VCO linearly with time. By use of a difference amplifier, the lock-up and threshold detector compares the respective signal power of a 6.8-mc wide-band (100 kc) signal with a 1-kc limited-band signal (+10 db) extracted from the wide-band signal. When the signal power of the ±500-cps signal (1-kc limited-band signal) exceeds that of the 6.8-mc wide-band signal, a stop-sweep signal is sent to the acquisition logic and sweep generator. The sweep generator stops its linear-timed, sawtooth sweep of the VCO. The VCO phase positioning is now controlled by error signals generated by the modulator, which derived these signals by comparing the VCO output with the 6.8-mc narrow-band signal. The difference amplifier switches in a notch filter to remove the 200-cps phase modulation from the error signal. The error signal enables a relay to produce the VCO tune signal. Through the acquisition logic and sweep generator, the VCO tune signal drives the VCO phase positioning to make and keep the VCO output phase-coherent with the 6.8-mc narrow-band signal.

The lock-up detector also compares the 6.8-mc narrow-band signal with the output of the VCO. When the two signals are phase-locked, the detector produces a frequency lock-on discrete, which is used to gate the 6.8-mc signal out of the receiver subassembly. The 6.8-mc output of the VCO is used as a reference signal in the tone-modulation detector subassembly. This 6.8-mc signal is also multiplied by five in a frequency multiplier to produce a 34-mc signal, which is routed to the second mixer in the receiver subassembly and to the X3 frequency multiplier. The 102-mc output of the X3 frequency multiplier is applied to the microwave subassembly.

Tone-Modulation Detector Subassembly. Routed from the output buffer and gate (receiver subassembly), the 6.8-mc signal, with RR-transmitted Doppler and three tones, is compared with the 6.8-mc reference signal at the coherent detector (tone-modulation detector subassembly). The coherent detector uses the reference signal to ensure that the transponder transmitter signal will be frequency-coherent with the RR transmitter signal. The output of the coherent detector is routed to three parallel band-pass filters and amplifier and phase-adjust circuits, one each of 200 cps, 6.4 kc, and 204.8 kc. The 6.4- and 204.8-kc tone filters are in an oven whose temperature is controlled to 160°±1° F to stabilize tone phase shift. Each strip of circuits filters, amplifies and phase-adjusts its respective tone before it is routed to the phase modulator in the microwave subassembly.

Power Supply Subassembly. The power supply subassembly provides all the secondary power (+25, +12, and -12 volts dc) required by the transponder electronics assembly.

2.2.4.3 Landing Radar.

2.2.4.3.1 Antenna Assembly. (See figure 2.2-15.)

The LR antenna assembly is mounted on an antenna pedestal, which is bolted to the underside of the descent stage. In antenna position No. 2 (hover), the antenna transmitting and receiving arrays face directly downward; the antenna is parallel to the plane formed by the LM Y-LM Z-axis. Two interlaced transmitting phased arrays propagate cross-polarized (90° out of phase) velocity (10.51 gc) and altimeter (9.58 gc) microwave energy to the lunar surface. Four receiving broadside arrays (DVS beams No. 1, 2, and 3, and the altimeter beam) are each structurally positioned so their maximum-gain direction coincides with the center of the corresponding transmitted microwave beam. To effect this cross-polarization, the velocity sensor transmitting and receiving arrays have E-wall slots in their multiwaveguides, and the altimeter transmitting and receiving arrays have H-wall slots in their multiwaveguides. A nonabsorptive finish, thermal blanket, and external thermal shield partially protect the antenna assembly against the effects of the descent engine plume and the thermal conditions of space.

Inside the antenna assembly, four pairs of microwave mixers, four pairs of audio-frequency preamplifiers, a velocity sensor transmitter, an altimeter transmitter, and a frequency modulator are mounted on a platform underneath the interlaced transmitting arrays. Specially cut waveguide sections, phase shifters, isolators, and waveguide couplers provide optimum matching, minimize VSWR, and obtain proper phase relationships between the transmitters and transmitting phased arrays and between the four microwave mixers and the four receiving arrays. At the back of each receiving array and at right angles to its parallel waveguides, a coupling waveguide is positioned to collect received microwave energy equally

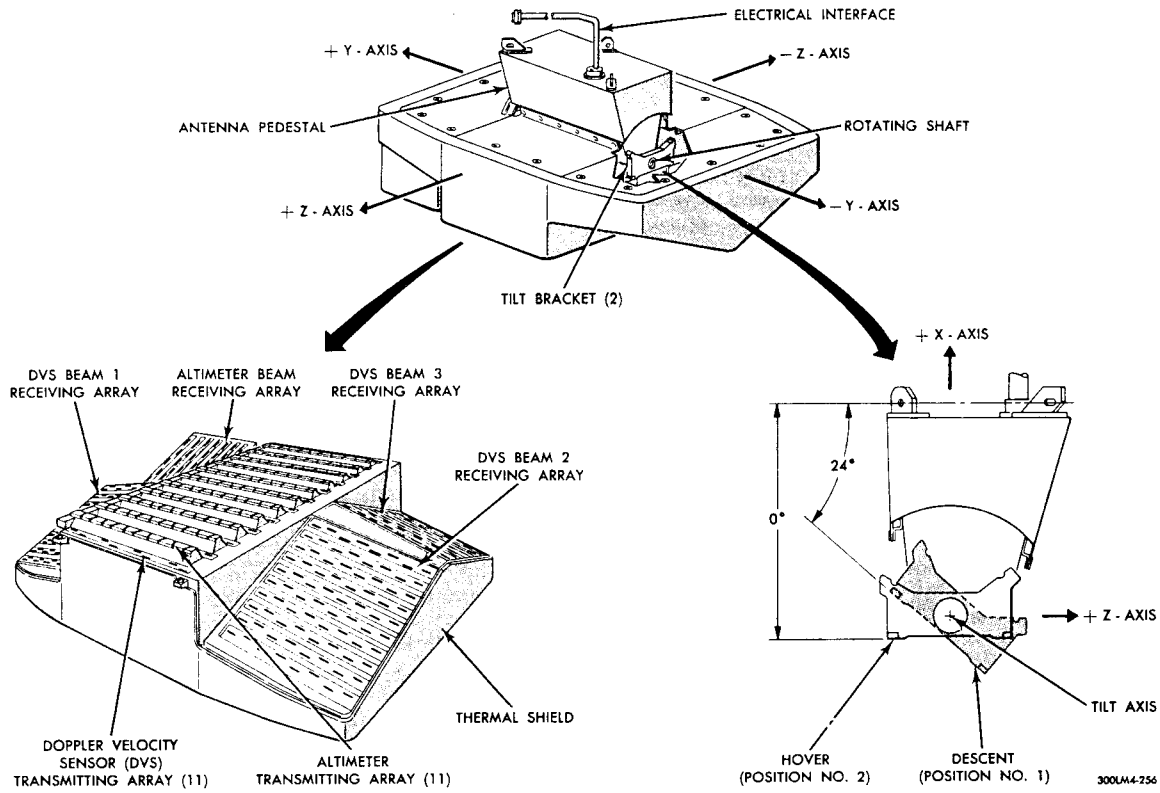

Figure 2.2-15. Landing Radar Antenna Assembly

from each of the multiple waveguides. The microwave energy is routed through specially cut waveguide sections to a microwave, quadrature-pair balanced mixer. Phase shifters and isolators within the waveguide sections maintain the 0°/90° phase relationships and thereby retain the Doppler velocity sign sense of the received microwave energy. At a dual preamplifier (figure 2.2-10), this Doppler sign sense is further retained by quadrature-pair lines (0° and ±90°). When the received microwave energy conveys a closing Doppler velocity, the ±90° line leads the 0° line by +90°. A microwave leveler, between the altimeter transmitting array and the altimeter transmitter multiplier, minimizes amplitude modulation of the frequency-modulated transmitter signal by smoothing the amplitude fluctuations.

The antenna pedestal has a tilt mechanism for tilting the antenna to either of two positions and an electrical interface between the antenna assembly and the LR electronics assembly. On command initiated by the LGC or the LDG ANT switch, a tilt-actuator motor moves the antenna to position No. 1 (descent) or 2 (hover). In the descent position, the antenna group beam center is tilted 24° with respect to the LM X-axis; in the hover position, it is parallel to the LM X-axis. During a lunar-landing mission, the antenna is initially set to the descent position for the descent phase. When the LM pitchup maneuver occurs, the LGC commands the antenna to the hover position. The antenna remains in the hover position until lunar touchdown.

Quadrature-Pair Balanced Mixers. (See figure 2.2-10.) Three quadrature-pair balanced mixers remove the AF Doppler components with Doppler sign sense from the three received velocity beams. At the balanced mixers, the received velocity beam signals (D1, D2, and D3) are mixed with a continuously sampled, transmitted velocity beam signal (10.51 gc) to extract the AF Doppler shifts and Doppler sign

sense. The three balanced mixer outputs go to three dual AF preamplifiers. At each of the three balanced mixer outputs, a quadrature pair retains the Doppler sign sense of the returned velocity beam signal; the AF Doppler frequency with Doppler sign sense is proportional to the opening or closing velocity between the LM and the lunar surface along the center of the received velocity beam.

One quadrature-pair balanced mixer extracts the range frequency with its AF Doppler shift. The received altimeter signal is compared with a continuously sampled, transmitted altimeter beam signal (9.58 gc) to obtain the beam frequency which is routed to a dual AF preamplifier. At the mixer output, a quadrature pair retains the Doppler sign sense. The range frequency, which is obtained by subtracting the AF Doppler shift from the beam frequency, is proportional to the time difference between the received and transmitted altimeter beams.

Dual Audio-Frequency Amplifiers. (See figure 2.2-10.) The Doppler audio spectrum paired signals from the balanced mixers are applied to dual audio-frequency amplifiers. Each pair of amplifiers amplifies the Doppler-paired signals to obtain a total gain of 88 db at low received signal levels. Because excessive signal strengths at low altitudes may overdrive the frequency tracker, a threshold detector monitors the output level of the 55-db gain amplifiers. When the 55-db gain signals exceed 300 millivolts, a switched AGC action cuts out the 33-db gain amplifiers. A low-gain discrete notifies the frequency tracker of the lowered amplitude condition.

Velocity Sensor Oscillator/Multiplier. (See figure 2.2-10.) The velocity sensor oscillator/multiplier transmits a continuous-wave, 10.51-gc signal through a three-beam, electronically tilted phased array. An oscillator generates a 104.478-mc fundamental frequency, which is power-amplified and frequency-multiplied by a multiplier-varactor chain to produce the 10.51-gc transmitter signal (200 milliwatts minimum power). The transmitter signal is applied to the velocity sensor phased array through a directional coupler and specially cut waveguide sections. A sample of transmitter power is picked off and then routed through a power monitor for display by the SIGNAL STRENGTH indicator. Low-power transmitter signals are routed from 20-db directional couplers to three velocity sensor microwave mixers, where they function as local-oscillator signals for RF-to-AF conversion. Each resulting audio-frequency Doppler component is proportional to the Doppler velocity along the corresponding received beam.

Altimeter Transmitter/Multiplier. (See figure 2.2-10.) The altimeter transmitter/multiplier consists of a power amplifier and a multiplier-varactor. The altimeter oscillator/modulator applies a sawtooth, frequency-modulated, 99.79-mc signal, which is swept at a 130-cps repetition rate, to the transmitter. The 99.79-mc signal is power-amplified and then frequency-multiplied by the multiplier-varactor chain to produce a 9.58-gc transmitter signal (175 milliwatts minimum power), which is applied to the altimeter phased array through a microwave leveler, a directional coupler, and specially cut waveguide sections.

The microwave leveler minimizes amplitude fluctuations, to prevent unwanted amplitude modulation of the frequency-modulated transmitter signal. The 9.58-gc transmitter signal frequency deviation is ±4 mc at LM altitudes in excess of 2,500 feet; ±20 mc, at 2,500 feet and less. A sample of transmitter power is picked off and then routed through a power monitor for display by the SIGNAL STRENGTH indicator. A low-power transmitter signal (9.58 gc) is fed from a directional coupler to a quadrature-pair balanced mixer, where it is continuously compared and mixed with the received altimeter signal. The resulting frequency difference, between the transmitted and received signals, is the range frequency, which is proportional to the sawtooth frequency-deviation rate and twice the distance to the reflecting surface. An RF-to-AF conversion also results in an audio-frequency Doppler component, which is proportional to the velocity along the received altimeter beam. This unwanted Doppler component is subsequently cancelled, leaving a Doppler-compensated range frequency. The LM altitude is derived from the Doppler-compensated range frequency.

Altimeter Oscillator/Modulator. (See figure 2.2-10.) The altimeter oscillator/modulator generates sawtooth, frequency-modulated, 99.78-mc average center-frequency signals swept at a 130-cps repetition rate. The frequency-deviation rate is ±41.6 kc (nominal) at LM altitudes in excess of 2,500 feet; ±208 kc (nominal), at 2,500 feet and less. This frequency-modulated signal (14 milliwatts nominal) is applied to the altimeter transmitter/multiplier.

Oscillator circuits develop 130-cps square waves, which are applied to a sawtooth generator. The sawtooth-generator outputs are linear sawtooth waveforms, with a sweep time of 7,000 microseconds and a

flyback time of 700 microseconds. Through a switch attenuator, a VCO is swept by sawtooth waveforms of suitable voltage amplitude. An AFC loop minimizes the VCO center-frequency drift. The VCO output is power-amplified and frequency-multiplied to become the frequency-modulated, 99.79-mc average center frequency.

An altitude mode control signal applied to the switch attenuator determines whether the VCO center frequency is swept at a high or low frequency-deviation rate. A high frequency-deviation rate is initiated when the LM altitude is 2,500 feet or less. A blanking signal to the range frequency tracker blanks for a period including the sawtooth-generator transmitter and receiver flyback times (7,000 microseconds and 700 microseconds, respectively).

Antenna Pedestal. (See figure 2.2-15.) The antenna pedestal serves as the electrical and mechanical interface between the antenna assembly and the LM. It also positions the antenna in either of its two operating positions (descent and hover). Antenna positioning is performed by a tilt-actuator (d-c reversible) motor controlled manually with the LDG ANT switch, or automatically by an LGC command if the switch is set to AUTO. The AUTO position is the normal mission position; it allows the LGC to switch the antenna from the descent position to the hover position at the optimum altitude for the descent trajectory being used.

A position is selected by application of +28 volts on the appropriate control line. A limit switch, which opens when the antenna reaches the selected position, removes power from the actuator. Travel time to either antenna position is less than 10 seconds. In each antenna position, a spring-tension, 400-pound preload prevents the antenna from vibrating off its selected position. The 10-second travel time is necessary to traverse the 24° angle and because of this stressed preload. Nominal power drain is 15 watts during this travel time. Antenna-position indication is provided by a separate set of switch contacts, which is located in the antenna pedestal. The indication provided by the switch contacts is used to generate an antenna position No. 1 or 2 discrete to the LGC.

Antenna Heaters and Temperature Control. (See figure 2.2-10.) The antenna assembly, designed for a temperature range of 0° to 185° F, is mounted off a surface whose temperature can vary from -260° to +260° F during translunar and lunar-orbital periods. An external thermal shield, thermal blankets, and a nonabsorptive finish partially protect the antenna from spatial temperature extremes. When the LR is operating, sufficient heat is dissipated to maintain antenna temperature within +55° and +150° F.

When the LR is not operating, an antenna temperature control and antenna heaters maintain antenna temperature within +55° to +70° F. The antenna heaters are cal-rod heating elements that are imbedded in the antenna transmitting-array support structure. With the HEATERS: LDG RDR circuit breaker closed and the PGNS: LDG RDR circuit breaker open, +28 volts dc is applied to the antenna heater control, which then furnishes heater power (through a power amplifier) to the antenna heaters. Using thermistors to monitor antenna temperature and controlling switch circuits, the antenna heater control switches in the power amplifier to apply power to the heaters when antenna temperature drops below +55°F; it switches out the power amplifier when antenna temperature exceeds +70° F.

To assure accurate LR frequency tracking when first turned on, the monitored antenna temperature when the LR is not operating must not be less than +50° F and should not exceed +70° F. With the LR turned on, the antenna temperature must be within +50° and +150° F to assure velocity and range data accuracy. When the PGNS: LDG RDG circuit breaker is closed, the LR is activated and antenna heater power is turned off. An antenna temperature sensor provides antenna temperature signals to the TEMP indicator (panel 3).

2.2.4.3.2 Electronics Assembly. (See figure 2.2-10.)

The electronics assembly contains four frequency trackers, a velocity data converter subassembly, a velocity data computer subassembly, and a signal data/range converter subassembly. The electronics assembly provides the LGC and LM displays with inputs that correspond to the range along the altimeter beam and antenna coordinate velocities with respect to the LM axes.

Doppler Velocity Frequency Trackers. Three Doppler velocity frequency trackers convert the broadband outputs of the dual AF preamplifiers (antenna assembly) to discrete AF Doppler components. Using a variable oscillator and narrow-band, low-pass filters, each frequency tracker acquires and tracks the

to the centroid of the Doppler power spectrum which corresponds to the center of the returned velocity beam. The resultant Doppler audio frequency is superimposed on a 614.4-kc subcarrier for further processing by a converter within the velocity data converter subassembly. Doppler sign sense representative of opening or closing velocity is interpreted and preserved through the frequency trackers, and a VDG discrete is sent to the LGC, when all the Doppler velocity frequency trackers are locked on to the discrete Doppler audio frequencies at the centers of the received velocity beams. Each Doppler velocity frequency tracker scans, acquires and tracks the AF Doppler component at the center of the corresponding velocity beam.

Range Frequency Tracker. The range frequency tracker operates in a manner similar to that of the Doppler frequency trackers. From a dual AF preamplifier, this frequency tracker receives a broadband output containing a range frequency with AF Doppler component. The frequency tracker scans, acquires, and tracks the centroid of these frequencies, which corresponds to the center of the returned altimeter beam. When the frequency tracker is locked on and tracking and the two rear velocity beam trackers are tracking, a RDG discrete is sent to the LGC. The range frequency with AF Doppler component is sent to a range frequency converter.

Velocity Data Converter Subassembly. The velocity data converter subassembly contains three velocity data converters, a range converter, a reference frequency generator, a bandwidth control circuit, and logic gates. From the Doppler velocity frequency trackers, each Doppler offset frequency with quadrature phases of 0°, 90°, 180°, and 270° is applied to a converter in the velocity data converter subassembly. The converter removes a 614.4-kc subcarrier from the Doppler offset frequency, synchronizes and multiplies the Doppler offset frequency by four to retain the quadrature phases, indicates Doppler sign sense, and, based on Doppler sign sense, provides an output to computers within the velocity data computer subassembly. From each of three converter outputs, a Doppler signal (4D >0 to 4D <0) goes to the computers within the velocity data computer subassembly. The expression 4D >0 denotes four times the Doppler offset frequency with positive Doppler (closing velocity); 4D <0, four times the Doppler offset frequency with negative Doppler (opening velocity).

The range frequency converter operates in a manner similar to that of the velocity data converters. From the range frequency tracker, the range frequency converter receives a range frequency and a Doppler offset frequency with quadrature phases of 0°, 90°, 180°, and 270°. The range frequency converter removes the center frequency and then routes the range frequency with Doppler frequency to range converter circuits of the signal data/range converter subassembly.

The bandwidth control circuit, basically a frequency comparator, switches all the Doppler velocity frequency trackers to narrow band-pass operation (tracking) when an altitude mode discrete indicates an altitude of 2,500 feet and less. When a Doppler velocity frequency tracker output is less than 1.47 kc (Doppler frequency), the circuit switches the frequency tracker to narrow band-pass operation by switching the low-pass filters from 1,200 cps to 500 cps.

Logic gates monitor tracker lock-on discretes from the four frequency trackers (three Doppler velocity, and range). When all the Doppler velocity frequency trackers are locked on, discretes TL1, TL2, and TL3 enable a VDG discrete to the LGC. When the range frequency tracker is locked on and discretes TL1 and TL2 are present, the RDG discrete is enabled and routed to the LGC. The reference frequency generator provides all the reference frequencies necessary for LR operation.

Velocity Data Computer Subassembly. The velocity data computer subassembly consists of three computers, which compute antenna coordinate velocities Vxa, Vya, and Vza from the discrete Doppler components with Doppler sign sense (4D <0 and 4D >0) received from the Doppler velocity frequency trackers. With these velocity frequency trackers locked on, VDG discretes gate the lateral (Vya) and forward (Vza) velocities, in d-c voltage form, to the X-pointer indicators; the altitude rate (Vxa), as a PRF with altitude rate sign sense, to the ALT RATE indicator. The altitude rate sign sense conveys positive or negative Doppler velocity. The VDG discretes also gate Vxa, Vya, and Vza, as PRF, to the signal data circuits of the signal data/range converter subassembly.

Signal Data/Range Converter Subassembly. The signal data/range converter subassembly consists of signal data and range converter circuits and an altitude mode switch. From the range frequency converter output, the range frequency with Doppler (D4) is applied to the range converter circuits.

When discretes TL1 and TL2 are present, these circuits use a computer quantity Vxa' to cancel the Doppler, leaving Doppler-compensated range frequency in pulse-train form. The range converter circuits drive Vxa' by adding the Doppler products D1 and D2 and multiplying the sum by 15/16. The range frequency, as PRF, is applied to the altitude mode switch circuit and to the signal data circuits. When the range PRF is equivalent to 2,500 feet or less, a low-altitude PRF is gated to the ALT indicator. A mode (M) discrete changes the altimeter oscillator/modulator frequency-deviation range from ±4 mc to ±20 mc. The discrete switches the frequency trackers to narrow band-pass operation. The M discrete also enables a range low-scale factor discrete to the LGC.

The signal data circuits convert the radar data, in PRF form, into the LGC 15-bit format. An LGC strobe command enables the signal data circuits to read out particular radar data (Vxa, Vya, Vza, or range). For lateral velocity (Vya), LGC strobe command Vya strobes input gates to gate in the Vya pulse train, allowing 80 milliseconds to be counted into a 15-bit counter. On LGC readout command, the Vya data in a shift register is read out in serial binary form to the LGC. Upon receiving the Vya data, the LGC subtracts a number equal to 0.80 x CF to extract the velocity and its polarity. The velocity is multiplied by its scale factor to convert to lateral velocity in feet per second. Five 80-millisecond samples are averaged to obtain one smoothed 400-millisecond value to be used for state vector computation update.

2.2.5 PERFORMANCE AND DESIGN DATA.

The performance and design data for the Radar Subsystem are given in tables 2.2-2 and 2.2-3.

Table 2.2-2. Rendezvous Radar and Transponder - Performance and Design Data

Rendezvous radar	
Radar transmitted frequency	9832.8 mc
Radar received frequency	9792.0 mc + Doppler
Radiated power	300 mw (nominal)
Antenna design	Cassegrainian
Angle-tracking method	Amplitude monopulse
Antenna diameter	24 inches
Antenna gain	32 db (nominal), 31.5 db at beam center, 28.0 db at 2° off boresight
Antenna beamwidth (3-db points)	4.0°
Antenna side-lobe level	-13 db adjacent to main lobe
Gyroscopes	Four (two redundant)
Modulation	Phase modulation by three tones: 200 cps, 6.4 kc, and 204.8 kc
Receiver channels	Reference, shaft (pitch), and trunnion (yaw)
Receiver noise figure	10 db (maximum)
Receiver intermediate frequencies	40.8, 6.8, and 1.7 mc
Maximum range (unambiguous)	405 nm
Minimum range	80 feet

Table 2.2-2. Rendezvous Radar and Transponder - Performance and Design Data (cont)

Rendezvous Radar (cont)	
Range accuracy	Bias: ±500 feet or 0.05%, whichever is greater, for ranges > 50.6 nm ±120 feet for ranges < 50.6 nm Random (3σ): 80 feet or 1% for ranges between 80 feet and 5 nm 300 feet or 1/4% for ranges between 5 and 400 nm
Range data output	15-bit serial format
Range scale factor	
400 to 50.6 nm	75.04 feet/bit
50.6 nm to 80 feet	9.38 feet/bit
Range rate	+4,900 to -4,900 fps
Range rate scale factor	19.91 pps/fps
Range rate accuracy	±1 fps, 3σ random ±1 fps, bias
Complete acquisition time (range and range rate)	15 seconds
Angular accuracy	

Range	Maximum error (mr) Random	Bias
400 nm	5.3	8
300 nm	5.[illegible]	8
200 nm	4.8	8
5 nm	4.7	8
2 nm	8.7	8
1 nm	10	8
80 feet	10	8

Angle rate accuracy	
Range	Maximum error
400 nm	0.4 mr/sec
100 nm to 80 feet	0.2 mr/sec

Transponder	
Antenna	4-inch Y-horn, linearly polarized, 12-inch interconnecting waveguide
Transmitted frequency	9792 mc (RR frequency 9832.8 mc x 240/241)
Received frequency	9832.8 mc ± one-way Doppler
Coherence ratio	240/241

Table 2.2-2. Rendezvous Radar and Transponder - Performance and Design Data (cont)

Transponder (cont)	
Radiated power	300 mw
Antenna coverage	160° by 105° (fixed position on CSM)
Acquisition time	1.8 seconds with 98% probability, with -123-db signal at antenna (range: 400 nm)
Intermediate frequencies	
First IF	40.8 mc
Second IF	6.8 mc
Modulation	PM by three tones (200 cps, 6.4 kc, 204.8 kc)
Range	80 feet to 400 nm
Weight	16.0 pounds
Input power	75 watts
Heater	20 watts (maximum)

Table 2.2-3. Landing Radar - Performance and Design Data

Velocity sensor	Continuous-wave, three-beam
Radar altimeter	CW/FM
Altitude capability	40,000 feet
Velocity capability	Acquisition at 24,000-foot altitude
Weight (approx)	43.5 pounds
Power consumption	125 watts dc (nominal) 147 watts dc (maximum - with tilt mechanism operating) 132 watts dc (maximum - steady-state)
Heater power consumption	63 watts dc (maximum) at 28 volts dc
Altimeter antenna	
Type	Planar array, space-duplexed
Gain (two-way)	50.4 db
RF power	100 mw (minimum)
Beamwidth (two-way)	3.9° E-plane 6.5° H-plane
Velocity sensor antenna	
Type	Planar array, space-duplexed
Gain (two-way)	49.2 db

Table 2.2-3. Landing Radar - Performance and Design Data

Velocity sensor antenna (cont)	
RF power	200 mw (minimum)
Beamwidth (two-way)	3.67° E-plane 7.34° H-plane
Transmitter	
Velocity sensor frequency	10.510 kmc ±5 mc
Altimeter frequency	9.580 kmc ±5 mc
Warmup time	1 minute
FM sweep duration	0.007 second
Acquisition time	
Velocity sensor	12 seconds (maximum)
Altimeter	12 seconds (maximum)
Primary power	25 to 31.5 volts dc (nominal) 3.5 to 6.5 amperes
Electronics assembly temperature range	-20° to +110° F

2.2.6 OPERATIONAL LIMITATIONS AND RESTRICTIONS.

2.2.6.1 Rendezvous Radar.

The operational limitations and restrictions for the RR are as follows:

- For accurate updating of AGS state vectors, using the RR, the separation distance between the LM and the CSM must not exceed 100 nm.
- The RR antenna must be positioned for minimum interference with the alignment optical telescope (AOT) when performing inertial measurement unit (IMU) alignment; otherwise, the RR occults a large portion of the AOT field of view. The minimum position for the RR antenna is orientation No. I (shaft angle of -77.2°, trunnion angle of 0°).
- If the RR antenna has been unstowed (for instance, to use the AOT), it cannot be restowed from inside the LM.
- The HEATERS: RNDZ RDR - OPR circuit breaker (panel 11) must be closed 2.5 hours before the RR is used. If the RR temperature is not increased from survival heating level to operating heating level, the RR may be inoperative or its performance may be degraded.
- Mechanical movement of the RR shaft cannot exceed +68° and -148° referenced to the X-axis, due to mechanical stops. Trunnion-axis movement is restricted from -70° to -110° about the +Z-axis.
- When switching the RR antenna from orientation No. I to orientation No. II, 35 to 45 seconds must be allowed for slewing the antenna.

- Manual operation of the RR antenna is only available in orientation No. I. If this restriction is not observed, readout of antenna angles is impossible, because display of RR antenna angles is restricted to orientation No. I.

- The RR must be operated within joint specification restrictions on timeline and thermal inputs into the antenna assembly. Components will overheat, resulting in degraded operation or possible complete loss of the RR, if operational limitation is not adhered to.

- Before any LGC-controlled maneuver based on RR angular data, 15 minutes of continuous tracking must be completed by the RR. The LGC must compensate for RR-IMU angular misalignment (bias) error. If this requirement is not observed, inaccurate data is fed to the LGC, resulting in excessive fuel consumption.

- During RR-IMU bias determination, the LM-CSM LOS must be within 30° of the LM +Z-axis. If this requirement is not observed, computation of required ΔV corrections is degraded, resulting in excessive use of the RCS.

- If electromagnetic interference (EMI) in system is identified as caused by the tracking light (regular pulses on audio channel or pulses at approximately 1 pps on SIGNAL STRENGTH meter), the tracking light may be turned off until acquisition of data is complete.

- While on the moon, the RR antenna should be pointed away from the lunar surface, with the antenna boresight approximately parallel to the X-axis. This is required only for a landing near the sub-solar point. Exceptions to this are when the RR is tracking the CSM and during AOT operation. Possible damage to the RR due to thermal overload will result in degraded performance if this restriction is not observed. The antenna assembly temperature should not be allowed to exceed 75° F when power is off.

2.2.6.2 Landing Radar.

The operational restrictions and limitations for the LR are as follows:

- The LR must be allowed to warm up for 1.5 minutes for temperature stabilization; otherwise, degraded and changing output will result.

- The LR must be operated within a specific mission timeline; otherwise, the components will overheat and degraded operation or possible loss of the LR will result.

2.3 MAIN PROPULSION SUBSYSTEM.

2.3.1 INTRODUCTION.

The Main Propulsion Subsystem (MPS) consists of the descent propulsion section (DPS) (figure 2.3-1) and the ascent propulsion section (APS). Each section is complete and independent of the other and consists of a liquid-propellant rocket engine with its own propellant storage, pressurization, and feed components. The DPS provides the thrust to control descent to the lunar surface. The APS provides the thrust for ascent from the lunar surface. In case of mission abort, the APS and/or DPS can place the LM into a rendezvous trajectory with the CSM from any point in the descent trajectory; there is a deadman zone immediately above the lunar surface, where abort cannot be accomplished. The choice of engine to be used depends on the cause for abort, on how long the descent engine has been operating, and on the quantity of propellant remaining in the descent stage.

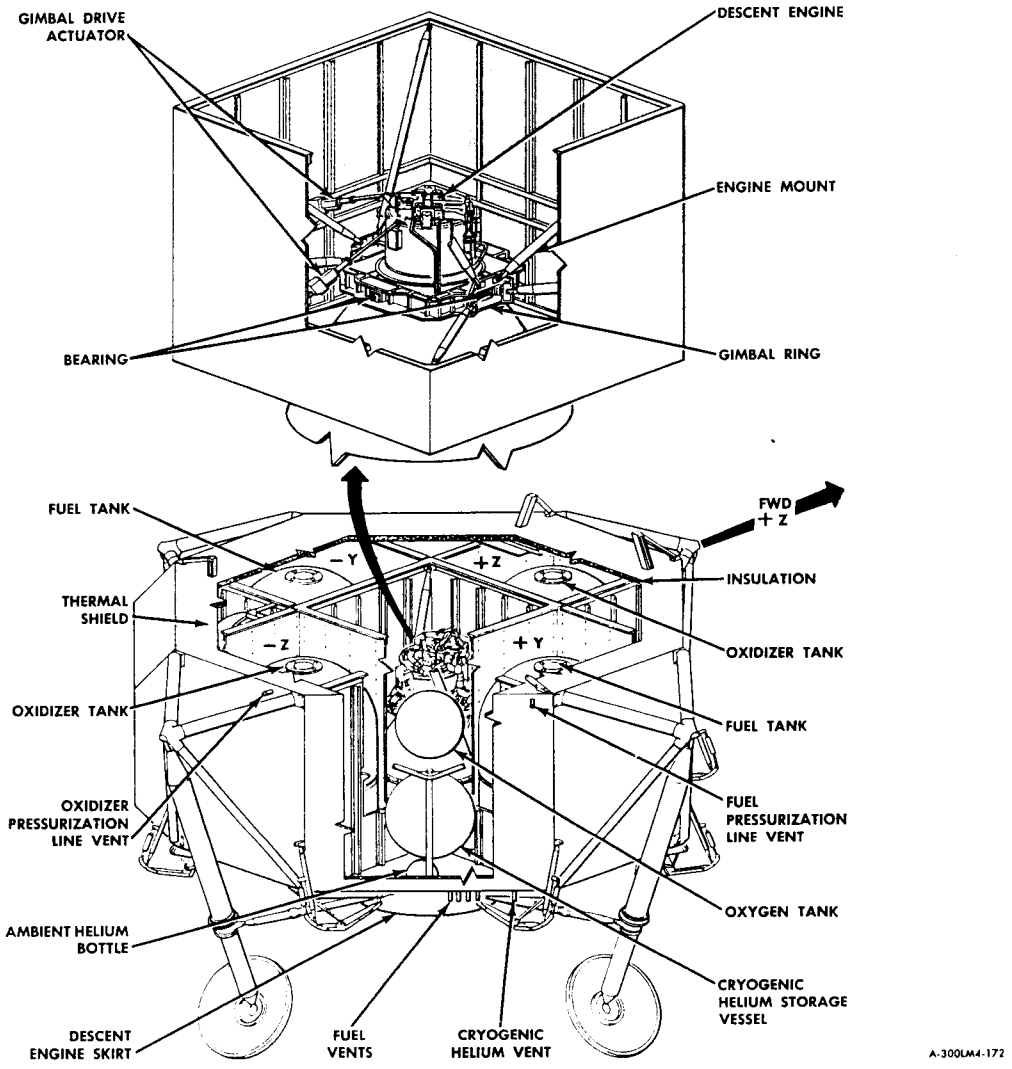

Figure 2.3-1. Descent Propulsion Section - Component Location

Both propulsion sections use identical hypergolic propellants: a 50-50 mixture, by weight, of hydrazine (N_2H_4) and unsymmetrical dimethylhydrazine (UDMH) as the fuel; nitrogen tetroxide (N_2O_4), as the oxidizer. The injection ratio of oxidizer to fuel is approximately 1.6 to 1, by weight.

Basic operation of the two propulsion sections is similar. In each section, gaseous helium forces the propellants from their tanks, through propellant shutoff valves, to the engine injectors. The DPS uses supercritical helium for propellant pressurization; the APS uses ambient gaseous helium. The primary reason for using supercritical helium is the weight saving. Both the descent and ascent engine assemblies consist of a combustion chamber, where the propellants are mixed and burned; an injector that determines the spray pattern of the propellants injected into the combustion chamber; and propellant control valves and orifices that meter, start, and stop propellant flow to the engine upon command. The descent engine, which is larger and produces more thrust than the ascent engine, is throttleable for thrust control and is gimbaled for thrust vector control. The ascent engine is neither throttleable nor gimbaled. Redundancy of vital components in both propulsion sections provides a high reliability factor.

Before starting the descent or ascent engine, proper propellant settling must be established. This is accomplished by moving the LM in the +X-direction to cause the propellants to settle at the bottom of the tanks. As the propellants are consumed, tank ullage increases and more propellant settling time is required for each subsequent engine start. The +X-translation is accomplished by operating the Reaction Control Subsystem (RCS) downward-firing thrust chamber assemblies (TCA's). Two or all four downward-firing TCA's can be selected, depending upon whether RCS propellant conservation (two TCA's) or a shorter RCS firing time (four TCA's) is the major consideration.

2.3.2 DESCENT PROPULSION SECTION INTERFACES. (See figure 2.3-2.)

The DPS receives 28-volt d-c and 115-volt a-c primary power through the Commander's and LM Pilot's buses of the Electrical Power Subsystem (EPS). The outputs of the DPS pressure and temperature transducers and liquid-level sensors are processed in the Instrumentation Subsystem (IS) and are transmitted via the Communications Subsystem (CS) to MSFN. The IS also processes the DPS caution and warning and display signals. The Explosive Devices Subsystem (EDS) opens explosive valves in the DPS to enable propellant tank pressurization and venting.

The Guidance, Navigation and Control Subsystem (GN&CS) issues automatic on and off commands, gimbal drive actuator commands, and thrust level commands to the descent engine. The automatic on and off commands and thrust level commands can be overriden manually. Descent engine arming and ignition are controlled by automatic guidance equipment, or by the astronauts through the stabilization and control (S&C) control assembly and the descent engine control assembly (DECA). A descent engine arm signal is sent to the S&C control assembly when an astronaut sets the ENG ARM switch (panel 1) to DES or when he presses the ABORT pushbutton (panel 1) preparatory to starting a mission abort program, using the descent engine. Engine-on signals from the LM guidance computer (LGC) or abort guidance section (AGS) are sent to the DECA through the S&C control assembly. The DECA turns the descent engine on upon receiving the arm and the engine-on signals. If DECA power fails, the DES ENG CMD OVRD switch (panel 3), in the ON position, will supply an alternate voltage source to keep the engine firing. The engine remains on until the engine-off command is received from the automatic guidance equipment. The astronauts can also generate engine on and off commands manually; these commands override the automatic commands. A manual start is accomplished (after propellant tank pressurization with ambient helium) by arming the descent engine and pressing the START pushbutton (panel 5). Either astronaut can shut off the descent engine by pressing his STOP pushbutton (panels 5 and 6) or by pressing the ABORT STAGE pushbutton (panel 1). An abort-stage command results in immediate descent engine shutdown, automatically followed by ascent propellant tank pressurization, and enabling of circuitry for stage separation and ascent engine firing. Stage separation and ascent engine firing occurs when the ascent engine-on command is issued.

Descent engine throttling is controlled by the LGC or the astronauts. The throttling-range limitations are from minimum thrust (approximately 10% of 10,500 pounds) to approximately 65% and full throttle (approximately 92.5%). The range between 65% and 92.5% is a transient region that cannot be used for extended periods because excessive engine erosion occurs in this zone. Under normal conditions, the engine cannot be operated in the transient region because automatic throttle commands above 65% automatically produce a full throttle output. Only in case of malfunction can inadvertent throttling occur in the transient region, in which case manual correction must be made. Automatic throttle increase and decrease signals from the LGC are sent to an integrating counter in the DECA. The

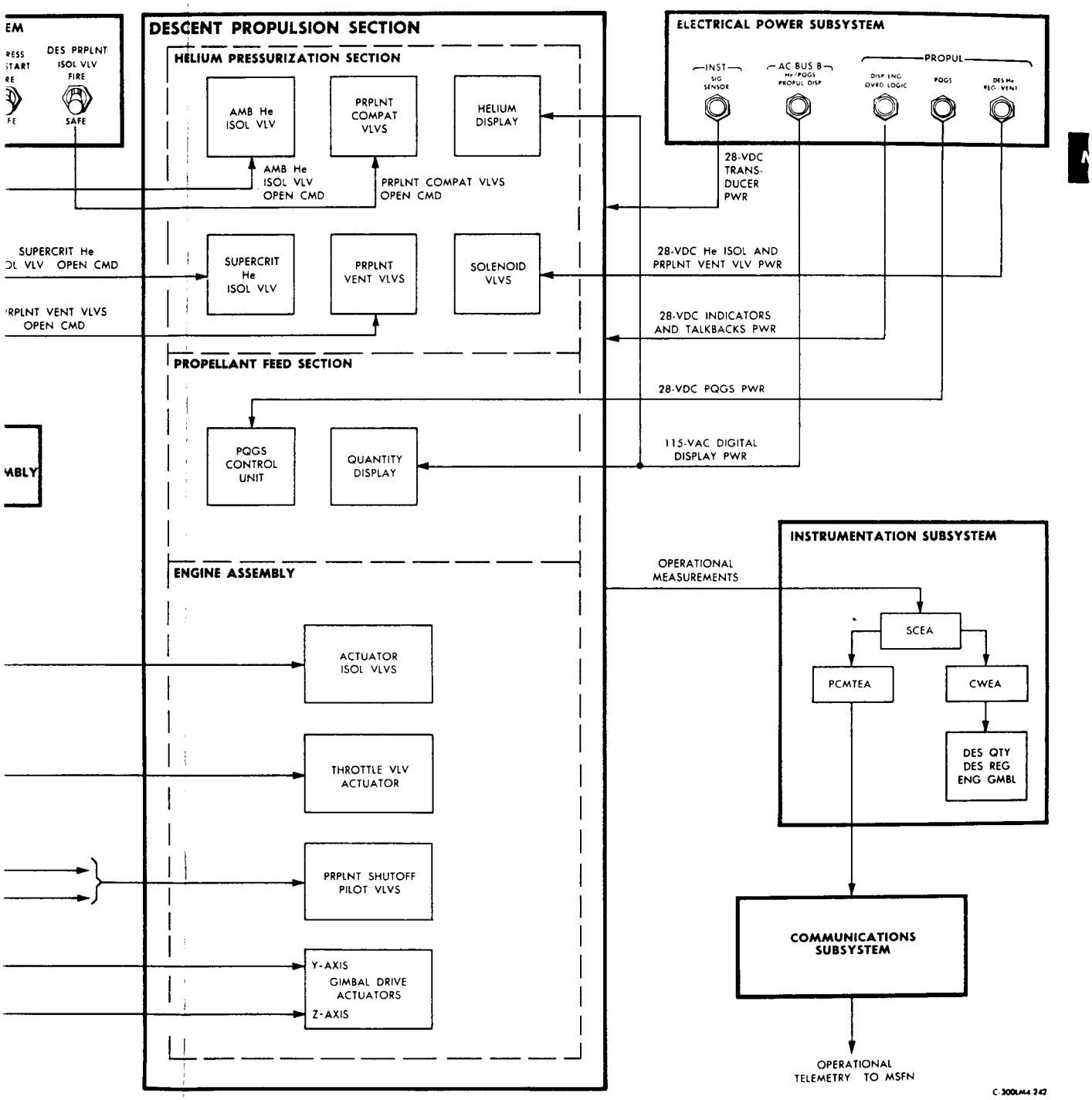

Figure 2.3-2. Descent Propulsion Section - Interface Diagram

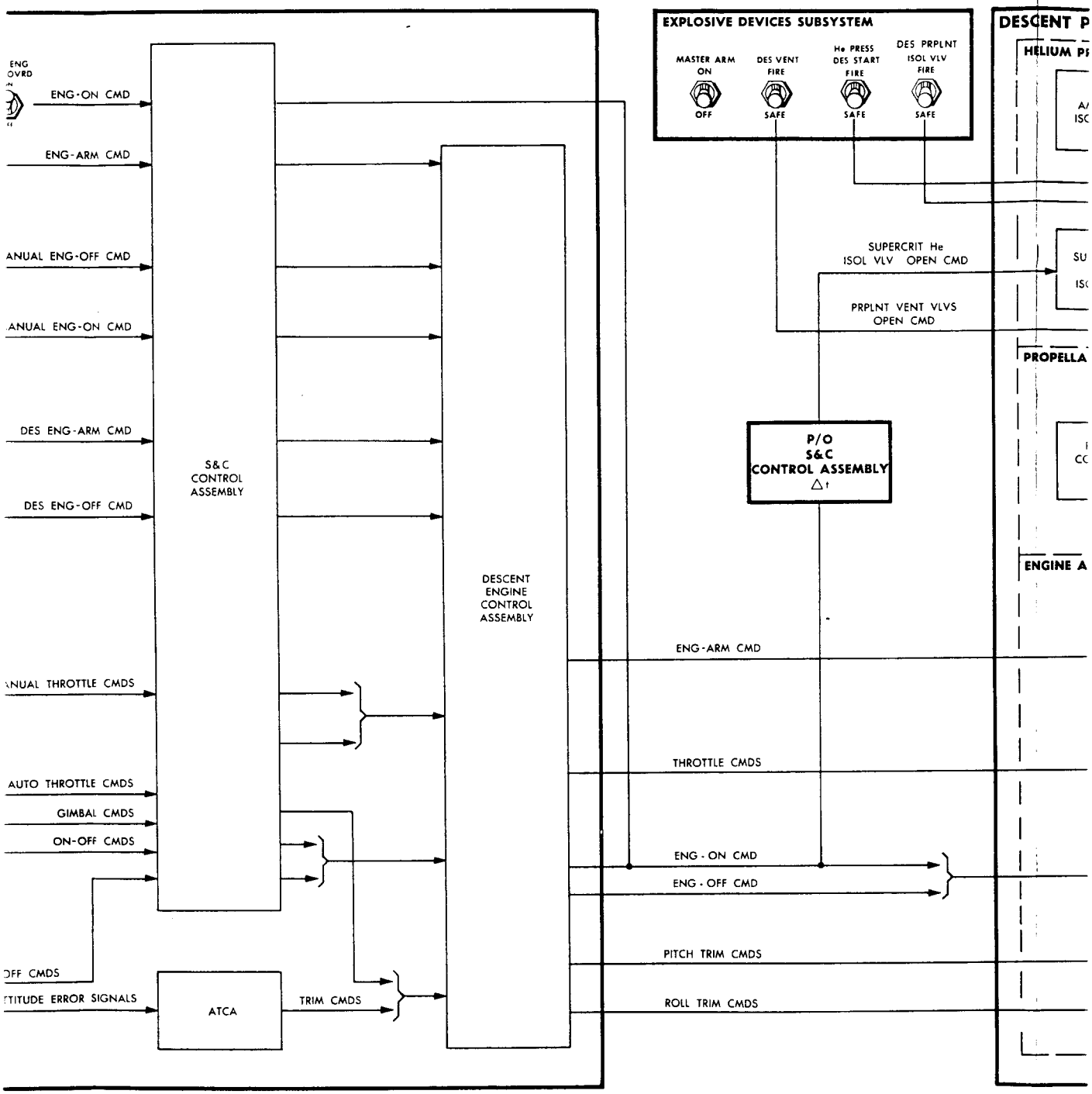
ENG OVRD
ENG-ON CMD
ENG-ARM CMD
ANUAL ENG-OFF CMD
ANUAL ENG-ON CMD
DES ENG-ARM CMD
DES ENG-OFF CMD
NUAL THROTTLE CMDS
AUTO THROTTLE CMDS
GIMBAL CMDS
ON-OFF CMDS
OFF CMDS
TITUDE ERROR SIGNALS
S&C CONTROL ASSEMBLY
ATCA
TRIM CMDS
DESCENT ENGINE CONTROL ASSEMBLY
EXPLOSIVE DEVICES SUBSYSTEM
MASTER ARM ON
OFF
DES VENT FIRE
SAFE
He PRESS DES START FIRE
SAFE
DES PRPLNT ISOL VLV FIRE
SAFE
SUPERCRIT He ISOL VLV OPEN CMD
PRPLNT VENT VLVS OPEN CMD
P/O S&C CONTROL ASSEMBLY
Δt
ENG-ARM CMD
THROTTLE CMDS
ENG-ON CMD
ENG-OFF CMD
PITCH TRIM CMDS
ROLL TRIM CMDS
DESCENT P
HELIUM P
PROPELLA
ENGINE A

Mission

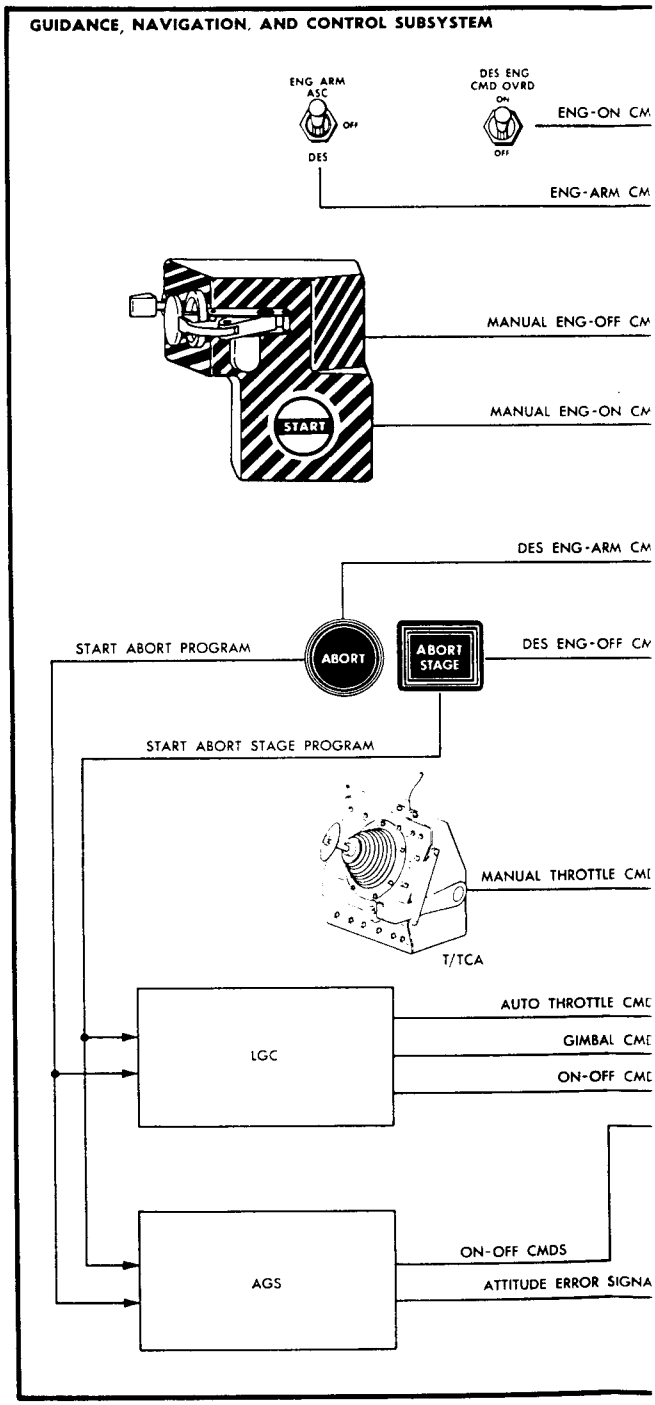
GUIDANCE, NAVIGATION, AND CONTROL SUBSYSTEM
ENG ARM
ASC
OFF
DES
DES ENG
CMD OVRD
ON
OFF
ENG-ON CM
ENG-ARM CM
MANUAL ENG-OFF CM
START
MANUAL ENG-ON CM
DES ENG-ARM CM
START ABORT PROGRAM
ABORT
ABORT STAGE
DES ENG-OFF CM
START ABORT STAGE PROGRAM
MANUAL THROTTLE CMD
T/TCA
LGC
AUTO THROTTLE CMD
GIMBAL CMD
ON-OFF CMD
AGS
ON-OFF CMDS
ATTITUDE ERROR SIGNA

analog output of the DECA controls descent engine thrust. In the automatic mode, the thrust/translation controller assemblies (TTCA's) can be used by the astronauts to increase descent engine throttle (overriding the automatic throttle command); the TTCA's cannot be used, however, to decrease the throttle command. (Refer to paragraph 2.3.3.3.1.) In the manual throttle mode, the astronauts have complete control over descent engine thrust.

The primary guidance and navigation section (PGNS) of the GN & CS, or the AGS, automatically controls descent engine gimbal trim, to compensate for center-of-gravity offsets during descent engine firing. In PGNS operation, the LGC sends trim on and off signals in two directions, for each gimbal axis, to the DECA. These signals operate power control circuitry, which drives the two gimbal drive actuators (GDA's). In AGS operation, Y- and Z-axis error signals from the attitude and translation control assembly (ATCA) are sent to the DECA to drive the GDA's. The GDA's tilt the descent engine along the Y-axis and Z-axis a maximum of 6° from the center position. The ENG GMBL switch (panel 3) permits removing GDA power to interrupt the tilt capability if the ENG GMBL caution light (panel 2) goes on, indicating a malfunction.

The DPS modes of operation are discussed in detail in paragraph 2.1.3.5. The control circuitry is shown in figure 2.1.18.

2.3.3 DESCENT PROPULSION SECTION FUNCTIONAL DESCRIPTION.

The DPS consists of an ambient helium bottle and a cryogenic helium storage vessel with associated helium pressurization components; two fuel and two oxidizer tanks with associated feed components; and a pressure-fed, ablative, throttleable rocket engine. The engine can be shut down and restarted, within operational limitations and restrictions (paragraph 2.3.6), as required by the mission. At the fixed full-throttle position, the engine develops a nominal thrust of 9,870 pounds; it can also be operated within a nominal range of 1,050 to 6,800 pounds of thrust.

The engine is mounted in the center compartment of the descent stage cruciform; it is suspended, at the throat of the combustion chamber, on a gimbal ring that is part of the engine assembly. The gimbal ring is pivoted in the descent stage structure, along an axis normal to that of the engine pivots. The engine can be tilted up to +6° or -6°, by means of the GDA's, to ensure that the thrust vector passes through the LM center of gravity.

Functionally, the DPS can be subdivided into a pressurization section, a propellant feed section, and an engine assembly.

2.3.3.1 Pressurization Section. (See figure 2.3-3.)

Before earth launch, the propellant tanks are only partly pressurized, so that the tanks will be maintained within a safe pressure level under the temperature changes that can occur between the time the tanks are loaded and launch. Before initial engine start, the ullage space in each propellant tank requires additional pressurization. This initial pressurization (prepressurization) is accomplished with ambient helium. (Supercritical helium cannot be used because the helium circulating through the fuel/helium heat exchanger may freeze the fuel before fuel flow is established.) A pressure transducer at the outlet port of the ambient helium bottle supplies a signal through the HELIUM MON selector switch (panel 1), when set to AMB PRESS, to the HELIUM indicator (panel 1) to enable the astronauts to check the status of the bottle before initial engine start. The propellant tanks are prepressurized by opening explosive valves in the ambient helium line and in the lines leading to the fuel and oxidizer tanks. The valve in the ambient helium line prevents helium flow from the storage bottle before prepressurization. The compatibility valves in the lines leading to the fuel and oxidizer tanks prevent propellant vapors from degrading the upstream components due to prolonged exposure before pressurization.

After setting the MASTER ARM switch (panel 8) to ON, the DES PRPLNT ISOL VLV switch (panel 8) is set to FIRE to open the fuel and oxidizer compatibility valves. The DES START He PRESS switch (panel 8) is then set to FIRE, opening the ambient helium isolation explosive valve. Ambient helium flows from the storage bottle through the open explosive valve and through a filter, where debris from the explosive valve is trapped. The ambient helium enters the main pressurization line downstream

of the normally closed helium isolation solenoid valve and flows through the secondary pressure regulator where pressure is reduced to approximately 245 psi. The regulated ambient helium then e the propellant tanks to provide the normal ullage pressure.

After pressurization with ambient helium, the supercritical helium from the cryogenic storage vessel is used to maintain ullage pressure. Supercritical helium is stored at a density approximately eight times that of ambient helium. Because heat transfer from the outside to the inside of the cryogenic storage vessel causes a gradual increase in pressure (approximately 6 to 10 psi per hour, depending on ambient conditions). Only a component malfunction, a significant time slippage, or a change in the predetermined burn profile can cause the supercritical helium to approach, or exceed, the limits of the pressure/time envelope. An out-of-limit condition may result in rupture of the dual burst disks which may cause the descent engine to operate in a blowdown mode. (The period of engine operation in the blowdown mode depends upon the amount of ullage volume present.)

The cryogenic storage vessel is isolated by an explosive valve, which is fired automatically after an engine-on command has been given. With the ENG ARM switch (panel 1) set to DES, the engine-on command can be given manually by pressing the START pushbutton (panel 5), or it can be given automatically by the LGC or AGS. In either case, the MASTER ARM switch must be in the ON position to fire the explosive valve. A delay circuit causes a 1.3-second delay between opening of the propellant shutoff valves and firing of the supercritical helium isolation explosive valve. This time delay prevents the supercritical helium from entering the fuel/helium heat exchanger until fuel flow is established so that freezing of the fuel in the heat exchanger cannot occur.

The supercritical helium initially passes through the first loop of the two-pass fuel/helium heat exchanger. Here it absorbs heat from the fuel that is routed from the fuel tanks through the heat exchanger, before ultimate delivery to the engine. The helium is warmed to approximately -200° F and routed back through the helium/helium heat exchanger inside the cryogenic helium storage vessel. The -200° F helium transfers heat to the remaining supercritical helium in the vessel, causing an increase in pressure in the vessel that ensures continuous expulsion of helium throughout the entire period of operation. After passing through the helium/helium heat exchanger, where it is cooled to approximately -300° F, the helium is routed back through the second loop of the fuel/helium heat exchanger and heated to approximately +35° F before delivery to the pressure regulators.

With the supercritical helium pressurization system operating, the pressure in the cryogenic helium storage vessel varies between 400 and 1,750 psia. The pressure is monitored on the HELIUM indicator when the HELIUM MON selector switch is set to SUPCRIT PRESS. The cryogenic storage vessel is protected against overpressurization by a dual burst disk assembly. If an excessive heat transfer through the vessel wall increases the internal pressure above approximately 1,900 psid, the burst disks rupture and the entire helium supply is lost. A normally open vent relief valve between the two burst disks protects against back pressurization of the upstream burst disk if it develops a small leak. If a large leak develops, the vent relief valve closes and the downstream burst disk protects the storage vessel. A thrust neutralizer at the outlet of the downstream burst disk prevents generation of unidirectional thrust if the burst disks rupture.

Downstream of the fuel/helium heat exchanger, the helium flow continues through a filter that traps debris from the explosive valve, then the pressurization line divides into two parallel legs. A normally open, latching solenoid valve and a pressure regulator are in series in the primary leg; a normally closed, latching solenoid valve is in series with a pressure regulator in the secondary leg. The pressure of the helium flowing through the primary leg is reduced by the pressure regulator to the nominal pressure (245 psia) required to pressurize the propellant tanks. If this regulator fails open or closed, pressure at the helium manifold increases or decreases accordingly beyond acceptable limits (rises above 260 psia or drops below 220 psia) and the DES REG warning light (panel 1) goes on. When a caution or warning light goes on, a signal is routed from the caution and warning electronics assembly (CWEA) in the IS to light the MASTER ALARM pushbutton/lights (panels 1 and 2) and to provide a 3-kc tone in the astronaut headsets. Pressing either MASTER ALARM pushbutton turns off both lights and terminates the tone, but has no effect on the caution or warning light. (The DES REG warning light is inhibited before initial descent engine arming. It will go off when normal pressure is restored when the CWEA

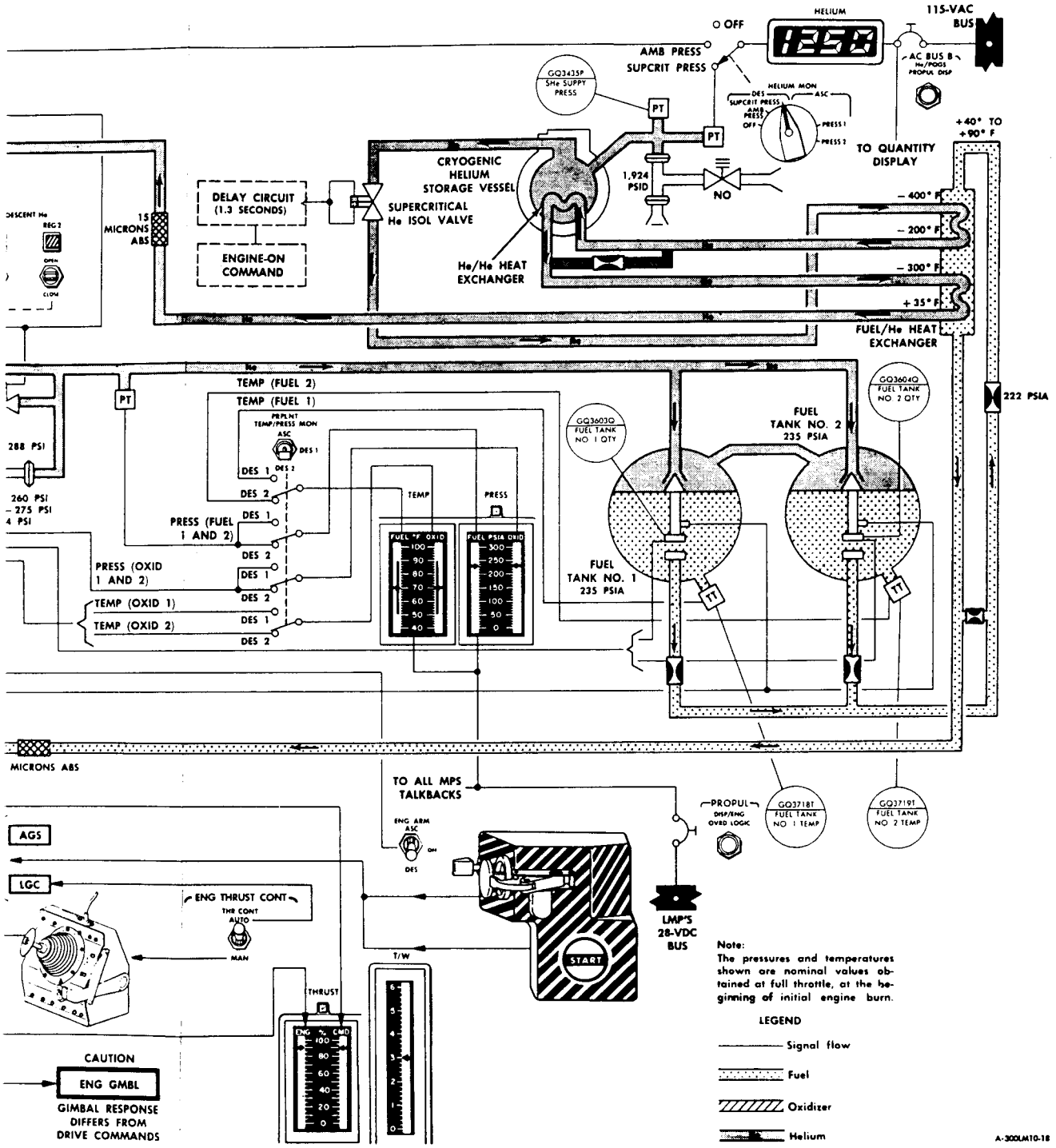

Figure 2.3-3. Descent Propulsion Section - Simplified Functional Flow Diagram

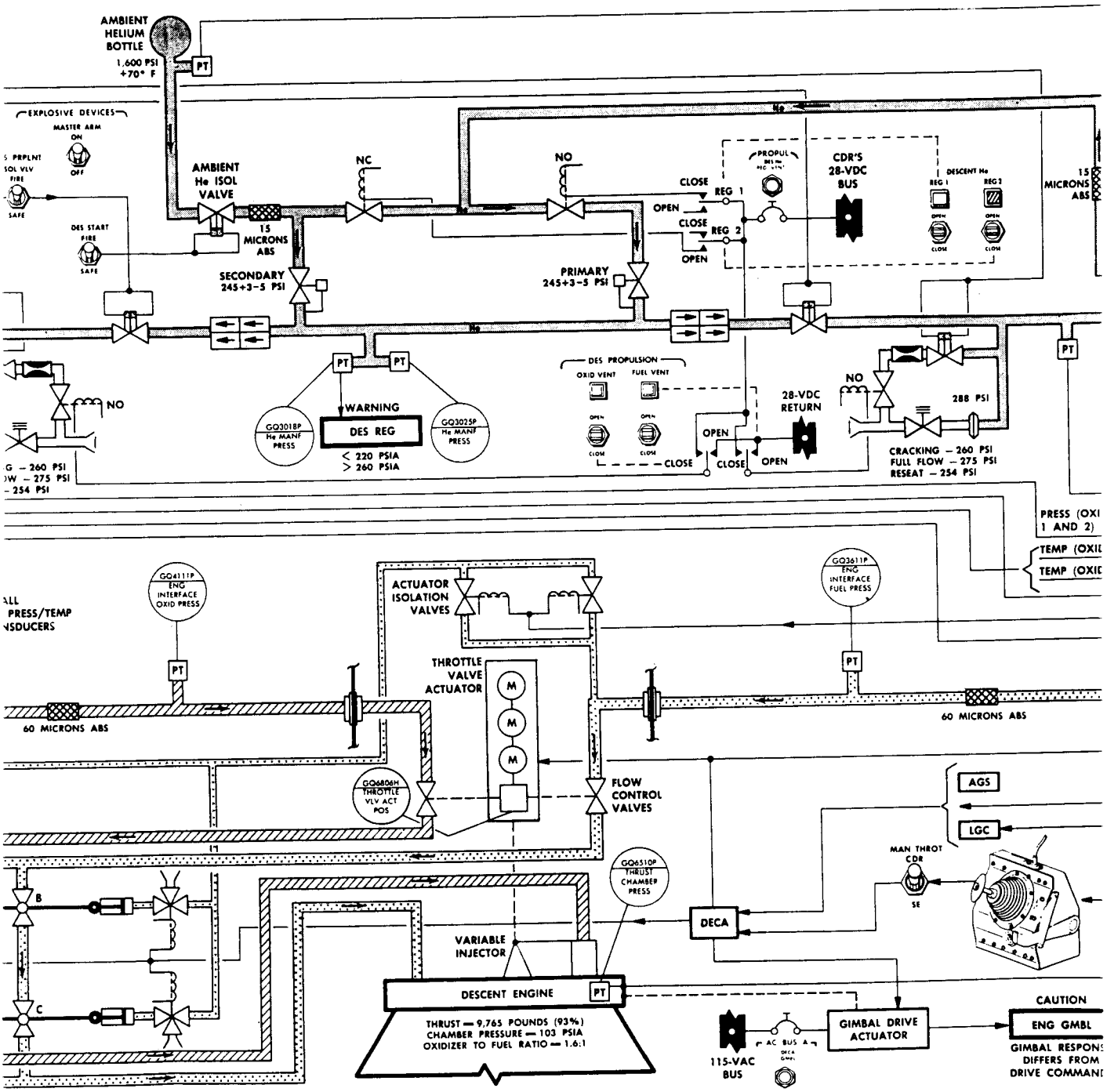
AMBIENT HELIUM BOTTLE
1,600 PSI +70° F
PT
EXPLOSIVE DEVICES
MASTER ARM
ON
OFF
DES START FIRE
SAFE
AMBIENT He ISOL VALVE
NC
NO
15 MICRONS ABS
SECONDARY 245+3-5 PSI
PRIMARY 245+3-5 PSI
He
CLOSE
OPEN
REG 1
REG 2
PROPUL
CDR'S 28-VDC BUS
DESCENT He
15 MICRONS ABS
DES PROPULSION
OXID VENT
FUEL VENT
28-VDC RETURN
288 PSI
CRACKING – 260 PSI
FULL FLOW – 275 PSI
RESEAT – 254 PSI
WARNING
DES REG
< 220 PSIA
> 260 PSIA
GQ3018P He MANF PRESS
GQ3025P He MANF PRESS
PRESS (OXI 1 AND 2)
TEMP (OXID
TEMP (OXID
GQ4111P ENG INTERFACE OXID PRESS
GQ3611P ENG INTERFACE FUEL PRESS
ACTUATOR ISOLATION VALVES
THROTTLE VALVE ACTUATOR
M
60 MICRONS ABS
GQ6806H THROTTLE VLV ACT POS
FLOW CONTROL VALVES
AGS
LGC
MAN THROT CDR
SE
GQ6510P THRUST CHAMBER PRESS
DECA
VARIABLE INJECTOR
DESCENT ENGINE
THRUST — 9,765 POUNDS (93%)
CHAMBER PRESSURE — 103 PSIA
OXIDIZER TO FUEL RATIO — 1.6:1
115-VAC BUS
AC BUS A
GIMBAL DRIVE ACTUATOR
CAUTION
ENG GMBL
GIMBAL RESPONS
DIFFERS FROM
DRIVE COMMAND

M

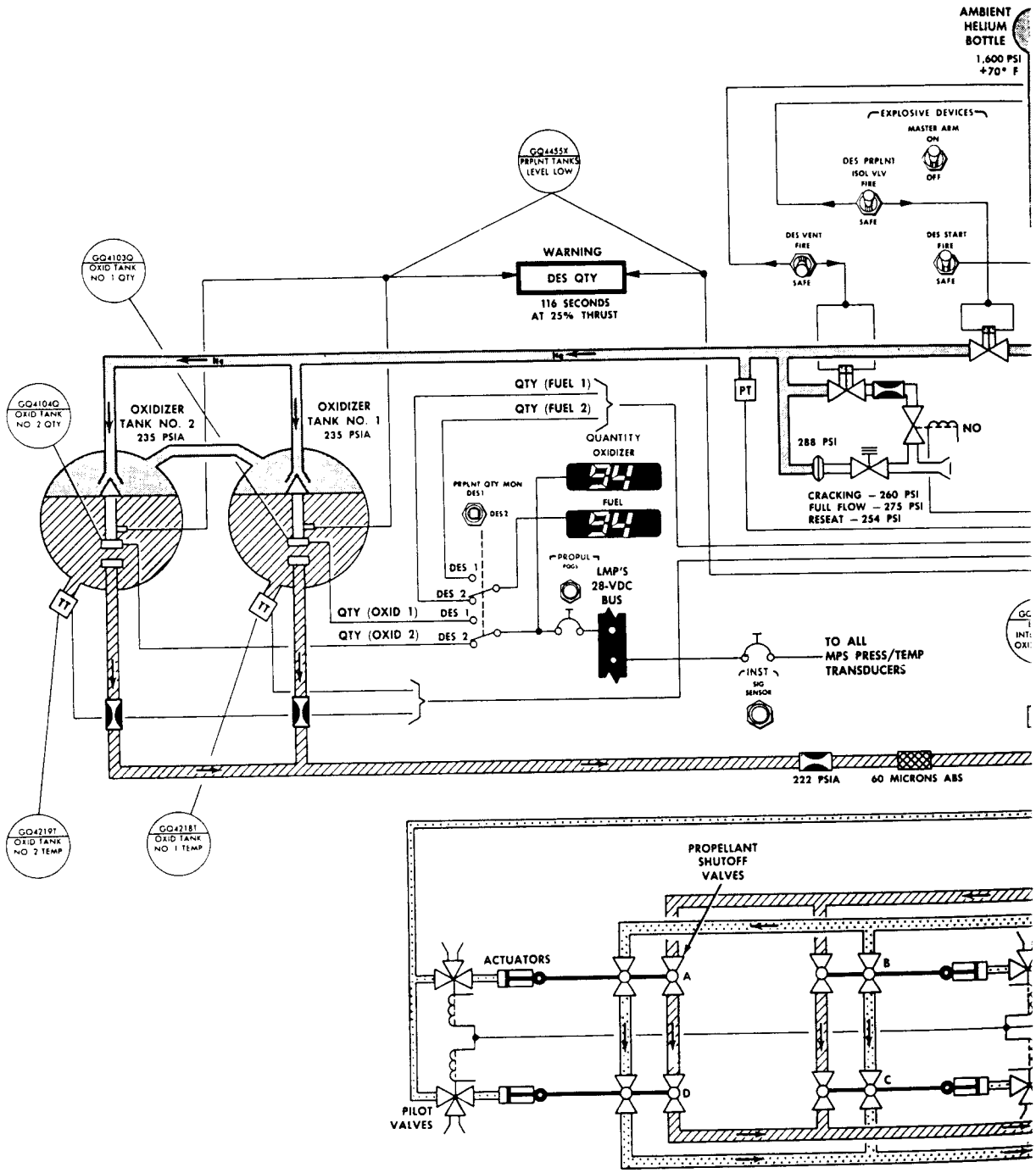
AMBIENT HELIUM BOTTLE
1,600 PSI +70° F
EXPLOSIVE DEVICES
MASTER ARM
ON
OFF
DES PRPLNT ISOL VLV
FIRE
SAFE
DES VENT
FIRE
SAFE
DES START
FIRE
SAFE
GQ4455X
PRPLNT TANKS LEVEL LOW
WARNING
DES QTY
116 SECONDS AT 25% THRUST
GQ4103Q
OXID TANK NO 1 QTY
GQ4104Q
OXID TANK NO 2 QTY
OXIDIZER TANK NO. 2
235 PSIA
OXIDIZER TANK NO. 1
235 PSIA
QTY (FUEL 1)
QTY (FUEL 2)
QUANTITY
OXIDIZER
FUEL
PRPLNT QTY MON
DES1
DES2
DES 1
DES 2
QTY (OXID 1)
QTY (OXID 2)
PROPUL
LMP'S
28-VDC
BUS
PT
288 PSI
NO
CRACKING – 260 PSI
FULL FLOW – 275 PSI
RESEAT – 254 PSI
INST
SIG SENSOR
TO ALL MPS PRESS/TEMP TRANSDUCERS
222 PSIA
60 MICRONS ABS
GQ42197
OXID TANK NO 2 TEMP
GQ42181
OXID TANK NO 1 TEMP
PROPELLANT SHUTOFF VALVES
ACTUATORS
PILOT VALVES
A
B
C
D

circuit breaker is cycled, or when the ascent and descent stages separate.) Under regulator failure conditions, the astronauts must close the solenoid valve in the malfunctioning leg and open the solenoid valve in the redundant leg, to restore normal propellant tank pressurization. The normally open (primary) solenoid valve is closed by momentarily setting the DESCENT He REG 1 switch (panel 1) to CLOSE; the DESCENT He REG 1 talkback above the switch then provides a barber-pole display. The normally closed (secondary) solenoid valve is opened by momentarily setting the DESCENT He REG 2 switch to OPEN; the DESCENT He REG 2 talkback above the switch then provides a gray display. (Both solenoid valves may be closed during the coast periods of descent, to prevent inadvertent tank overpressurization due to possible helium leakage through the pressure regulators and to inhibit leaks downstream of the latching valves.)

The primary and secondary helium flow paths merge downstream of the regulators to form a common helium pressurization manifold. Transducers monitor the manifold pressure; they provide continuous telemetry signals to MSFN, and signals that cause the DES REG warning light to go on when the sensed pressure exceeds 260 psia or drops below 220 psia. The manifold routes the helium into two flow paths: one path leads to the oxidizer tanks; the other, to the fuel tanks. Each path has a quadruple check valve assembly in a series-parallel arrangement. The quadruple check valves isolate the upstream components from the corrosive propellant vapors and prevent hypergolic action, as a result of backflow from the propellant tanks, in the helium pressurization manifold. After passing through the compatibility explosive valves, the helium flows into the top of the fuel and oxidizer tanks. Diffusers at the top of the tanks uniformly distribute the helium throughout the ullage space. Helium crossover lines maintain a balanced ullage pressure in the tanks containing the same propellants.

Immediately upstream and in parallel with the propellant tanks, each helium flow path contains a relief valve assembly to protect the propellant tanks against overpressurization. The assemblies (a burst disk in series with a relief valve) vent pressure in excess of approximately 275 psia and reseal the flow paths after overpressurization is relieved (254 psia). Thrust neutralizers eliminate unidirectional thrust generated by the escaping gas. To prevent leakage through single point relief valves during normal operation, the burst disks are located upstream of the relief valves. The burst disks rupture at a pressure between 260 and 275 psi; the relief valves open fully at 275 psi to pass the entire helium flow from a failed-open regulator preventing damage to the propellant tanks.

Two vent lines, in parallel with the relief valve assemblies, include an explosive valve in series with a normally open solenoid valve for each propellant tank. The vent lines are intended for planned depressurization of the tanks after lunar landing, when temperature rise of the supercritical helium and heat soak-back from the engine (after shutoff) causes pressure buildup in the tanks. The planned venting arrangement protects the astronauts against untimely venting of the tanks through the relief valve assemblies. The fumes are vented overboard, through the relief valve thrust neutralizers at the fuel and oxidizer pressurization line vents. (See figure 2.3-1.) If the helium pressurization line is open, the supercritical helium in the cryogenic storage vessel will be vented together with the propellant tanks. The supercritical helium will vent rapidly until pressure drops to approximately 350 psia, then the pressure remaining in the cryogenic storage vessel will decrease with the decreasing propellant tank pressures. To open the vent lines, the MASTER ARM switch is set to ON and the DES VENT switch (panel 8) is set momentarily to FIRE, opening both explosive vent valves simultaneously. The MASTER ARM switch is then set to OFF. Venting of the lines is monitored by setting the PRPLNT TEMP/PRESS MON switch (panel 1) to DES 1 and the HELIUM MON selector switch (panel 1) to SUPCRIT PRESS. When the OXID PRESS indicator indicates less than 20 psia, the HELIUM MON selector switch is set to OFF, the OXID VENT switch is set to CLOSE, and the OXID VENT talkback will change to a barber-pole display. When the FUEL PRESS indicator indicates less than 8 psia, the FUEL VENT switch is set to CLOSE, causing the FUEL VENT talkback to provide a barber-pole display.

2.3.3.2 Propellant Feed Section. (See figure 2.3-3.)

Each pair of propellant tanks (containing like propellants) is manifolded into a common delivery line. Balanced propellant flow is maintained by trim orifices in all propellant lines downstream of the tanks.

Helium pressure in the propellant tanks is monitored on the FUEL and OXID PRESS indicators (panel 1), propellant temperature in the tanks is monitored on the FUEL and OXID TEMP indicators. The PRPLNT TEMP/PRESS MON switch selects the set of fuel and oxidizer tanks (No. 1 or No. 2) for monitoring. Each propellant tank has its own temperature transducer to supply temperature signals to the indicator. One pressure transducer in the fuel pressurization line and one in the oxidizer pressurization line supply pressure signals to the indicators. Therefore, the pressure reading remains constant regardless of whether tank No. 1 or 2 monitored. Propellant quantity remaining in the tanks is monitored on the OXIDIZER and FUEL QUANTITY indicators (panel 1). The PRPLNT QTY MON switch selects the set of fuel and oxidizer tanks (No. 1 or 2) for monitoring.

Pressurized helium, acting on the surface of the propellant, forces the fuel and oxidizer into the delivery lines through a propellant retention device that maintains the propellant in the delivery lines during negative-g acceleration (up to acceleration in excess of -2g). The oxidizer is piped directly to the engine assembly; the fuel circulates through the fuel/helium heat exchanger before it is routed to the engine assembly. A small bypass permits some fuel to reach the engine without flowing through the heat exchanger. This protects against a pressure buildup should the fuel in the heat exchanger be frozen. Each delivery line contains a trim orifice and a filter. The trim orifices provide engine interface pressure of approximately 222 psia at full throttle position for proper propellant use. The filters prevent debris, originating at the explosive valves or in the propellant tanks, from contaminating downstream components.

2.3.3.2.1 Propellant Quantity Gaging System. (See figure 2.3-4.)

The propellant quantity gaging system (PQGS) enables the astronauts to continuously monitor the quantity of propellants remaining in the four tanks. The PQGS is of the capacitance type. It consists of four quantity-sensing probes with low-level sensors, a control unit, two QUANTITY indicators, the PRPLNT QTY MON switch, and the DES QTY warning light. During a lunar-landing mission, the PQGS will be turned on approximately 10 seconds before engine ignition and shut off approximately 10 seconds after engine shutdown. The continuous PQGS power-on time is limited to 45 minutes. This limitation safeguards the thermal capability of the electronic components which, if exceeded, could result in erroneous indications. The PROPUL: PQGS circuit breaker (panel 16) is used to apply or remove PQGS power. The PRPLNT QTY MON switch selects a set of propellant tanks (fuel and oxidizer tanks No. 1 or 2) to be monitored on the FUEL and OXIDIZER QUANTITY indicators. With the PRPLNT QTY MON switch set to OFF, the QUANTITY indicators remain lit; however, the digital readouts on the indicators blank out. With the PRPLNT QTY MON switch set to DES 1 or DES 2 and the descent engine shut off, the QUANTITY indicator readings remain stable until a zero-g condition develops, at which time the readings drift and become indeterminate.

The low-level sensors provide a discrete signal to cause the DES QTY warning light to go on when the propellant level in any tank is down to 9.4 inches (equivalent to 5.6% propellant remaining, or sufficient for 116 seconds of engine burn at hover thrust (approximately 25%)). The MASTER ALARM pushbutton/light and the 3-kc tone are not activated when the DES QTY warning light is energized to prevent distraction of the astronauts during the most critical phase of the lunar landing mission. The PQGS has an estimated uncertainty tolerance of 1.3% of full tank capacity for cabin display and telemetry transmission. This tolerance is reduced to 1% in the 8% to 25% propellant quantity range where the PQGS performs at a higher accuracy.

The quantity-sensing probes are double-walled; one probe is installed to run vertically through the center of each propellant tank. Each probe has a 20-volt d-c input. Varying resistance, caused by propellant consumption, causes the output signal to vary from 5 volts dc to zero, in direct proportion to propellant quantity. The output signals, processed through the probe circuitry, are sent directly to the control unit which converts them to provide the following:

- Indications of the quantity of propellant remaining in the tanks, on the QUANTITY indicators
- Conditioned signals, corresponding to propellant quantities in each of the four tanks, to the telemetry registers
- A warning signal when the propellant in any of the four tanks is depleted to a predetermined level.

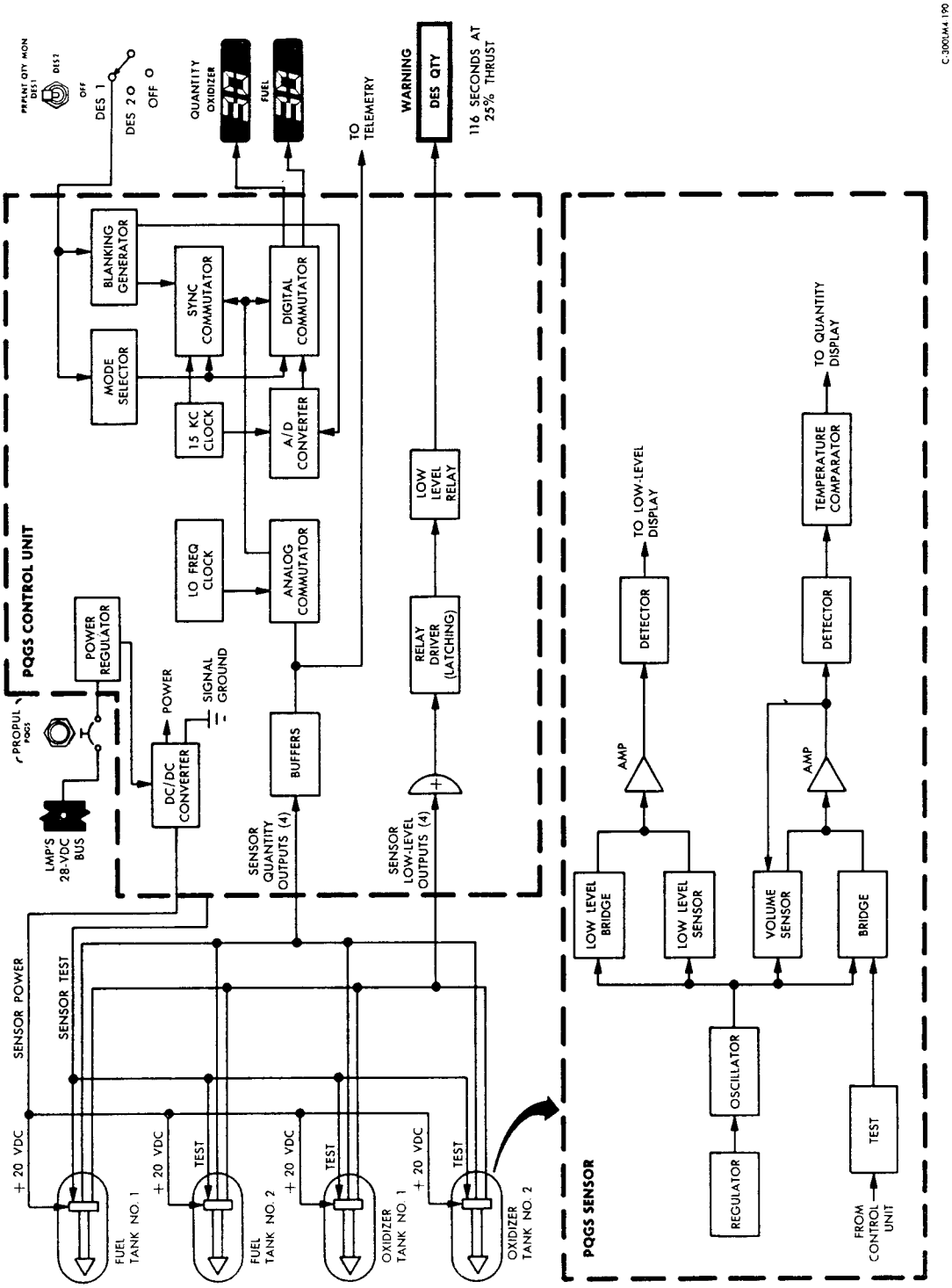

Figure 2.3-4. Propellant Quantity Gaging System - Simplified Functional Block Diagram

2.3.3.3 Engine Assembly. (See figures 2.3-5 and 2.3-6.)

Fuel and oxidizer enter the engine assembly through interface flanges on opposite sides of the engine. The fuel line has a tap-off branch (pilot valves actuation line) that leads through two actuator isolation valves (arranged in parallel for redundancy) to the four solenoid-operated pilot valves. The fuel in this line is routed, through the pilot valves, to the actuators, where it is used as actuation fluid to open the propellant shutoff valves. The main fuel and oxidizer flow is routed through respective flow control valves, then each flow path splits into two parallel paths that route the propellants through the redundant propellant shutoff valves. The propellant shutoff valve assemblies are in a series-parallel arrangement. The series redundancy prevents open failure; the parallel redundancy prevents closed failure. The valves open simultaneously to permit propellant flow to the engine while it is operating; they close simultaneously to terminate propellant flow at engine shutdown. At the two upstream fuel shutoff valves, venturis restrict the fuel flow so that the oxidizer reaches the injector between 40 and 50 milliseconds before the fuel. This precludes the possibility of a fuel lead, which would result in rough engine starts. Downstream of the propellant shutoff valves, the parallel paths merge to form one fuel and one oxidizer path. The fuel passes through a final trim orifice and enters the variable-area injector manifold, where a concentric annulus of fuel flow is formed. The oxidizer is routed, through the center element of the injector, to the combustion chamber, where it mixes with the fuel for combustion.

Before initial engine operation and during engine shutdown, the solenoid-operated actuator isolation valves (pre-valves) are closed to prevent possible fuel loss in the pilot valve actuation line due to leakage at the pilot valves. The actuator isolation valves are opened by setting the ENG ARM switch to DES. This enables the actuation fuel to flow to the pilot valves just before the pilot valves are opened. When the START pushbutton is pressed (or an engine-on command initiated), the four solenoid-operated pilot valves open simultaneously, permitting the actuation fuel to open the propellant shutoff valves, thus routing fuel and oxidizer to the combustion chamber. During the start, the solenoids in the pilot valves unseat the caged balls from the inlet ports and seat them against the overboard vent ports; fuel enters the actuator cavities. The actuator pistons are connected to rack-and-pinion linkages that rotate the balls of the shutoff valves 90° to the open position to permit propellant flow to the injector. The series-parallel redundancy in the valve arrangement provides for positive start and shutdown. During shutdown, the solenoids in the pilot valves are deenergized and the vent ports are open. The spring-loaded actuators close the shutoff valves. Residual actuation fuel is vented overboard through four separate lines that lead to vent ports at the bottom of the descent stage. (See figure 2.3-1.)

The propellant in the main fuel and oxidizer lines flows through cavitating-venturi-type flow control valves that control propellant flow to the engine below the 65% throttle setting. Transition from cavitation to noncavitation occurs between 70% and 80%. At full throttle, and during momentary transition through the full throttle to 65% range, engine throttling takes place primarily in the pintle assembly of the injector and in the flow control valves. At approximately 70% of maximum thrust, cavitation commences in the throats of the flow control valves, causing the valves to function as cavitating venturis down to minimum thrust. Once cavitation begins, the propellant-metering function is entirely removed from the injector; flow is controlled entirely by the flow control valves.

The throat area of the flow control valves is regulated by a close-tolerance, contoured, metering pintle that is linked directly to the injector sleeve. The linkage is operated by a single actuator so that movement of the actuator simultaneously adjusts the pintles in the flow control valves and the movable sleeve in the injector. The fuel and oxidizer are injected at velocities and angles compatible with variations in weight flow. At full throttle, engine operation is conventional. As the engine is throttled down, the pintles in the flow control valves are moved to decrease the flow control area in the venturis so that the pressure drop across the valves balances out the differential between engine and injector inlet pressures. At the same time, the injector orifice areas are decreased so that the injection velocities and impingement angles of fuel and oxidizer are maintained at near-optimum condition for combustion efficiency.

The injector consists of a faceplate and fuel manifold assembly with a coaxial oxidizer feed tube and an adjustable (metering) orifice sleeve. Oxidizer flows through the center tube and out between a fixed pintle and the bottom of the sleeve; the fuel orifice is an annular opening between the sleeve contour and the injector faceplate. The fuel flows behind the face of the injector to cool the faceplate. Some fuel, tapped off the fuel manifold is used for barrier cooling of the wall. The fuel is emitted in the form of a thin cyclindrical sheet; the oxidizer, in a series of individual sprays. The oxidizer sprays break up the fuel stream and establish the injector pattern at all thrust settings.

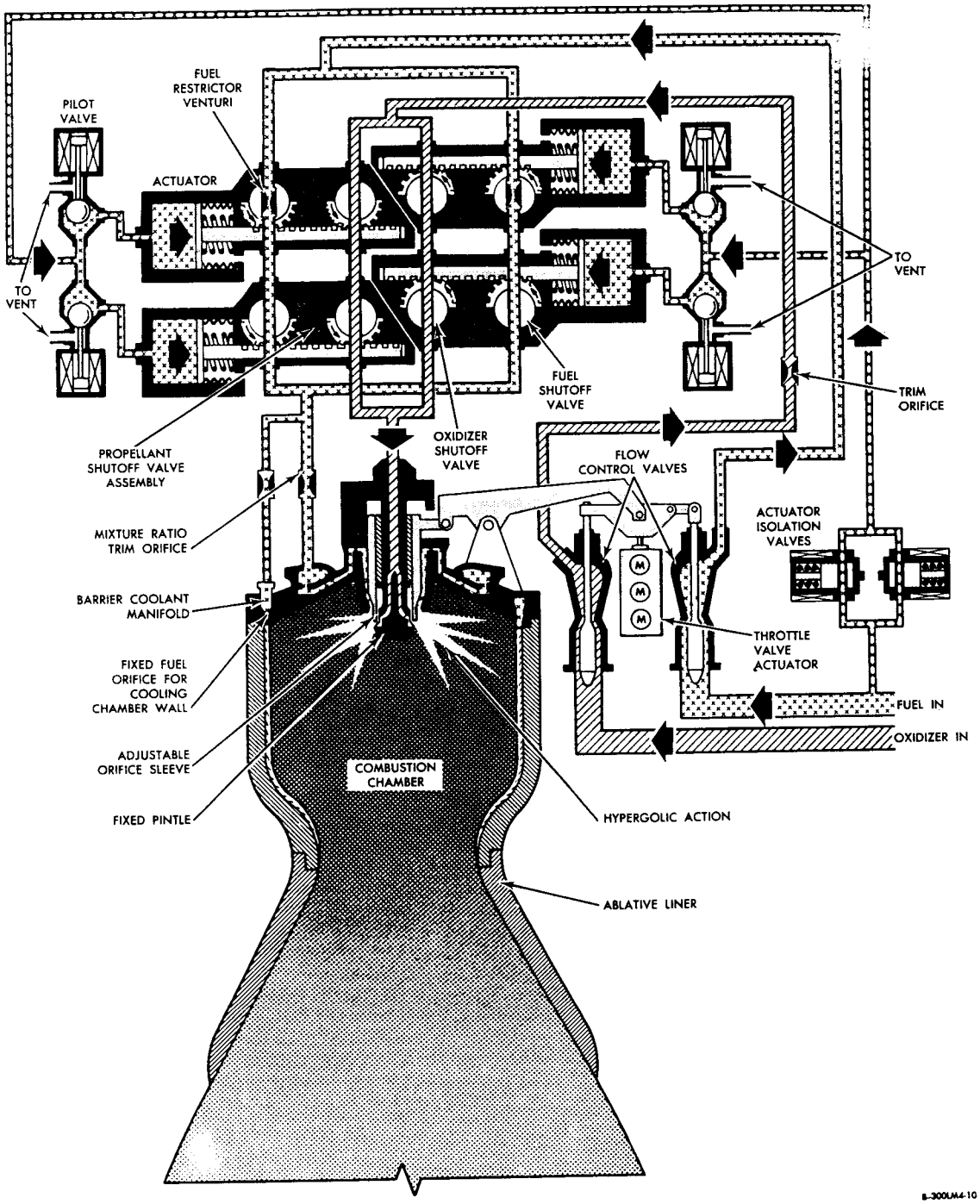

Figure 2.3-5. Descent Engine Assembly - Flow Diagram

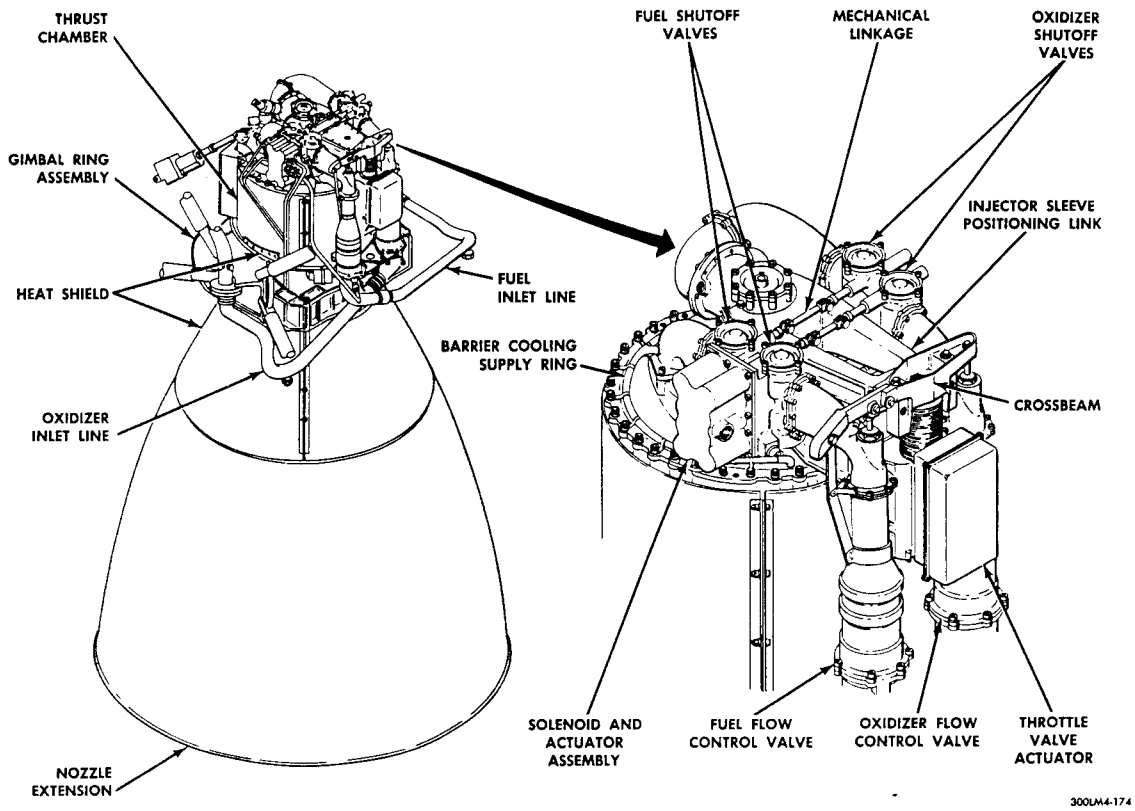

Figure 2.3-6. Descent Engine and Head End Assembly

The mechanical linkage that connects the pintle of the flow control valves and the injector sleeve is pivoted about a fulcrum attached to the injector body. Throttling is controlled by the throttle valve actuator, which positions the linkage in response to electrical input signals. At maximum thrust, the actuator positions the linkage to fully open the flow control valves and injector apertures. As commanded thrust is reduced, the actuator reduces the flow at the flow control valves and moves the injector orifice sleeve to reduce the apertures. As the adjustable orifice sleeve moves upward, the area of the propellant orifices increases.

2.3.3.3.1 Descent Engine Control.

After the engine is manually armed by setting the ENG ARM switch to DES, it can be fired automatically or manually. Under manual control, the engine can be started and stopped by the Commander by pressing the START and STOP pushbuttons on panel 5; it can be stopped by the LM Pilot by pressing the STOP pushbutton on panel 6. The mode of thrust control is determined by the THR CONT switch (panel 1). When this switch is set to AUTO, engine thrust is controlled by the LGC. When the switch is set to MAN, the Commander's or LM Pilot's TTCA (depending on the setting of the MAN THROT switch, panel 1) controls the engine thrust. In the automatic mode, the TTCA is still operational. It is normally set against its hard (low) stop, where it supplies a 10% thrust command that is summed with the LGC command, resulting in a combined thrust command to the descent engine. For example, if the required thrust is 50%, the LGC commands 40%, which is augmented by the 10% obtained from the TTCA. If the TTCA is moved from the hard stop, it supplies a greater portion of the combined command and the LGC command decreases accordingly. Thus, for the required 50% thrust, the TTCA may now command

20%; the LGC, 30%. If the TTCA is moved to a setting such that it commands more than the required thrust, it overrides the automatic command (the LGC portion becomes zero) and descent engine thrust is determined entirely by the TTCA setting.

The dual-scale CMD THRUST and ENG THRUST indicator (panel 1) displays commanded manual or automatic thrust on the CMD scale and actual engine thrust on the ENG scale. The ENG scale input is derived from a pressure transducer in the combustion chamber, because thrust is proportional to chamber pressure. At full throttle position the ENG scale reads 92.5% (actual full-throttle-position thrust) while the CMD scale reads between 92.5% and 100%. At all other throttle settings (10% to 65% throttling range) the ENG and CMD scales normally display identical readings of the actual engine thrust. Display of dissimilar readings indicates that the engine is not following the thrust commands or that transfer from automatic to manual throttle control is in process. As shown in the example given previously, if the TTCA is displaced from the hard stop in the automatic mode, for 50% required thrust, the TTCA may command 20% while the LGC contributes 30%. The ENG scale of the THRUST indicator will read 50%; however, the CMD scale (where LGC command is summed with a 10% bias) will read 40%. As the TTCA is moved to increasing throttle settings, the CMD scale readings decrease. When the CMD scale reading has dropped to 10%, the LGC no longer supplies any portion of the thrust command and the TTCA is in control. At this point, a smooth transfer from the automatic mode to the manual mode is accomplished by setting the THR CONT switch to MAN. The CMD and ENG scales will now indicate identical readings. (For the preceding example, both pointers will align at 50%.) Very slight deviations between CMD and ENG scale readings may occur as engine operating time increases. The deviations are due to combustion chamber erosion, which causes chamber pressure to decay slightly.

The T/W (thrust/weight) indicator (panel 1) is used primarily to monitor X-axis acceleration during lunar landing and lift-off. The T/W indicator is a self-contained accelerometer that displays instantaneous X-axis acceleration in lunar-g units (1 lunar g = 5.23 ft/sec^2). Inasmuch as a given throttle setting provides a specific acceleration when the vehicle has a given mass, the T/W indicator can be used as backup for the THRUST indicators to monitor engine performance.

2.3.4 DESCENT PROPULSION SECTION MAJOR COMPONENT/FUNCTIONAL DESCRIPTION.

2.3.4.1 Explosive Valves. (See figure 2.3-7.)

An ambient helium isolation valve, a supercritical helium isolation valve, a fuel compatibility valve, an oxidizer compatibility valve, a fuel vent valve, and an oxidizer vent valve are the explosive valves used in the DPS. These valves normally are closed; they are controlled by the EDS control and fire circuits and, when fired, fully open and remain open. To prevent valve failure in the closed position, each explosive valve has two cartridges that are fired from redundant systems in the EDS. A cartridge is fired by applying power to the initiator bridgewire for a few milliseconds. The resultant heat fires the initiator, generating gases in the valve explosion chamber at an extremely high rate. The gases drive the valve piston into the valve housing to open the valve by shearing a closure disk and aligning the piston port permanently with the pressure line plumbing.

2.3.4.2 Cryogenic Helium Storage Vessel.

The cryogenic helium storage vessel is double walled; it consists of an inner spherical tank and an outer jacket. The void between the tank and the jacket is filled with aluminized mylar insulation and evacuated to minimize ambient heat transfer into the tank. The vessel has fill and vent ports, a burst disk assembly, and an internal helium/helium heat exchanger. The inner tank is initially vented and loaded with liquid helium at approximately 8° R; the fill sequence is completed by closing the vent and introducing a high-pressure head of gaseous helium. As the high-pressure, low-temperature gas (at approximately 14° R) is introduced, the density and pressure of the stored helium are increased. At the end of pressurization, the density of the stored supercritical helium is approximately 8.7 pounds per cubic foot, and the final pressure is approximately 80 psi.

The burst disk assembly (figure 2.3-7A) prevents hazardous overpressurization within the vessel. It consists of two burst disks in series, with a normally open, low-pressure vent valve between the disks. The burst disks are identical; they burst at a pressure between 1,881 and 1,967 psid to vent the entire supercritical helium supply overboard. A thrust neutralizer at the outlet of the downstream burst disk

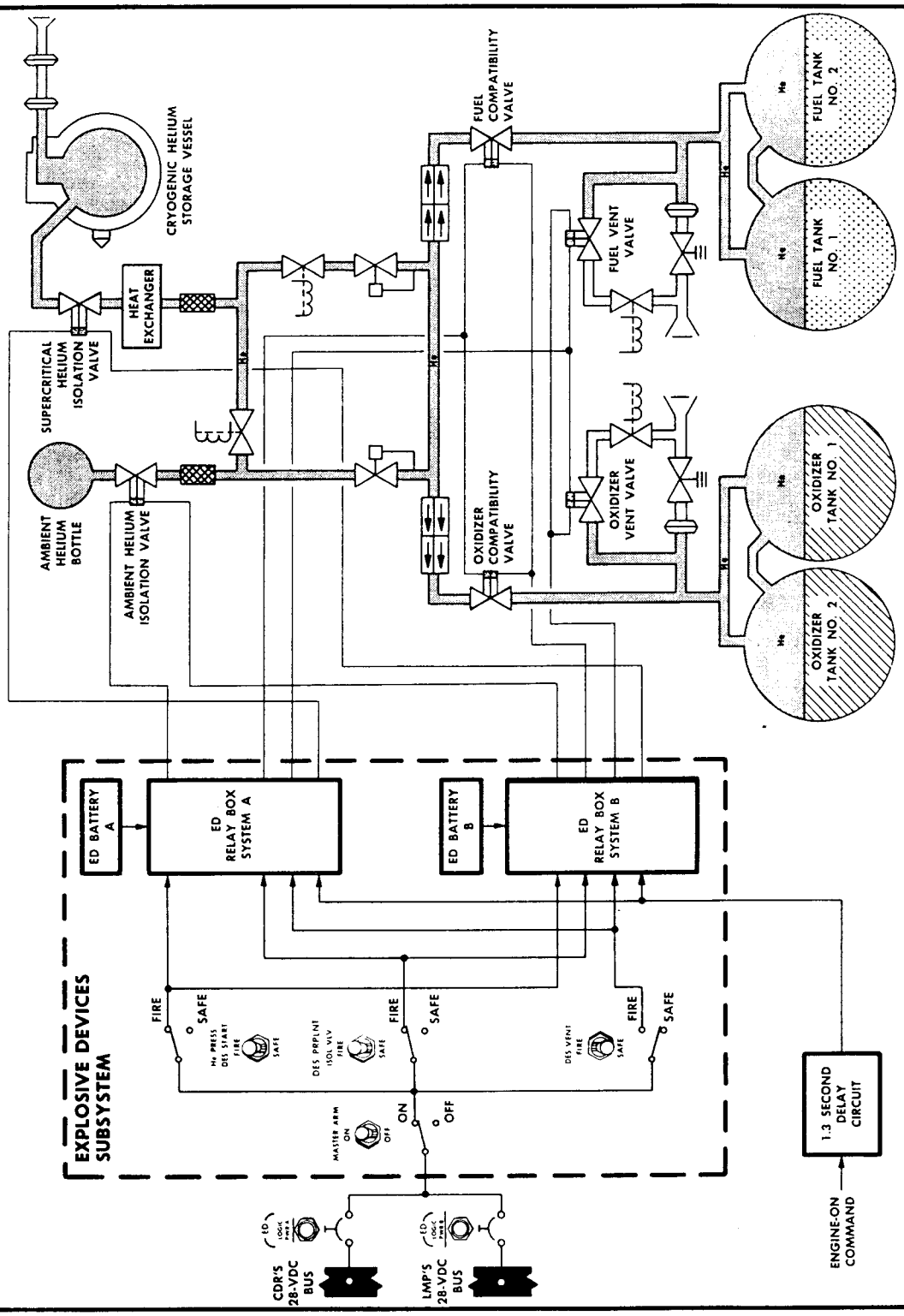

Figure 2.3-7. Descent Propulsion Section - Explosive Valves, Simplified Functional Diagram

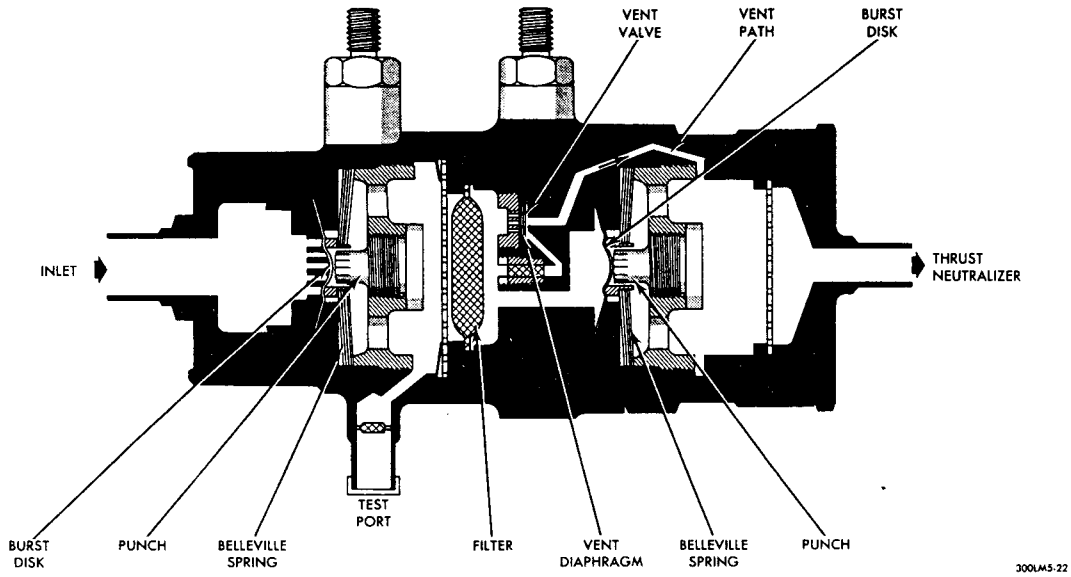

Figure 2.3-7A. Cryogenic Helium Storage Vessel - Burst Disk Assembly

diverts the escaping gas into opposite directions to prevent unidirectional thrust generation. The vent valve prevents low-pressure buildup between the burst disks if the upstream burst disk leaks slightly. The valve is open at pressures below 150 psia. It closes when the pressure exceeds 150 psia, so that, for faster leaks, the pressure buildup will eventually rupture the downstream burst disk and all supercritical helium will be vented.

2.3.4.3 Fuel/Helium Heat Exchanger.

Fuel is routed directly from the fuel tanks to the two-pass fuel/helium heat exchanger. The heat exchanger transfers heat from the fuel to the supercritical helium, which is warmed to operating temperature by flowing through the two separate heat exchanger passes. The fuel/helium heat exchanger is of finned tube construction; the first and second helium passages are in parallel crossflow with respect to the fuel. All parts are stainless steel; each fin is lap brazed to an adjacent fin and to the side panels to increase structural rigidity. Helium flows in the tubes and fuel flows in the outer shell across the bundle of staggered, straight tubes.

2.3.4.4 Helium Isolation Solenoid Valves. (See figure 2.3-8.)

These helium isolation valves are two-coil, latching, solenoid-operated valves that shut off helium flow through one leg of redundant flow lines if the pressure regulator in the leg fails open. The valves are actuated by the DESCENT He REG 1 and REG 2 switches (panel 1). A position indicator switch in each valve feeds a signal to the DESCENT He REG 1 and REG 2 talkbacks to indicate whether the particular valve is closed (barber-pole display) or open (gray display).

The valve poppet is part of the "open" armature and shaft assembly. When the "latch open" coil is energized, the poppet leaves the valve seat as the "open" armature slides into the latched position, overcoming the force of the closing spring. The latch balls become seated in the "open" armature detents to maintain the valve open after the "latch open" coil is deenergized. To close the valve, the latch release coil is energized, causing the latch armature and pin assembly to slide back, overcoming the force of the latch spring. As the pin moves back, the latch balls drop out of the detents in the "open" armature and the force of the closing spring pushes and maintains the poppet firmly against the valve seat. The normally closed, internal bleed valve opens if seepage past the moving valve seals causes a pressure buildup in the valve housing. An arc suppression circuit, consisting of two zener diodes across each coil, eliminates the induced voltage generated when the coil is deenergized.

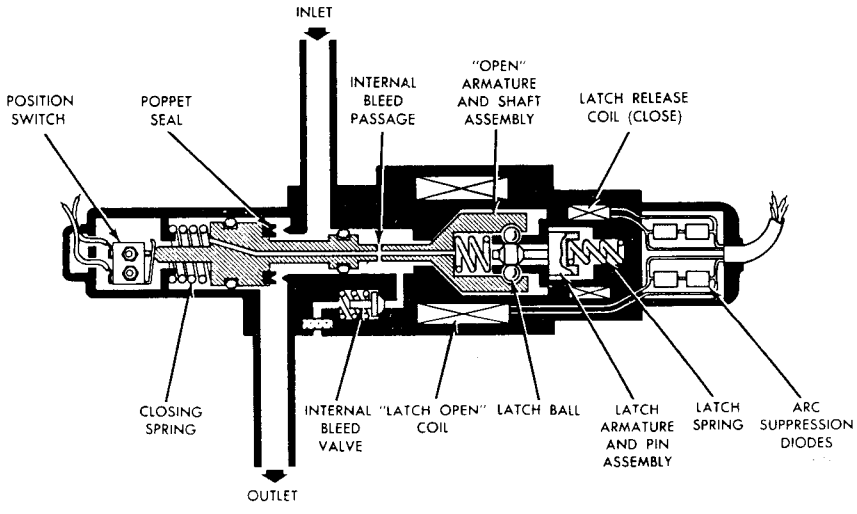

Figure 2.3-8. Helium Isolation Solenoid Valve, Latched-Open Position

2.3.4.5 Helium Pressure Regulators. (See figure 2.3-9.)

The primary and secondary helium pressure regulators are two separate units contained in a common housing. Each regulator is supplied from a separate helium pressurization line, but both feed into a single outlet manifold. Each pressure regulator consists of a direct-sensing main stage and a pilot stage. The valve in the main stage is controlled by the valve in the pilot stage, which senses small changes in the regulator outlet pressure (Pr) and converts these changes to proportionally large changes in control pressure (Pc). The main stage valve poppet is positioned for varying flow demands by changes in the control pressure acting on the main stage bellows sensor.

A reduction in flow demand causes a rise in the regulator outlet pressure because flow from the regulator exceeds the new downstream demand. The rise in outlet pressure reduces the pilot valve output, thereby reducing flow into the main stage chamber. Because the pilot stage chamber bleeds directly into the regulator outlet line, reduced flow into the chamber causes a proportional reduction in the control pressure, which, in turn, moves the main stage valve poppet toward the closed position. The resultant reduced flow through the main stage valve matches the downstream demand. An increase in the downstream demand causes a reduction in outlet pressure, which tends to open the pilot valve. The resultant increase in control pressure causes the main stage valve poppet to open more to meet the increased downstream demand.

The flow limiter at each regulator inlet restricts maximum flow through the regulator to 19 pounds of helium per minute so that the propellant tanks are protected if the regulator fails open. The filter downstream of the flow limiter prevents particles, which could cause excessive leakage at lockup or regulation malfunction, from reaching the main stage and the pilot valve seats. The control pressure relief valve prevents control pressure from exceeding the regulator outlet pressure by more than 150 to 200 psi, by venting main stage chamber pressure into the outlet line. This relief valve operates only if the pilot

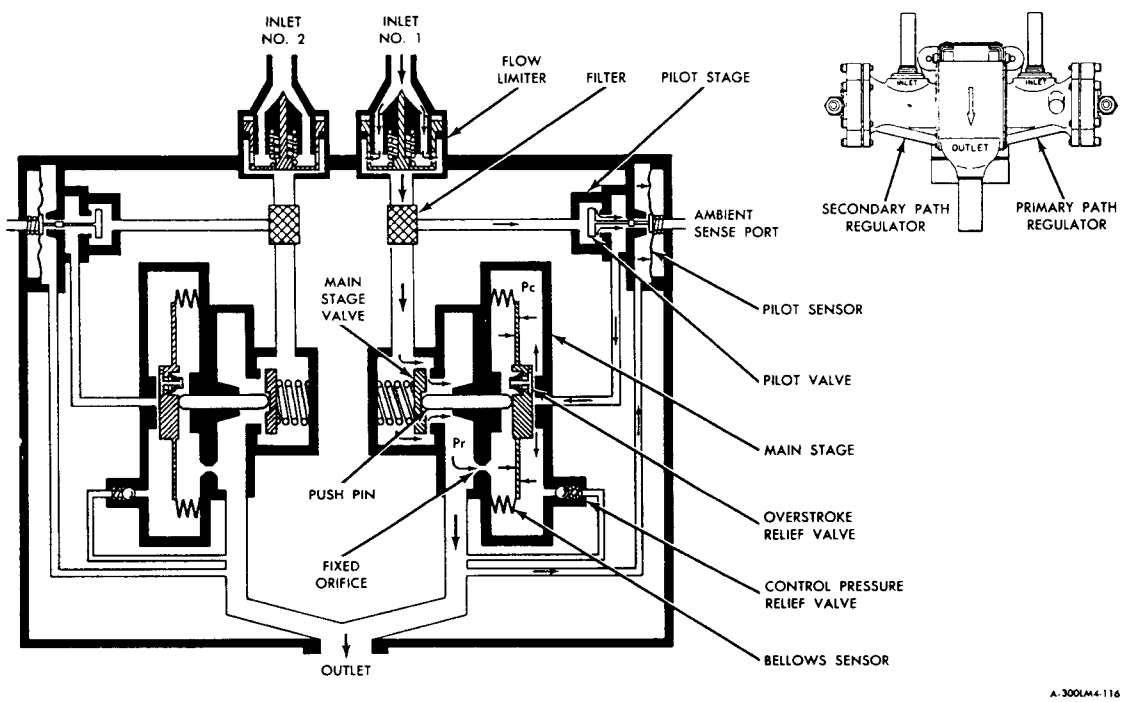

Figure 2.3-9. Descent Propulsion Section - Helium Pressure Regulators

valve fails; it does not interfere with normal pressure regulator operation. The overstroke relief valve at the main stage bellows sensor prevents the regulated outlet pressure from overshooting its limit.

2.3.4.6 Relief Valve Assemblies. (See figure 2.3-10.)

The relief valve assemblies are downstream of the burst disk assemblies in the helium pressurization line. The helium enters the relief valve chamber and acts against the relief valve diaphragm, overcoming the force of the relief valve spring and lifting the poppet off its seat. This opens the helium pressurization line to vent excess helium overboard. A thrust neutralizer at the outlet port prevents generation of unidirectional thrust. The cylindrical filter in the relief valve chamber prevents particles from lodging in the valve seat. When helium pressure drops below the reseat pressure, the relief valve closes to prevent further helium loss. Before burst disk rupture, the light vent spring keeps the relief valve poppet slightly off its seat. This prevents pressure buildup in the relief valve chamber in case of a slight burst disk leak. If the pressure in the relief valve chamber exceeds approximately 8 psi, the force of the vent spring is overcome and the relief valve poppet closes. Pressure then continues to build up and work against the relief valve diaphragm. When the pressure reaches approximately 260 psi, the relief valve cracks.

2.3.4.7 Burst Disk Assemblies. (See figure 2.3-11.)

Each helium pressurization line leading to the propellant tanks has a burst disk assembly upstream of the relief valve assembly. The function of the burst disk assembly is to protect the relief valve from corrosion by the propellant. Between 260 and 275 psia system pressure the burst disk will rupture, permitting the relief valve to function. When the inlet pressure reaches the burst pressure range, the coil-spring-loaded disk assembly and the belleville spring inner support assembly, which are connected by the burst disk, move downstream together. The disk assembly seats first and because the burst disk cannot withstand the force on the inner support assembly, it ruptures. The disk assembly is moved upstream by the coil spring, opening the flow passage.

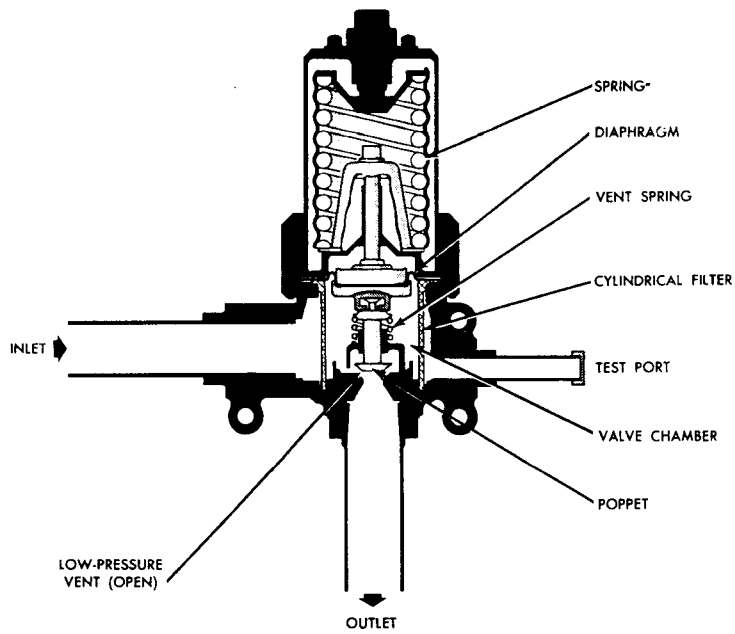

Figure 2.3-10. Descent Propulsion Section - Relief Valve Assembly

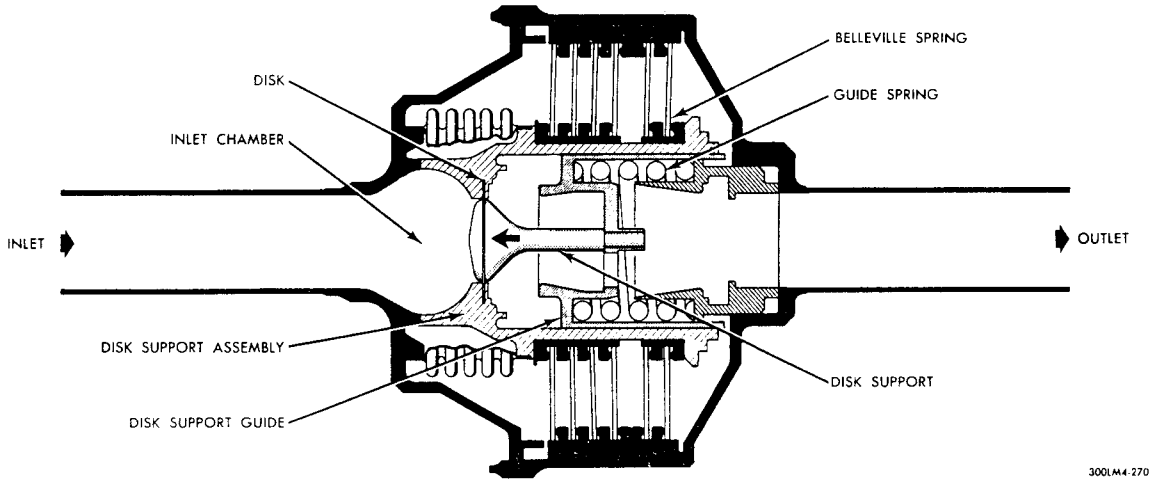

Figure 2.3-11. Descent Propulsion Section - Burst Disk Assembly

2.3.4.8 Propellant Storage Tanks.

The propellant supply is contained in four cylindrical, spherical-ended titanium tanks of identical size and construction. Two tanks contain fuel; the other two, oxidizer. Each pair of tanks containing like propellants is interconnected at the top, and all propellant lines downstream of the tanks contain trim orifices, to ensure balanced propellant flow. A diffuser at the helium inlet port (top) of each tank distributes the pressurizing helium uniformly into the tank. An antivortex device in the form of a series of vanes, at each tank outlet, prevents the propellant from swirling into the outlet port, thus precluding inadvertent helium ingestion into the engine. Each tank outlet also has a propellant retention device (negative-g can) that permits unrestricted propellant flow from the tank under normal pressurization, but blocks reverse propellant flow (from the outlet line back into the tank) under zero-g or negative-g conditions. This arrangement ensures that helium does not enter the propellant outlet line as a result of a negative-g or zero-g condition or propellant vortexing; it eliminates the possibility of engine malfunction due to helium ingestion.

2.3.4.9 Throttle Valve Actuator. (See figure 2.3-12.)

The throttle valve actuator is a passively redundant, electromechanical, linear-motion servoactuator which moves the throttle linkage in response to an electrical input command. Moving the throttle linkage simultaneously changes the position of the flow control valve pintles and the injector sleeve. Changing the position of the flow control valve pintles varies the amount of fuel and oxidizer metered into the engine and thus changes the magnitude of engine thrust. The throttle valve actuator is located between the fuel and oxidizer flow control valves; its housing is rigidly attached to the engine head end and its output shaft is attached to the throttle linkage.

The actuator is controlled by three electronic channels, which power three d-c torque motors on a common shaft. The motor shaft supplies the input to the ball screw, which converts rotary motion to the linear motion of the throttle valve actuator output shaft (total excursion is 0.754 ± 0.01 inch). Nonjamming mechanical stops prevent overtravel of the output shaft in the retracted and extended positions. All mechanical moving parts of the actuator are within a hermetically sealed portion of the unit (pressurized to 0.25 psia with a 9 to 1 mixture of nitrogen and helium). A diaphragm-type leak indicator in the cover of the hermetically sealed portion of the actuator provides visual evidence of loss of vacuum within the unit. Five potentiometers are ganged to the torque motor shaft through a single-stage planetary reduction gear (potentiometer drive gears). Three of these potentiometers supply position feedback information to the three motor amplifier channels, one to each channel. One of the other two potentiometers provides throttle actuator shaft position data for telemetry to MSFN, the other one is a spare.

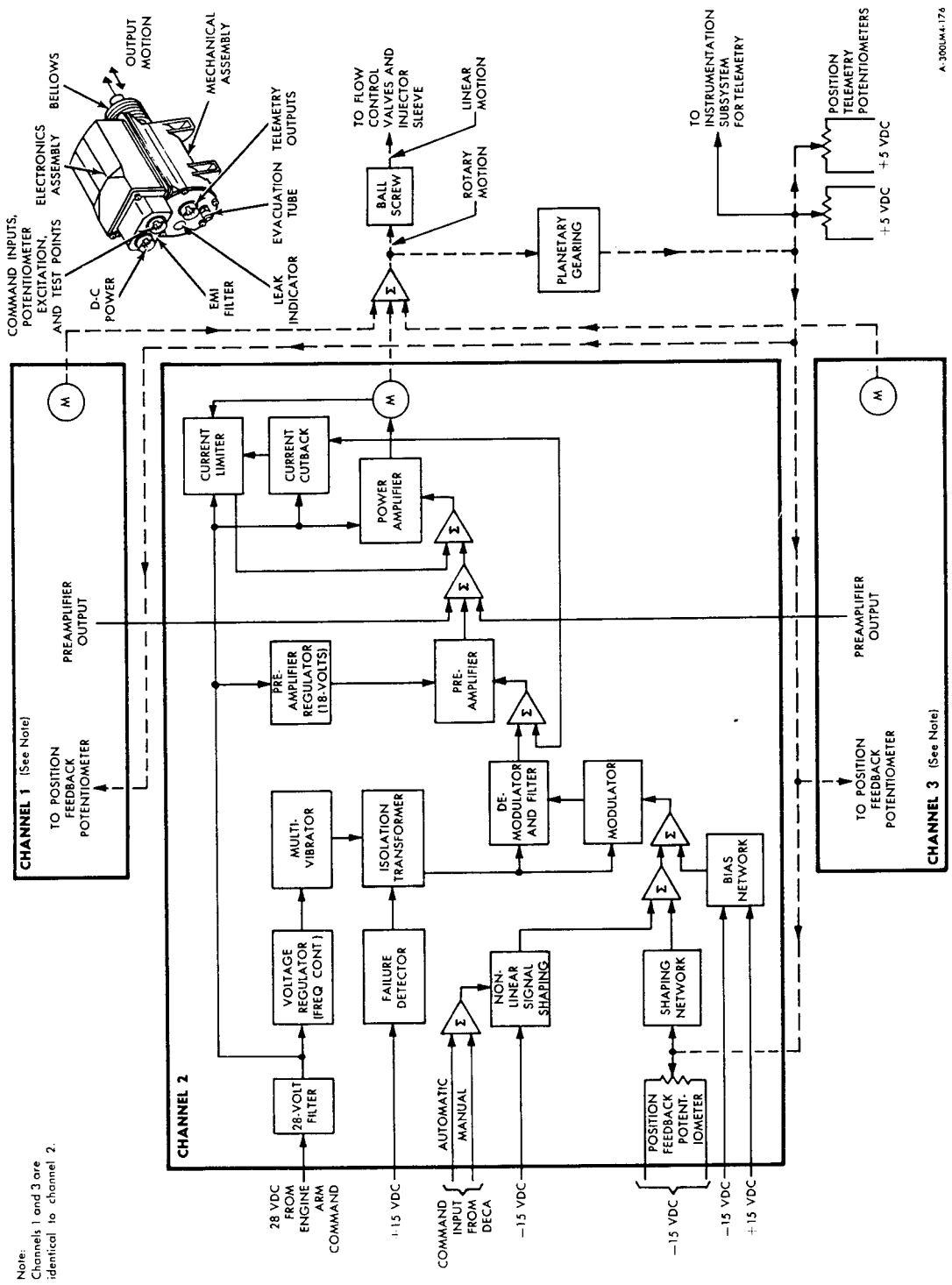

Figure 2.3-12. Throttle Valve Actuator - Block Diagram

The automatic and manual command signal input voltages are summed and fed into the nonlinear shaping network to provide the nonlinear position versus command required to nullify other nonlinearities in the engine and provide an overall signal that represents linear thrust versus command voltage. This signal is summed with the voltage output of the position feedback potentiometer. If the two voltages are of equal magnitude, but positive polarity, the error voltage is zero. If they are not equal, a positive or negative error voltage is generated. (The error voltage is positive if the command signal is greater; negative, if the feedback voltage is greater.) The error voltage is summed with a preset input from the bias network (used to trim the actuator) and is then conditioned and fed into a preamplifier. The preamplifier output is summed with the preamplifier outputs of the other channels to control the power amplifier that drives the torque motor (clockwise or counterclockwise). As the motor rotates the ball screw, the position feedback potentiometer is driven by the planetary gearing. A current-limiting circuit senses motor current and, through feedback, limits the current to 3 amperes per channel under normal conditions. A current-cutback circuit senses motor voltage and, under conditions indicative of power transistor failure, provides an input to the current-limiting circuit, causing it to limit the current to approximately 0.75 ampere per channel.

The redundancy within the throttle valve actuator ensures that failure of any one electrical component will not cause the actuator to fail. Failure of one preamplifier channel will be nullified by the cross coupling and high-gain feedback and will result in a negligible positioning error. Failure of a power amplifier or torque motor circuit is detected by the current-cutback and/or current-limiting circuits, and any erroneous output is reduced to a level that can be overcome by the other two channels without detrimental effects.

The throttle valve actuator provides a fail-safe system in the event selective malfunctions external to the throttle valve actuator occur. If either the primary 28-volt d-c power, the command and reference voltages, or the +15- or -15 volt reference voltage is lost, the throttle valve actuator causes the descent engine to automatically thrust at full throttle position. If 28-volt d-c power is lost while the descent engine is firing, the throttle valve actuator cannot sustain control, it will be driven to the full throttle position by the hydraulic loads imposed by the propellant pressures on the flow control valves and the injector. (If there are no hydraulic loads, the throttle valve actuator moves to the position of balanced mechanical loads.) Loss of the -15-volt reference voltage causes the potentiometer feedback voltage to drop to zero. As a result, only the positive command voltage is in control, and the throttle valve actuator moves to the full throttle position. If the +15-volt reference voltage fails, the failure-detection circuit that monitors this voltage provides a signal that causes the throttle valve actuator to move to the full throttle position. The power source for the command voltage is the +15 volt power supply that supplies the input to the plus side of the throttle valve actuator reference. Therefore, loss of the command voltage also results in loss of the reference voltage, which causes the throttle valve actuator to move to the full throttle position. (Loss of the command voltage alone would cause the throttle valve actuator to move to the minimum thrust position.)

2.3.4.10 Flow Control Valves. (See figure 2.3-13.)

The oxidizer and fuel flow control valves are on the side of the engine, immediately downstream of the propellant inlet lines. They are secured to the throttle valve actuator mounting bracket. The flow control valve pintle assemblies are mechanically linked to the throttle valve actuator by a crossbeam.

The flow control valves are cavitating venturis with movable pintle sleeves. Engine throttling is initiated by an electrical signal to the throttle valve actuator, commanding an increase or decrease in engine thrust. Operation of the throttle valve actuator drives the crossbeam to a new position, thus changing the position of the pintles in the flow control valves. This axial movement of the pintles decreases or increases the pintle flow areas to control propellant flow rate and thrust. Below an approximate 70% thrust setting, flow through the valves cavitates, and hydraulically uncouples the propellant transfer system (and thereby, the flow rate) from variations in combustion chamber pressure. The movable pintle sleeve, shaft-driven through the valve body, is sealed by two flexible bellows. Shear pins in the bearing sleeves permit the valve bearings to operate in redundant modes (rolling or sliding) to improve reliability. Normally, the bearings roll; however, under an excessive load, the shear pins give to permit the bearings to slide. Both pintle sleeve shafts are attached to a yoke that is driven by the throttle valve actuator.

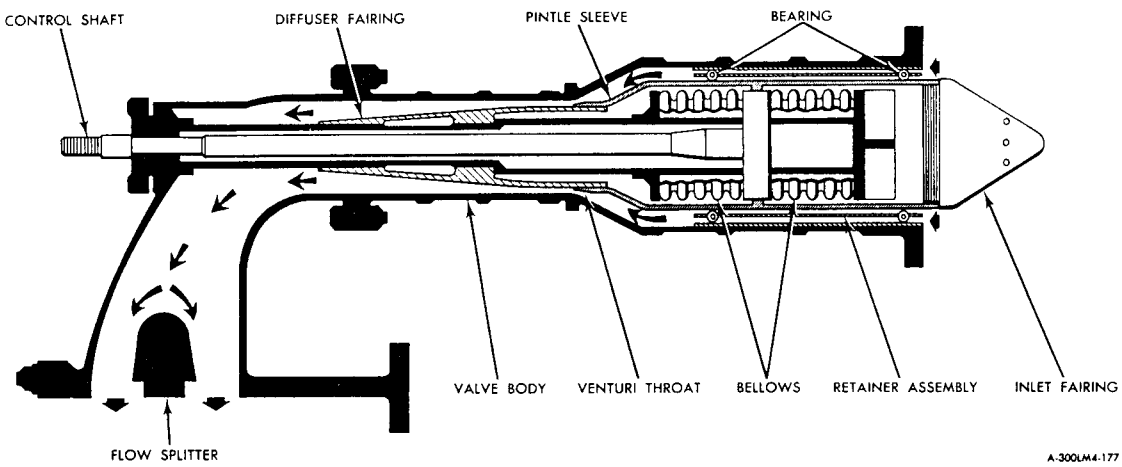

Figure 2.3-13. Flow Control Valve

2.3.4.11 Propellant Shutoff Valve Assemblies.

Each of the four propellant shutoff valve assemblies consists of a fuel shutoff valve, an oxidizer shutoff valve, a pilot valve, and a shutoff valve actuator. The shutoff valve actuator and the fuel shutoff valve are in a common housing. The oxidizer shutoff valve is in a separate housing to isolate fuel from oxidizer. It is actuated by a mechanical linkage driven from the fuel shutoff valve. The fuel and oxidizer shutoff valves, downstream of the flow control valves, are exposed to the full propellant pressure before engine firing. Propellant leakage at the valve seats is vented overboard.

2.3.4.11.1 Pilot Valves and Shutoff Valve Actuators.

The four solenoid-operated pilot valves control the actuation fluid (fuel) for the fuel and oxidizer shutoff valves. Normally, the pilot valves are closed, the solenoids are deenergized, and the actuation fluid is shut off by action of the spring-loaded solenoid plungers on the ball poppet seated in the lower pilot valve seats. The back side of the actuator chamber is vented to preclude a fuel buildup caused by leakage of the pilot valves, and overpressurization caused by an excessive fuel temperature increase. When the pilot valves are open, all solenoids are energized, and the actuation fluid (at approximately 110 psia) acts against the spring-loaded actuator plunger to open the oxidizer and fuel shutoff valves. At this point, the pilot valve poppets are forced against the upper valve seats, sealing off the vent port. When the electrical signal is removed, the valve poppets return to their lower seat to seal off the actuation fluid. The propellant shutoff valves are closed by the return action of the actuator piston springs, which expels the fuel entrapped in the cylinders and valve passages through the pilot vent port.

2.3.4.11.2 Fuel and Oxidizer Shutoff Valves.

The fuel and oxidizer shutoff valves are mechanically linked, fuel-actuated ball valves that are arranged in a series-parallel configuration. The valve housings are made of aluminum alloy. The ball element operates against a spring-loaded Teflon seat to assure positive sealing when the valve is closed. All ball valves are supported by ball bearings. The individual valves are rotated by a rack-and-pinion-gear arrangement, which translates the linear displacement of the pistons in the shutoff valve actuators.

2.3.4.12 Variable-Area Injector. (See figure 2.3-14.)

The variable-area injector consists of a pintle assembly, drive assembly, and manifold assembly. The pintle assembly introduces the propellant uniformly into the combustion chamber. The drive assembly has a twofold function: first, it serves as a passage for conducting the oxidizer into the pintle assembly; second, it contains the bearing and sealing components that permit accurate positioning of the injector sleeve. The injector sleeve varies the injection area so that near-optimum injector pressure drops and propellant velocities are maintained at each thrust level. The primary function of the manifold

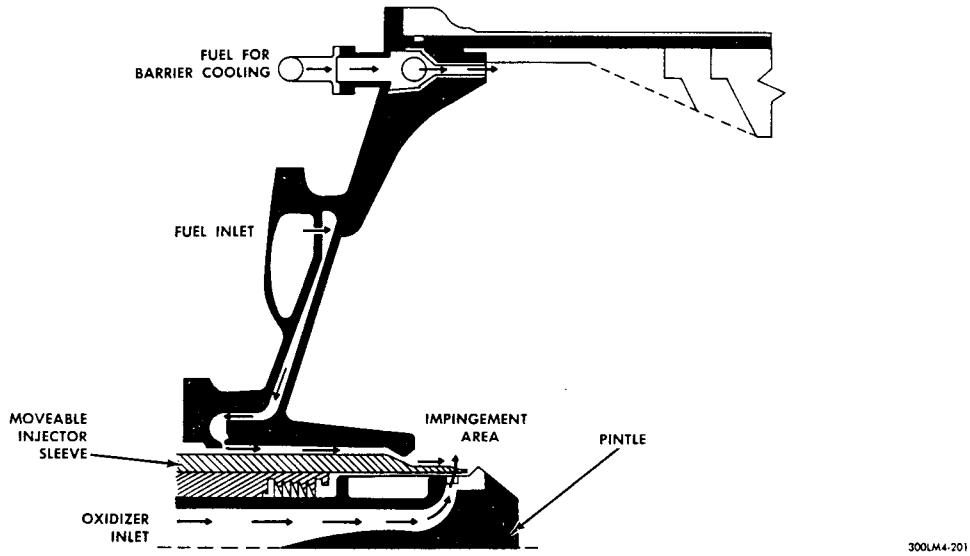

Figure 2.3-14. Variable-Area Injector - Quarter Section

assembly is to distribute the fuel uniformly around the outer surface of the sleeve. Fuel enters the manifold assembly and is passed through a series of distribution plates near the outer diameter of the assembly.

At the center of the manifold, the fuel passes through a series of streamlined hole rings that suppress fuel flow discontinuities. From this point, the fuel is admitted into a narrow passage formed by two parallel conical surfaces (the manifold body and a faceplate). The passage smoothes out remaining gross fuel discontinuities and assists in cooling the injector face. The fuel then passes onto the outer surface of the sleeve, past a fuel-metering lip. The fuel is injected as a hollow cylinder so that it reaches the impingement zone with a uniform circumferential velocity profile and without atomizing, at all flow rates. The oxidizer is injected through a double-slotted sleeve so that it forms a large number of radial filaments. Each filament partially penetrates the fuel cylinder and is enfolded by fuel in such a way that, following fast liquid-phase reactions and gas evolution, little preferential separation of oxidizer and fuel can occur. For given propellant densities, overall mixture ratio, and injector geometry, there is a range of propellant injection velocity ratios that result in maximum mixture ratio uniformity throughout the resultant expanding propellant spray. When they occur, the liquid-phase reactions generate gas and vapor that atomize and distribute the remaining liquid oxidizer and fuel uniformly in all directions, resulting in high combustion efficiency. A separate fuel manifold feeds the barrier cooling orifices to minimize engine erosion.

2.3.4.13 Combustion Chamber and Nozzle Extension. (See figure 2.3-15.)

The combustion chamber consists of an ablative-cooled chamber section, nozzle throat, and nozzle divergent section. The ablative sections are enclosed in a continuous titanium shell and jacketed in a thermal blanket composed of aluminized nickel foil and glass wool. A seal prevents leakage between the combustion chamber and nozzle extension.

The nozzle extension is a radiation-cooled, crushable skirt, made of columbium with an aluminide coating. It is attached to the combustion chamber case at a nozzle area ratio of 16 to 1 and extends to an exit area ratio of 54.0 to 1.

2.3.4.14 Gimbal Ring and Gimbal Drive Actuators.

The gimbal ring is located at the plane of the combustion chamber throat. It consists of a rectangular beam frame and four trunnion subassemblies. The assembly permits up to +6° or -6° roll and pitch trim control of the engine. A description of the two gimbal drive actuators is given in paragraph 2.2.4.6.

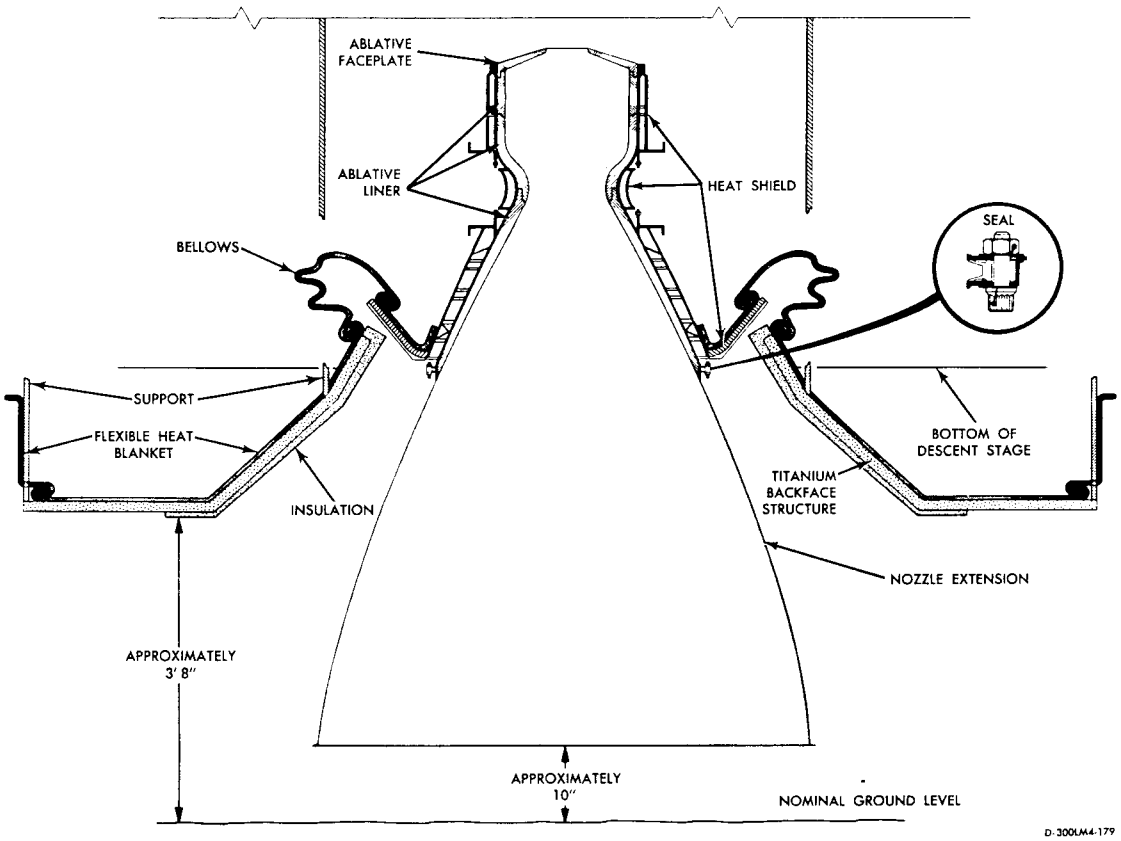

Figure 2.3-15. Descent Engine Combustion Chamber, Nozzle Extension, and Heat Shield

2.3.5 DESCENT PROPULSION SECTION PERFORMANCE AND DESIGN DATA.

The performance and design data for the DPS are given in table 2.3-1.

Table 2.3-1. Descent Propulsion Section - Performance and Design Data

Pressurization section	
Ambient helium bottle	
Volume	1 cubic foot
Initial filling weight of helium	1.12 pounds
Initial helium pressure and temperature	1,600 psia at +70° F
Usable helium	1 pound
Proof pressure	2,333 psi
Burst pressure	2,625 psi

Table 2.3-1. Descent Propulsion Section - Performance and Design Data (cont)

Pressurization section (cont)	
Cryogenic helium storage vessel	
Nominal storage pressure and temperature	1,555 psia at -400° F
Maximum storage pressure and temperature	1,710 psia at -320° F
Volume	5.9 cubic feet
Density	8.7 pounds per cubic foot
Initial filling pressure and temperature	80 psia at -450° F
Initial filling weight at charge pressure	51.2 pounds
Usable helium	49.4 pounds
Proof pressure	2,274 psia
Burst pressure	3,420 psia
Burst-disk rupture pressure	1,881 to 1,967 psid
Helium filters	
Nominal filtration	5 microns
Absolute filtration	15 microns
Helium pressure regulators	
Outlet pressure	245+3-3 psia at inlet pressure of 400 to 1750 psia 245+3-5 psia at inlet pressure of 320 to 400 psia
Normal operation flow rate range (nominal)	0.52 to 5.5 pounds per minute
Nominal flow rate at full throttle	5.2 pounds per minute
Inlet pressure range	320 to 1,750 psia
Lockup pressure (maximum)	253 psia at inlet pressure of 400 to 1750 psia 255 psia at inlet pressure of 320 to 400 psia
Maximum flow rate	19 pounds per minute
Quadruple check valve assemblies	
Opening pressure	2 to 2.88 psid
Maximum pressure drop	8.0 psi at full throttle
Relief valve assembly	
Burst-disk rupture pressure	260 to 275 psi
Relief valve cracking pressure	260 psi
Full-flow pressure	275 psi
Fully open flow rate	10 pounds per minute
Reseat pressure (minimum)	254 psi

Table 2.3-1. Descent Propulsion Section - Performance and Design Data (cont)

Propellant feed section	
Propellant tanks	
Capacity (each tank)	67.0 cubic feet
Total fuel (unpressurized)	7,577 pounds
Total oxidizer	12,085 pounds
Ullage volume (minimum)	1,728 cubic inches
Usable fuel	7,492 pounds
Usable oxidizer	11,957 pounds
Usable fuel and oxidizer	19,499 pounds
Unusable fuel	47 pounds
Unusable oxidizer	90 pounds
Unusable fuel and oxidizer	137 pounds
Nominal tank ullage pressure (at full throttle position)	235 psia
Proof pressure	360 psia
Burst pressure	405 psia
Nominal propellant temperature	$+70^{\circ}$ F
Propellant temperature range	$+50^{\circ}$ to $+90^{\circ}$ F
Engine interface inlet pressure (trim orifice output at full throttle position)	222±2 psia
Propellant filters	
Nominal filtration	40 microns
Absolute filtration	60 microns
Fuel filter rated flow	13.3 pounds per second
Fuel filter maximum pressure drop	2 psi
Oxidizer filter rated flow	21.2 pounds per second
Oxidizer filter maximum pressure drop	3 psi
Engine Assembly	
Nominal engine thrust (full throttle)	9,900 pounds (FTP)
Minimum engine thrust	1,280 pounds (12.2%)
Nominal combustion chamber pressure (FTP)	103.4 psia
Engine-gimbaling capability	$+6^{\circ}$ or -6° for trim control along Y-axis and Z-axis

Table 2.3-1. Descent Propulsion Section - Performance and Design Data (cont)

Engine Assembly (cont)	
Propellant injection ratio (oxidizer to fuel)	1.6 to 1
Approximate weight	348 pounds
Overall length	95 inches
Nozzle exit diameter	63 inches

2.3.6 DESCENT PROPULSION SECTION OPERATIONAL LIMITATIONS AND RESTRICTIONS.

The operational limitations and restrictions for the DPS are as follows:

- The landing gear must be deployed before descent engine firing. If not deployed, the landing gear would be in the path of the descent engine plume and would be damaged.
- Before descent engine starts, the RCS +X-axis thrusters must be fired to settle the propellants under weightless conditions. Unsettled or insufficiently settled propellants will result in rough or erratic starts that could lead to engine failure.
- Propellant bulk temperatures before descent engine start must be between +50° and +90° F. If temperature limits are exceeded, the resultant rough combustion may adversely affect engine-component performance, and ullage pressure limitations may be exceeded.
- The descent engine must be not operated for prolonged periods in the throttling range of 65% to 92.5%. In this range, operation of the cavitating venturis of the flow control valves becomes unpredictable and may cause an improper fuel-oxidizer mixture ratio, which will result in excessive engine erosion and early combustion chamber burn-through.
- The DPS must not remain pressurized longer than 3.5 days before the anticipated termination of use. If this limit is exceeded, the pressurization section components may fail to operate because of the corrosive nature of the propellants.
- The descent engine combustion chamber must not be subjected to more than 1,100 seconds of engine operation. Exceeding this limitation will cause the engine to operate with a severely charred combustion chamber, possibly resulting in burn-through.

2.3.7 ASCENT PROPULSION SECTION INTERFACES. (See figure 2.3-16.)

The APS receives 28-volt d-c and 115-volt a-c primary power through the Commander's and LM Pilot's buses of the EPS. The outputs of the APS pressure and temperature transducers, low-level sensors, and valve position indicator switches are processed in the IS and are transmitted via the CS to MSFN. The IS also processes the APS caution and warning signals. The EDS opens explosive valves in the APS to enable propellant tank pressurization. Interconnect plumbing between the APS propellant tanks and the RCS thrust chamber assembly feed lines permits the RCS to use APS propellants during certain mission phases, thereby conserving the RCS propellant supply.

The GN&CS issues automatic on and off commands to the ascent engine. Ascent engine arming, ignition, and shutdown can be initiated by automatic guidance equipment (PGNS or AGS) or by the astronauts. The automatic and manual commands are sent to the S&C control assemblies, which provide sequential control of LM staging and engine on and off commands. The ascent engine is armed manually by setting the ENG ARM switch to ASC or pressing the ABORT STAGE pushbutton. (Either action automatically shuts off the descent engine if it is firing.) After setting the ENG ARM switch to ASC (and after initial propellant tank pressurization), the ascent engine can be started manually by pressing the START pushbutton and stopped by pressing either STOP pushbutton. In the event of an abort-stage command while the descent engine is firing, the S&C control assemblies provide a time delay before commanding LM staging and ascent engine firing. This delay ensures that the descent engine has stopped thrusting before staging occurs. To stop the ascent engine after an abort-stage start, the ABORT STAGE pushbutton must be reset (pressed a second time) to release the switch. (This procedure is necessary because the ABORT STAGE pushbutton disables the STOP pushbutton.) The manual commands override the commands issued by the automatic guidance equipment.

The APS modes of operation are discussed in detail in paragraph 2.1.3.5. The control circuitry is shown in figure 2.1.19.

2.3.8 ASCENT PROPULSION SECTION FUNCTIONAL DESCRIPTION.

The APS consists of a constant-thrust rocket engine that is not gimbaled, two propellant tanks, two helium tanks, and associated propellant feed and helium pressurization components. (See figure 2.3-17.) The engine is installed in the midsection of the ascent stage; it is canted so that the center line is tilted 1.5° from the X-axis, in the +Z-direction. The engine develops 3,500 pounds of thrust in a vacuum, sufficient to launch the ascent stage from the lunar surface and place it into a predetermined lunar orbit. The engine can be shut down and restarted, within operational limitations and restrictions (paragraph 2.3.11), as required by the mission.

Functionally, the APS can be subdivided into a pressurization section, a propellant feed section, and an engine assembly.

2.3.8.1 Pressurization Section. (See figure 2.3-18.)

The propellants are pressurized by gaseous helium, supplied from two identical tanks and routed through redundant flow lines into the propellant tanks. The helium is stored at a nominal pressure of 3,050 psia at a nominal temperature of +70° F. A pressure transducer at each tank outlet port is connected to the HELIUM indicator via the HELIUM MON selector switch. Before staging, the pressure transducers also supply a signal to the IS that will cause the ASC PRESS warning light to go on when the pressure in either helium tank is less than 2,773 psia. This alerts the astronauts to identify and isolate the faulty tank. The HELIUM MON selector switch selects the tank pressure to be displayed. When a caution or warning light goes on, a signal is routed from the CWEA to light the MASTER ALARM pushbutton/lights (panels 1 and 2) and to provide a 3-kc tone in the astronaut headsets. Pressing either MASTER ALARM pushbutton turns off both lights and terminates the tone, but has no effect on the caution or warning light. If the ASC PRESS warning light goes on because pressure in either helium tank is less than 2,773 psia, the light goes off upon separation of the descent and ascent stage.

Before initial ascent engine operation, the helium isolation explosive valves prevent the helium from leaving the tanks. These valves can be opened individually or simultaneously. The propellants are not pressurized until shortly before initial ascent engine start. To accomplish initial pressurization, the helium isolation explosive valves and the fuel and oxidizer compatibility explosive valves

(upstream of the propellant tanks) are opened simultaneously Normally, propellant pressurization is initiated by setting the ASCENT He SEL switch (panel 8) to F If the HELIUM indicator shows a leak (zero or decaying pressure) in one of the tanks, the ASCENT EL switch is set so that only the explosive valve leading from the nonleaking tank opens, thus pr ting helium loss through the leaking tank via the helium interconnect line (downstream of the explosive valves). The MASTER ARM switch is then set to ON and the ASCENT He PRESS switch is set to FIRE and released, firing the explosive valves in the APS. A filter in each helium flow path traps debris from the explosive valve.

Downstream of the filter, each helium flow path has a normally open latching solenoid valve and two series-connected pressure regulators. The downstream regulator is set to a slightly higher output pressure than the upstream regulator; the regulator pair in the primary flow path produces a slightly higher output than the pair in the secondary (redundant) flow path. This arrangement causes lockup of the regulators in the redundant flow path after the propellant tanks are pressurized, while the upstream regulator in the primary flow path maintains the propellant tanks at their normal pressure of 184 psia. If either regulator in the primary flow path fails closed, the regulators in the redundant flow path sense a demand and open to pressurize the propellant tanks. If an upstream regulator fails open, control is obtained through the downstream regulator in the same flow path. Because the downstream regulator normally does not control the output pressure, an open failure of this regulator has no effect. If both regulators in the same flow path fail open, pressure in the helium manifold increases above the acceptable limit of 220 psia, causing the ASC HI REG caution light (panel 2) to go on. This alerts the astronauts to the fact that the failed-open regulators must be identified and the helium isolation solenoid valve in the malfunctioning flow path must be closed so that normal pressure can be restored. The regulator outlet pressure is sensed by redundant pressure transducers that supply inputs to the IS, for telemetry to MSFN. One of these pressure transducers supplies the input signal to the ASC HI REG caution light. Excessive pressure is vented by the relief valve assemblies in parallel with the propellant tanks. The solenoid valve is closed by setting the ASCENT He REG 1 or REG 2 switch (panel 1) to CLOSE; the talkback above the switch will change to a barber-pole display.

The primary and secondary helium flow paths merge downstream of the regulators to form a common helium manifold. The manifold routes the helium into two flow paths: one path leads to the oxidizer tank; the other, to the fuel tank. A quadruple check valve assembly, a series-parallel arrangement in each path, isolates the upstream components from corrosive propellant vapors. The check valves also safeguard against possible hypergolic action in the common manifold resulting from mixing of propellants or fumes flowing back from the propellant tanks. Two parallel compatibility explosive valves, downstream of each quadruple check valve assembly, seal off the propellant tank inlets, isolating the fuel and oxidizer (liquid and vapor) before initial ascent engine start. This reduces contamination problems involving helium components and prolongs the life of the pressure regulators. The fuel and oxidizer compatibility explosive valves are opened simultaneously with the helium isolation explosive valves before initial engine start. The four compatibility valves are arranged so that two fuel compatibility valves and two oxidizer compatibility valves, in parallel paths, lead to their propellant tanks. One fuel and one oxidizer compatibility valve has dual cartridges, the other two are fired by single cartridges. (See figure 2.3-20.)

Immediately upstream of the fuel and oxidizer tanks, each helium path contains a burst disk and relief valve assembly to protect the propellant tanks against overpressurization. This assembly vents pressure in excess of approximately 245 psia (relief valve cracking pressure) and reseals the flow path after overpressurization is relieved. A thrust neutralizer eliminates unidirectional thrust generated by the escaping gas. To prevent leakage through a faulty relief valve during normal operation, the burst disk is located upstream of the relief valve. The burst disk ruptures at a pressure slightly below the relief valve setting. The relief valves can pass the entire helium flow from a failed-open pair of regulators, preventing damage to the propellant tanks.

2.3.8.2 Propellant Feed Section. (See figure 2.3-18.)

The APS has one oxidizer tank and one fuel tank. Each tank has a temperature transducer that supplies propellant temperature signals to the FUEL and OXID TEMP indicators, and a pressure transducer that supplies ullage pressure signals to the FUEL and OXID PRESS indicators. (The same TEMP and PRESS indicators are used for the APS and DPS.) APS data are displayed when the PRPLNT TEMP/PRESS MON switch is set to ASC. A low-level sensor in each propellant tank causes the ASC QTY caution light (panel 2) to go on when the remaining propellant in either tank is sufficient for only 10 seconds of engine operation. The ASC QTY caution light is inhibited when the ascent engine is not operating.

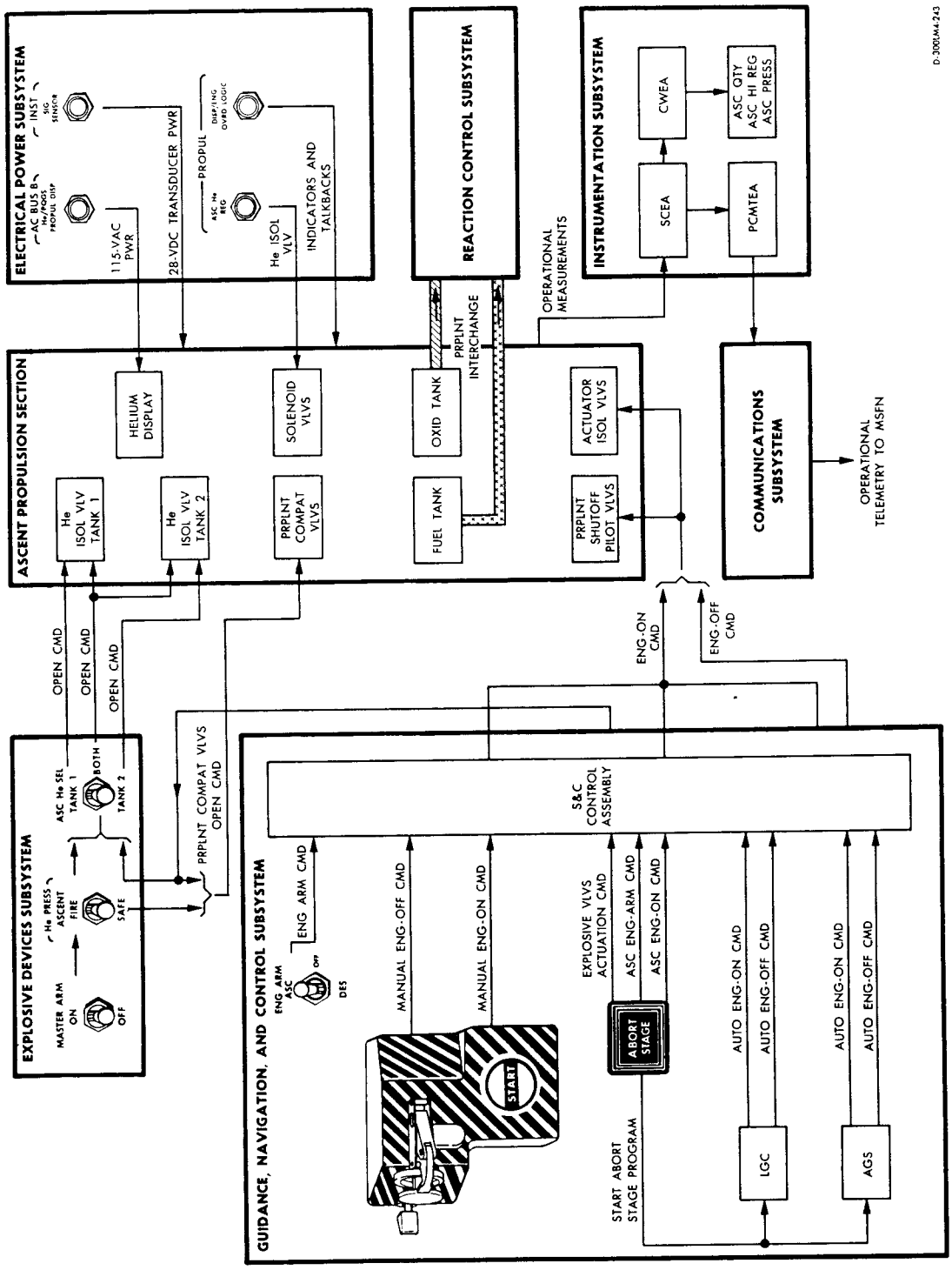

Figure 2.3-16. Ascent Propulsion Section - Interface Diagram

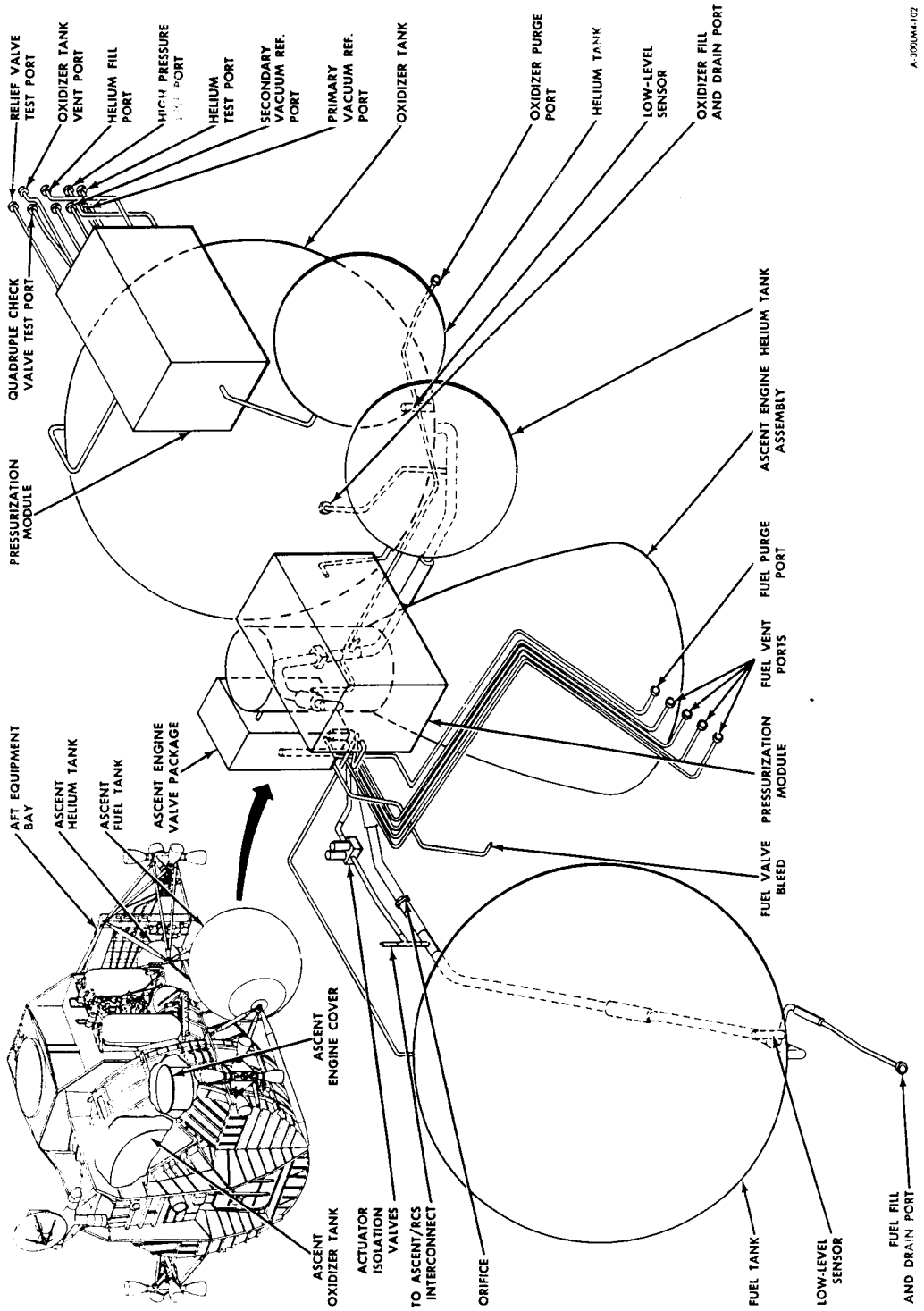

Figure 2.3-17. Ascent Propulsion Section - Component Location

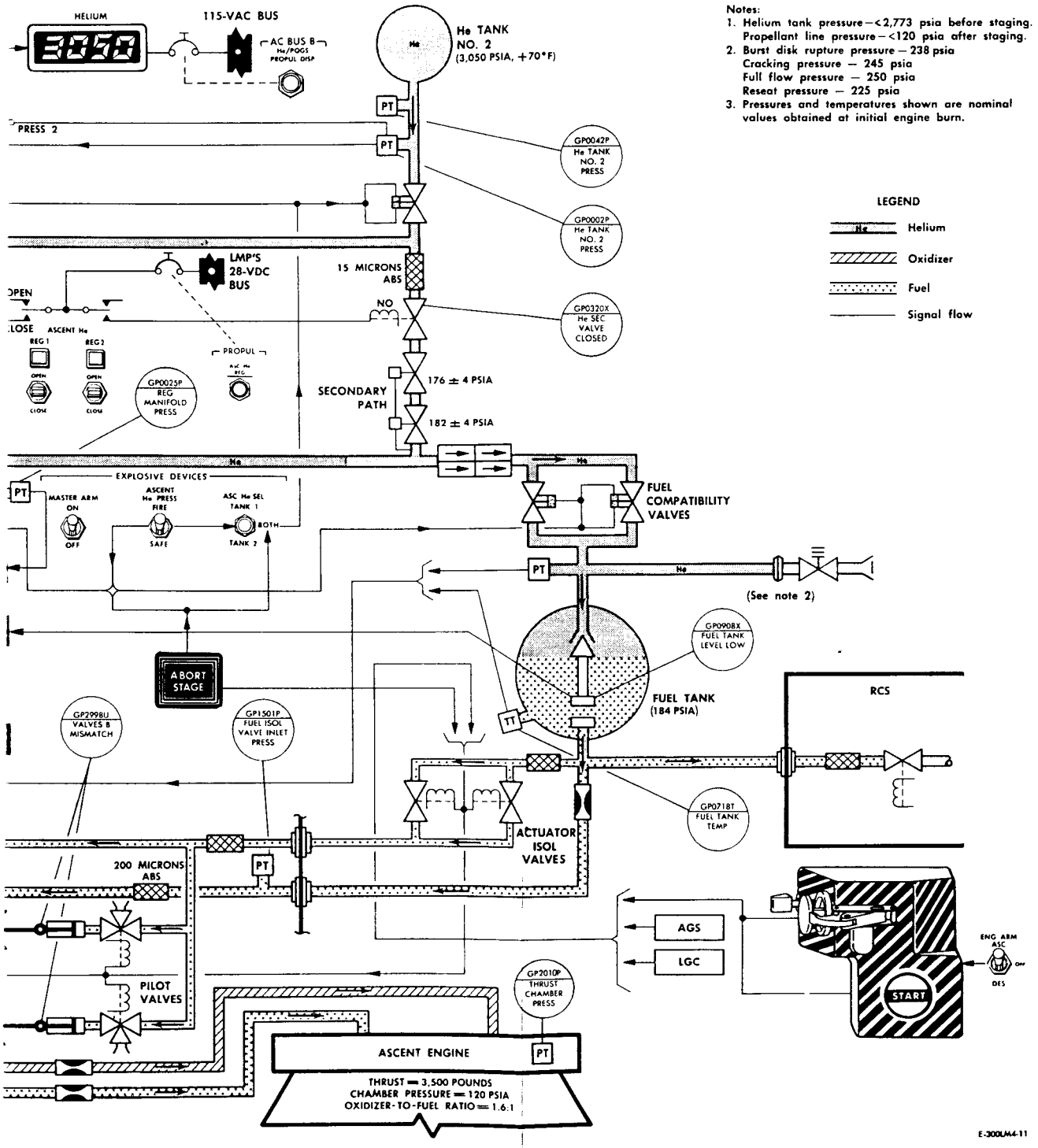

Figure 2.3-18. Ascent Propulsion Section - Simplified Functional Flow Diagram

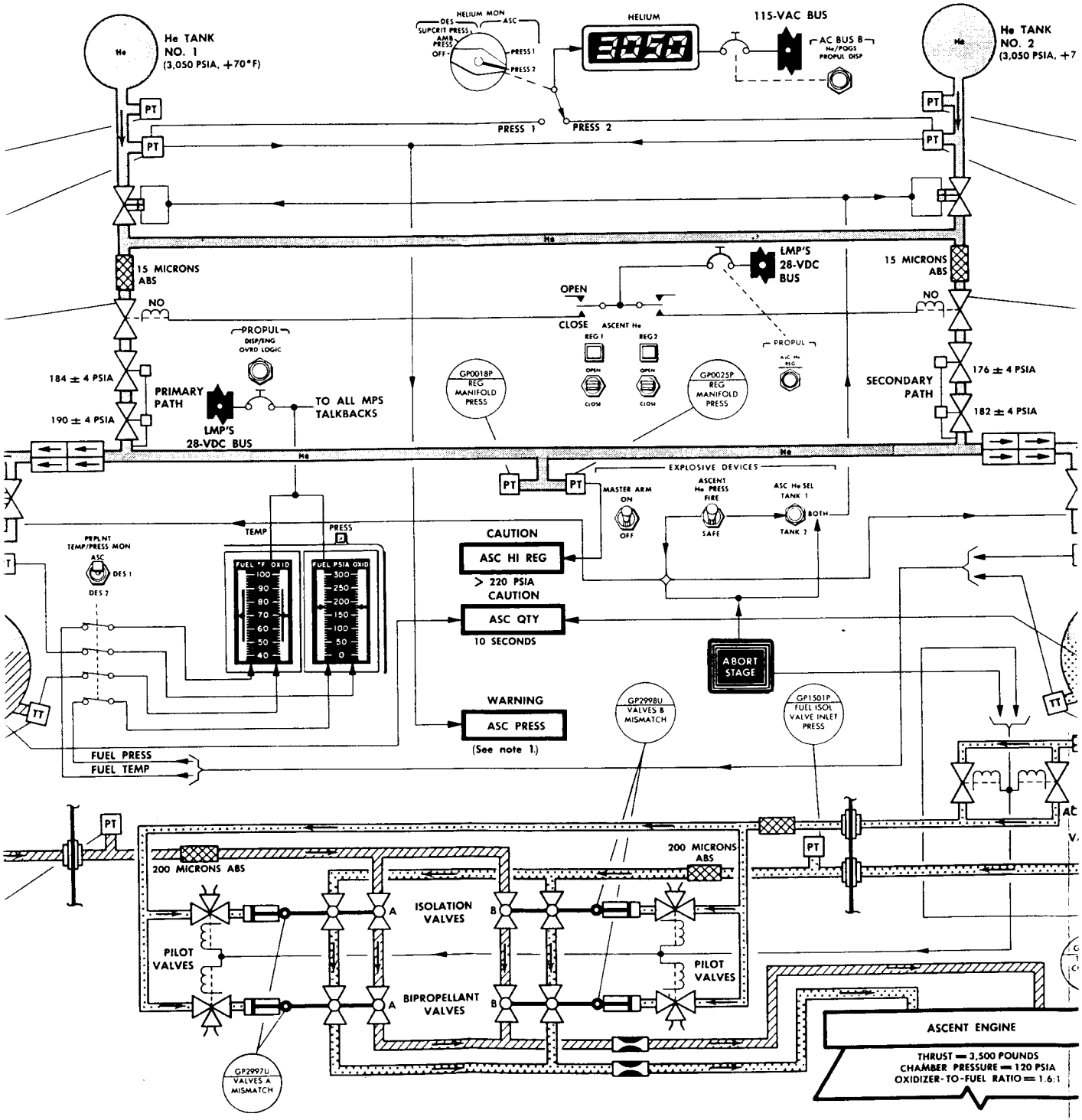

Figure 2.3-18. Ascent Propulsion

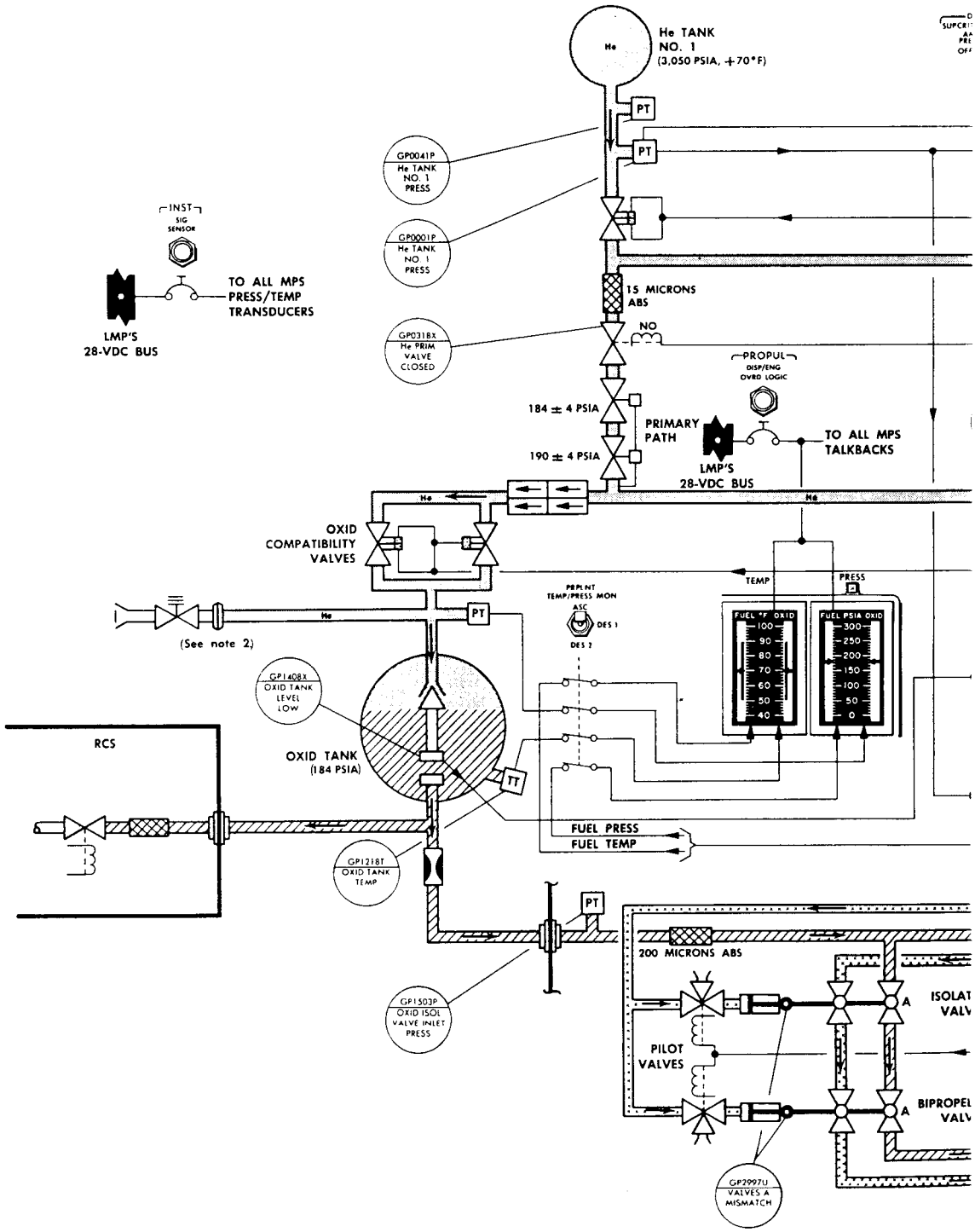
He TANK
NO. 1
(3,050 PSIA, +70°F)
He
PT
PT
GP0041P
He TANK
NO. 1
PRESS
GP0001P
He TANK
NO. 1
PRESS
INST
SIG
SENSOR
TO ALL MPS
PRESS/TEMP
TRANSDUCERS
LMP'S
28-VDC BUS
15 MICRONS
ABS
NO
GP0318X
He PRIM
VALVE
CLOSED
PROPUL
DISP/ENG
OVRD LOGIC
184 ± 4 PSIA
PRIMARY
PATH
190 ± 4 PSIA
TO ALL MPS
TALKBACKS
LMP'S
28-VDC BUS
He
He
OXID
COMPATIBILITY
VALVES
TEMP
PRESS
PRPLNT
TEMP/PRESS MON
ASC
DES 1
DES 2
FUEL °F
OXID
100
90
80
70
60
50
40
FUEL PSIA
OXID
300
250
200
150
100
50
0
He
PT
(See note 2)
GP1408X
OXID TANK
LEVEL
LOW
RCS
OXID TANK
(184 PSIA)
TT
FUEL PRESS
FUEL TEMP
GP1218T
OXID TANK
TEMP
PT
200 MICRONS ABS
GP1503P
OXID ISOL
VALVE INLET
PRESS
PILOT
VALVES
A
A
GP2997U
VALVES A
MISMATCH

Helium flows into the top of the fuel and oxidizer tanks. Diffusers at the top of the tanks uniformly distribute the helium throughout the ullage space. The outflow from each propellant tank divides into two paths. In the primary path, each propellant flows through a trim orifice to the propellant filter in the engine assembly, and then to the isolation and bipropellant valve assemblies (propellant shutoff valves). The trim orifice provides an engine interface pressure of 170 psia for proper propellant use. The secondary path connects the ascent propellant supply to the RCS. This interconnection, at the normally closed ascent feed solenoid valves (part of the RCS), permits the RCS to burn ascent propellants, providing the APS is pressurized and the ascent or descent engine is operating when the RCS thrusters are fired. A line branches off the RCS interconnect fuel flow path and leads to two parallel actuator isolation solenoid valves. From there, this line routes fuel to the engine pilot valves that actuate the propellant shutoff valves in the engine assembly. The normally closed actuator isolation valves prevent possible fuel loss through a leaking pilot valve before initial engine operation or during engine shutdown. The actuator isolation valves, and the propellant shutoff pilot valves in the engine assembly, are opened and closed simultaneously by engine-on and engine-off commands.

2.3.8.3 Engine Assembly. (See figure 2.3-19.)

The ascent engine is a fixed-injector, restartable, bipropellant rocket engine with an ablative combustion chamber, throat, and nozzle extension. Fuel and oxidizer enter the engine assembly through inlet ports at the interface flanges and are routed through the propellant filters and the propellant shutoff valves (isolation and bipropellant valve assemblies) to the injector; a separate fuel path (actuator pressure line) leads to the pilot valves, where fuel pressure actuates the propellant shutoff valves.

Propellant flow to the engine combustion chamber is controlled by a valve package assembly, trim orifices, and an injector assembly. The valve package assembly consists of eight propellant shutoff ball valves that make up the two fuel-and-oxidizer-coupled isolation valve assemblies and the two fuel-and-oxidizer coupled bipropellant valve assemblies, four actuators, and four solenoid-operated pilot valves. Inside the valve package assembly, the fuel and oxidizer passages divide into dual flow paths, with two series ball valves in each flow path. The paths rejoin at the valve package outlet. The propellant shutoff valves are arranged in fuel-oxidizer pairs; each pair is operated from a single crankshaft assembly by an individual fuel-pressure-operated actuator. Shaft seals and vented cavities prevent fuel and oxidizer from coming into contact with each other due to seepage along the shafts.

After the ascent propellants have been pressurized, the ascent engine can be started manually by setting the ENG ARM switch to ASC and by pressing the START pushbutton. Automatic starts are initiated by LGC or AGS engine-on commands. At engine start, the two actuator isolation valves in the propellant feed section, and the four pilot valves, are opened simultaneously, routing fuel into the actuator feed line and to the four pilot valves. When the solenoids of the pilot valves are energized, the pilot valve spools slide away from the fuel inlet ports and block the overboard vent ports. Fuel enters the actuator chambers and extends the actuator pistons, cranking the propellant shutoff valves 90° to the fully open position. The propellants now pass through the shutoff valves and trim orifices directly to the injector. The orifices determine the thrust level of the engine and the mixture ratio of the propellants by trimming the pressure differentials of the fuel and oxidizer. The physical characteristics of the injector establish an oxidizer lead of between 40 and 50 milliseconds. This precludes the possibility of fuel lead, which would result in rough engine starts.

At engine cutoff, the pilot valve solenoids are deenergized, opening the actuator ports to the overboard vents so that residual fuel in the actuators is vented into space. (See figure 2.3-17 for vent locations.) With the actuation fuel pressure removed, the actuator pistons are moved back by spring pressure, causing the propellant shutoff valves to turn 90° to the closed position.

The ascent engine assembly has transducers and valve position indicator switches for sensing fuel and oxidizer inlet pressures, thrust chamber pressure, and propellant shutoff valve positions. The transducer outputs are converted to telemetry data in the IS. These data are transmitted to MSFN, where they are used to monitor the performance of the ascent engine.

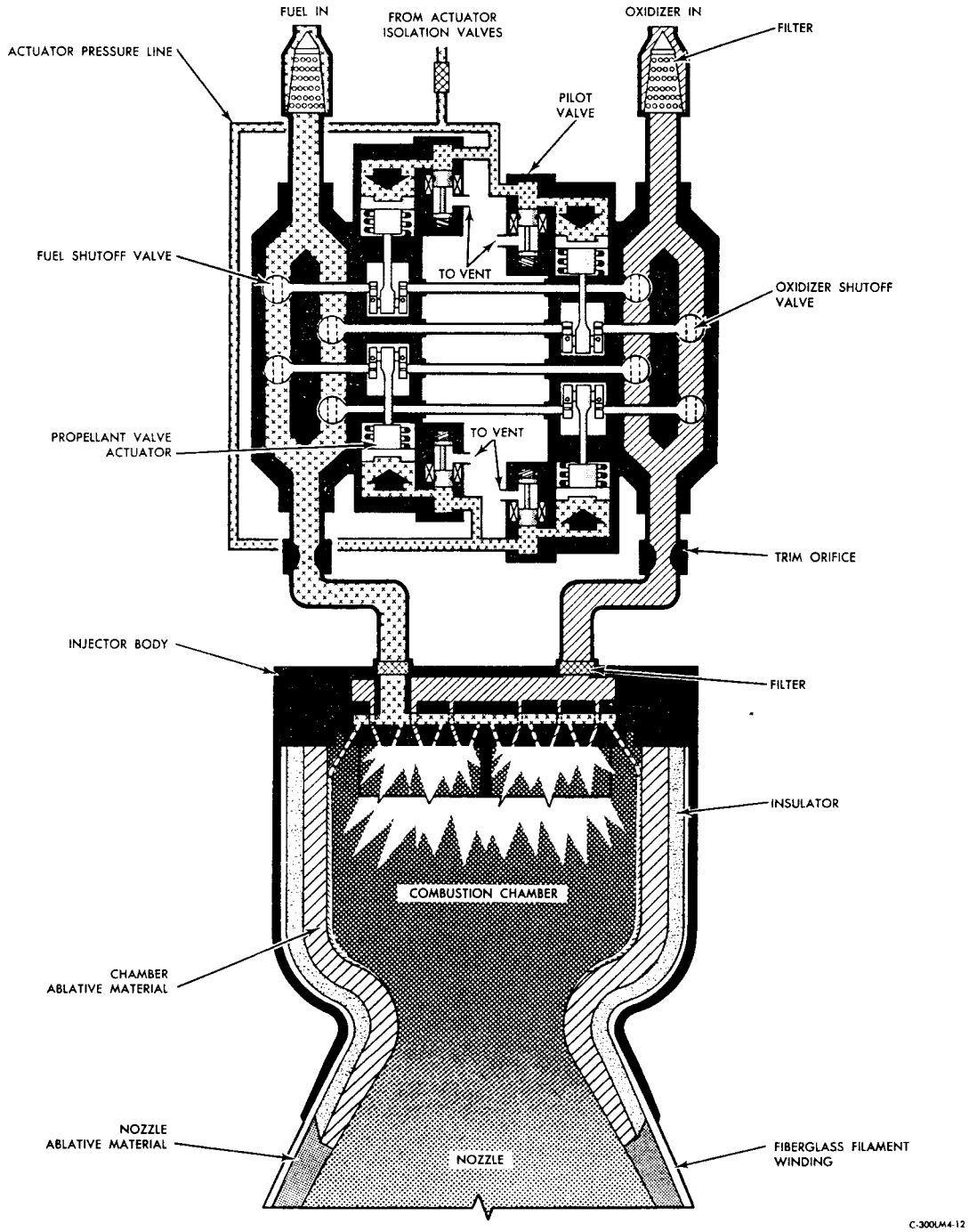

Figure 2.3-19. Ascent Engine Assembly - Flow Diagram

2.3.9 ASCENT PROPULSION SECTION MAJOR COMPONENT/FUNCTIONAL DESCRIPTION.

2.3.9.1 Explosive Valves. (See figure 2.3-20.)

A high-pressure helium isolation valve at each helium tank outlet, two low-pressure fuel compatibility valves (in parallel), and two low-pressure oxidizer compatibility valves (in parallel), are the explosive valves used in the APS. Normally, all helium isolation valves and compatibility valves are opened simultaneously by a command from the EDS control and fire circuits (or from the ABORT STAGE pushbutton on panel 1). The ASC He SEL switch (normally set to BOTH) permits isolating a defective helium tank by setting the switch to TANK 1 or TANK 2, thereby firing either helium isolation valve individually. The ASC He SEL switch determines which helium isolation valves will be opened, regardless of whether manual, automatic, or abort stage fire commands are issued. To prevent valve failure in the closed position, the two high-pressure helium isolation valves have dual cartridges that are fired simultaneously by redundant systems in the EDS. The fuel and oxidizer compatibility valves are in redundant parallel flow paths. To ensure propellant tank pressurization, one fuel valve and one oxidizer valve are fired by dual cartridges, the other two compatibility valves are fired by single cartridges. A cartridge is fired by applying power to the initiator bridgewire for a few milliseconds. The resultant heat fires the initiator, generating gases in the valve explosion chamber at an extremely high rate. The gases drive the valve piston into the valve housing to open the valve by shearing a closure disk and aligning the piston port permanently with the pressure line plumbing.

2.3.9.2 Helium Isolation Solenoid Valves. (See figure 2.3-8.)

The helium isolation solenoid valves in the APS are identical with those in the DPS except that they are actuated by the ASCENT He REG 1 and REG 2 switches and their position indicator switch signal is fed to the ASCENT He REG 1 and REG 2 talkbacks. (Refer to paragraph 2.3.4.4 for a description of the helium isolation solenoid valves.)

2.3.9.3 Helium Pressure Regulator Assemblies. (See figure 2.3-21.)

Each helium pressure regulator assembly consists of two individual pressure regulators connected in series. The downstream regulator functions in the same manner as the upstream regulator; however, it is set to produce a higher outlet pressure so that it becomes a secondary unit that will only be in control if the upstream regulator (primary unit) fails open.

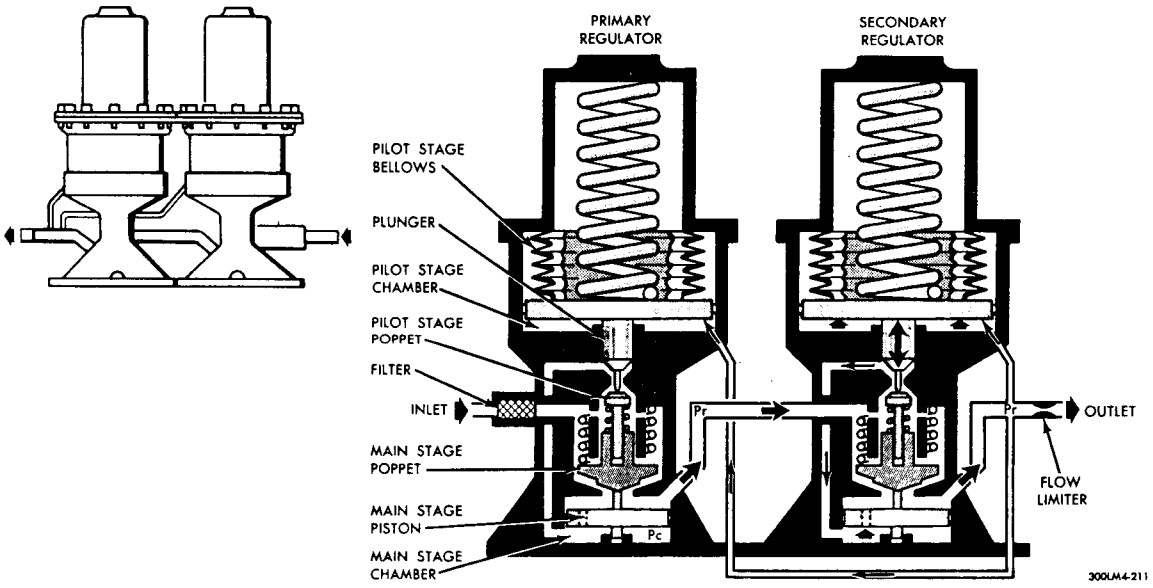

Figure 2.3-21. Ascent Propulsion Section - Helium Pressure Regulator Assembly

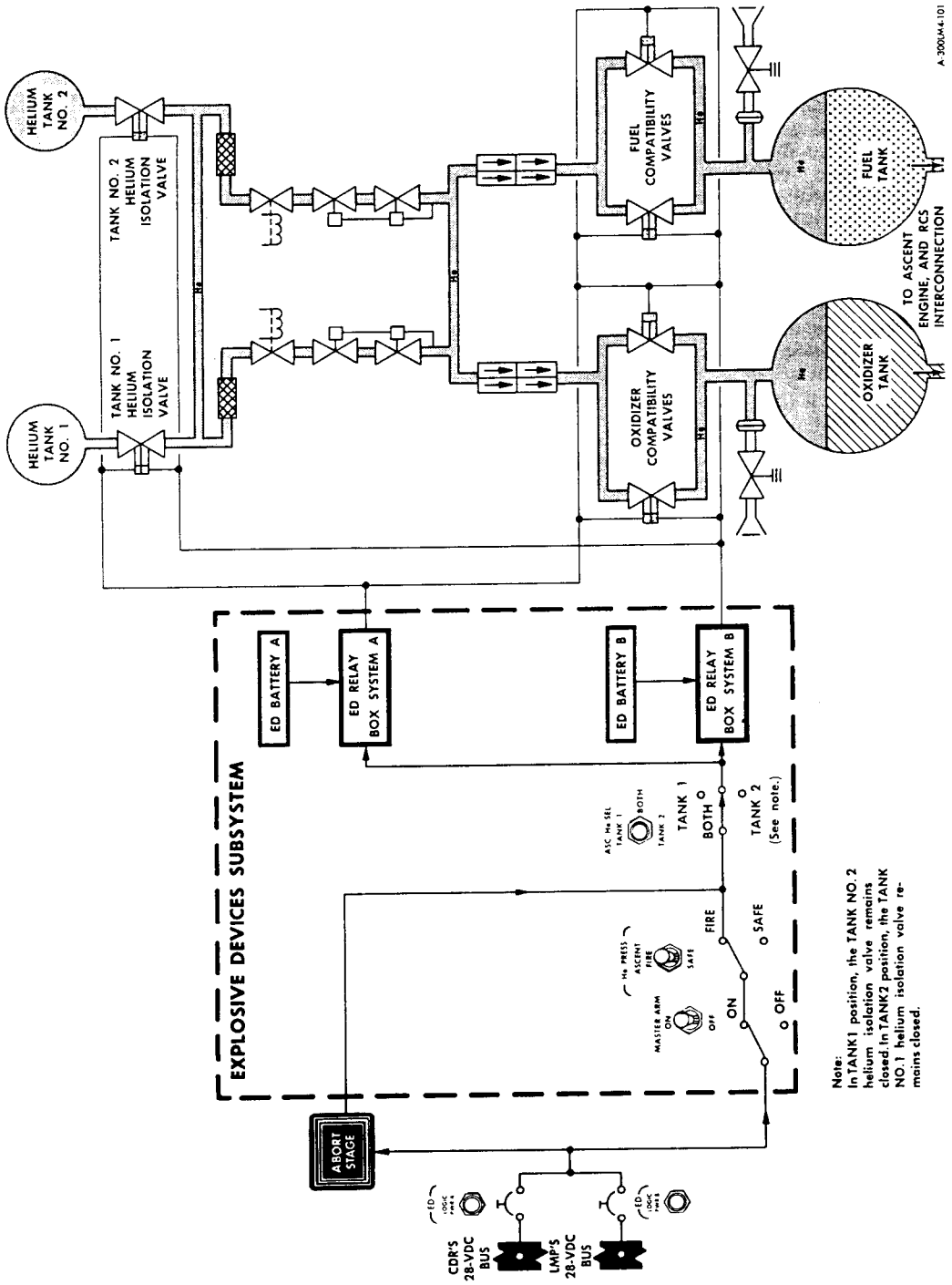

Figure 2.3-20. Ascent Propulsion Section - Explosive Valves, Simplified Functional Diagram

Each pressure regulator unit consists of a direct-sensing main stage and a pilot stage. The valve in the main stage is controlled by the valve in the pilot stage which senses small changes in the regulator outlet pressure (Pr) and converts these changes to proportionally larger changes in control pressure (Pc). The main stage valve poppet is positioned for varying flow demands by changes in the control pressure acting on the main stage piston. A reduction in flow demand causes a rise in the regulator outlet pressure because flow from the regulator exceeds the new downstream demand. The rise in outlet pressure decreases the pilot valve output, thereby reducing flow into the main stage chamber. Because the main stage chamber bleeds directly into the regulator outlet line (through a fixed orifice), reduced flow into the chamber causes a proportional reduction in the control pressure, which, in turn, moves the main stage valve poppet toward the closed position. The resultant reduced flow through the main stage valve matches the downstream flow demand. An increase in the downstream demand causes a reduction in outlet pressure which tends to open the pilot valve. The resultant increase in control pressure causes the main stage valve poppet to open, thus meeting the increased downstream demand.

The flow limiter at the outlet of the main stage valve of the secondary unit restricts maximum flow through the regulator assembly to 5.5 pounds of helium per minute, so that the propellant tanks are protected if the regulator fails open. The filter at the inlet of the primary unit prevents particles, which could cause excessive leakage at lockup, from reaching the regulator assembly.

2.3.9.4 Relief Valve Assemblies. (See figure 2.3-22.)

Each helium pressurization line leading to the propellant tanks has a relief valve assembly that consists of a burst disk in series with a relief valve. The redundancy within each relief valve assembly ensures against helium loss during normal operation and protects the propellant tanks against inadvertent overpressurization. The burst disk is held in place by the automatic initiator assembly. When pressure in the pressurization line exceeds approximately 226 psi, the tensile member breaks, causing the helium pressure and the force of the initiator spring to rupture the burst disk. The helium then enters the relief valve chamber and acts against the relief valve piston, overcoming the main poppet spring, and lifting the poppet off its seat. This opens the helium pressurization line to vent the excess helium overboard. A thrust neutralizer at the oulet port prevents generation of unidirectional thrust. A filter at the inlet to the relief valve chamber prevents particles from lodging in the valve seat. When helium pressure drops below the reseat pressure, the relief valve poppet closes to prevent further helium loss. Before burst disk rupture, the light bleed valve spring keeps the bleed poppet slightly off its seat. This permits a low pressure to be vented and prevents pressure buildup in the relief valve chamber in case of a slight burst disk leak. If the leakage pressure builds up, the force of the bleed valve spring is overcome and the bleed poppet closes. Pressure then continues to build up and work against the relief valve piston. When the pressure reaches approximately 245 psi, the relief valve cracks.

2.3.9.5 Propellant Storage Tanks.

The propellant supply is contained in two spherical titanium tanks. The tanks are of identical size and construction. On tank contains fuel; the other, oxidizer. A helium diffuser at the inlet port of each tank distributes the pressurizing helium uniformly into the tank. An antivortex device (a cruciform at each tank outlet) prevents the propellant from swiriling into the outlet port, precluding helium ingestion into the engine. Each tank outlet also has a propellant retention device that permits unrestricted propellant flow from the tank under normal pressurization, but blocks reverse propellant flow (from the outlet line back into the tank) under zero-g or negative-g (better than -2g) conditions. This arrangement ensures that helium does not enter the propellant outlet line while the engine is not firing, thus it eliminates the possibility of engine malfunction due to helium ingestion. A low-level sensor in each tank (approximately 4.4 inches above the tank bottom) supplies a discrete signal that causes the ASC QTY caution light to go on when the propellant remaining in either tank is sufficient for approximately 10 seconds of burn time (48 pounds of fuel, 69 pounds of oxidizer minimum).

2.3.9.6 Valve Package Assembly. (See figure 2.3-23.)

At the propellant feed section/engine assembly interface, the oxidizer and fuel lines lead into the valve package assembly. The individual valves that make up the valve package assembly are in a series-parallel arrangement to provide redundant propellant flow paths and shutoff capability. The valve package assembly consists of two bipropellant valve assemblies, two isolation valve assemblies,

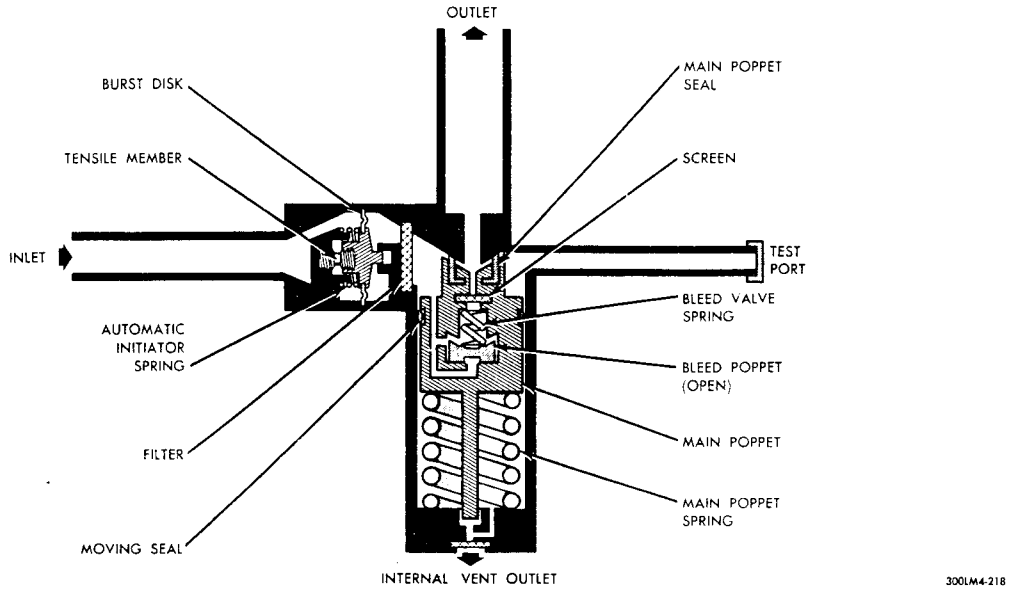

Figure 2.3-22. Ascent Propulsion Section - Relief Valve Assembly

and four solenoid-operated pilot valve and actuator assemblies. Each bipropellant valve assembly and each isolation valve assembly consists of one fuel shutoff valve and one oxidizer shutoff valve. These are ball valves that are operated by a common shaft, which is connected to its respective pilot valve and actuator assembly. Shaft seals and vented cavities prevent the propellants from coming into contact with each other. Separate overboard vent manifold assemblies drain the fuel and oxidizer that leaks past the valve seals, and the actuation fluid (fuel in the actuators upon pilot valve closing), overboard. (See figure 2.3-17.) The eight shutoff valves open simultaneously to permit propellant flow to the engine while it is operating; they close simultaneously to terminate propellant flow at engine shutdown. The two isolation valve assemblies are exposed to the full pressure of the propellant feed system. The four nonlatching, solenoid-operated pilot valves control the actuation fluid (fuel) for the isolation and bipropellant valve assemblies. Normally, the solenoids are deenergized, and the actuation fuel is shut off by action of the spring-loaded spools blocking the inlet ports. The back sides of the actuator chambers are vented to eliminate fuel buildup due to leakage. When the solenoids are energized, all pilot valves are opened and the actuation fuel enters the actuators where it acts against the spring-loaded actuator piston to open the shutoff (ball) valves. At this point, the pilot valve spools seal off the vent port. When the electrical signal is removed, spring action forces the valve spools to seal off the actuation fuel. The propellant shutoff valves are closed by the return action of the actuator piston springs, and the actuation fuel trapped in the actuator chamber and valve passages is expelled through the pilot valve vent ports.

2.3.9.7 Injector Assembly.

The injector assembly consists of the propellant inlet lines, a fuel manifold, a fuel reservoir chamber, an oxidizer manifold, and an injector orifice plate assembly. It takes longer to fill the fuel manifold and reservoir chamber assembly. Consequently, the oxidizer reaches the combustion chamber approximately 50 milliseconds before the fuel, resulting in smooth engine starts. The injector orifice plate assembly is of the fixed-orifice type, which uses a baffle and a series of perimeter slots (acoustic cavities) for damping induced combustion disturbances. The baffle is Y-shaped, with a 120° angle between each blade. The baffle is cooled by the propellants, which subsequently enter the combustion chamber through orifices on the baffle blades. The injector assembly face is divided into two combustion zones: primary and baffle. The primary zone uses impinging doublets (one fuel and one

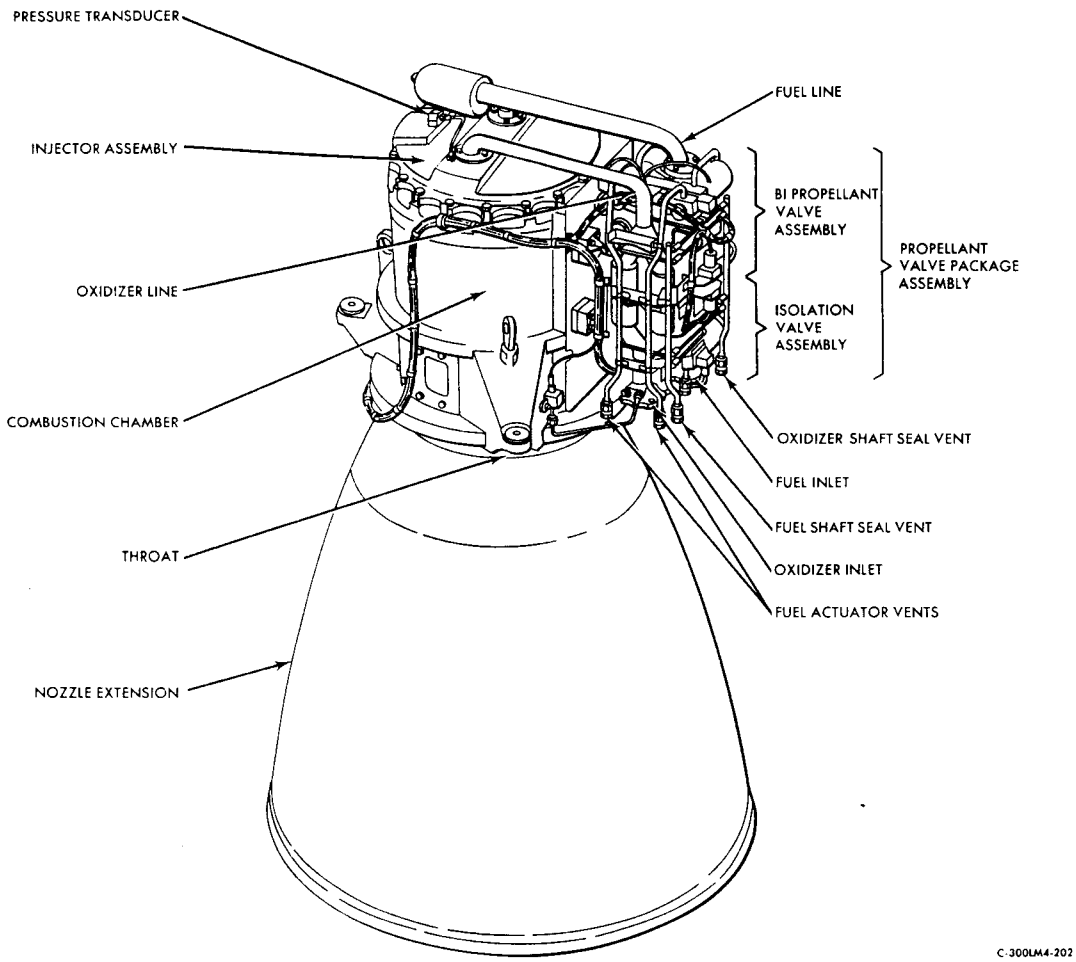

Figure 2.3-23. Ascent Engine Assembly

oxidizer), which are spaced in concentric radial rings on the injector assembly face. The baffle zone (1.75 inches downstream from the injector face) uses impinging doublets placed at an angle to the injector face radius. Film-cooling of the combustion chamber wall is achieved by injecting fuel through orifices spaced around the perimeter of the injector. Parallel orifices inject fuel parallel to the engine centerline; canted orifices inject fuel against the chamber wall to form a film of fuel. The nominal propellant temperature is +70° F as it enters the injector. The temperature range is +50° F to +90° F; the fuel temperature is within 10° F of the oxidizer temperature. The temperature range at engine start may be +40° to +500° F (restart at peak heat soakback).

2.3.9.8 Combustion Chamber Assembly.

The combustion chamber assembly consists of an engine case and mount assembly and a plastic assembly, which includes the nozzle extension. The engine case and mount assembly is bonded and locked to the plastic assembly to form an integral unit. The plastic assembly provides ablative cooling for the combustion chamber; it consists of the chamber ablative material, the chamber insulator, the nozzle extension ablative material, and a structural filament winding. The chamber ablative material

extends from the injector to an expansion ratio of 4.6. The chamber insulator, between the ablative material and the case, maintains the chamber skin temperature within design requirements. The ablative material of the nozzle extension extends from the expansion ratio of 4.6 to 45.6 (exit plane) and provides ablative cooling in this region. The structural filament winding provides the structural support for the plastic assembly and ties the chamber and nozzle extension sections together.

2.3.10 ASCENT PROPULSION SECTION PERFORMANCE AND DESIGN DATA.

The performance and design data for the APS are given in table 2.3-2.

Table 2.3-2. Ascent Propulsion Section - Performance and Design Data

Pressurization section	
Helium tank initial filling weight	6.5 pounds per tank
Minimum usable helium weight	5.1 pounds per tank
Helium tank initial pressure and temperature	3,050 psia at +70° F
Helium tank volume	3.35 cubic feet
Helium tank maximum operating pressure and temperature	3,500 psia at +140° F
Helium tank proof pressure	4,650 psia at +160° F
Helium tank burst pressure	5,250 psia at +160° F
Helium filters	
Absolute filtration	15 microns
Nominal filtration	5 microns
Helium pressure regulator assemblies	
Primary path outlet pressure	
Upstream regulator	184±4 psia
Downstream regulator	190±4 psia
Secondary path outlet pressure	
Upstream regulator	176±4 psia
Downstream regulator	182±4 psia
Maximum lockup pressure	203 psia
Maximum outlet flow rate (each regulator path)	5.5 pounds per minute
Inlet pressure range	400 to 3,500 psia
Nominal helium flow rate	1.45 pounds per minute
Quadruple check valve assemblies	
Opening pressure	2.0 to 2.88 psid
Maximum operating inlet pressure	270 psia
Maximum pressure drop	4.5 psi at 2.13 pounds per minute

Table 2.3-2. Ascent Propulsion Section - Performance and Design Data (cont)

Pressurization section (cont)	
Compatibility explosive valves operating pressure range	100 to 270 psia
Relief valve assembly	
Burst-disk rupture pressure	226 to 250 psia
Relief valve cracking pressure	245 psia
Full-flow pressure	250 psia
Reseat pressure (minimum)	225 psia
Fully open flow rate (minimum)	4 pounds per minute
Propellant feed section	
Propellant tanks	
Capacity (each tank)	36 cubic feet
Total fuel	2,008 pounds
Total oxidizer	3,179 pounds
Ullage volume (minimum)	0.5 cubic foot per tank at +90° F
Usable fuel	1,993 pounds
Unusable fuel	6 pounds
Usable oxidizer	3,190 pounds
Unusable oxidizer	35 pounds
Propellant temperature range	+50° to +90° F
Nominal propellant temperature	+70° F
Nominal ullage pressure	184 psia
Proof pressure	333 psia
Burst pressure	375 psia
Trim-orifice outlet pressure	165±4 psia
Engine assembly	
Propellant filters	
Nominal filtration	175 microns
Absolute filtration	200 microns
Fuel flow rate	4.3 pounds per second
Oxidizer flow rate	7.0 pounds per second
Propellant injection ratio (oxidizer to fuel)	1.6:1

Table 2.3-2. Ascent Propulsion Section - Performance and Design Data (cont)

Engine Assembly (cont)	
Propellant feed section	
Engine thrust	3,500 pounds
Injector inlet pressure	
Steady-state operation	170 psia
Engine start to 90% of rated thrust	0.310 second
Engine shutdown to 10% of rated thrust	0.200 second
Combustion chamber pressure	120 psia
Nominal propellant temperature at injector inlet	+70° F
Approximate maximum weight	180 pounds
Overall length	47 inches
Nozzle exit diameter	34 inches

2.3.11 ASCENT PROPULSION SECTION OPERATIONAL LIMITATIONS AND RESTRICTIONS.

The operational limitations and restrictions for the APS are as follows:

- Propellant tank pressure before pressurization must be between 62 and 205 psia. If these limits are exceeded during dynamic loading, structural failure in the propellant tanks may result, causing loss of the LM.
- Propellant bulk temperature before ascent engine start must be between +50° and +90° F. If the temperature limits are exceeded, the engine performance will be degraded.
- Before ascent engine starts (except FITH with DPS burn), the RCS +X-axis thrusters must be fired to establish proper propellant tank ullage, to settle the propellants under weightless conditions, and to prevent helium from entering the RCS interconnect lines. Unsettled or insufficiently settled propellants may result in rough or erratic starts that could lead to engine failure.
- The APS must not remain pressurized longer than 24 hours before anticipated termination of use. If this limit is exceeded, the pressure regulator assemblies will exceed their qualified propellant exposure time.
- In the blow-down mode, it is not desirable that the ascent engine be operated when chamber pressure has decayed to less than 112 psia. At a pressure of less than 114 psia, firing should be terminated unless engine operation is critical to mission success.

2.4 REACTION CONTROL SUBSYSTEM.

2.4.1 INTRODUCTION.

The Reaction Control Subsystem (RCS) stabilizes the LM during descent, helps to maintain the desired trajectory during ascent, and controls LM attitude and translation about, or along, all axes during hover, rendezvous, and docking maneuvers. It also provides acceleration for propellant settling in the descent and ascent propellant tanks. Attitude and translation are controlled with 16 RCS thrust chamber assemblies (TCA's), which are fed by the RCS propellant supplies or by propellants from the ascent propulsion section (APS) of the Main Propulsion Subsystem (MPS). The 16 TCA's are arranged in clusters of four, mounted on four outriggers that are equally spaced around the LM ascent stage. In each cluster, two TCA's are mounted parallel to the LM X-axis, facing in opposite directions; the other two are spaced 90° apart, in a plane normal to the X-axis and parallel to the Y-axis and Z-axis. (See figure 2.4-1.) Four plume deflectors are attached to the descent stage, extending upward to the nozzle of each downward-firing TCA. These deflectors are shields that prevent the downward exhaust plume from damaging the LM structure.

The RCS consists of two parallel, independent systems (A and B), which, under normal conditions, function simultaneously. Each system has its own pressurized propellant supply that feeds eight TCA's (two in each cluster). The arrangement of the TCA's is such that either system, functioning alone, can provide complete control in all axes, with some translation effects. Moreover, if the propellant supply of one system is depleted or fails, a crossfeed capability permits routing propellants from the operative system to all 16 TCA's.

Fuel and oxidizer are loaded into bladders within the propellant tanks and into the manifold plumbing that extends from the tanks through the normally open main shutoff valves up to the TCA solenoid valves. Before separation of the LM from the CSM, the TCA's are heated to their operating temperature and the explosive valves are fired. Gaseous helium, reduced to a working pressure, enters the propellant tanks and forces the fuel and oxidizer to the TCA's. Here, the

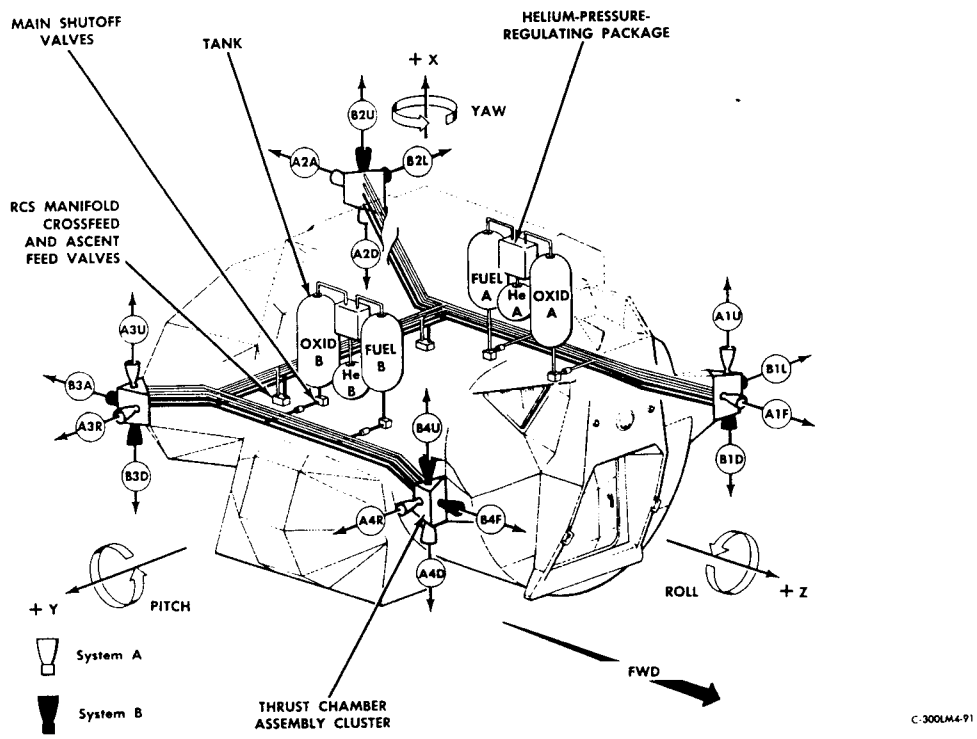

Figure 2.4-1. Reaction Control Subsystem - Component Location

propellants are blocked by normally closed fuel and oxidizer valve assemblies until a thruster-on command is issued. As the selected TCA receives a thruster -on command, its fuel and oxidizer valve assemblies open to route the propellants through the TCA injector into the combustion chambers, where they impinge and ignite. Switches on panel 2 (LGC THRUSTER PAIR CMDS) generate signals for the LGC, telemetry, and caution and warning talkbacks to indicate the status of the thrusters.)

2.4.2 SUBSYSTEM INTERFACES. (See figure 2.4-2.)

Transducer and valve position indicator switch outputs that originate in the RCS are processed by the Instrumentation Subsystem (IS). The operational measurements that are monitored throughout the mission are transmitted via the Communications Subsystem (CS) to MSFN. The IS also processes RCS caution and warning signals. The RCS propellant tanks are pressurized immediately before separation of the LM from the CSM, by firing of explosive valves by the Explosive Devices Subsystem (EDS). Interconnect plumbing between the TCA feed lines and the APS propellant tanks permits the RCS to use APS propellants during certain phases of the mission, thereby conserving the RCS supply. The RCS receives 28-volt d-c primary power through the Commander's and LM Pilot's buses of the Electrical Power Subsystem (EPS).

The Guidance, Navigation, and Control Subsystem (GN&CS) provides commands that select and fire TCA's for durations ranging from a pulse of less than 1 second to steady-state operation. The TCA's can be operated in an automatic mode, an attitude hold mode, or a manual override mode. RCS operation can be controlled by the primary guidance and navigation section (PGNS) or by the abort guidance section (AGS). A detailed description of RCS operation by the GN&CS is given in paragraph 2.1.3.5. The control circuitry is shown in figure 2.1.17.

Normally, translation and attitude are controlled by the PGNS in the automatic mode, in which all navigation, guidance, stabilization, and steering functions are controlled by the LM guidance computer (LGC). Under AGS control, the abort electronics assembly (AEA) and the attitude and translation control assembly (ATCA) take the place of the LGC.

The attitude hold mode provides semiautomatic operation. In this mode, either astronaut can manually determine attitude changes by displacing his attitude controller assembly (ACA), and three-axis translation changes by displacing his thrust/translation controller assembly (TTCA). When the ACA is displaced, an impulse proportional to the amount of displacement is routed to the LGC. The LGC uses this impulse to perform steering calculations and to generate a thruster-on command. The thruster-on command is routed to appropriate jet drivers in the ATCA, firing selected TCA's. A display and keyboard (DSKY) input to the LGC determines whether the LGC commands an angular rate change proportional to ACA displacement, or a minimum impulse for each ACA displacement. When the ACA is returned to the detent position, the LGC sends a command to hold the attitude. For translation, displacement of the TTCA sends a discrete to the LGC, which sends a thruster-on command to selected TCA's. When the TTCA is returned to neutral, the TCA's are turned off.

In the attitude hold mode, under AGS control, the AEA generates attitude errors that are summed, in the ATCA, with proportional rate commands from the ACA and a rate-damping signal from the rate gyro assembly (RGA). The ATCA then performs the steering calculations and generates the thruster on and off commands. Two or four X-axis TCA's for translation maneuvers and a manual override for attitude control in each axis (2-jet direct) can be selected. The four upward-firing TCA's can be inhibited to conserve RCS propellants during the ascent engine thrust phase.

The manual override mode, under PGNS or AGS control, overrides the automatic mode. The four-jet hardover command from the ACA is a manual override command, which is applied directly to the TCA's. The hardover output fires four TCA's simultaneously.

For MPS propellant-settling maneuvers, two or four downward-firing TCA's can be selected. Under PGNS control, the selection is manually keyed into the DSKY for routing to the LGC. Under AGS control, the selection is made by setting the ATT/TRANSL switch (panel 1) to the 2 JETS or 4 JETS position. Under manual control, pressing the +X TRANSL pushbutton (panel 5) provides a command to operate the four downward-firing TCA's, which continue firing until the pushbutton is released. Firing two TCA's conserves RCS propellants; however, it requires a longer firing time to

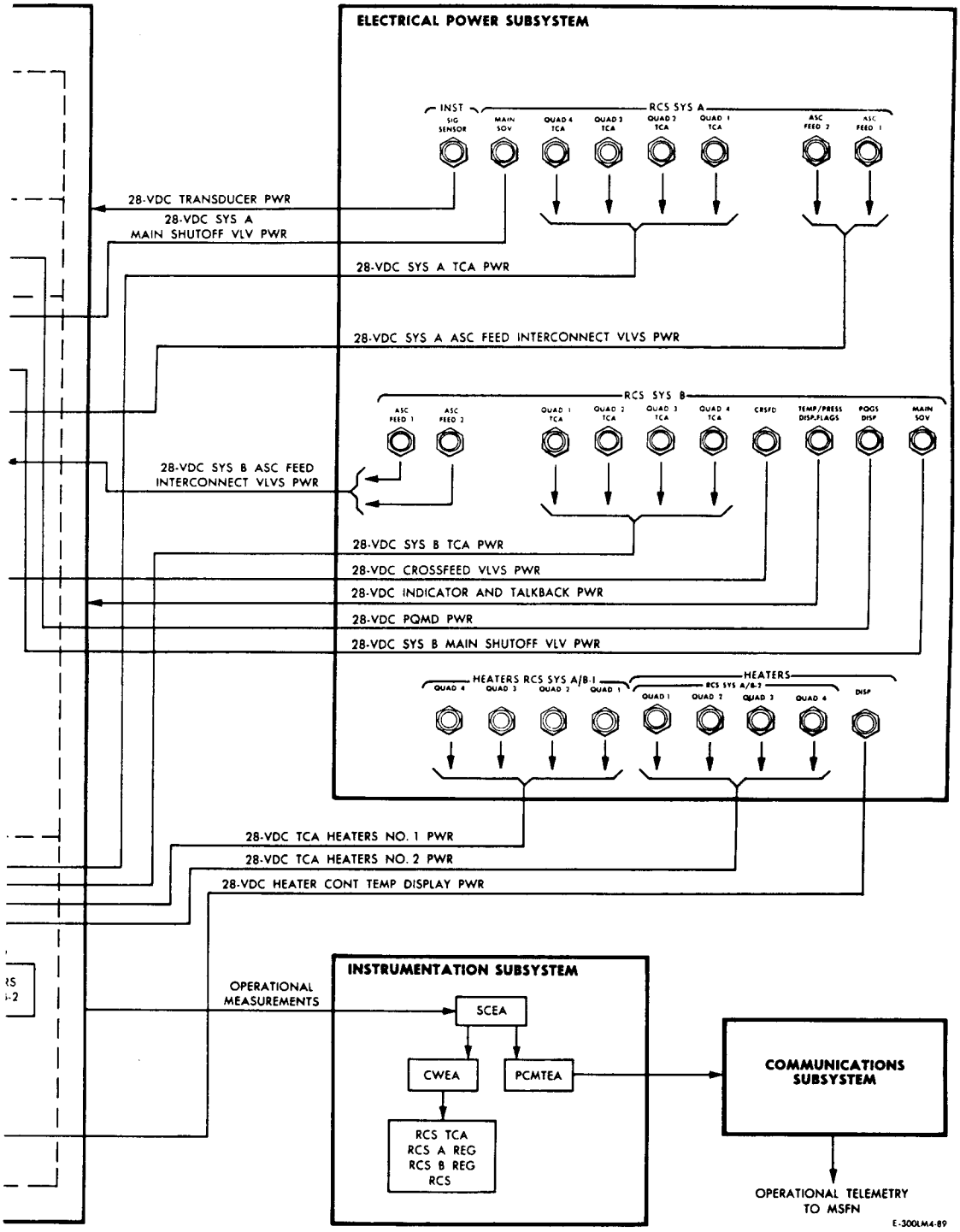

Figure 2.4-2. Reaction Control Subsystem - Interface Diagram

settle the MPS propellants. Before staging, firing of four TCA's may be necessary because thermal impingement on the descent stage skin limits operating time for the downward-firing TCA's to 40 seconds.

2.4.3 FUNCTIONAL DESCRIPTION. (See figure 2.4-3.)

Functionally, each RCS system (A or B) can be subdivided into a helium pressurization section, a propellant section, a propellant quantity measuring device, and eight TCA's. All RCS components are located in the ascent stage. Because RCS systems A and B are identical, only one system is described.

2.4.3.1 Helium Pressurization Section.

Approximately 1 pound of gaseous helium, at a nominal pressure of 3,050 psia at +70° F, is stored in the helium tank. Flow from the tank separates into two parallel paths. Each flow path contains a normally closed explosive valve that isolates the helium tank from the downstream components before RCS pressurization. A sensor (part of the propellant quantity measuring device) in the helium tank senses the pressure-temperature ratio of the helium. The sensor output is conditioned and routed to the A or B QUANTITY indicator (panel 2), which indicates the combined (fuel and oxidizer) percentage of propellants remaining. A pressure transducer at the outlet port of the helium tank monitors the helium pressure. It supplies a signal to the PRESS indicator (panel 2) when the TEMP/PRESS MON selector switch (panel 2) is set to He. (When the switch is set to He, the X10 light of the PRESS indicator goes on to indicate that the values displayed must be multiplied by 10.) The pressure transducer also supplies a signal that causes the RCS caution light (panel 2) to go on, when helium pressure at the tank outlet port drops below 1,700 psia. When a caution or warning light goes on, a signal is routed from the caution and warning electronics assembly (CWEA) in the IS to light the MASTER ALARM pushbutton/lights (panels 1 and 2) and to provide a 3-kc tone in the astronaut headsets. Pressing either MASTER ALARM pushbutton/light turns off both lights and terminates the tone, but has no effect on the caution or warning light.

When the MASTER ARM switch (panel 8) is set to ON and the RCS He PRESS switch is set to FIRE, the explosive valves open simultaneously to pressurize the RCS. Because of the redundant paths, failure of one explosive valve does not affect pressurization of the propellant tanks. Downstream of the explosive valves, the two flow paths merge and the helium flows through a filter that prevents contamination of downstream components by trapping debris generated by firing the cartridges in the explosive valves. A restrictor orifice, downstream of the filter, dampens the initial helium surge, thereby minimizing the possibility of rupturing the burst disk in the downstream pressure relief valve assemblies.

Downstream of the restrictor, the flow path contains two series-connected pressure regulators. The primary (upstream) regulator is set to reduce pressure to approximately 181 psia. The secondary (downstream) regulator is set for a slightly higher output (approximately 185 psia). In normal operation, the primary regulator provides proper propellant tank pressurization. A pressure transducer senses the pressure at the output of the regulators and provides an input to the PRESS indicator via the TEMP/PRESS MON selector switch (PRPLNT position). If one regulator fails closed, or if both regulators fail open, the downstream pressure decreases or increases beyond acceptable limits (minimum pressure of 165 psia; maximum pressure of 218.8 psia) and the RCS A REG or RCS B REG warning light (panel 1) goes on. (If the main propellant shutoff valves are closed, this warning light is inhibited and does not go on, regardless of the pressure at the helium regulator manifold.) Downstream of the pressure regulators, a helium manifold divides the flow into two paths: one leads to the oxidizer tank; the other, to the fuel tank. Each flow path has quadruple check valves in a series-parallel arrangement to prevent backflow of propellant vapors into the helium manifold if seepage occurs in the propellant tank bladders. The helium flows through the check valves into the propellant tanks. A relief valve assembly at the inlet port of each propellant tank protects the propellant tank against overpressurization. If pressure in the helium lines exceeds 220 psia, a burst disk in the relief valve assembly ruptures. When the pressure reaches 232 psia, helium is vented overboard through the relief valve vent port. When the pressure drops below 212 psia, the relief valve closes, permitting normal system operation.

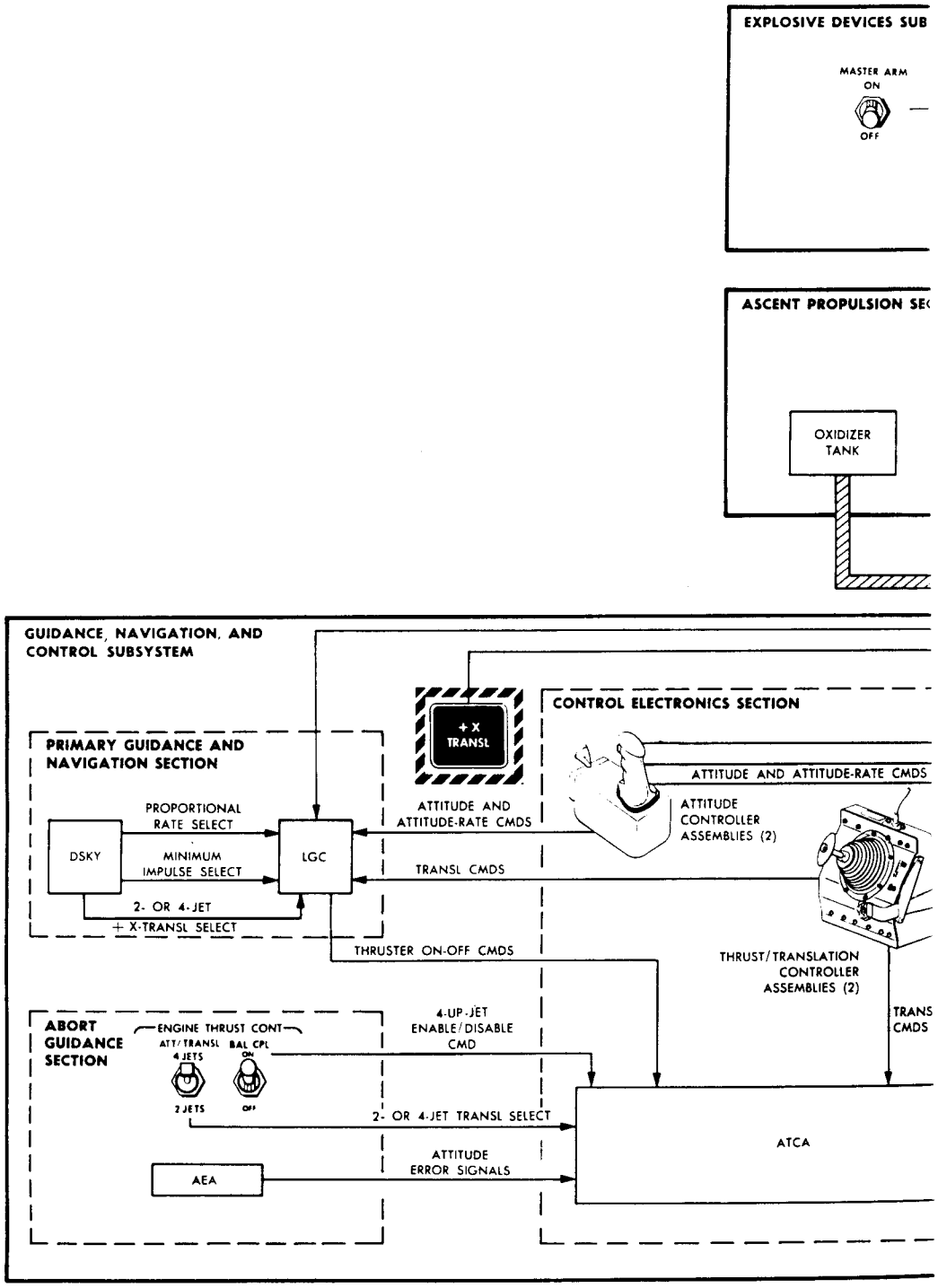
EXPLOSIVE DEVICES SUB
MASTER ARM
ON
OFF
ASCENT PROPULSION SE
OXIDIZER TANK
GUIDANCE, NAVIGATION, AND CONTROL SUBSYSTEM
+X TRANSL
CONTROL ELECTRONICS SECTION
PRIMARY GUIDANCE AND NAVIGATION SECTION
ATTITUDE AND ATTITUDE-RATE CMDS
PROPORTIONAL RATE SELECT
ATTITUDE AND ATTITUDE-RATE CMDS
ATTITUDE CONTROLLER ASSEMBLIES (2)
DSKY
MINIMUM IMPULSE SELECT
LGC
TRANSL CMDS
2- OR 4-JET
+X-TRANSL SELECT
THRUSTER ON-OFF CMDS
THRUST/TRANSLATION CONTROLLER ASSEMBLIES (2)
TRANS CMDS
ABORT GUIDANCE SECTION
ENGINE THRUST CONT
ATT/TRANSL
BAL CPL
4 JETS
ON
2 JETS
OFF
4-UP-JET ENABLE/DISABLE CMD
2- OR 4-JET TRANSL SELECT
ATCA
ATTITUDE ERROR SIGNALS
AEA

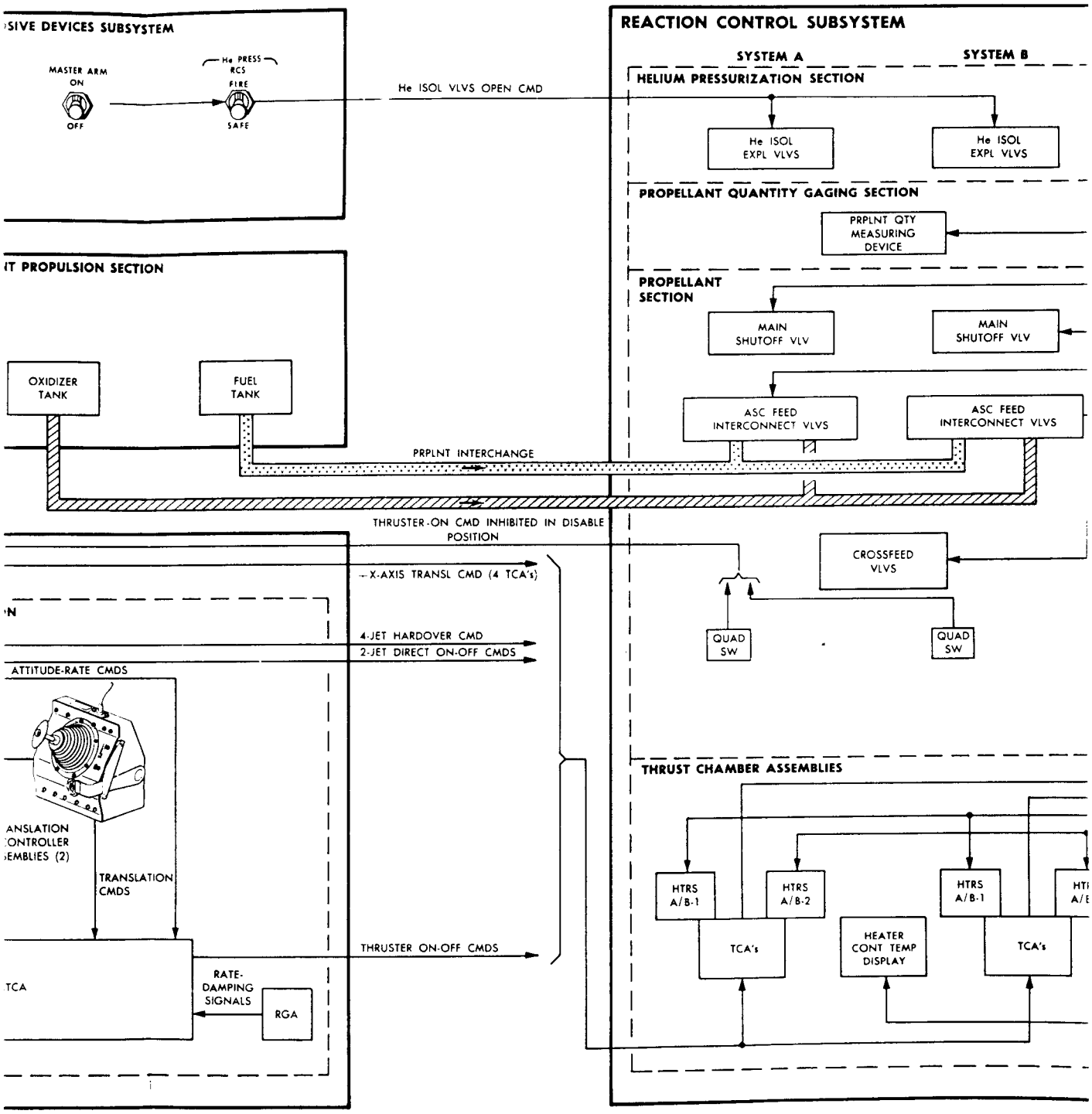
SIVE DEVICES SUBSYSTEM
MASTER ARM
ON
OFF
He PRESS
RCS
FIRE
SAFE
He ISOL VLVS OPEN CMD
REACTION CONTROL SUBSYSTEM
SYSTEM A
SYSTEM B
HELIUM PRESSURIZATION SECTION
He ISOL EXPL VLVS
He ISOL EXPL VLVS
PROPELLANT QUANTITY GAGING SECTION
PRPLNT QTY MEASURING DEVICE
T PROPULSION SECTION
PROPELLANT SECTION
MAIN SHUTOFF VLV
MAIN SHUTOFF VLV
OXIDIZER TANK
FUEL TANK
ASC FEED INTERCONNECT VLVS
ASC FEED INTERCONNECT VLVS
PRPLNT INTERCHANGE
THRUSTER-ON CMD INHIBITED IN DISABLE POSITION
CROSSFEED VLVS
X-AXIS TRANSL CMD (4 TCA's)
QUAD SW
QUAD SW
4-JET HARDOVER CMD
2-JET DIRECT ON-OFF CMDS
ATTITUDE-RATE CMDS
ANSLATION CONTROLLER EMBLIES (2)
TRANSLATION CMDS
THRUST CHAMBER ASSEMBLIES
HTRS A/B-1
HTRS A/B-2
HTRS A/B-1
TCA's
HEATER CONT TEMP DISPLAY
TCA's
THRUSTER ON-OFF CMDS
TCA
RATE-DAMPING SIGNALS
RGA

Mis

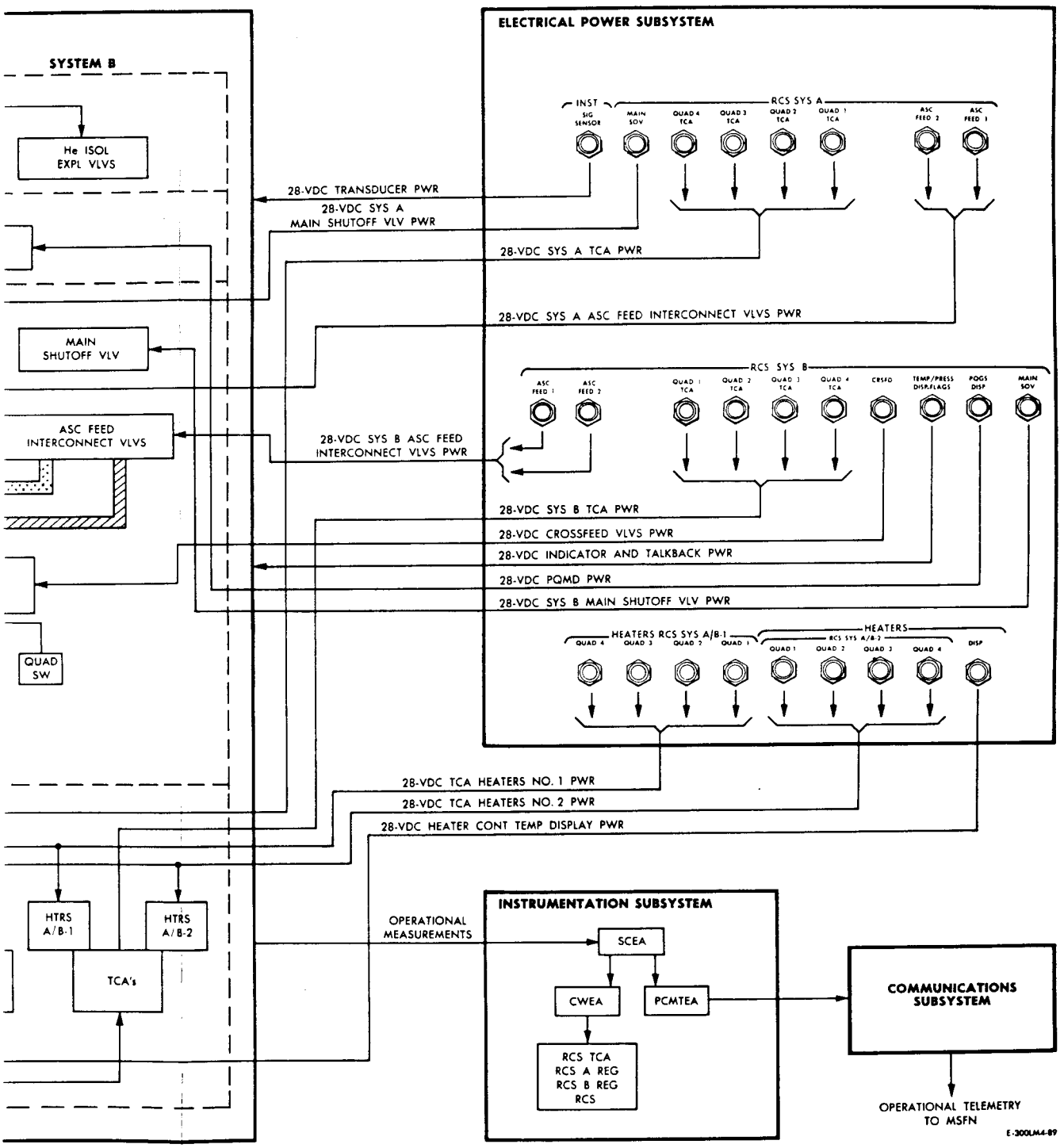

Figure 2.4-2. Reaction Control Subsystem - Interface Diagram

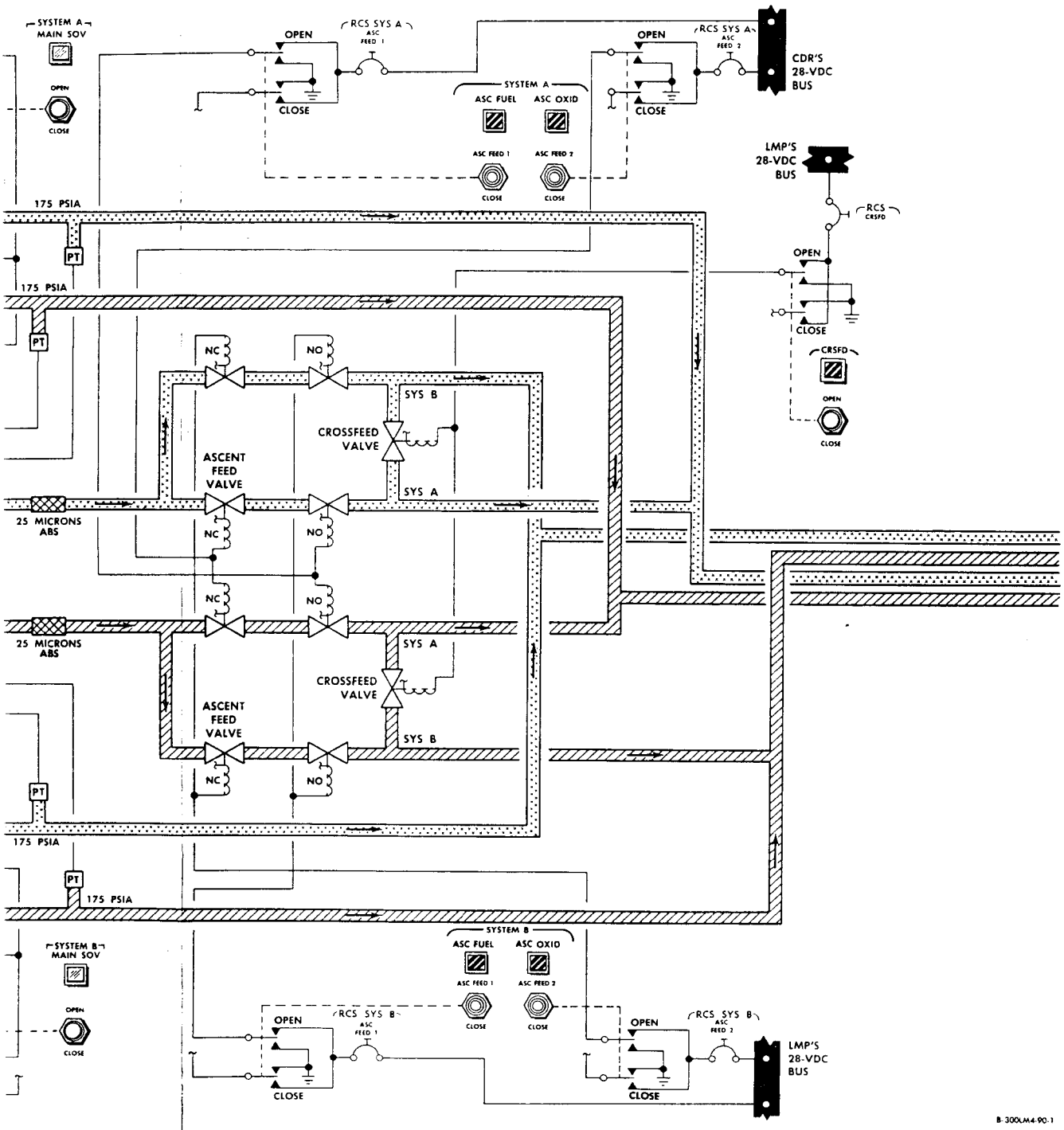

Figure 2.4-3. Reaction Control Subsystem - Simplified Functional Flow Diagram (Sheet 1 of 2)

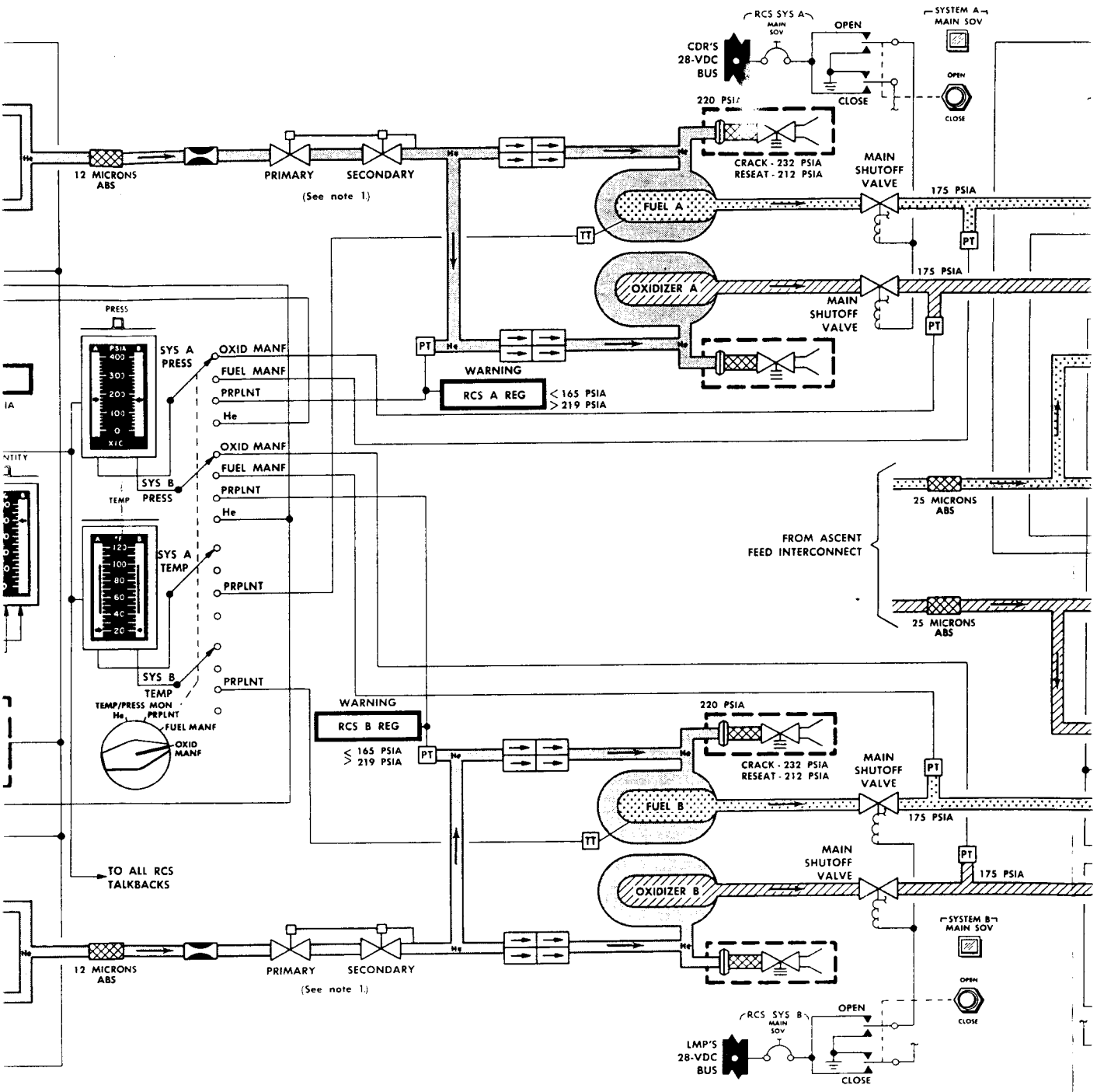
RCS SYS A
MAIN SOV
OPEN
CLOSE
SYSTEM A
MAIN SOV
CDR'S
28-VDC
BUS
220 PSIA
CRACK - 232 PSIA
RESEAT - 212 PSIA
MAIN
SHUTOFF
VALVE
175 PSIA
12 MICRONS
ABS
PRIMARY
SECONDARY
(See note 1.)
He
FUEL A
OXIDIZER A
TT
PT
PRESS
SYS A
PRESS
OXID MANF
FUEL MANF
PRPLNT
He
WARNING
RCS A REG
< 165 PSIA
> 219 PSIA
SYS B
PRESS
TEMP
SYS A
TEMP
SYS B
TEMP
TEMP/PRESS MON
FUEL MANF
OXID MANF
25 MICRONS
ABS
FROM ASCENT
FEED INTERCONNECT
RCS B REG
≤ 165 PSIA
≥ 219 PSIA
FUEL B
OXIDIZER B
TO ALL RCS
TALKBACKS
SYSTEM B
MAIN SOV
RCS SYS B
LMP'S
28-VDC
BUS

Missi

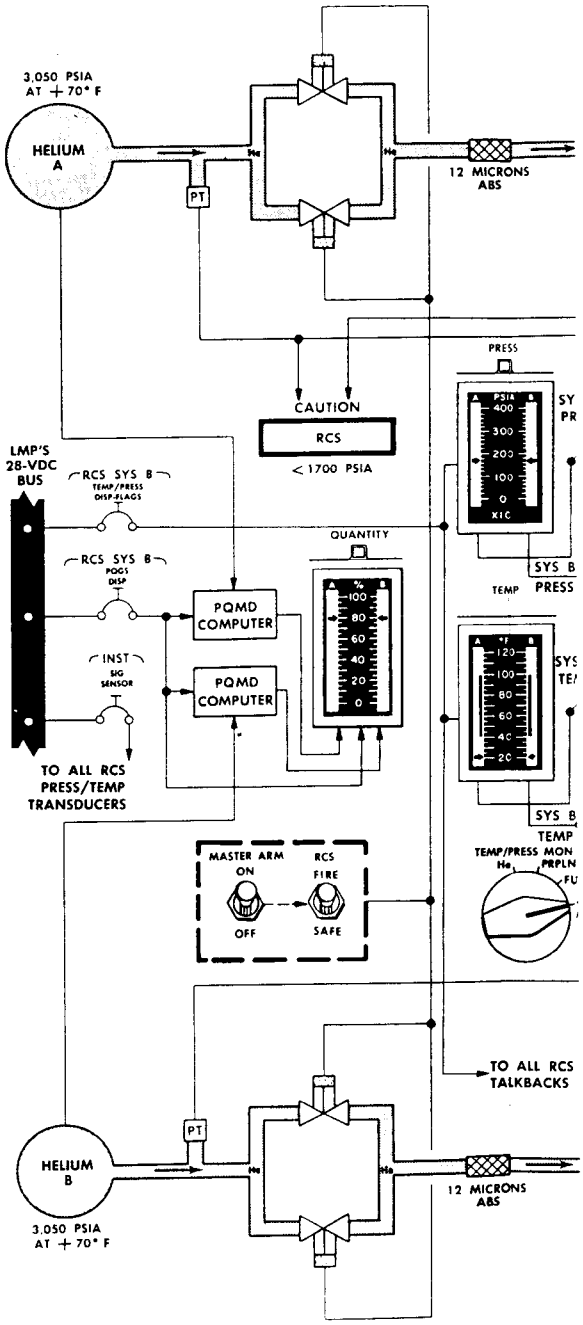
3,050 PSIA
AT + 70° F
HELIUM
A
PT
He
12 MICRONS
ABS
CAUTION
RCS
< 1700 PSIA
PRESS
PSIA
400
300
200
100
0
X1C
LMP'S
28-VDC
BUS
RCS SYS B
TEMP/PRESS
DISP-FLAGS
RCS SYS B
POGS
DISP
INST
SIG
SENSOR
PQMD
COMPUTER
PQMD
COMPUTER
QUANTITY
%
100
80
60
40
20
0
TO ALL RCS
PRESS/TEMP
TRANSDUCERS
SYS B
PRESS
TEMP
°F
120
100
80
60
40
20
SYS B
TEMP
TEMP/PRESS MON
He
PRPLN
MASTER ARM
ON
OFF
RCS
FIRE
SAFE
TO ALL RCS
TALKBACKS
HELIUM
B
3,050 PSIA
AT + 70° F
PT
He
12 MICRONS
ABS

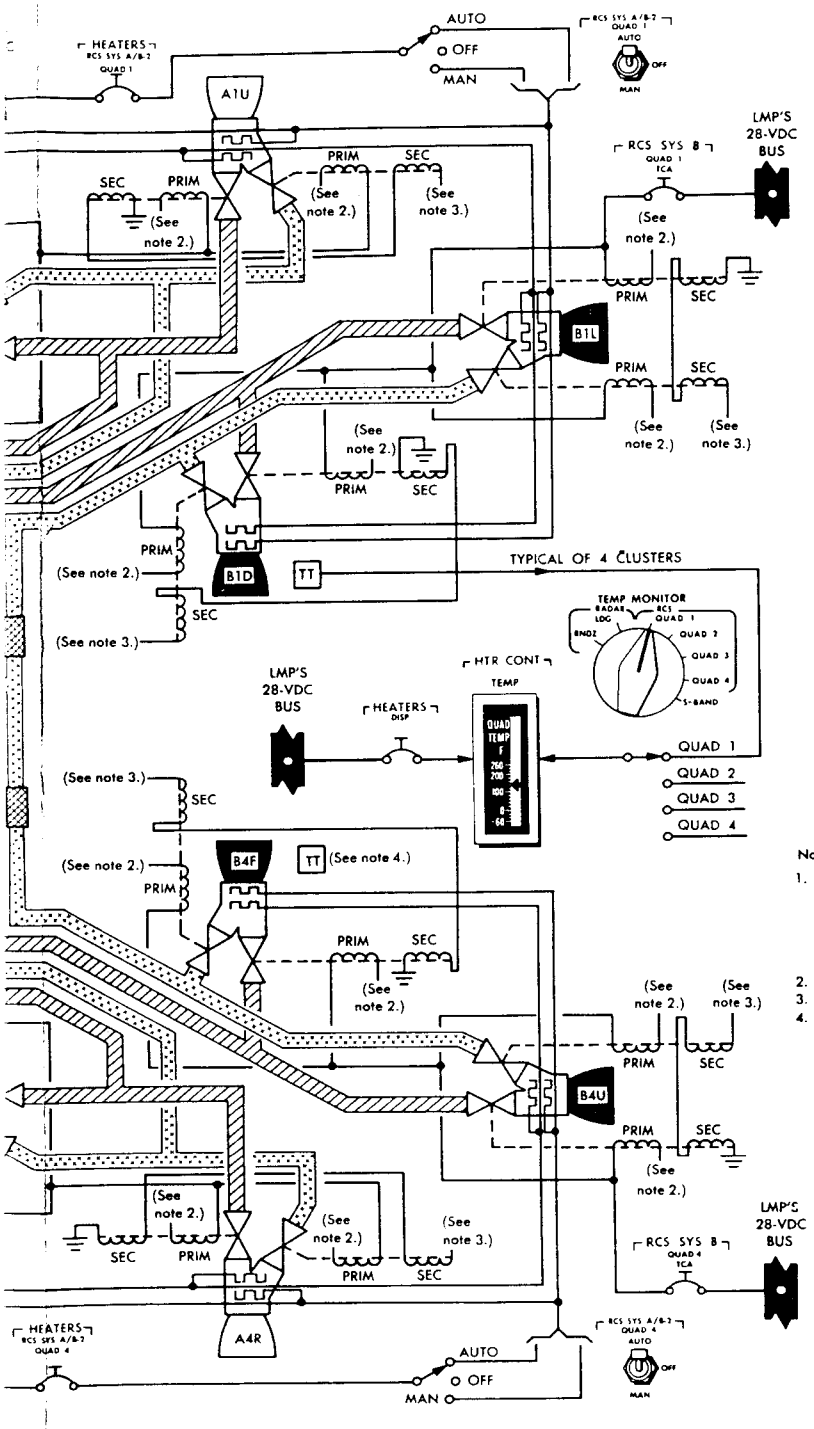

WARNING

RCS TCA

TCA-on command without chamber pressure. Opposing TCA's fire simultaneously. See figure 2.4-7.

Notes:

1. Primary pressure regulator outlet pressure is 181 ± 3 psia; lockup pressure is 188 psia. Secondary pressure regulator outlet pressure is 185 ± 3 psia; lockup pressure is 192 psia.
2. From ATCA.
3. Manual commands.
4. To TEMP MONITOR switch.

LEGEND

Signal flow

Fuel

Oxidizer

Helium

300LM4-90-3

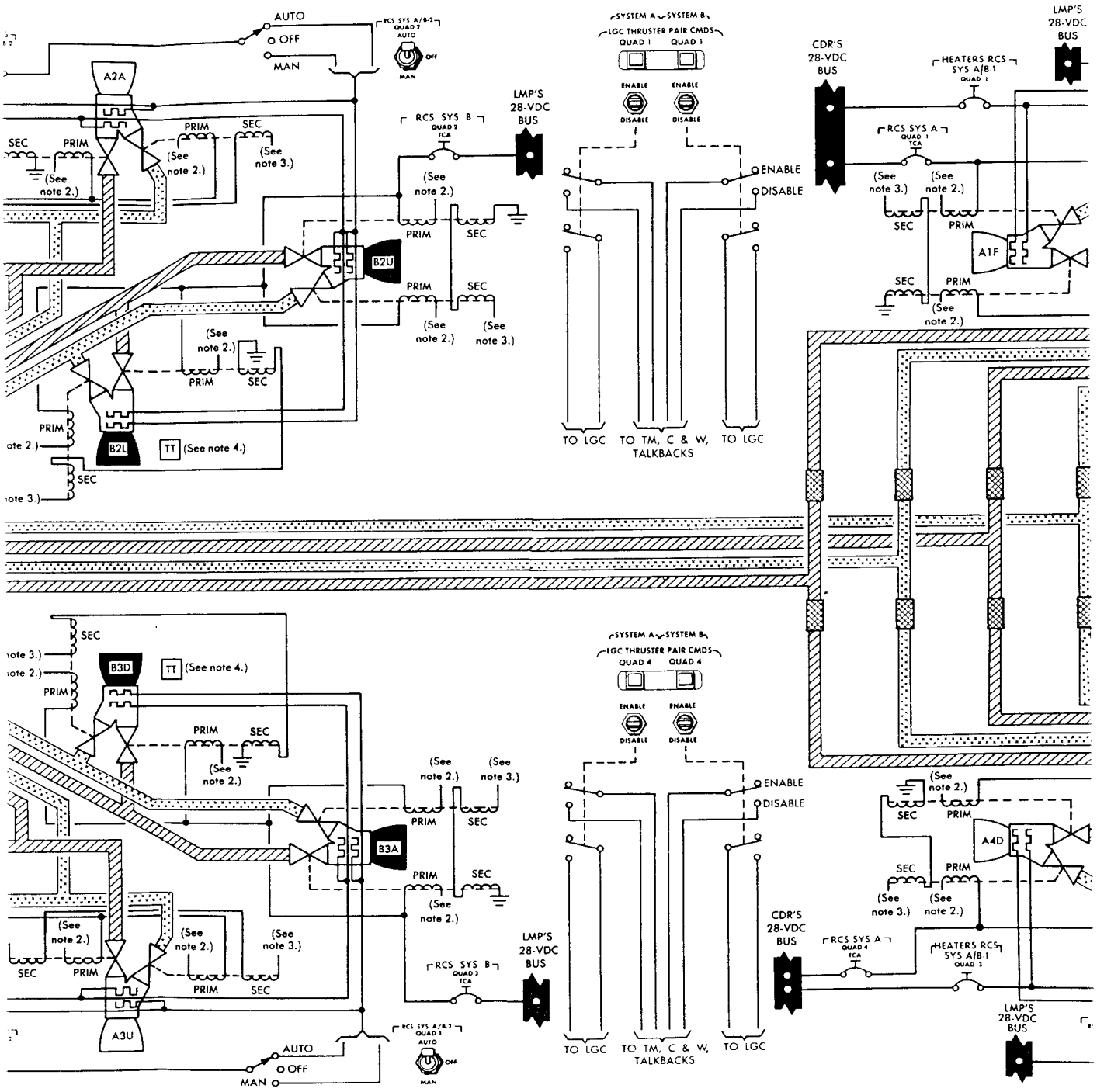

(Sheet 2 of 2)

Date 1 April 1971

[redacted]

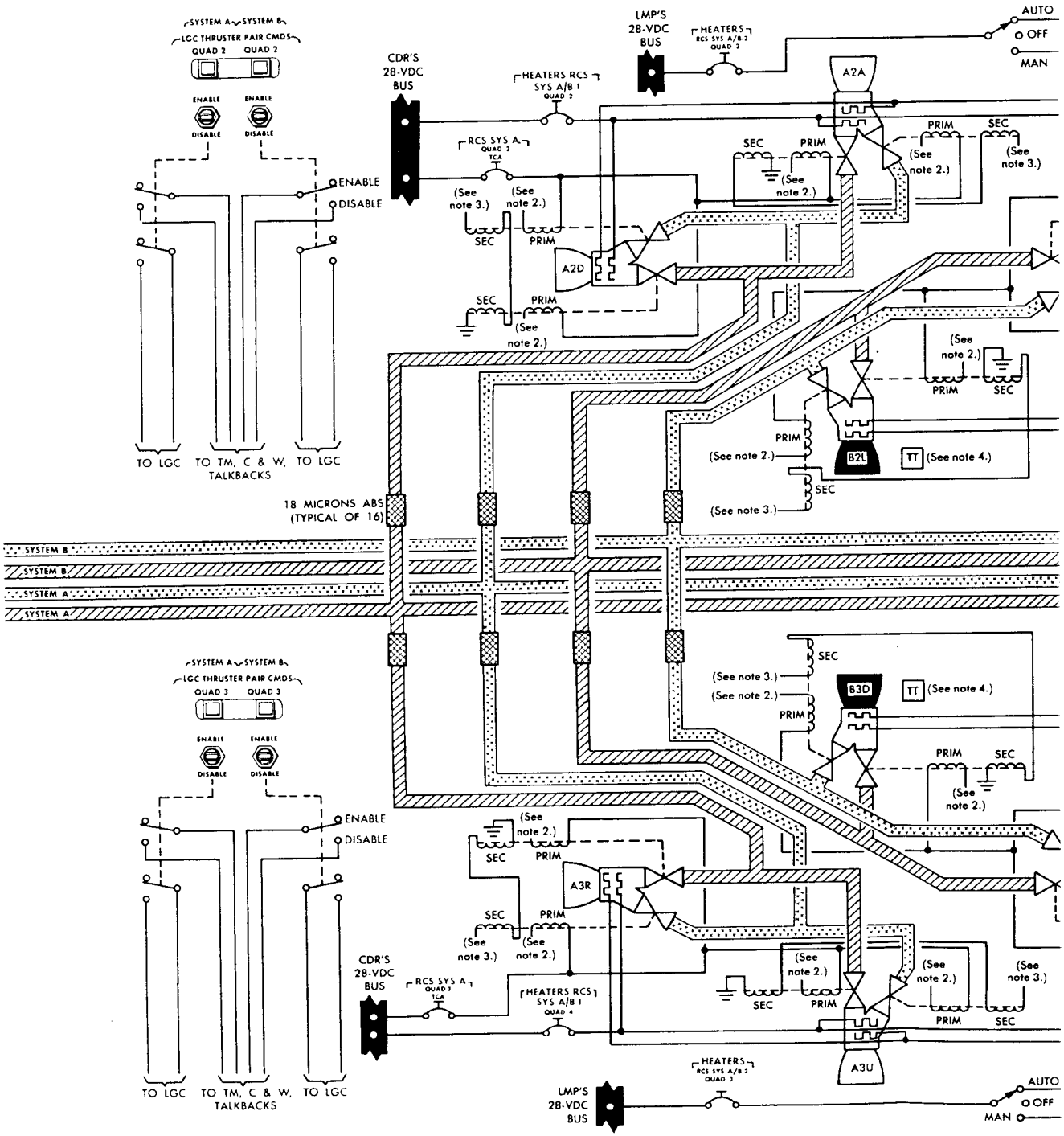

Figure 2.4-3. Reaction Control Subsystem - Simplified Functional Flow Diagram (Sheet 2 of 2)

firing the explosive helium isolation valve exceeds 100%, so that after the valve is opened and the helium in the helium tank becomes less dense, the indicated quantity is 100%. During periods of intensive TCA firing, when the RCS propellants are consumed at a very high rate, the QUANTITY indicator displays a minus error of 5% to 10% for several minutes.

The input device of the PQMD is a Wheatstone bridge that senses pressure/temperature (P/T) ratio. The bridge is energized by a bridge amplifier in the analog computer. The analog computer contains a power supply, three amplifiers, and three internal system-calibrating adjustments. The output voltage of the P/T sensor is applied to the preamplifier. The amplified signal is fed to the output amplifier, which sums this signal with an input reference voltage and provides an analog output (0 to 5 volts) to the QUANTITY indicator. The power supply receives an input voltage from the RCS SYS B: PQGS DISP circuit breaker (panel 16).

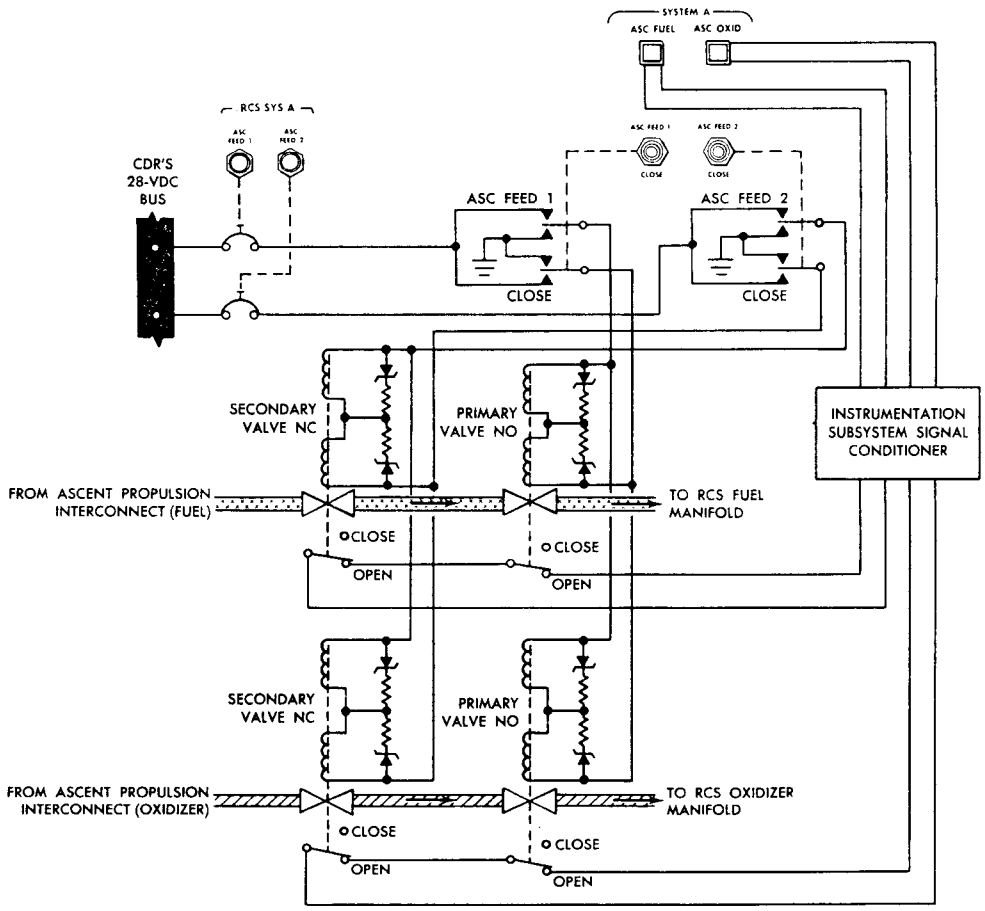

Figure 2.4-4. RCS System A - Ascent Feed Interconnect Valve Arrangement
(Shown with Secondary Valves in Open Position)

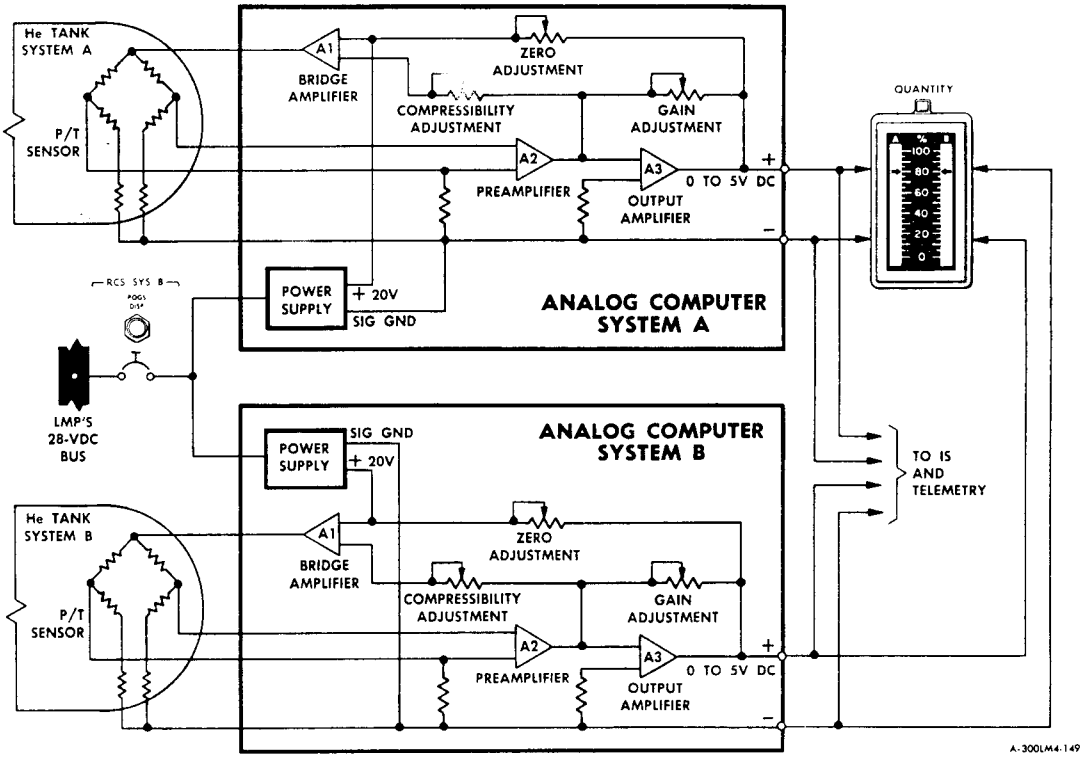

Figure 2.4-5. Propellant Quantity Measuring Device

2.4.3.4 Thrust Chamber Assemblies. (See figure 2.4-6.)

The TCA clusters are enclosed in thermal shields, with the TCA combustion chamber outboard of the second rib and the nozzle protruding from the shield. The thermal shields aid in maintaining a temperature-controlled environment for the propellant lines from the ascent stage to the TCA's, minimize heat loss, and reflect radiated engine heat and solar heat.

Each TCA contains an oxidizer solenoid valve and a fuel solenoid valve, which, when open, pass propellant through an injector into the combustion chamber, where ignition occurs. Each solenoid valve contains a primary (automatic) coil and a secondary (direct) coil, either of which, when energized, opens the valve. Primary power (28 volts) is applied to the TCA primary coils via the RCS SYS A and RCS SYS B: QUAD TCA circuit breakers (panels 11 and 16, respectively). (See figure 2.4-7.) Each circuit breaker controls power to the primary coils of two TCA's in each quad. In the automatic mode, the on and off commands are applied to the primary coils of the TCA's. When a manual override command (such as attitude hardover or +X-translation) is issued, the command is applied directly to the secondary coils of the TCA's.

For attitude control, the duration of TCA firing ranges from a pulse to steady-state operation. The pulse mode is used for small attitude changes in the selected axis. In this mode, TCA operation lasts for less than 1 second: the minimum pulse for TCA firing (at 21 volts) is 13 milliseconds. In the steady-state mode, operation lasts for 1 second or longer. For a short-duration pulse (figure 2.4-8), engine thrust is just beginning to rise when the shutdown command is given, and only a very small amount of propellant is injected into the combustion chamber. Under these conditions of minimum impulse, the full 100 pounds of thrust cannot be achieved and TCA operation is comparatively inefficient.

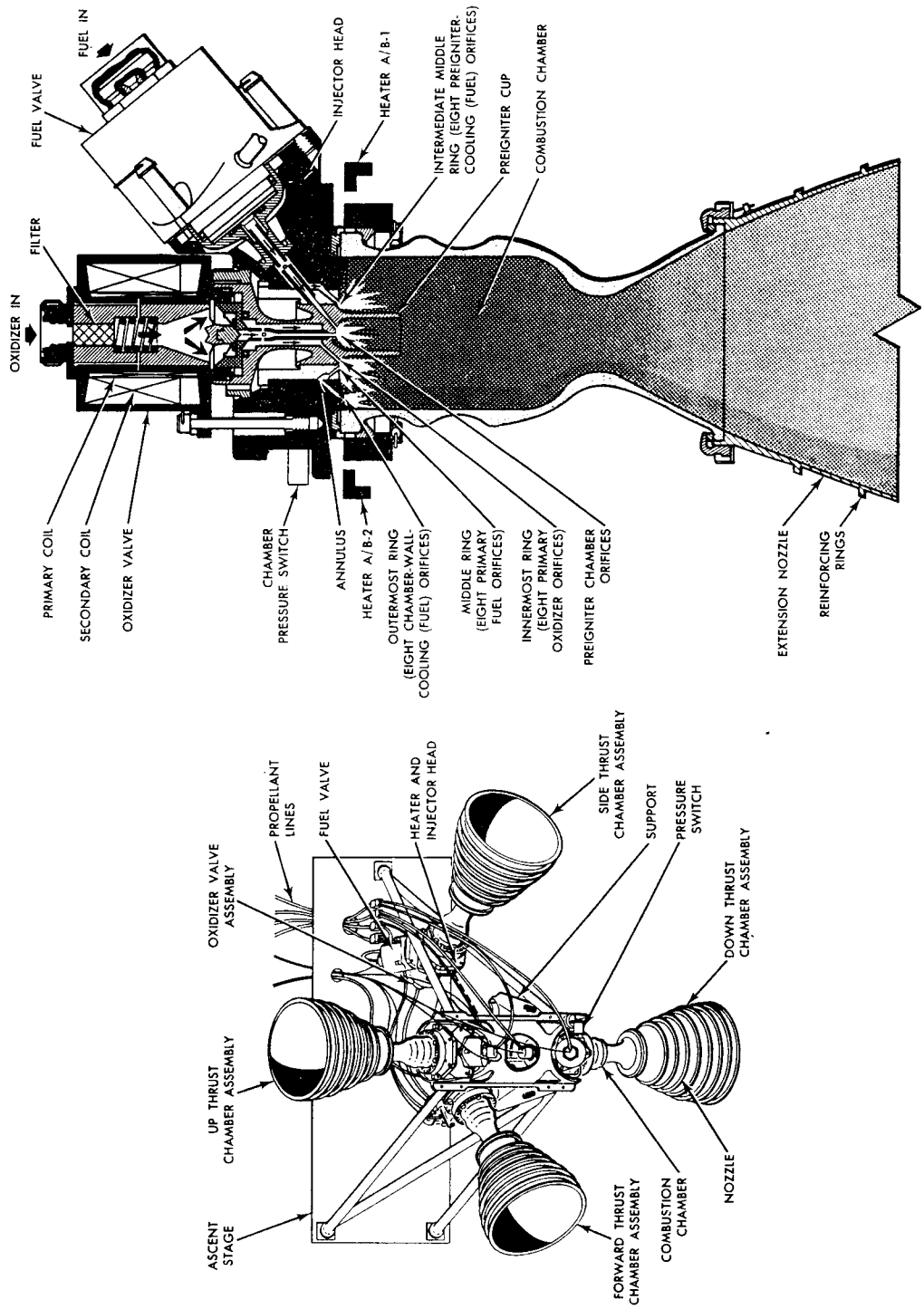

Figure 2.4-6. Thrust Chamber Assembly and Cluster

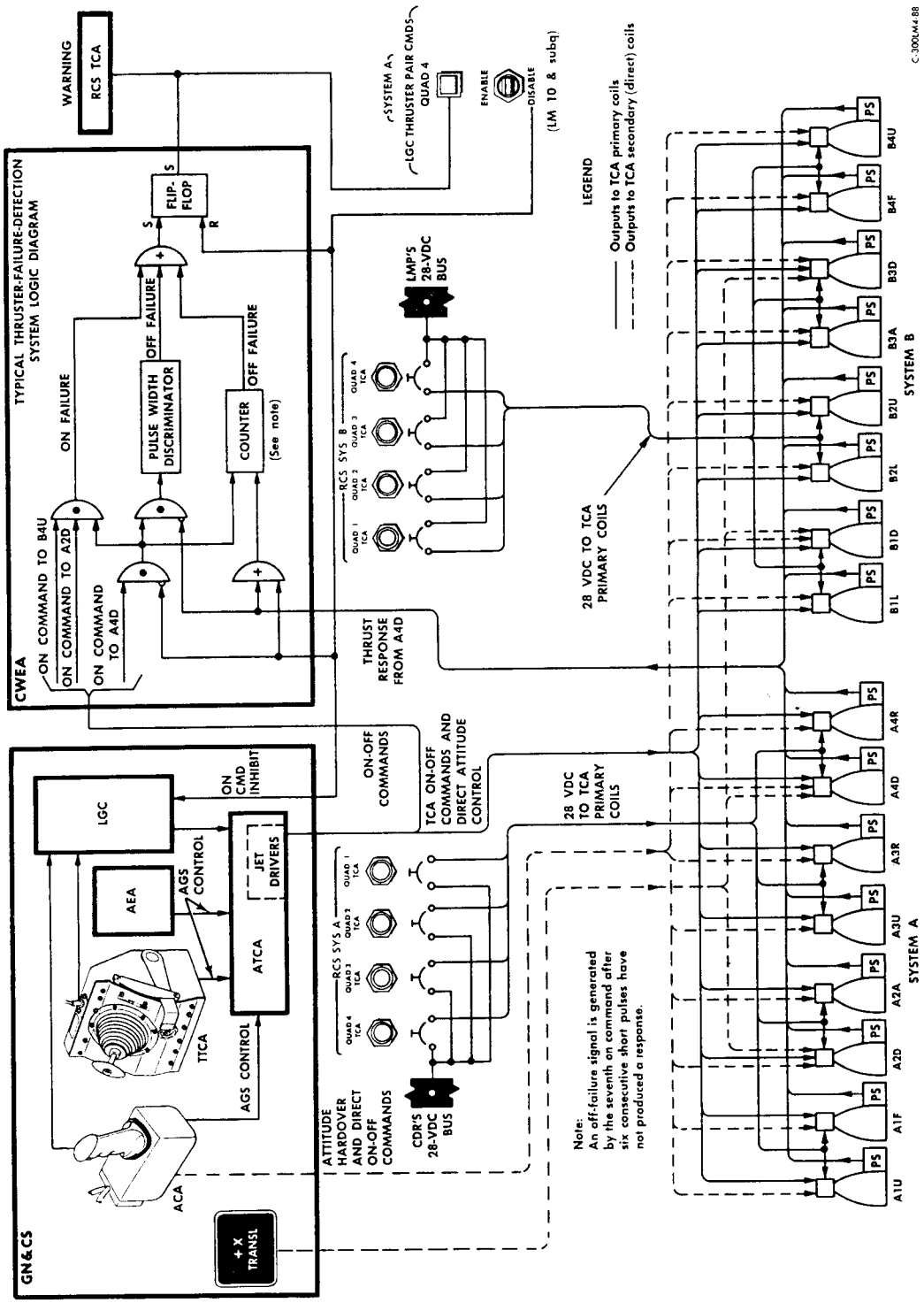

Figure 2.4-7. Thrust Chamber Assembly - Operation and Failure Detection System

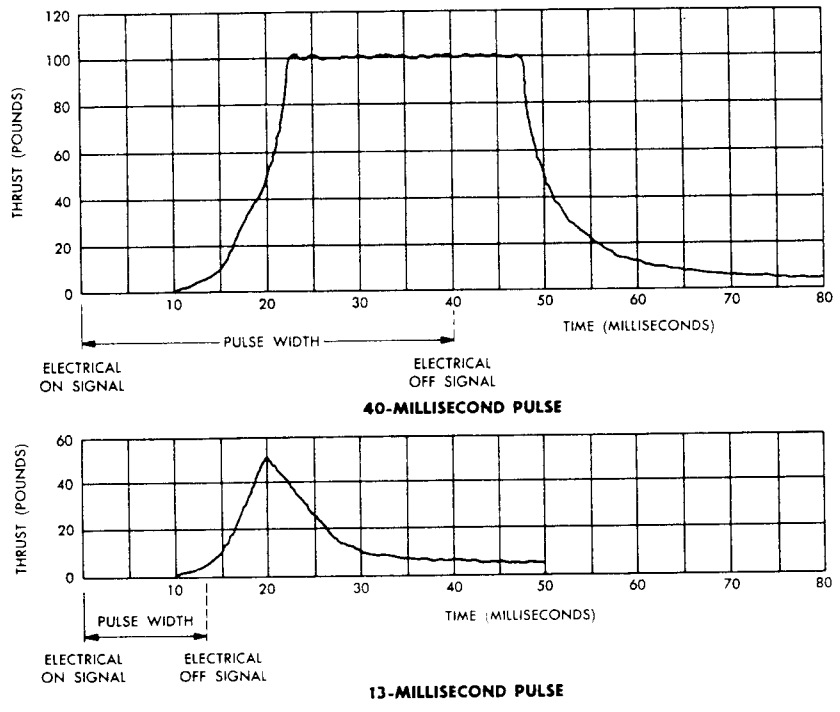

Figure 2.4-8. TCA Firing - Thrust Versus Time

If the pressure regulator in the helium pressurization section fails closed, TCA operation continues briefly, until helium pressure drops below the acceptable limit and propellants are no longer injected into the TCA combustion chamber. If both pressure regulators fail open, the relief valves in the pressurization section vent the helium overboard; however, TCA operation continues until near-depletion of the helium. In either type of pressurization failure, use of the eight TCA's of the affected system is lost until the main shutoff valves are closed and the crossfeed valves are opened to allow the operative system to supply propellants to the TCA's of the malfunctioning system.

Initial combustion occurs in a preigniter cup which raises the main combustion chamber pressure for satisfactory TCA ignition. Fuel and oxidizer pass through preigniter tubes to their respective preigniter injection orifices. The fuel is sprayed into the preigniter cup; the oxidizer is ejected and impinges with the fuel, causing spontaneous ignition and establishing combustion in the preigniter cup. The main fuel flow is routed through four equally spaced holes in the side of the preigniter tube, to a chamber that channels the fuel to an annulus. The annulus routes fuel to three concentric fuel rings. Fuel is sprayed from eight orifices in the outermost ring onto the combustion chamber wall, where it forms a boundary layer for cooling. The intermediate middle ring has eight orifices that spray fuel onto the outer wall of the preigniter cup. This fuel cools the preigniter cup before it vaporizes. Eight primary fuel orifices of the middle ring eject fuel to mix with the oxidizer. The main oxidizer flow is routed through four equally spaced holes in the side of the oxidizer preigniter tube, to a chamber that supplies the eight primary oxidizer orifices of the innermost ring. The eight primary oxidizer orifices and eight primary fuel orifices are arranged in doublets, at angles to each other, so that the emerging propellant streams impinge. Due to the hydraulic delay built into the injector, ignition at these eight doublets occurs approximately 4 milliseconds later than ignition inside the preigniter cup.

When the thruster-off command is given, the primary or secondary coils become deenergized, releasing the armature poppets. Spring and propellant pressure return the armature poppet of each valve to its seat, shutting off propellant flow into the injector. Propellant trapped in the injector is ejected and burned for a short time, while thrust decays to zero pounds.

2.4.3.4.1 Thrust Chamber Assembly Failure-Detection System. (See figure 2.4-7.)

The failure-detection system can detect thruster-on or thruster-off failures when the RCS is under PGNS or AGS control. A thruster-on or a thruster-off failure produces the same indication in that it causes the RCS TCA warning light (panel 1) to go on and the QUAD talkback associated with the failed TCA to provide a red display. Setting the QUAD switch to (DISABLE) isolates the malfunctioning TCA from primary coil commands, causing the QUAD talkback to change to a barber-pole display and the RCS TCA warning light to go off. A microswitch in the QUAD switch applies an inhibit signal to the LGC to prevent the valves of the malfunctioning TCA from being cycled.

Thruster-On Failures. A thruster-on failure is defined as a TCA thrusting condition without an on command from the GN&CS. If a thruster-on failure occurs, opposing TCA's fire when it becomes necessary to nullify the effect of the failed-on TCA. For example, if TCA A4D fails on, TCA's A2D and B4U receive on commands. A tabulation of opposing TCA's is given in figure 2.4-9.

All thruster-on commands are routed through the CWEA which detects the presence of opposing command signals. The commands, from the jet drivers, to turn on particular TCA's are routed to the thruster failure-detection system, where they are applied simultaneously to two AND gates in each failure-detection circuit. When a thruster-on command (command A4D, figure 2.4-7) and the opposing thruster-on commands (commands B4U and A2D) are applied simultaneously to the AND gates, the result is an on-failure signal that is applied to the flip-flop via the OR gate. Setting the flip-flop causes the RCS TCA warning light to go on and the respective QUAD talkback to provide a red (TCA failure) display. Setting the related QUAD switch (SYSTEM A: QUAD 4) to (DISABLE) applies a reset signal to the flip-flop and counter, turning off the RCS TCA warning light.

Thruster-Off Failures. A thruster-off failure is defined as a nonthrusting condition with an on command from its jet driver. With an on command to TCA A4D (figure 2.4-8), and the absence of a response from the pressure switch in the TCA, an off-failure signal is initiated at the AND gate. The TCA pressure switch closes by the time a maximum pressure of 10.5 psia is sensed in the combustion chamber; it opens by the time pressure has decayed to a minimum of 3 psia. If the jet driver signal from the AND gate lasts longer than 80 milliseconds, it is inverted and applied to the set side of the flip-flop via the OR gate. As a result, the RCS TCA warning light and the respective QUAD talkback provide a failure indication. Under normal operating conditions, the TCA's may not respond to all individual on commands, if these commands (pulses) are of short duration (less than 80 milliseconds). Pulse skipping is not critical until a number of consecutive short pulses are skipped. When six short pulses have not produced a thruster-on response, the seventh consecutive pulse, regardless of duration or whether it produces TCA firing or not, will cause the counter to generate a failure output. The counter output sets the flip-flop via the OR gate, causing the RCS TCA warning light and the respective QUAD talkback to provide a failure indication.

2.4.3.4.2 Heaters.

Thirty-two heaters are used to heat the 16 TCA's; two of the heaters are attached to each TCA flange. The heaters are fed by a 28-volt d-c input; each heater consumes 17.5 watts at 24 volts. One heater of each TCA receives power from the SYS A/B-1 circuit breaker of its respective cluster; the other heater, from the SYS A/B-2 circuit breaker. In effect, two redundant, independently operating heating systems are used to heat each TCA cluster. The heaters normally operate in an automatic mode, in which redundant thermal switches (two connected in parallel for each heater) sense the TCA injector head temperature and turn the heaters on and off, as required, to maintain TCA temperature within the required range. The primary thermal switches are set to maintain TCA temperature at +140°±8° F; the redundant thermal switches are set for +147°±7° F. A 2° deadband permits the temperature to drop 2° below the turn-on temperature.

THRUSTER FAILED ON	ON COMMAND SIGNALS															
	A1U	B1D	A1F	B1L	B2U	A2D	A2A	B2L	A3U	B3D	B3A	A3R	B4U	A4D	B4F	A4R
A1U	●	●							●							
B1D	●	●								●						
A1F			●				●								●	
B1L				●				●								●
B2U					●	●							●			
A2D					●	●								●		
A2A			●				●				●					
B2L				●				●				●				
A3U	●								●	●						
B3D		●							●	●						
B3A							●				●				●	
A3R								●				●				●
B4U					●								●	●		
A4D						●							●	●		
B4F			●								●				●	
A4R				●								●				●

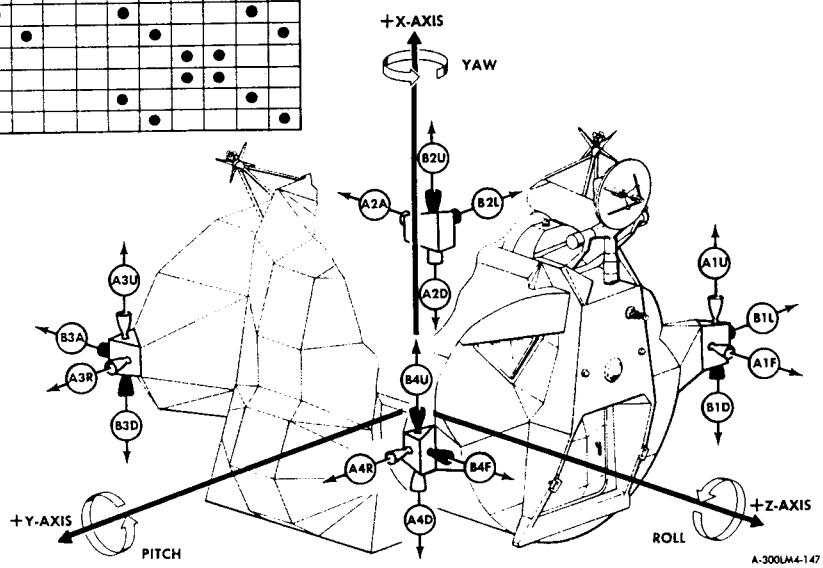

Figure 2.4-9. Reaction Control Subsystem - Thruster-On Failure Correction

The heaters of system A/B-1 are connected directly to their circuit breakers and cycle on and off, as required, unless the appropriate circuit breaker (HEATERS RCS SYS A/B-1: QUAD circuit breakers on panel 11) is opened. The heaters of system A/B-2 are connected to their circuit breakers (HEATERS: RCS SYS A/B-2 QUAD circuit breakers on panel 16) through four three-position switches (one for each cluster). Normally, these switches (RCS SYS A/B-2 QUAD 1 through QUAD 4 on panel 3) are set to AUTO to cycle the heaters on and off to maintain the desired temperature. With the switch set to OFF, the circuit is interrupted and the heaters in the particular cluster are off. With the switch set to MAN, the thermal switches are bypassed and the heaters remain on regardless of the temperature.

The astronauts can determine the temperature of each cluster by using the TEMP MONITOR selector switch and TEMP indicator (panel 3). The inputs to the TEMP indicator originate at four temperature transducers, one for each quad. The heaters of the off-temperature cluster can be disconnected from the electrical power supply by opening the appropriate heater QUAD circuit breaker.

2.4.4 MAJOR COMPONENT/FUNCTIONAL DESCRIPTION.

2.4.4.1 Explosive Valves.

The explosive valves are single-cartridge-actuated, normally closed valves. Setting the MASTER ARM switch (panel 8) to ON and momentarily holding the RCS He PRESS switch to FIRE completes the circuit between the explosive-valve cartridge and the EDS buses. A cartridge is fired by applying power to the initiator bridgewire for a few milliseconds. The resultant heat fires the initiator, generating gases in the valve explosion chamber at an extremely high rate. The gases drive the valve piston into the valve housing to open the valve by shearing a closure disk and aligning the piston port permanently with the pressure line plumbing.

2.4.4.2 Helium Pressure Regulator Assembly. (See figure 2.4-10.)

The helium pressure regulator assembly consists of two individual pressure regulator units connected in series. Both regulator units function in the same manner, however, the downstream regulator is set to produce a higher outlet pressure so that it becomes a secondary unit that will only be in control if the upstream regulator (primary unit) fails open.

Each pressure regulator unit consists of a direct-sensing main stage and a pilot stage. The valve in the main stage is controlled by the valve in the pilot stage, which senses small changes in the outlet pressure (Pr) and converts these changes to proportionally larger changes in control pressure (Pc). The main stage valve poppet is positioned for varying flow demands by changes in control pressure acting on the main stage piston.

During normal RCS operation, the helium flow rate through the regulator assembly is relatively low. Consequently, the main stage valve poppet remains closed. The pilot stage valve poppet is held open by the pilot stage spring, permitting helium to flow into the regulator outlet line through a fixed orifice in the main stage piston. The outlet pressure, sensed by the pilot stage bellows, acts against the force of the pilot stage spring to maintain the regulator output at a constant preset pressure. The flow limiter at the regulator assembly outlet port restricts maximum flow through the regulator assembly so that the propellant tanks are protected if both regulator units fail open. The filter at the regulator assembly inlet prevents particles, which could cause excessive leakage at lockup, from reaching the valve seats.

2.4.4.3 Relief Valve Assemblies. (See figure 2.4-11.)

Each helium pressurization line leading to the propellant tanks has a relief valve assembly that consists of a burst disk, a relief section, and a vent. The burst disk ensures against helium loss while the system is under normal operating pressure; it protects the propellant tanks against overpressurization by rupturing if the pressure reaches approximately 220 psi. During normal operation (burst disk is intact), the vent is open. This creates a vent path that prevents pressure buildup in the relief section in case of a slight burst disk leak. If the leakage pressure builds up to 150 psi, the action of the vent spring is overcome and the vent poppet closes. When line pressure in the system exceeds approximately 220 psi, the pressure forces the belleville spring to snap over, causing the burst disk to hit the punch. This results in a nonfragmentation-type rupture. After the burst disk is ruptured (or after the vent poppet closes), the helium pressure acts against the relief poppet, which cracks at approximately 232 psi. The relief poppet reseats at approximately 212 psi. The vent poppet reopens when the relief section pressure has dropped to approximately 20 psi. The filter upstream of the relief section prevents particles from lodging in the relief poppet seat.

2.4.4.4 Fuel and Oxidizer Tanks. (See figure 2.4-12.)

The propellants are stored in cylindrical titanium-alloy tanks with hemispherical ends. The propellant is in a Teflon bladder, which is chemically inert and resistant to the corrosive action of the propellants. The bladder is supported by a standpipe running lengthwise in the tank. The propellant is fed into the tank from a fill point accessible from the exterior of the LM. A bleed line that extends up through the standpipe draws off gases trapped in the bladder. Helium flows between the bladder and the tank wall and acts upon the bladder to provide positive propellant expulsion.

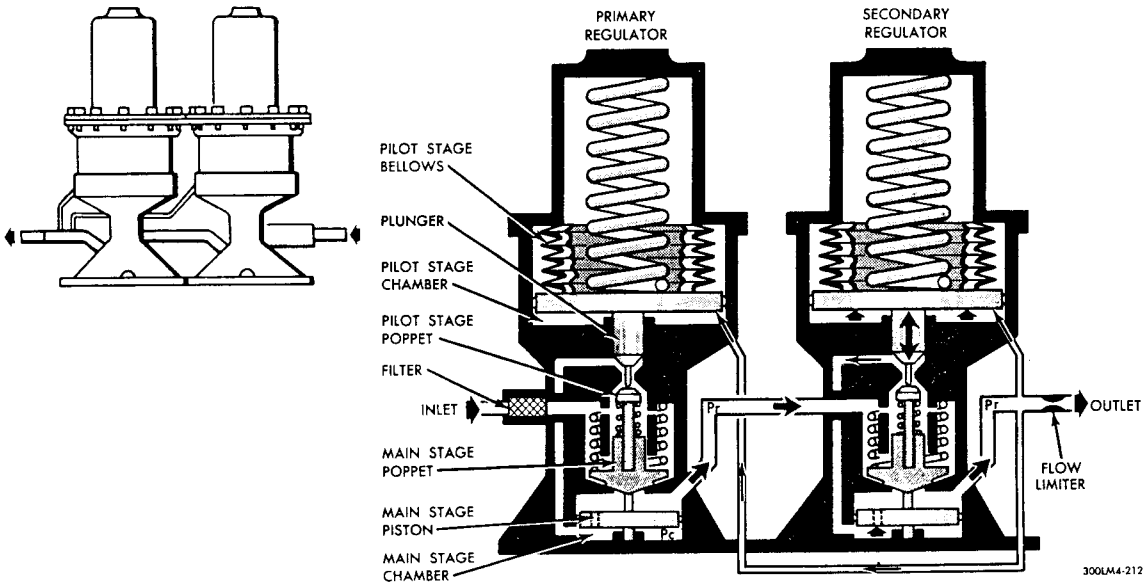

Figure 2.4-10. Helium Pressure Regulator Assembly

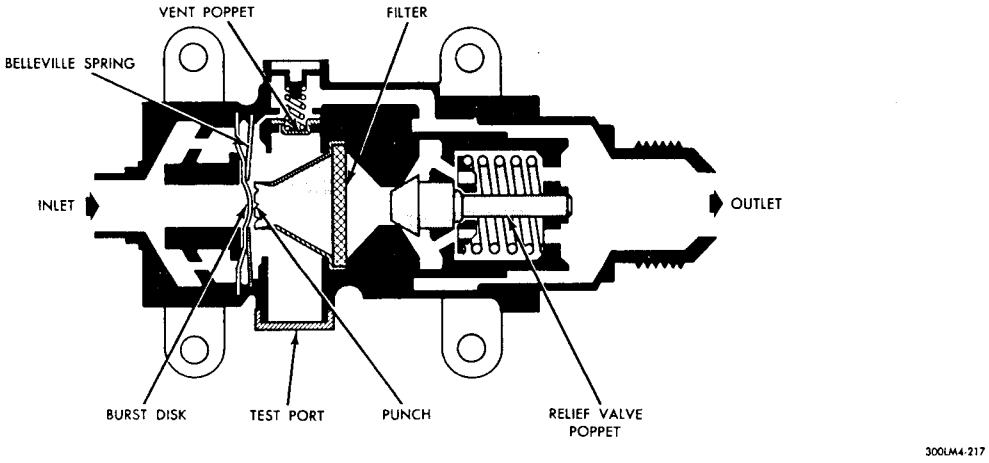

Figure 2.4-11. Relief Valve Assembly

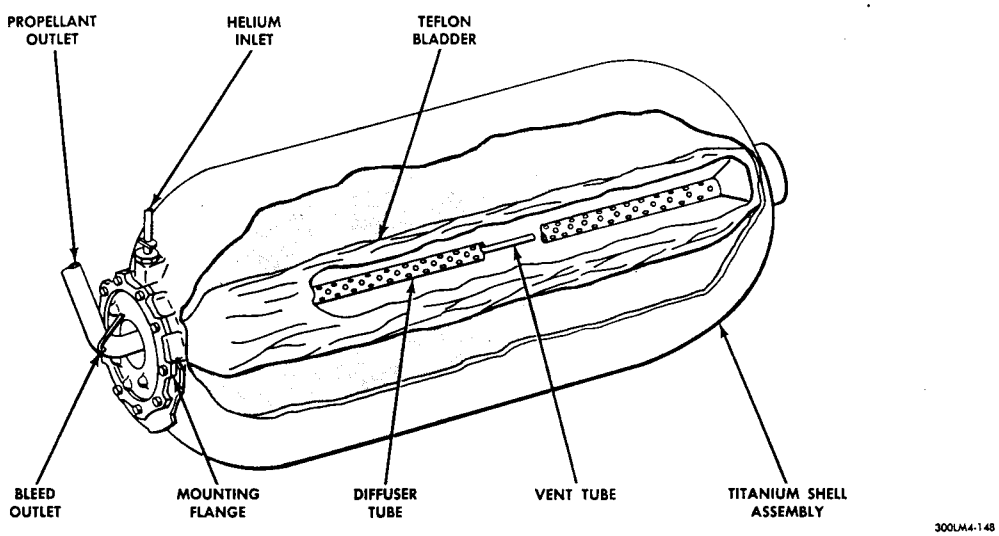

Figure 2.4-12. Propellant Tank Assembly

2.4.4.5 Thrust Chamber Assembly. (See figure 2.4-6.)

2.4.4.5.1 Fuel and Oxidizer Valve Assemblies.

The fuel valve assembly and oxidizer valve assembly are normally closed, two-coil, solenoid valves. Each valve consists of a spool assembly, spring, armature, and seat assembly. A filter at the inlet of each valve provides final filtration of the propellants before they reach the injector. The fuel and oxidizer valve assemblies are identical, except for the seat assemblies and spool assemblies. The exit diameter of the metal seat of the oxidizer valve assembly is larger than that of the fuel valve seat. The fuel valve spool assembly gives a faster armature response than the oxidizer valve spool assembly, resulting in a nominal electrical fuel lead of 2 milliseconds.

The seat assembly retains the spring and armature in the cavity of the spool assembly. The load maintains constant pressure on the armature, forcing the armature's poppet-type head into the angled seat to form an integral seal. A passage in the armature permits propellant to enter the seat-area cavity. The spool assembly consists of a concentric metal body with a three-hole mounting flange; it contains two independent coils (primary and secondary) wound on a magnetic core.

2.4.4.5.2 Injector Head Assembly.

The injector head assembly provides support for the fuel and oxidizer valve assemblies, the mounting flange for the combustion chamber seal and combustion chamber, the fuel passages to the fuel annulus, the pressure pickup tap for measuring combustion chamber pressure, and a propellant impingement arrangement (eight-on-eight doublets with unlike impingement) for mixing propellants. The injector head assembly consists of an injector head housing, injector insulator, injector insert, and preigniter inserts (fuel and oxidizer). The injector insulator provides thermal insulation between the fuel and oxidizer valves and the injector head housing. The injector head assembly has four concentric rings of equally spaced holes on its face, and a preigniter cup.

2.4.4.5.3 Combustion Chamber and Extension Nozzle.

The combustion chamber consists of a coated molybdenum combustor. The extension nozzle is fabricated from L 605 cobalt base alloy; eight stiffening rings are machined around its outer surface. The combustion chamber and extension nozzle are joined together by a large coupling nut and lockring. The combustion chamber is mounted on the injector head assembly, with an attach ring assembly and bolts.

2.4.5 PERFORMANCE AND DESIGN DATA.

The performance and design data for the RCS are given in table 2.4-1. The values listed are nominal unless otherwise specified.

Table 2.4-1. Reaction Control Subsystem - Performance and Design Data

Helium pressurization section	
Helium tank volume (at ambient pressure)	910 cubic inches
Helium tank initial fill pressure and temperature	3,050±50 psia at +70° F
Helium weight (initial fill conditions)	1.03 pounds
Helium tank maximum working pressure	3,500 psia
Helium operating temperature range	+40° to +100° F
Helium tank proof pressure	4,650 psia
Helium tank burst pressure	5,250 psia
Helium filter efficiency	5 microns nominal 12 microns absolute
Primary regulator pressure output	181±3 psia
Primary regulator lockup pressure	188 psia maximum
Secondary regulator pressure output	185±3 psia
Secondary regulator lockup pressure	192 psia maximum
Flow rate through pressure regulator assembly (single TCA operation)	0.036 pound per minute
Quadruple check valve assembly cracking pressure	5 to 7 psid
Quadruple check valve assembly reverse leakage rate	5×10^{-5} scc/sec of helium
Relief valve burst-disk rupture pressure	220 psia
Relief valve venting pressure	232 psia
Relief valve reseat pressure	212 psia minimum
Propellant section	
Oxidizer	Nitrogen tetroxide (N_2O_4)
Oxidizer tank volume (including ullage)	2.38 cubic feet
Oxidizer tank ullage volume	273.0 cubic inches
Oxidizer flow rate to each TCA	0.240 lb/sec
Available oxidizer in each system	194.1 pounds minimum
Oxidizer loaded in each system (tank and manifold)	208.2 pounds

Table 2.4-1. Reaction Control Subsystem - Performance and Design Data (cont)

Propellant section (cont)	
Fuel	50-50 mixture of hydrazine (N_2H_4) and unsymmetrical dimethylhydrazine (UDMH)
Fuel tank volume (including ullage)	1.91 cubic feet
Fuel tank ullage volume	158.5 cubic inches
Fuel flow rate to each TCA	0.117 lb/sec
Available fuel in each system	99.3 pounds minimum
Fuel loaded in each system (tank and manifold)	107.4 pounds
Propellant tank working pressure	176 psia
Propellant tank proof pressure	333 psia
Propellant tank burst pressure	375 psia
Propellant storage temperature range	+40° to +100° F
Propellant pad pressure	50 psia
Propellant temperature	+70° F
Propellant filter efficiency	5 microns nominal 18 microns absolute
Ascent feed filter efficiency	15 microns nominal 25 microns absolute
Main shutoff valves, ascent feed interconnect valves, crossfeed valves:	
ΔP oxidizer flow	2 psi at 0.88 pound per second
ΔP fuel flow	2.5 psi at 0.88 pound per second
Response Time	0.25 second at 250-psi inlet pressure
Thrust chamber assembly	
Engine thrust	100 pounds
Nozzle expansion ratio	40 to 1
Chamber-cooling method	Fuel-film cooling and radiation
Combustion chamber pressure	96 psia
Propellant injection ratio (oxidizer to fuel)	2.05 to 1
Heater operating power and type	28 volts dc; resistance-wire element
Oxidizer inlet pressure (steady state)	170±10 psia
Fuel inlet pressure (steady state)	170±10 psia

Table 2.4-1. Reaction Control Subsystem - Performance and Design Data (cont)

Thrust chamber assembly (cont)	
Approximate weight	5.25 pounds
Overall length	13.5 inches
Nozzle exit diameter	5.75 inches

2.4.6 OPERATIONAL LIMITATIONS AND RESTRICTIONS.

The operational limitations and restrictions for the RCS are as follows:

- The RCS/APS interconnect valves must not be opened until the LM is experiencing a force in the +X-direction (+X-axis acceleration). The interconnect valves must be closed 10 seconds before ascent engine shutdown (except when the downward-firing (+X-axis) TCA's are to be fired beyond APS shutdown, in which case the interconnect valves must be closed 10 seconds before downward-firing TCA shutdown). This ensures that minimum helium enters the RCS from the APS. Failure to meet this requirement may result in erratic thrusting and possible TCA failure.
- Caution should be exercised in operating the TCA's when propellant tank temperature is less than +40° F or exceeds +100° F. TCA performance outside the propellant temperature limits has not been determined.
- If the RCS heaters have been turned off after the TCA's have been fired, the TCA's must be warmed before subsequent firing. A cold TCA cannot be fired safely, and TCA failure may occur if this requirement is not observed.
- Maximum allowable continuous firing time for the downward-firing TCA's (unstaged) is 40 seconds. If this firing time limit is exceeded, damage to the descent stage thermal insulation may result.
- Maximum allowable continuous firing time for the upward-firing (-X-axis) TCA's in clusters No. 1, 3, and 4 is 30 seconds. If this firing time limit is exceeded, damage to the S-band steerable antenna, the VHF antenna, and the RR antenna may result due to overheating.
- The TCA's must not be fired if cluster temperature is less than +120° F. If some heaters fail, a TCA may be as cool as +85° F while the TEMP indicator (panel 3) indicates +120° F for the cluster with the failed heaters. Firing a TCA whose temperature is less than +85° F may result in an explosion.

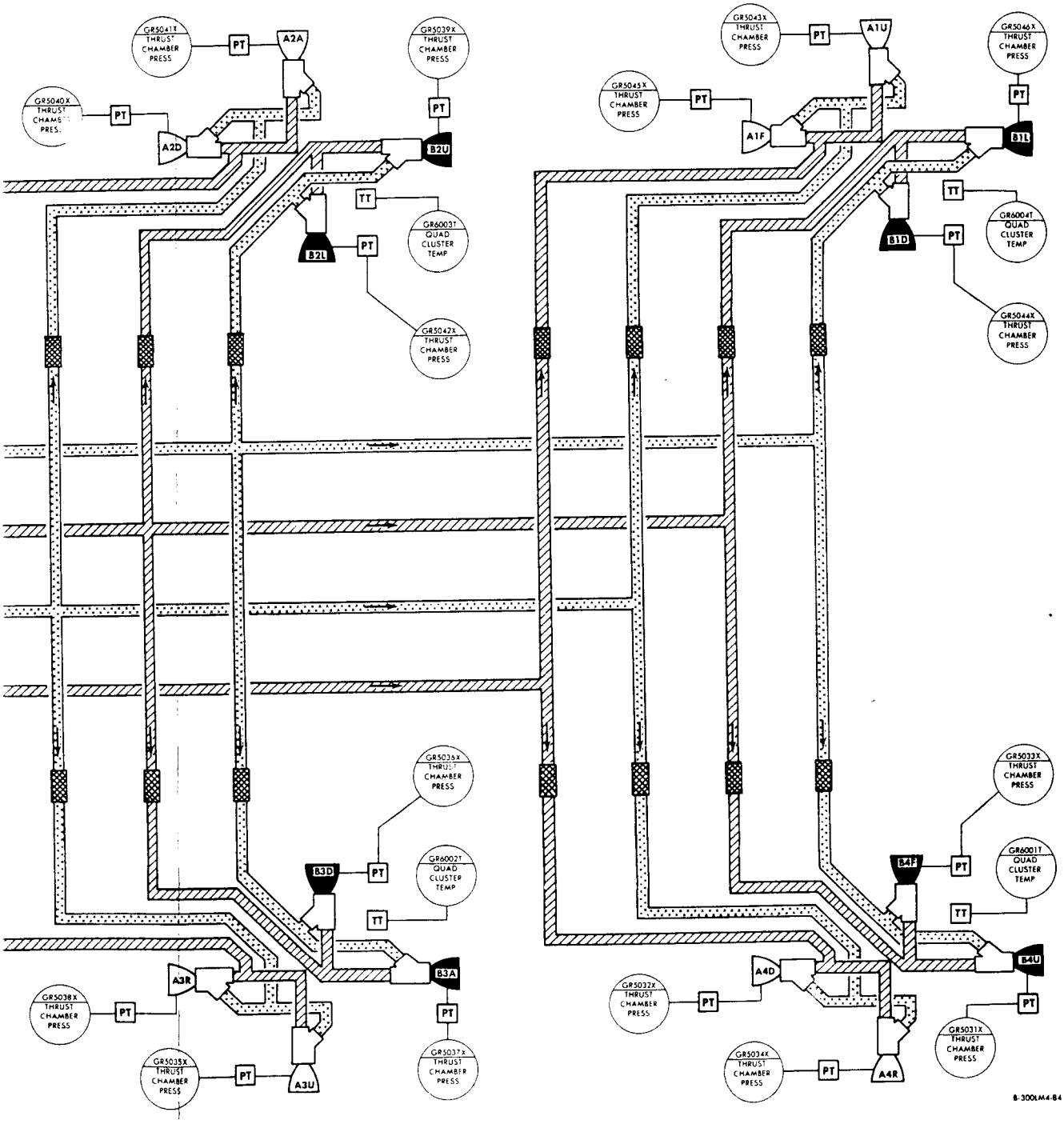

Figure 2.4-13. Reaction Control Subsystem - Telemetry Points

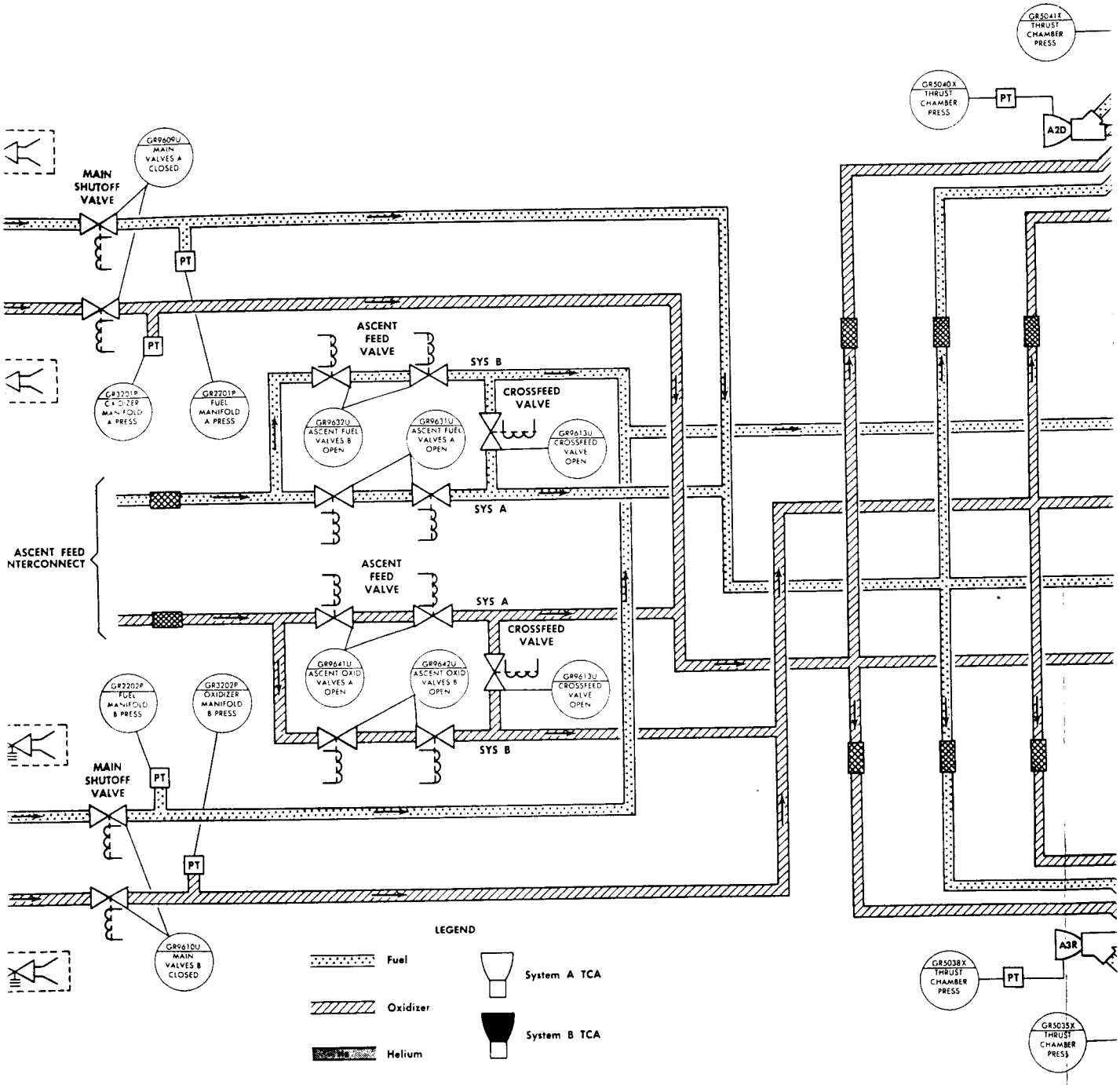
GR5041X THRUST CHAMBER PRESS
GR5040X THRUST CHAMBER PRESS
PT
A2D
GR9609U MAIN VALVES A CLOSED
MAIN SHUTOFF VALVE
PT
PT
ASCENT FEED VALVE
SYS B
CROSSFEED VALVE
GR3201P OXIDIZER MANIFOLD A PRESS
GR2201P FUEL MANIFOLD A PRESS
GR9632U ASCENT FUEL VALVES B OPEN
GR9631U ASCENT FUEL VALVES A OPEN
GR9613U CROSSFEED VALVE OPEN
SYS A
ASCENT FEED INTERCONNECT
ASCENT FEED VALVE
SYS A
CROSSFEED VALVE
GR9641U ASCENT OXID VALVES A OPEN
GR9642U ASCENT OXID VALVES B OPEN
GR9613U CROSSFEED VALVE OPEN
GR2202P FUEL MANIFOLD B PRESS
GR3202P OXIDIZER MANIFOLD B PRESS
SYS B
MAIN SHUTOFF VALVE
PT
PT
GR9610U MAIN VALVES B CLOSED
LEGEND
Fuel
Oxidizer
Helium
System A TCA
System B TCA
A3R
GR5038X THRUST CHAMBER PRESS
PT
GR5035X THRUST CHAMBER PRESS

Mission_

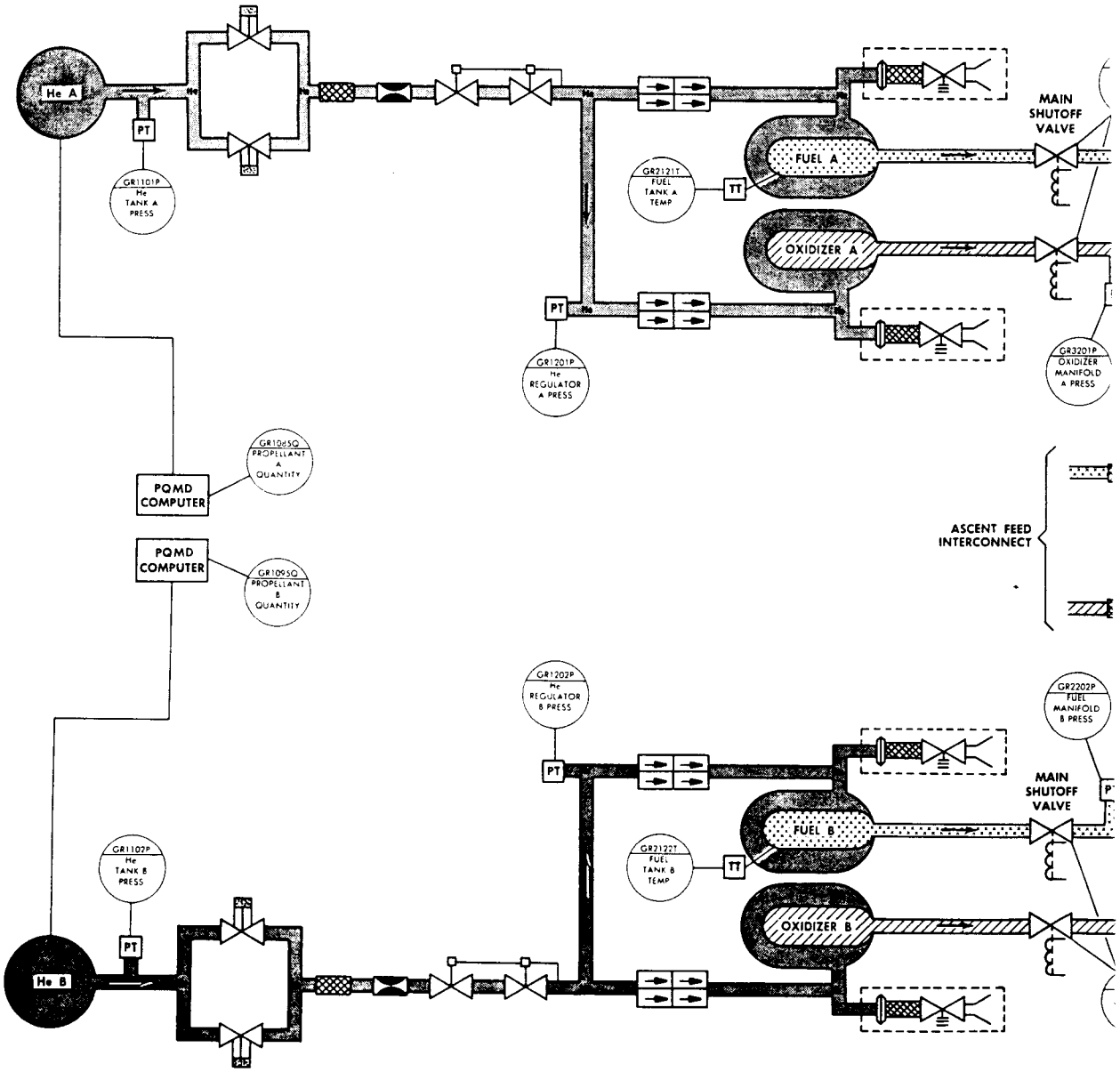
He A
PT
GR1101P
He
TANK A
PRESS
GR2121T
FUEL
TANK A
TEMP
TT
FUEL A
OXIDIZER A
MAIN
SHUTOFF
VALVE
PT
GR1201P
He
REGULATOR
A PRESS
GR3201P
OXIDIZER
MANIFOLD
A PRESS
GR1065Q
PROPELLANT
A
QUANTITY
PQMD
COMPUTER
PQMD
COMPUTER
GR1095Q
PROPELLANT
B
QUANTITY
ASCENT FEED
INTERCONNECT
GR1202P
He
REGULATOR
B PRESS
PT
GR2202P
FUEL
MANIFOLD
B PRESS
MAIN
SHUTOFF
VALVE
FUEL B
GR2122T
FUEL
TANK B
TEMP
TT
OXIDIZER B
GR1102P
He
TANK B
PRESS
PT
He B

2.5 ELECTRICAL POWER SUBSYSTEM

2.5.1 INTRODUCTION.

The Electrical Power Subsystem (EPS), principal source of electrical power for the LM, consists of a d-c section and an a-c section. Both sections supply operating power to respective electrical buses, which supply all LM subsystems through circuit breakers.

Electrical power is supplied by five batteries (one, a lunar battery) in the descent stage and two in the ascent stage. Two descent stage batteries (No. 1 and 4) power the LM from T-30 minutes until after transposition and docking, at which time the LM receives electrical power from the CSM. After separation from the CSM, during the powered descent phase of the mission, four descent stage batteries are paralleled with the ascent stage batteries. Paralleling the batteries ensures minimum required voltage for all LM operations. During lunar stay, specific combinations of the five descent stage batteries can be paralleled to provide LM power.

Before lift-off from the lunar surface, ascent stage battery power is introduced, descent power is terminated, and descent feeder lines are deadfaced and severed. Ascent stage battery power is then used until after final docking and astronaut transfer to the CM.

The EPS batteries are controlled and protected by electrical control assemblies, a relay junction box, and a deadface relay box, in conjunction with the control and display panel. A battery control relay assembly adapts the lunar battery to the four descent battery control circuits. Primary a-c power is provided by two inverters, which supply 115± 2.5-volt, 400± 0.4-cps (synced condition), a-c power to LM subsystems. The operating frequency of the inverters is 400± 10 cps, in the nonsynced, free-running condition.

Electrical power is distributed to LM subsystems via the LM Pilot's d-c bus, the Commander's d-c bus, and a-c buses A and B. A complete listing and description of the d-c and a-c circuit breakers is in section 3. Secondary d-c power distribution is provided by two sensor-power fuse assemblies, which supply d-c power to sensors of the Environmental Control Subsystem (ECS), Reaction Control Subsystem (RCS), and Main Propulsion Subsystem (MPS).

Batteries in the Explosive Devices Subsystem (EDS) provide primary power to trigger LM explosive devices. (Refer to subsection 2.8.) Other batteries supply power to operate the portable life support system (PLSS) and scientific equipment. These batteries are in addition to those in the EPS.

2.5.2 SUBSYSTEM INTERFACES.

2.5.2.1 External Power and Signal Interface. (See figure 2.5-1.)

The EPS provides the primary source of electrical power for the LM during the mission and is the distribution point for externally generated power during prelaunch and docked operations. The EPS interfaces with all functional subsystems of the LM. The Commander's and LM Pilot's buses supply 28 volts dc; a-c buses, A and B, supply 115-volt, 400-cps ac. Prelaunch d-c and a-c power is initially supplied to the EPS from external ground power supplies: d-c power to the Commander's and LM Pilot's buses and a-c power to a-c bus A. (The a-c power can be routed through circuit breakers to a-c bus B.) Approximately 7 hours before launch, ground-supplied power is discontinued and d-c power is connected from the launch umbilical tower (LUT) to the LM Pilot's bus via the relay junction box (RJB). The EPS distributes internally generated d-c power from launch until LM-CSM docking, at which time LM power is shut down and the CSM supplies 28 volts dc to the Commander's bus. (The d-c power can be routed through circuit breakers to the LM Pilot's bus.) Ground return is effected via the floating

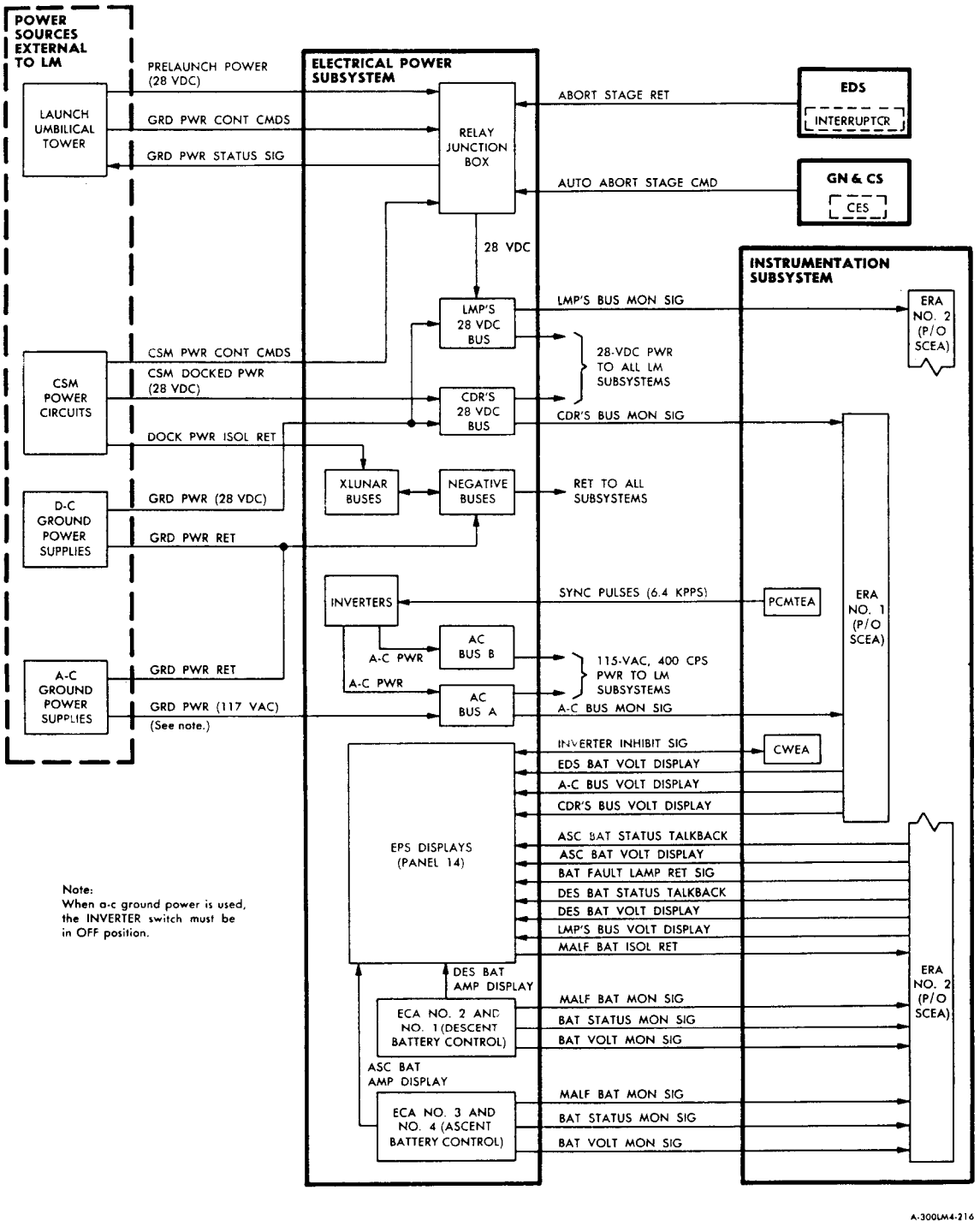

Figure 2.5-1. Electrical Power Subsystem - Signal Interface Block Diagram

translunar bus. (Ground return in the LM is generally accomplished through the metal structure, whereas ground return in the CSM is isolated from the CSM structure.) Before LM-CSM separation, all LM internally supplied electrical power (ac and dc) is restored.

Circuits in electrical control assemblies (ECA's) of the EPS monitor and control LM electrical power. The circuits route discrete output signals if operating limits are exceeded. The output signals are fed to the Instrumentation Subsystem (IS) for conditioning before indicator, talkback, or component caution light display and telemetering. The EPS monitoring signals are representative of malfunctioning batteries, battery currents and terminal voltages, and feed line/battery status. The conditioned analogs of these signals are then routed from electronic replaceable assemblies (ERA's) No. 1 and 2 in the IS to the ELECTRICAL POWER portion of panel 14 for related display. In addition, primary-bus-monitoring signals are connected from the LM Pilot's and Commander's 28-volt buses and a-c bus A to the IS for conditioning and subsequent voltage display on panel 14. Synchronization pulses (6.4 kpps) are supplied from the pulse-code-modulation and timing electronics assembly (PCMTEA) of the IS to the inverters to accurately control a-c output frequency. An inverter inhibit signal path is completed in the caution and warning electronics assembly (CWEA) of the IS when the INVERTER switch (panel 14) is set to OFF.

Pressing the ABORT STAGE pushbutton (panel 1) supplies an automatic abort stage command from the Guidance, Navigation, and Control Subsystem (GN&CS) to the RJB, with a return path via the EDS circuit interrupters. Abort staging initiates a switchover from descent d-c power to ascent d-c power before stage separation.

2.5.2.2 Internal Power Interface. (See figure 2.5-2.)

Battery-generated d-c power is initially supplied to the Commander's and LM Pilot's buses for distribution through circuit breakers. Inverter-generated a-c power is initially supplied to a-c buses A and B for distribution to all subsystems, except the ECS and EDS. The a-c buses supply 115-volt, 400-cps, regulated power through circuit breakers. Figure 2.5-2 shows the circuit breakers associated with specific subsystems, circuit breaker amperage ratings, and reference designations.

2.5.3 FUNCTIONAL DESCRIPTION. (See figures 2.5-3 through 2.5-5.)

2.5.3.1 General.

The basic EPS power distribution is shown in figure 2.5-3. The output of each battery is applied to an ECA. The descent stage ECA's provide an independent control circuit for each descent battery. The ascent stage ECA's provide four independent battery control circuits, two control circuits for each ascent battery. Reverse-current (R/C) and overcurrent (O/C) conditions are monitored by the ECA's. Temperature is monitored within each battery, the overtemperature (O/T) signal is enabled by the ECA's. Each ECA battery control circuit can detect a bus or feeder malfunction and operate a main feeder contactor (MFC) associated with the malfunctioning battery to remove the battery from the EPS distribution system (overcurrent only). Only the ascent power backup contactors do not have overcurrent protection.

Descent stage battery power (figure 2.5-4) is controlled and monitored by the descent ECA's, which switch and apply the power to the RJB and the deadface relay box (DRB). The power feeders of descent batteries No. 1 and 2 are routed through the RJB deadface relay to the LM Pilot's circuit breaker panel (16). The power feeders of batteries No. 3 and 4 are routed through the DRB deadface relay to the Commander's circuit breaker panel (11). The power from the lunar battery can be routed through the RJB or DRB deadface relays to the LM Pilot's or Commander's circuit breaker panel. In all instances, this circuit arrangement provides for deadfacing all descent battery power in the event of normal staging or abort staging situations. Ascent stage battery power (figure 2.5-5) is controlled and monitored by the ascent ECA's, where the power is switched and applied, through power feeders, to terminal junction points at the RJB and DRB.

Ascent and descent battery main power feeders are routed through circuit breakers to the d-c buses. From the d-c buses, d-c power is distributed through circuit breakers to all LM subsystems.

Two inverters, which make up the EPS a-c section power source, supply all a-c power requirements of the LM. The INVERTER switch connects either inverter to the circuit breakers that supply the a-c buses. Closing the appropriate AC BUS A and AC BUS B circuit breakers on panel 11 connects the selected inverter to feed the a-c buses. Either inverter can supply the LM a-c load requirements.

2.5.3.2 D-C Section.

The EPS d-c section consists of the four descent stage batteries, two descent stage ECA's, two relay switching boxes, two ascent stage batteries, two ascent stage ECA's, a lunar battery, a battery control relay assembly, a control panel, two circuit breaker panels, and two sensor power fuse assemblies.

After ground facility power is disconnected, descent stage batteries No. 1 and 4 are connected at their LV taps. These batteries are under light load (less than 200 watts) at this time; therefore, the LV taps (at the 17th cell of the 20-cell batteries) are used to facilitate discharge of the inherent initial high voltage of the battery. During normal EPS operation, beginning with subsystem activation, descent batteries No. 1 and 4 HV taps and batteries No. 2 and 3 are selected with switches on panel 14.

Power is then fed from the descent stage batteries through their associated ECA's (batteries No. 1 and 2 through ECA No. 1, batteries No. 3 and 4 through ECA No. 2, and, the lunar battery through ECA No. 1 or 2) to the ascent stage via the RJB and DRB, terminating at the LM Pilot's and Commander's d-c buses. The battery feeders are connected to the d-c buses through the 100-ampere EPS: BAT FEED TIE circuit breakers (panels 11 and 16).

From the d-c buses, d-c power is then distributed to the LM subsystems and to the EPS inverters through circuit breakers on panels 16 and 11. During noncritical phases of normal operation, the 30-ampere EPS: CROSS TIE BAL LOADS circuit breakers (panels 11 and 16) are closed to distribute unbalanced loads between buses so that the batteries discharge evenly. The ascent stage batteries supply d-c power to the LM Pilot's and Commander's buses in essentially the same manner as the descent stage batteries. The batteries are selected with the ASCENT POWER switches (panel 14). The corresponding descent and ascent stage batteries (by respective bus) are paralleled during DPS operation, and the EPS: CROSS TIE circuit breakers (panels 11 and 16) are opened, thereby isolating the Commander's and LM Pilot's d-c buses.

The lunar battery supplies power to input power feeders in ECA No. 1 and 2. Switches on panel 14 select the ECA that feeds the associated bus (ECA No. 1 for the LM Pilot's d-c bus, ECA No. 2 for the Commander's d-c bus). The battery control relay assembly logic, in conjunction with ECA No. 1 and 2, inhibits placing the lunar battery and battery No. 2 simultaneously, on the LMP bus, and battery No. 3 and the lunar battery simultaneously on the CDR bus. The battery control relay assembly logic also inhibits placing the lunar battery on both buses simultaneously.

Descent batteries No. 1 and 2 supply power to a power feeder in ECA No. 1. Descent batteries No. 3 and 4 are connected to separate power feeders in ECA No. 2 and are jumpered to the power feeder of the other batteries at the output of the ECA and at the 100-ampere EPS: BAT FEED TIE circuit breakers. Failure of battery No. 3 or 4 therefore permits the other batteries to supply both power feeders. A power feeder short while operating on descent battery power is detected by an overcurrent-sensing circuit in the respective ECA, which disconnects the one or two descent batteries associated with the shorted power feeder. The d-c buses are isolated from the shorted feeder by opening the respective EPS: BAT FEED TIE circuit breakers. During an emergency, either operating d-c bus can supply power to the inoperative isolated bus if the EPS: CROSS TIE BUS circuit breakers (panels 11 and 16) are closed. A similar condition, whereby a shorted feeder is automatically isolated, exists when operating on both ascent batteries. However, the battery associated with the shorted feeder can be connected manually to the power feeder of the other ascent battery by setting the respective BACK UP FEED switch (panel 14) to ON, thereby permitting continued use of the battery.

Notes:
1. The number above or below the circuit breaker pictorial indicates the related reference designation. It should be preceded by 4CB.
2. The number adjacent to the circuit breaker schematic symbol indicates amperage rating.

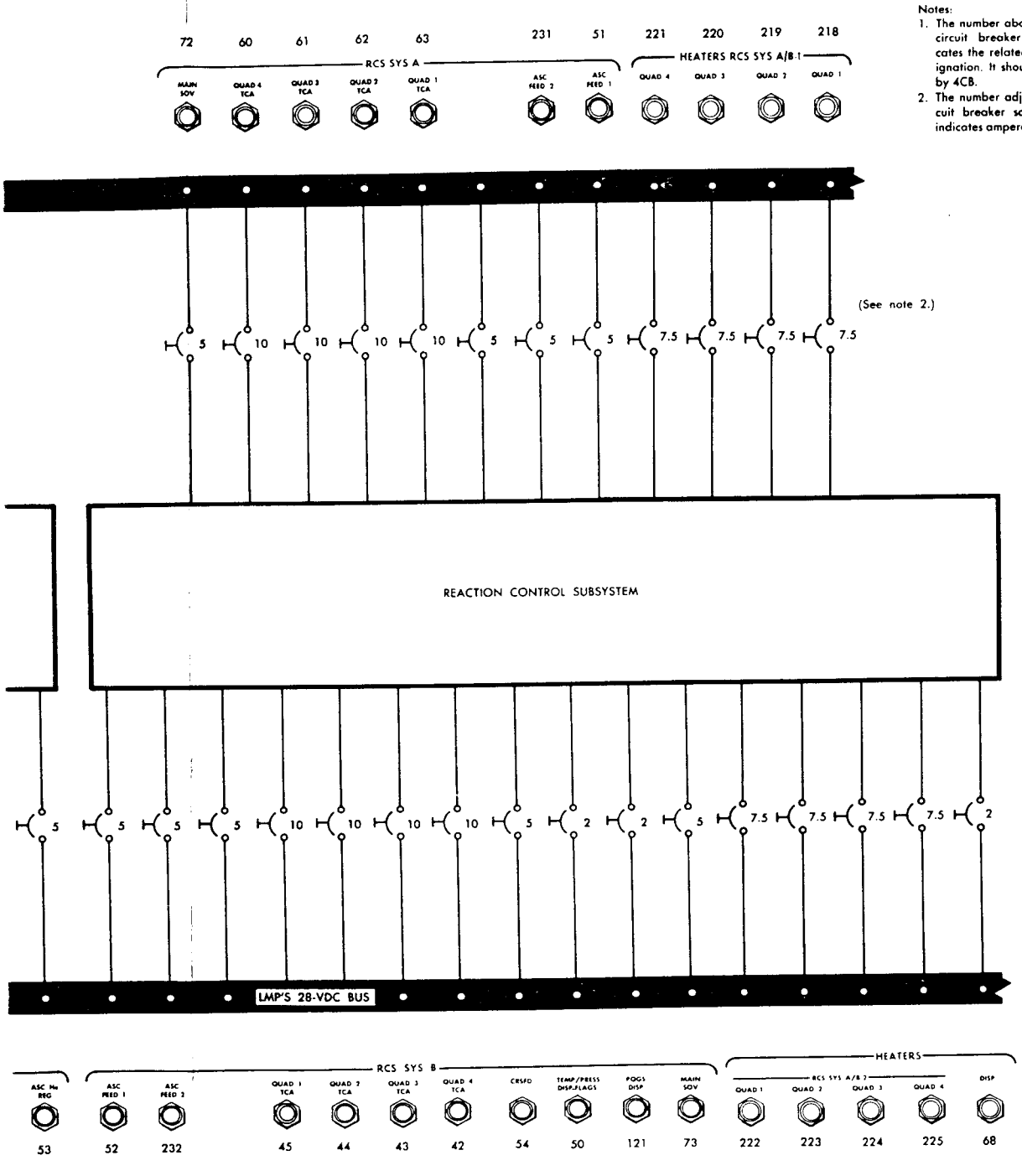

Figure 2.5-2. Electrical Power Subsystem - Power Interface Diagram (Sheet 1 of 3)

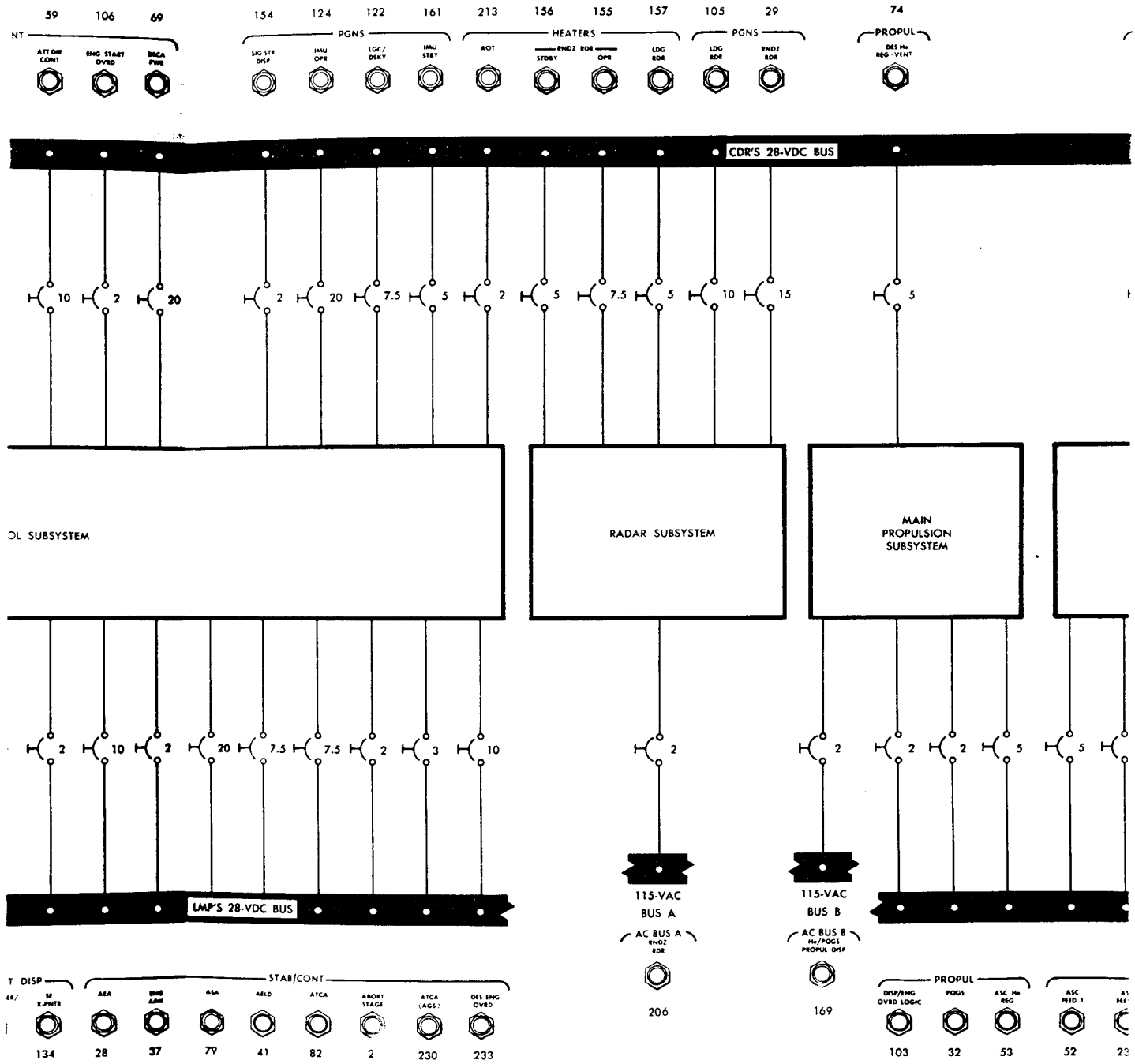
59
106
69
154
124
122
161
213
156
155
157
105
29
74
PGNS
HEATERS
PGNS
PROPUL
CDR'S 28-VDC BUS
10
2
20
2
20
7.5
5
2
5
7.5
5
10
15
5
RADAR SUBSYSTEM
MAIN PROPULSION SUBSYSTEM
2
10
2
20
7.5
7.5
2
3
10
2
2
2
2
5
5
LMP'S 28-VDC BUS
115-VAC BUS A
115-VAC BUS B
AC BUS A
AC BUS B
206
169
STAB/CONT
PROPUL
134
28
37
79
41
82
2
230
233
103
32
53
52

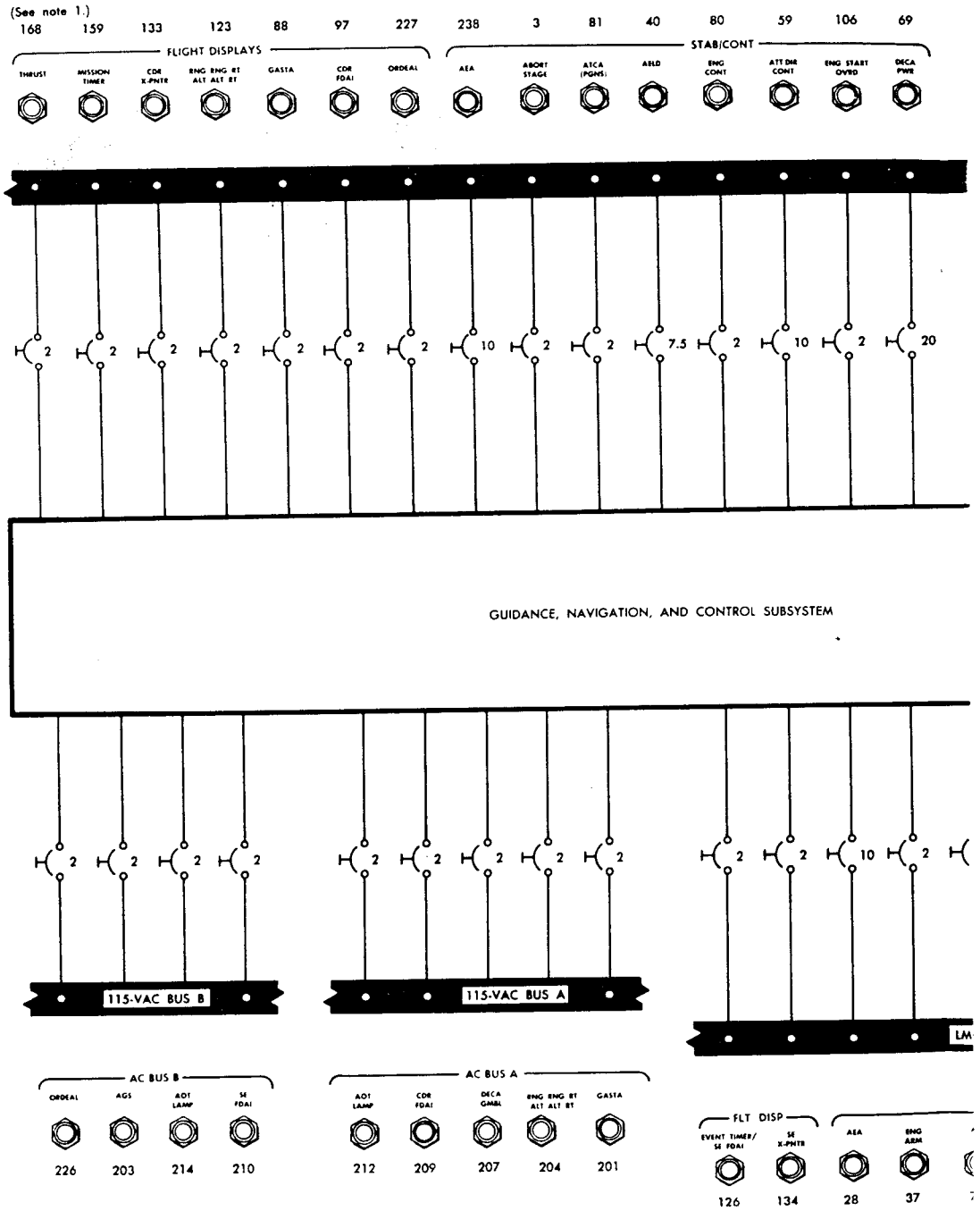
(See note 1.)
168 159 133 123 88 97 227 238 3 81 40 80 59 106 69
FLIGHT DISPLAYS
THRUST
MISSION TIMER
CDR X-PNTR
RNG RNG RT ALT ALT RT
GASTA
CDR FDAI
ORDEAL
STAB/CONT
AEA
ABORT STAGE
ATCA (PGNS)
ARLD
ENG CONT
ATT DMP CONT
ENG START OVRD
DECA PWR
2 2 2 2 2 2 2 10 2 2 7.5 2 10 2 20
GUIDANCE, NAVIGATION, AND CONTROL SUBSYSTEM
2 2 2 2 2 2 2 2 2 2 2 10 2
115-VAC BUS B
115-VAC BUS A
AC BUS B
ORDEAL
AGS
AOT LAMP
SE FDAI
226 203 214 210
AC BUS A
AOT LAMP
CDR FDAI
DECA GMBL
RNG RNG RT ALT ALT RT
GASTA
212 209 207 204 201
FLT DISP
EVENT TIMER/ SE FDAI
SE X-PNTR
126 134
AEA
RNG ARM
28 37

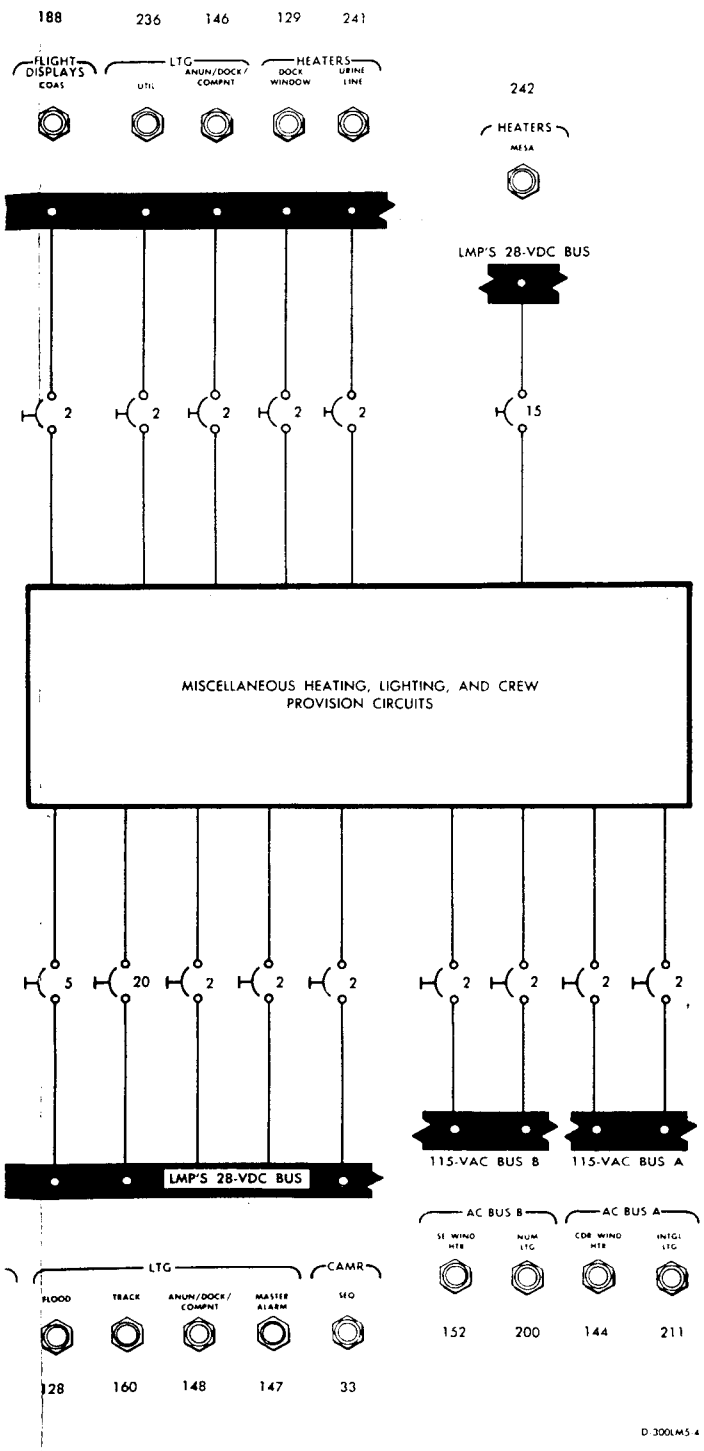
188
236
146
129
241
FLIGHT DISPLAYS
EDAS
LTG
UTIL
ANUN/DOCK/COMPNT
HEATERS
DOCK WINDOW
URINE LINE
242
HEATERS
MESA
LMP'S 28-VDC BUS
2
2
2
2
2
15
MISCELLANEOUS HEATING, LIGHTING, AND CREW PROVISION CIRCUITS
5
20
2
2
2
2
2
2
2
LMP'S 28-VDC BUS
115-VAC BUS B
115-VAC BUS A
AC BUS B
AC BUS A
SE WIND HTR
NUM LTG
CDR WIND HTR
INTGL LTG
152
200
144
211
LTG
CAMR
FLOOD
TRACK
ANUN/DOCK/COMPNT
MASTER ALARM
SEQ
128
160
148
147
33
D 300LM5 4

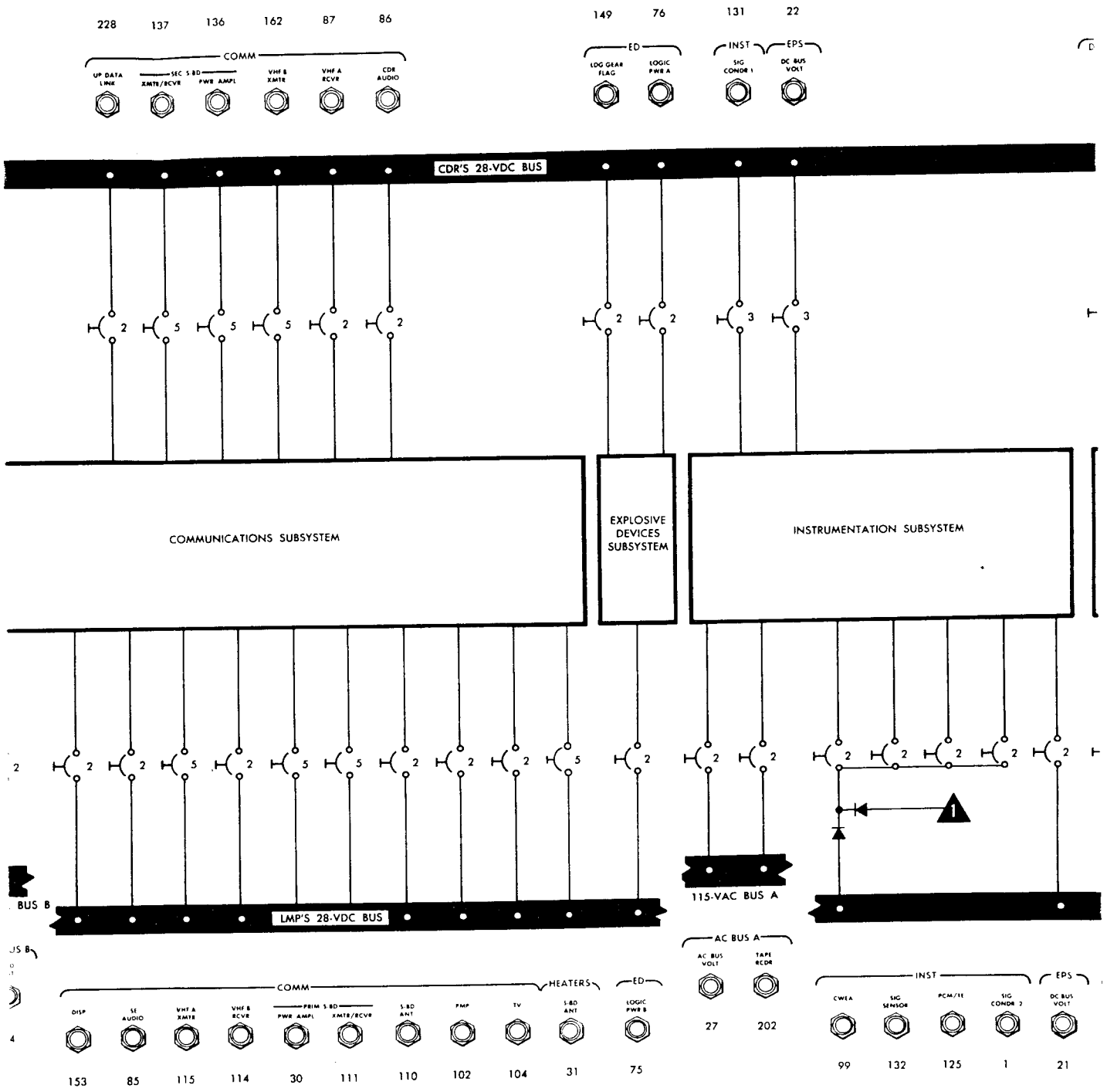

heet 2 of 3)

1 April 1971

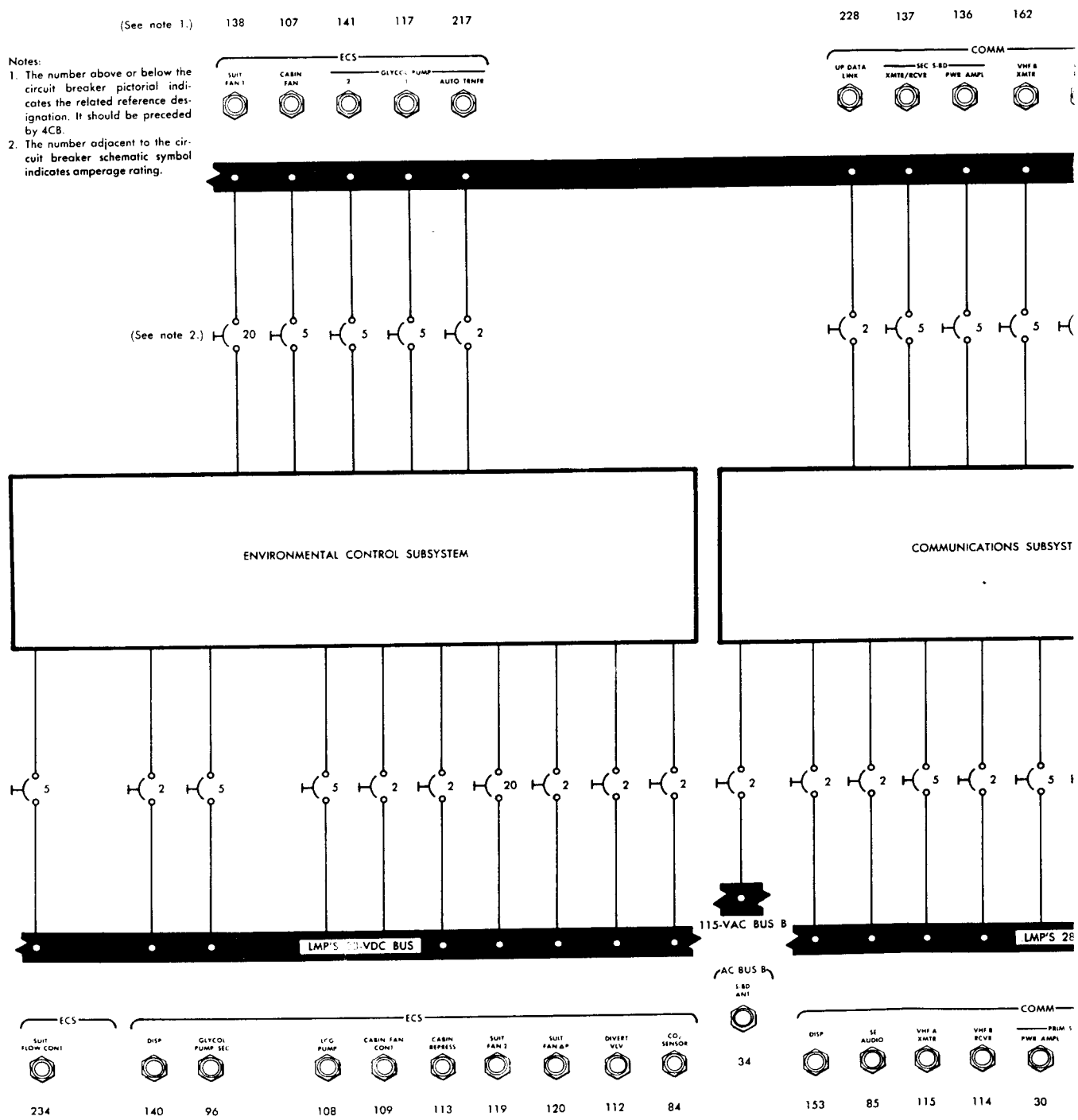

Figure 2.5-2. Electrical Power Subsystem - Power Interface Diagram (Sheet 2 of 3)

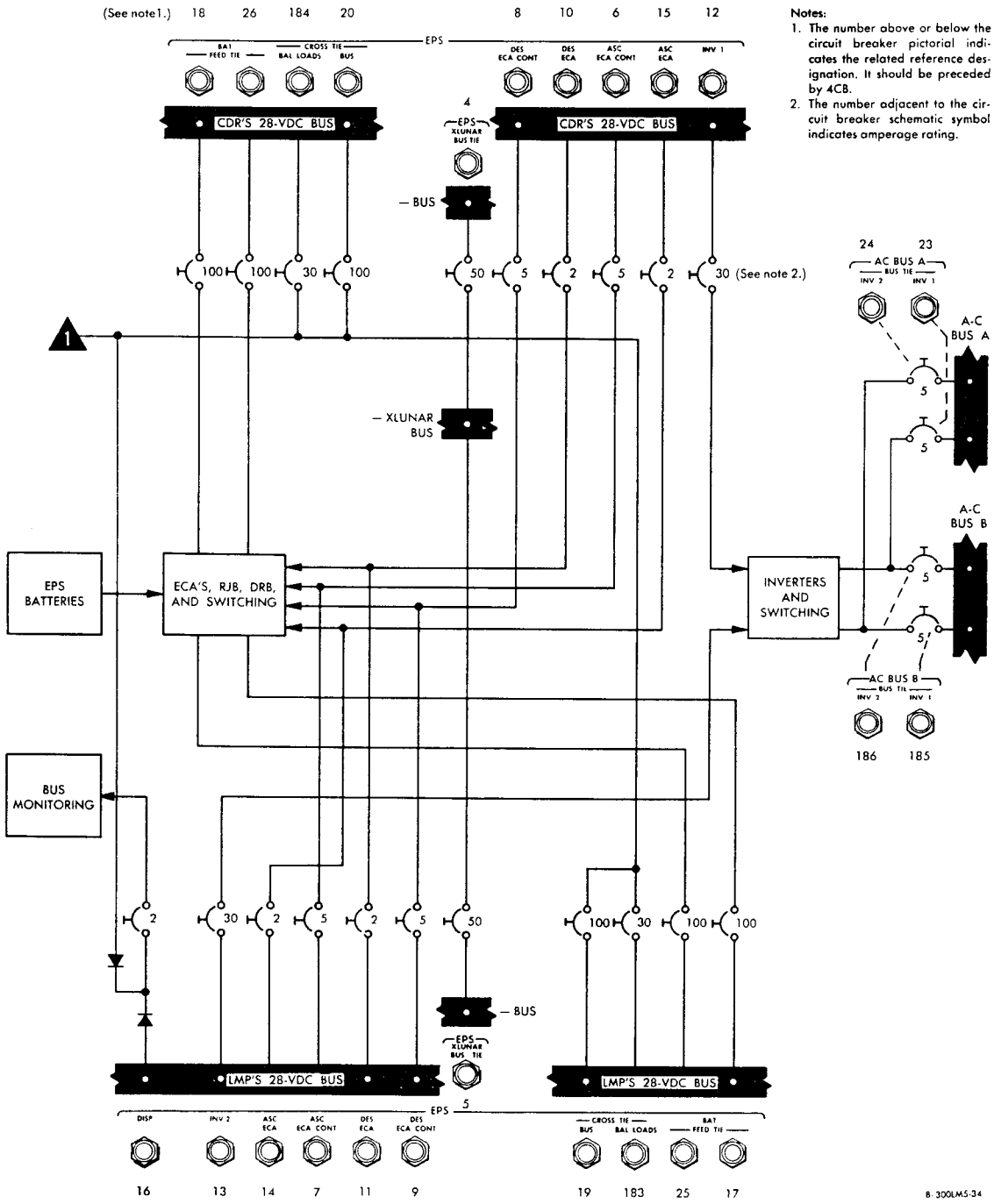

Notes:
1. The number above or below the circuit breaker pictorial indicates the related reference designation. It should be preceded by 4CB.
2. The number adjacent to the circuit breaker schematic symbol indicates amperage rating.

Figure 2.5-2. Electrical Power Subsystem - Power Interface Diagram (Sheet 3 of 3)

2.5.3.3 A-C Section.

A-C power is provided to LM subsystems by either of two identical, redundant inverters; it is controlled by the EPS: INV 1 and INV 2 circuit breakers (panel 11 and 16, respectively), the INVERTER switch, and the AC BUS A: BUS TIE or AC BUS B: BUS TIE circuit breakers on panel 11. The EPS: INV 1 or INV 2 circuit breaker supplies 28 volts dc from the LM Pilot's or Commander's 28-volt d-c bus to the chosen normally synced inverter, where the dc is changed to 115-volt, 400-cps, a-c power (350 volt-amperes, steady-state). The INVERTER switch selects the output of either inverter and routes it to the a-c buses via the respective AC BUS: BUS TIE circuit breakers. Normally, inverter No. 2 is energized when the LM subsystems are first activated and connected to the a-c buses. Inverter No. 1 functions as backup during the mission, except that it is the operating inverter during DPS and APS engine burns. An a-c bus voltage and frequency readout signal is supplied from a-c bus A, via the AC BUS A: AC BUS VOLT circuit breaker (panel 11), to the IS for telemetry and caution light display. An out-of-tolerance frequency (less than 398 cps or more than 402 cps) or a low-voltage condition (less than 112 volts ac) causes the INVERTER caution light (panel 2) to go on. The astronaut determines the cause of the malfunction and performs corrective action. The INVERTER caution light goes out when the malfunction is remedied. (When the INVERTER caution light goes on, the MASTER ALARM pushbutton/light on panels 1 and 2 goes on and a tone is generated for the astronaut headsets. Pressing either MASTER ALARM pushbutton/light extinguishes the pushbutton/lights and terminates the tone.) When set to AC BUS, the POWER/TEMP MON selector switch (panel 14) selects a-c bus A for voltage display on the VOLTS indicator (panel 14); the reading on the AMPS indicator has no significance.

2.5.3.4 Power Monitoring.

The primary a-c and d-c voltage levels, d-c current consumption, and the status of all main power feeders must be monitored periodically to ensure availability of proper power for all LM subsystems, throughout the mission. This monitoring is normally the responsibility of the LM Pilot, who controls the ELECTRICAL POWER portion of panel (14). This panel has talkbacks that indicate main power feeder status, indicators that display battery and bus voltages and battery current, and component caution lights that are used for detecting shorted buses or main power feeder lines and for isolating a malfunctioning battery. Availability of redundant a-c and d-c power permits the astronaut to disconnect, substitute or reconnect batteries, feeder lines, buses, or inverters to assure a continuous electrical supply.

2.5.3.4.1 Battery Status-Monitoring Circuits. (See figure 2.5-6.)

Talkbacks on panel 14 indicate the status of the descent and ascent batteries (on or off the line). A DESCENT POWER talkback barber-pole display signifies that the related battery is disconnected from its main power feeder; a gray display, showing LO, that the battery low-voltage tap is connected to the power distribution system via the main power feeder; a gray display, that the high-voltage tap is connected to the power distribution system. A DES BATS talkback gray display signifies that the descent battery outputs are connected to the ascent stage; a barber-pole display, that these power lines are disconnected and the ascent stage is isolated electrically from the descent stage. The ASCENT POWER talkbacks indicate that their related ascent battery is connected (gray) or disconnected (barber pole) from the respective normal feed or backup feed main power feeder lines. The LUNAR BAT talkback CDR, LMP, and barber-pole displays indicate that the lunar battery is on the CDR bus, the LMP bus, or is off-line.

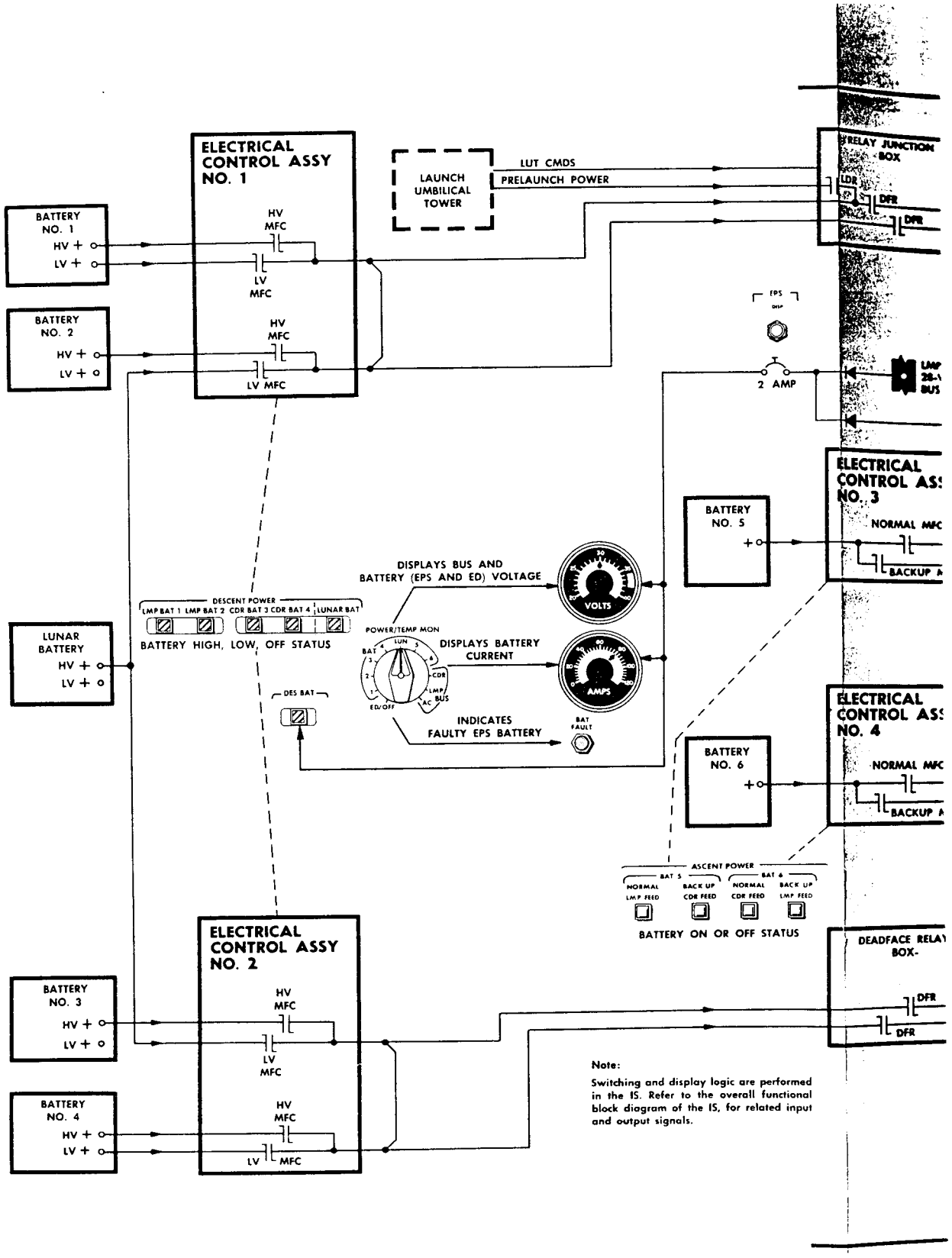
ELECTRICAL CONTROL ASSY NO. 1
HV MFC
LV MFC
HV MFC
LV MFC
BATTERY NO. 1
HV +
LV +
BATTERY NO. 2
HV +
LV +
LAUNCH UMBILICAL TOWER
LUT CMDS
PRELAUNCH POWER
RELAY JUNCTION BOX
LDR
DFR
DFR
EPS
2 AMP
ELECTRICAL CONTROL ASS NO. 3
NORMAL MFC
BACKUP
BATTERY NO. 5
+
DISPLAYS BUS AND BATTERY (EPS AND ED) VOLTAGE
VOLTS
DESCENT POWER
LMP BAT 1
LMP BAT 2
CDR BAT 3
CDR BAT 4
LUNAR BAT
BATTERY HIGH, LOW, OFF STATUS
POWER/TEMP MON
LUN
BAT 4
5
6
3
2
1
CDR
LMP/BUS
AC
ED/OFF
DISPLAYS BATTERY CURRENT
AMPS
LUNAR BATTERY
HV +
LV +
DES BAT
INDICATES FAULTY EPS BATTERY
BAT FAULT
ELECTRICAL CONTROL ASS NO. 4
NORMAL MFC
BACKUP
BATTERY NO. 6
+
ASCENT POWER
BAT 5
BAT 6
NORMAL LMP FEED
BACK UP CDR FEED
NORMAL CDR FEED
BACK UP LMP FEED
BATTERY ON OR OFF STATUS
ELECTRICAL CONTROL ASSY NO. 2
HV MFC
LV MFC
HV MFC
LV MFC
BATTERY NO. 3
HV +
LV +
BATTERY NO. 4
HV +
LV +
DEADFACE RELAY BOX
DFR
DFR
Note:
Switching and display logic are performed in the IS. Refer to the overall functional block diagram of the IS, for related input and output signals.

Mission LM

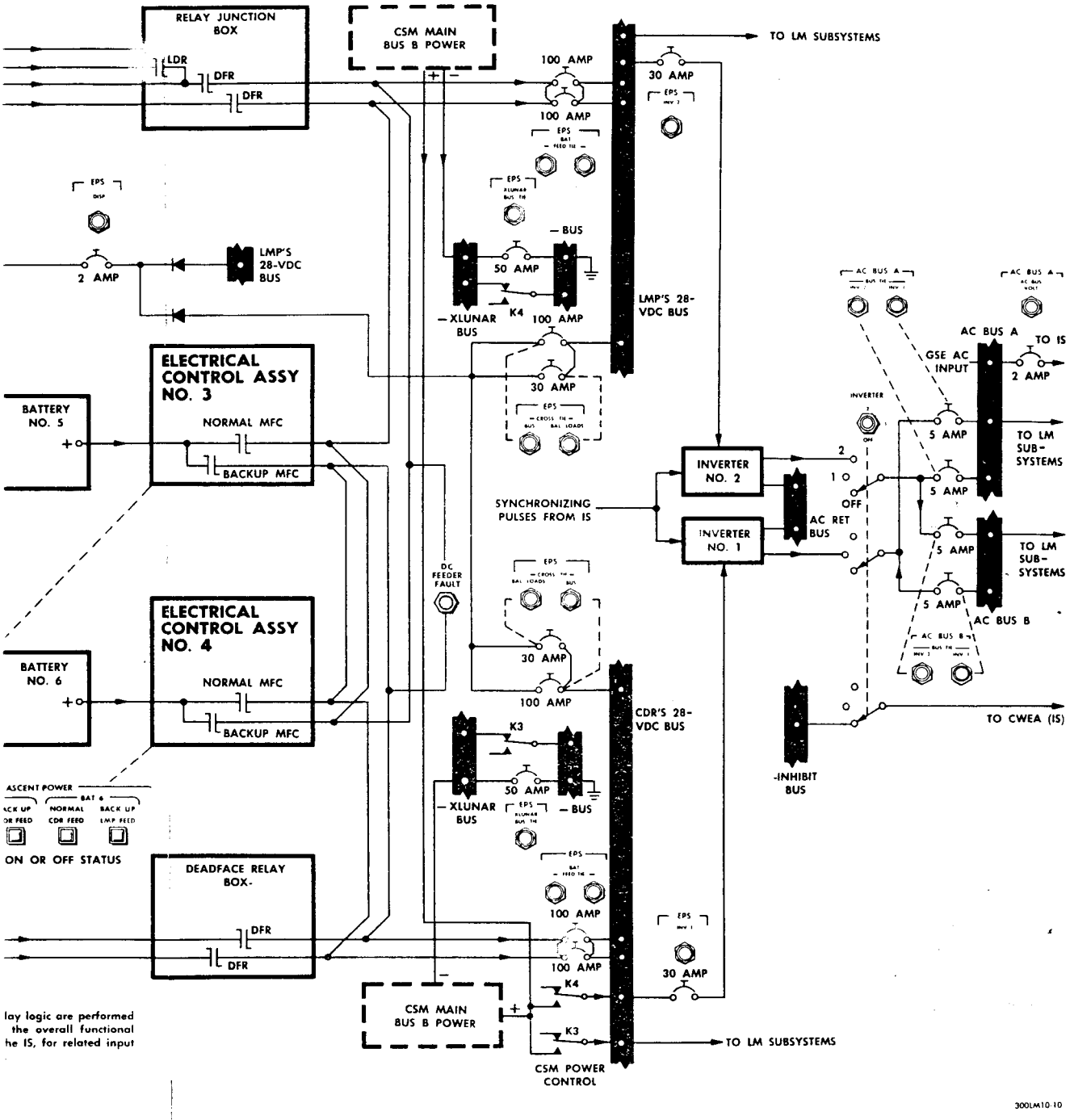

Figure 2.5-3. Electrical Power Subsystem - Functional Flow Diagram

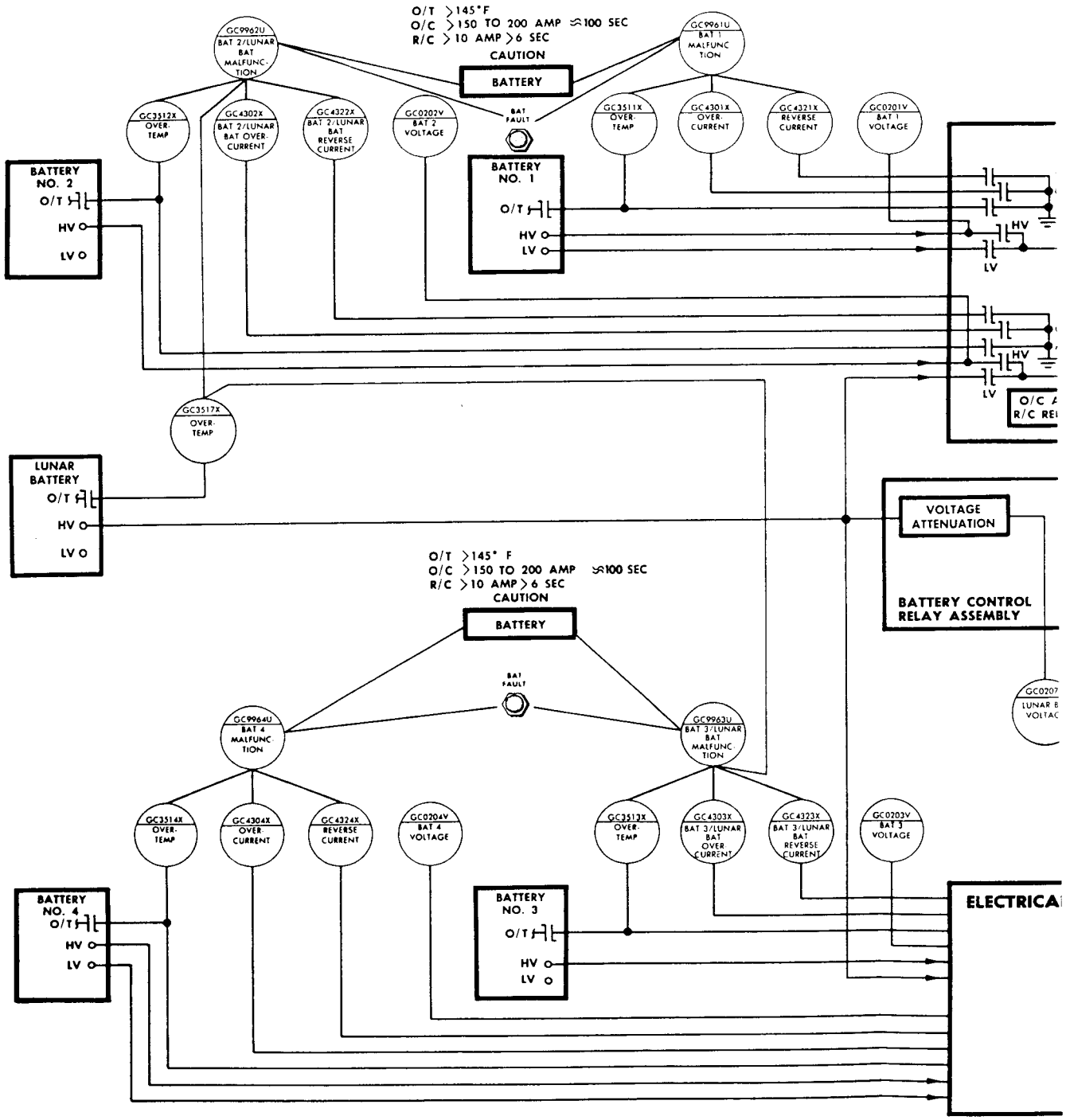

Figure 2.5-4. Descent Power Distribution - Functional Block Diagram

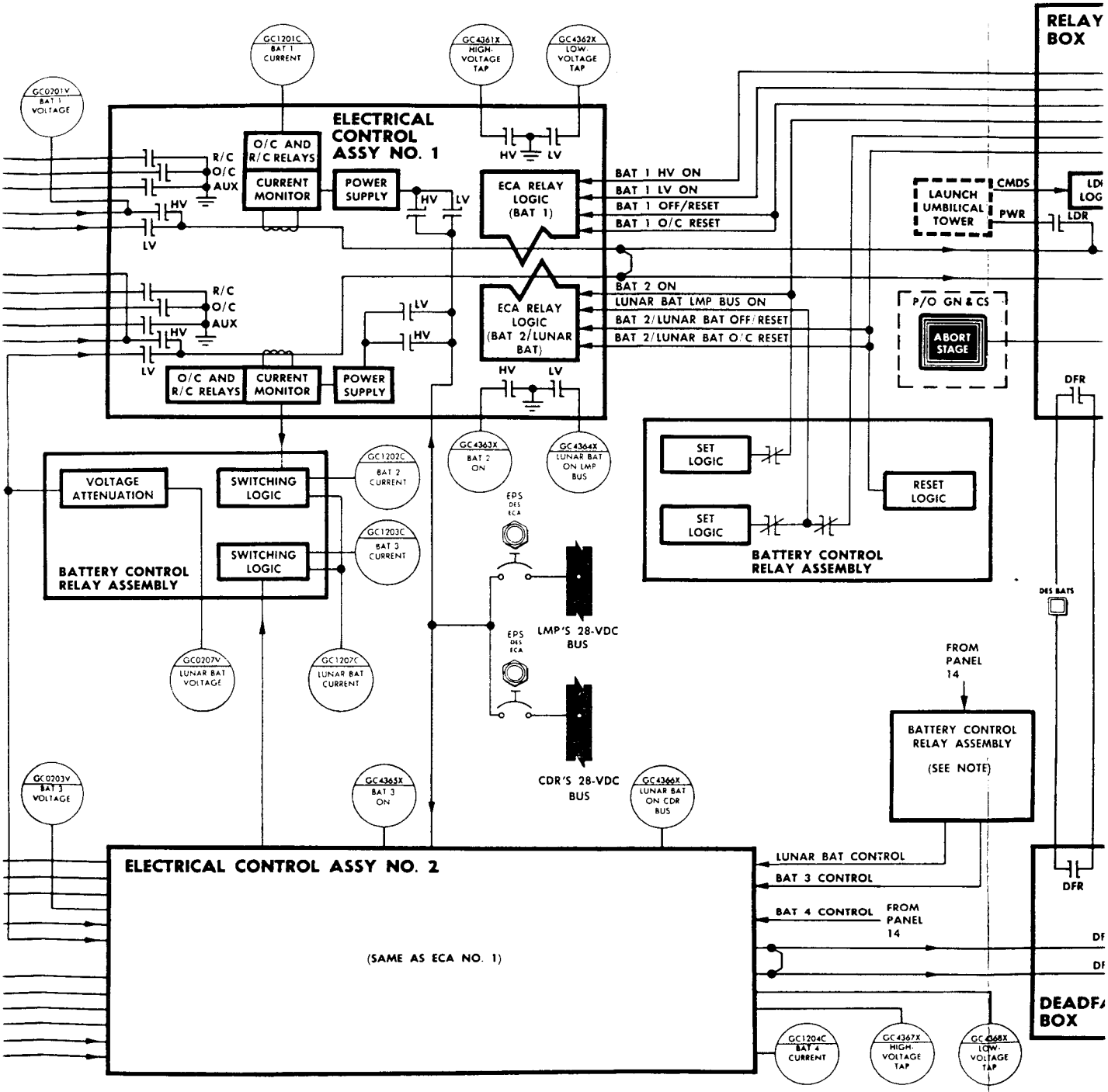
ELECTRICAL CONTROL ASSY NO. 1
O/C AND R/C RELAYS
CURRENT MONITOR
POWER SUPPLY
ECA RELAY LOGIC (BAT 1)
ECA RELAY LOGIC (BAT 2/LUNAR BAT)
R/C
O/C
AUX
HV
LV
GC1201C BAT 1 CURRENT
GC4361X HIGH-VOLTAGE TAP
GC4362X LOW-VOLTAGE TAP
GC0201V BAT 1 VOLTAGE
BAT 1 HV ON
BAT 1 LV ON
BAT 1 OFF/RESET
BAT 1 O/C RESET
BAT 2 ON
LUNAR BAT LMP BUS ON
BAT 2/LUNAR BAT OFF/RESET
BAT 2/LUNAR BAT O/C RESET
LAUNCH UMBILICAL TOWER
CMDS
PWR
LDR
P/O GN & CS
ABORT STAGE
DFR
RELAY BOX
VOLTAGE ATTENUATION
SWITCHING LOGIC
BATTERY CONTROL RELAY ASSEMBLY
GC1202C BAT 2 CURRENT
GC1203C BAT 3 CURRENT
GC4363X BAT 2 ON
GC4364X LUNAR BAT ON LMP BUS
SET LOGIC
RESET LOGIC
EPS DES ECA
LMP'S 28-VDC BUS
CDR'S 28-VDC BUS
DES BATS
GC0207V LUNAR BAT VOLTAGE
GC1207C LUNAR BAT CURRENT
FROM PANEL 14
BATTERY CONTROL RELAY ASSEMBLY (SEE NOTE)
GC0203V BAT 3 VOLTAGE
GC4365X BAT 3 ON
GC4366X LUNAR BAT ON CDR BUS
ELECTRICAL CONTROL ASSY NO. 2
(SAME AS ECA NO. 1)
LUNAR BAT CONTROL
BAT 3 CONTROL
BAT 4 CONTROL
GC1204C BAT 4 CURRENT
GC4367X HIGH-VOLTAGE TAP
GC4368X LOW-VOLTAGE TAP
DEADFA BOX

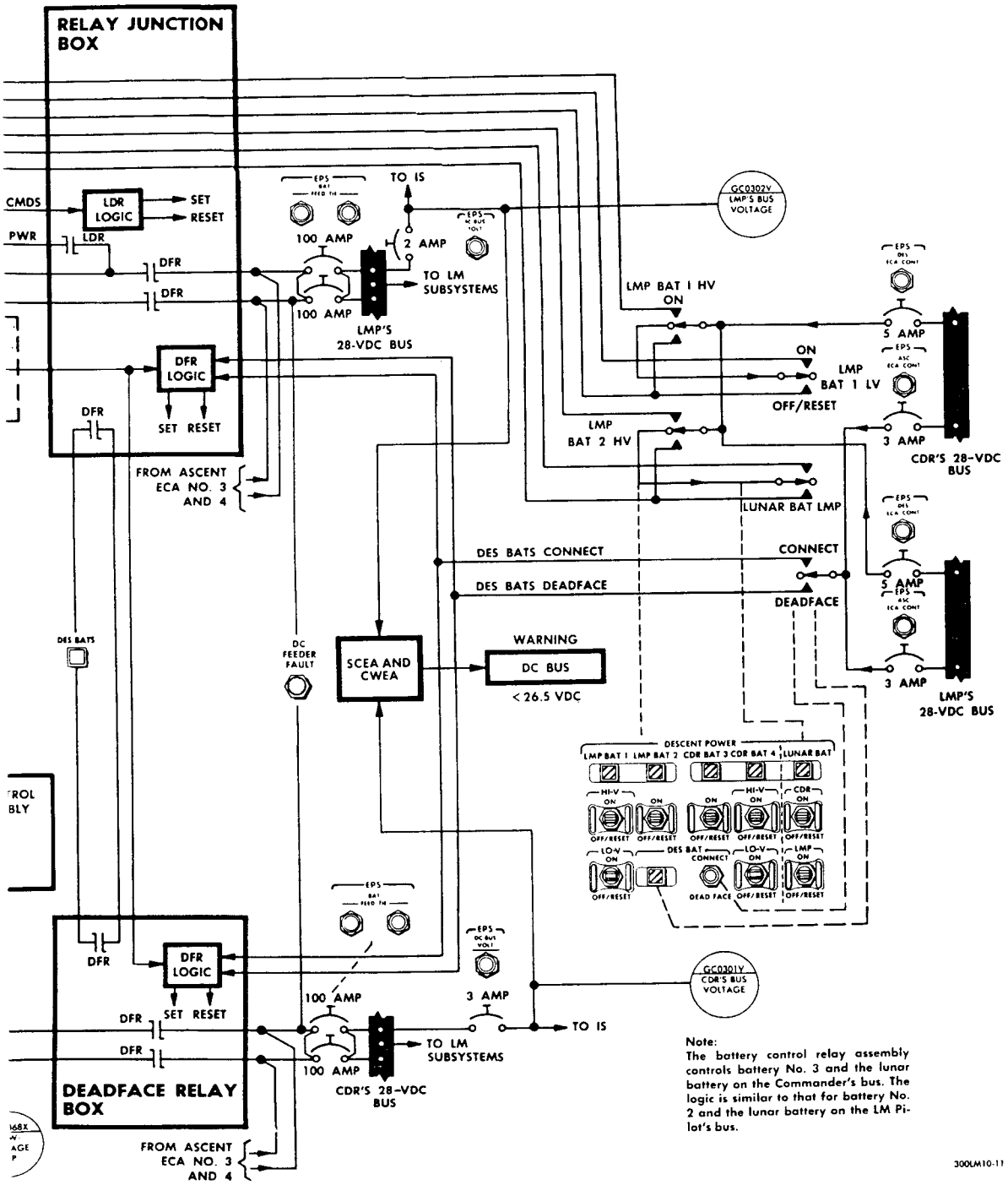

Note:
The battery control relay assembly controls battery No. 3 and the lunar battery on the Commander's bus. The logic is similar to that for battery No. 2 and the lunar battery on the LM Pilot's bus.

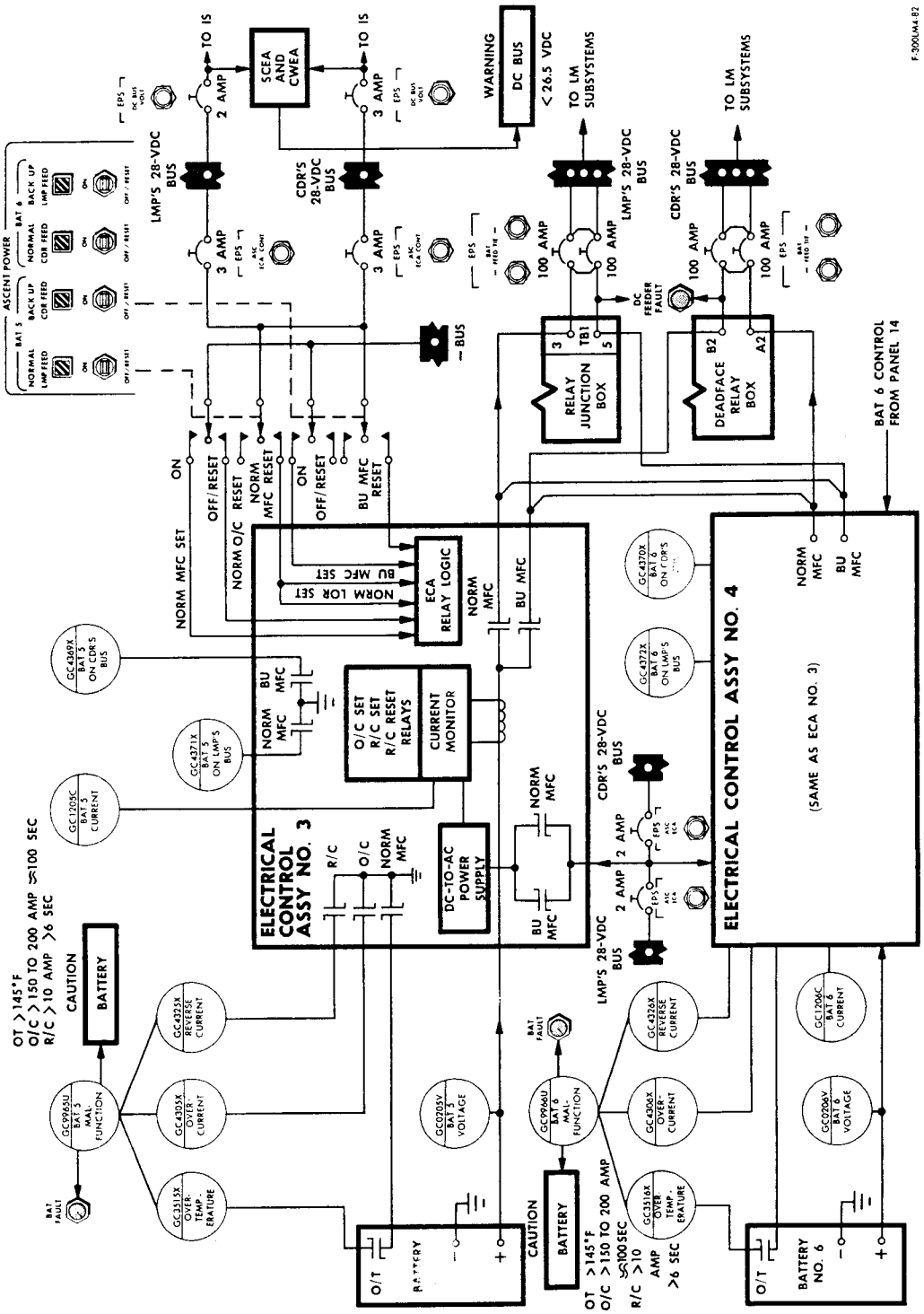

Figure 2.5-5. Ascent Power Distribution - Functional Block Diagram

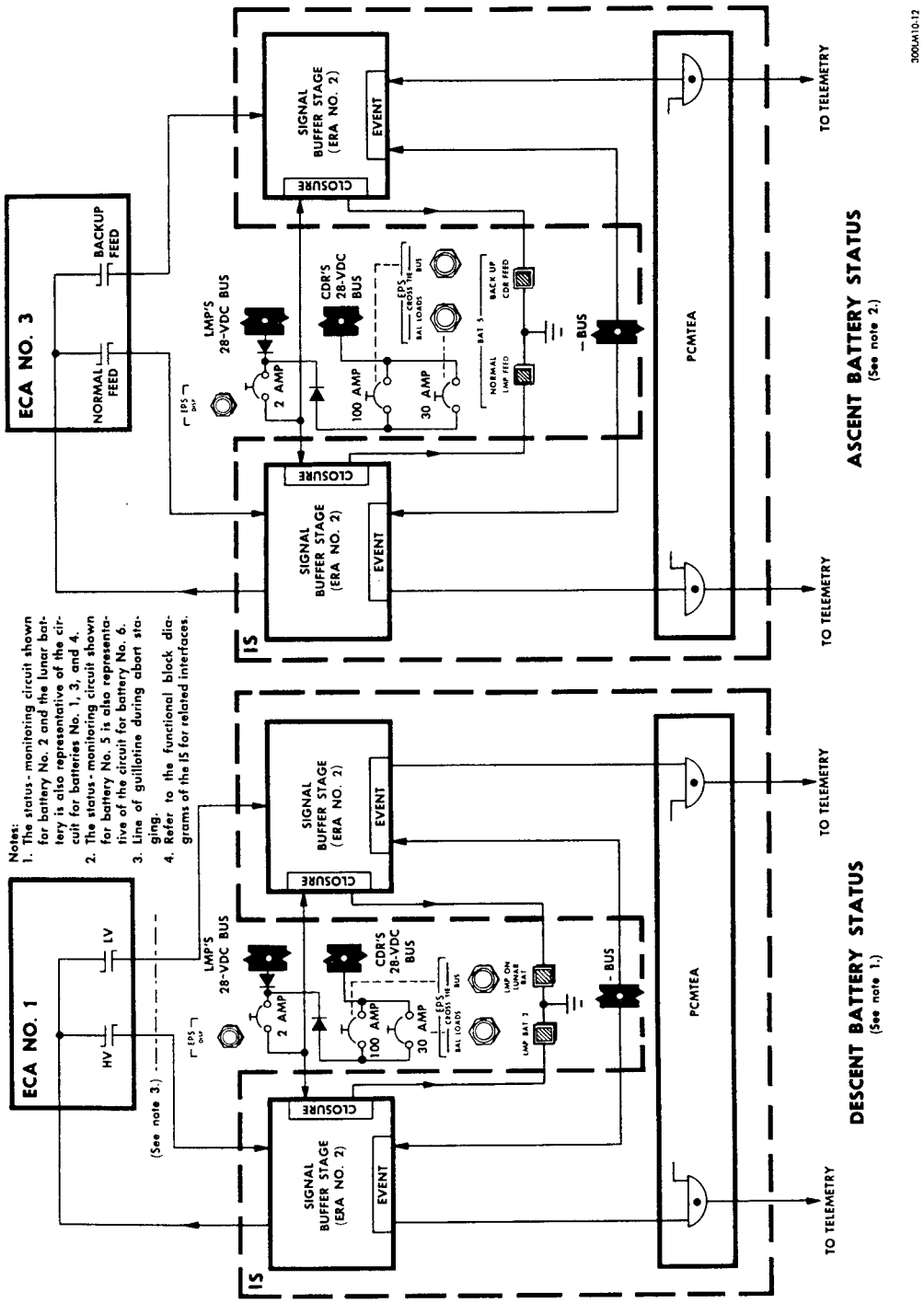

Figure 2.5-6. Battery Status - Monitoring Circuits, LM 10 and Subsequent - Simplified Schematic Diagram

When a descent battery is disconnected from its main feeder line, its related talkback provides a barber-pole display. Setting a high-voltage (or low volt[illegible] switch (panel 14) to ON energizes the related high-voltage (or low-voltage) MFC [illegible]y in th[illegible] spective ECA. The relay contacts close, permitting a signal to pass to a signal bu[illegible] stage [illegible]ERA No. 2 of the IS. D-C power, supplied to the buffer stage from the LM Pilot's d[illegible] bus, passes to the talkback upon arrival of the ECA output signal. Output closure signals of the high-voltage (or low-voltage) signal buffer stages are connected to individual coils (in the talkback assembly), which, when energized, activate talkbacks to display the status of the batteries. In addition, receipt of an ECA output signal at the signal buffer stages causes an event signal to be routed to the PCMTEA, for telemetry.

When the lunar battery is disconnected from its main feeder line in both ECA's, the LUNAR BAT talkback provides a barberpole display. Setting the LMP LUNAR BAT switch (panel 14) to ON, energizes the related MFC relay in ECA No. 1 and activates the LUNAR BAT talkback to display LMP. When the CDR LUNAR BAT switch is set to ON, the related MFC relay in ECA No. 2 is energized and the LUNAR BAT talkback displays CDR. Three conditions are associated with batteries No. 1 and 4: high-voltage tap on the power feeder line, low-voltage tap on the power-feeder line, and battery completely off the power feeder line. Two conditions are associated with batteries No. 2 and 3: voltage on or off the power feeder line. Three conditions are associated with the lunar battery: voltage on the LMP or CDR power feeder line, or voltage completely off the power feeder lines.

EPS

Four conditions are associated with each ascent battery: battery on or off the normal power feeder line (for that particular battery) and battery on or off the backup power feeder line. These conditions are determined by the setting of the NORMAL FEED and BACK UP FEED switches (panel 14). Operation of the ASCENT POWER talkbacks and generation of the activating signals are similar to that of the DESCENT POWER talkbacks, except that each signal buffer stage output closure signal is routed to an individual talkback and each talkback provides only two displays (gray or barber pole). Telemetry signals are also generated within the PCMTEA for ascent battery monitoring.

2.5.3.4.2 Battery Voltage—and Current-Monitoring Circuits. (See figure 2.5-7.)

The VOLTS and AMPS indicators (panel 14) enable monitoring the terminal voltage and current draw of each descent battery (high-voltage tap for voltage only) and ascent battery. In addition, the VOLTS indicator, when used in conjunction with the POWER/TEMP MON selector switch and the ED VOLTS switch (panel 14), monitors the terminal voltage of ED batteries A and B of the EDS. Except that a descent ECA controls two batteries and an ascent ECA controls one battery, the voltage- and current-monitoring circuits of each EPS battery are essentially the same. Therefore, the voltage- and current-monitoring circuits of only one EPS battery are described.

The positive terminal of the EPS battery is connected through a 1/8-ampere fuse (in the respective ECA) to an attenuator in ERA No. 2 of the IS. The attenuator input signal is in the range of 0 to 40 volts dc. The resultant attenuator output (0 to 5 volts dc) is an analog of the input signal. This output is routed directly to its assigned terminal of the POWER/TEMP MON selector switch. When the switch is set to the battery position (BAT 1 through BAT 6, and LUN for LM 10 and subsequent), the analog is routed to the positive terminal of the VOLTS indicator and displayed. (The indicator scale is graduated from 20 to 40 volts dc; although the input signal is of considerably smaller magnitude.) Only the high-voltage positive tap of each descent battery is monitored in this manner. Each ascent battery has only one positive terminal.

Battery current flowing through the main feeder line (normal or backup feeder for ascent batteries, high- or low-voltage feeder for descent batteries) is sensed by the related current monitor coil in its respective ECA. Each battery has an individual current monitor circuit; the lunar battery uses current monitor circuits of battery No. 2 for the LMP bus; and current monitor circuits of battery No. 3, for the CDR bus. The monitor senses the magnitude of current flow through the associated main feeder line and provides a representative analog output. This analog is routed to a specific terminal (assigned by battery number) on a deck of the POWER/TEMP MON selector switch, as are the current analogs of all other ascent and descent batteries. When the switch is set to the battery position, the analog is routed to the positive terminal of the AMPS indicator and displayed. (The indicator scale is graduated from 0 to 120 amperes, although its input signal is of considerably smaller magnitude). Ascent battery current is read directly from the indicator; for descent battery current, the indicator reading must be halved.

The positive and negative terminals of the two ED batteries are connected to respective contacts of the ED VOLTS switch. When the switch is set momentarily to BAT A or BAT B, that particular battery is connected to signal conditioner (SC) No. 1 in the IS. The SC output is a conditioned analog (0 to +5 volts dc) that represents the actual ED battery terminal voltage (0 to +40 volts dc), which is routed to the ED/OFF terminal of the POWER/TEMP MON selector switch, for voltage monitoring.

2.5.3.4.3 Primary Bus Voltage-Monitoring Circuits. (See figure 2.5-8.)

The Commander's d-c bus, the LM Pilot's d-c bus, and a-c bus A are monitored periodically for the proper voltage level, to ensure application of adequate power to all LM subsystems. Monitoring is accomplished by selecting the bus, with the POWER/TEMP MON selector switch, and reading the associated voltage on the VOLTS indicator. The readings on the AMPS indicator have no significance. D-C bus voltages are read directly from the indicator scale, which is graduated from 20 to 40 volts dc; for a-c readings, conversion is required. The d-c scale is equivalent to a range of 62.5 to 125 volts ac, when monitoring the a-c bus. The indicator green band is equivalent to the nominal a-c range of 112 to 118 volts.

The Commander's d-c bus is connected via the EPS: DC BUS VOLT circuit breaker (panel 11) to an attenuator in ERA No. 1 of the IS. The attenuated signal is routed to the CWEA and through an isolation amplifier. The 0- to 5-volt attenuated d-c signal is an analog, which is fed to the PCMTEA for telemetry and to the CDR terminal of the POWER/TEMP MON selector switch. Except that it is processed through ERA No. 2, the LM Pilot's d-c bus analog is connected to the LMP terminal of the switch in like manner. The attenuated analogs of the Commander's and LM Pilot's d-c bus voltages are fed through buffer amplifiers and an OR gate. If the d-c voltage on either bus drops below 26.5 volts, a CWEA relay is energized; its contacts close to provide a ground return to the DC BUS warning light (panel 1), causing it to go on. The warning light goes off when the bus voltage is again within limits.

A-C bus A (115 volts) is connected via the AC BUS A: AC BUS VOLT circuit breaker to a frequency-to-dc stage and an ac-to-dc stage in ERA No. 1. The d-c output signals are fed to the CWEA and to isolation amplifiers. The amplifier outputs are fed to the PCMTEA for telemetry. A 0- to 5-volt d-c analog signal from the ac-to-dc stage isolation amplifier is sent to the AC terminal of the POWER/TEMP MON selector switch. Selecting this switch position routes the analog signal to the positive terminal of the VOLTS indicator. The output signals of the frequency-to-dc and ac-to-dc converters are also fed through buffer amplifiers and an OR gate to an AND gate in the CWEA. An inhibit signal is routed to this AND gate when the INVERTER switch is set to OFF, thereby inhibiting signal passage. Setting the switch to 1 or 2 removes the inhibit signal. If the a-c bus A voltage is less than 112 volts, or if the a-c bus frequency is less than 398 cps or more than 402 cps, a CWEA relay is energized; its contacts close to provide a ground return to the INVERTER caution light (panel 2), causing it to go on. The INVERTER light goes off when the a-c bus voltage and frequency are again within limits.

2.5.3.4.4 Malfunctioning-Battery Isolation Circuitry. (See figure 2.5-9.)

The BATTERY caution light (panel 2) goes on when there is an overtemperature, overcurrent, or reverse-current condition in any EPS battery. The malfunction isolation circuitry associated with each battery, within its respective ECA, is essentially the same. Only the isolation circuitry of one battery in ECA No. 1 is discussed.

D-C power from the related SC in the IS is supplied to the paralleled array of malfunction relay contacts within ECA No. 1. Thermal sensors, in parallel within the battery, close if any cells overheat; a reverse-current or overcurrent condition causes the respective relays in the ECA to become energized and related relay contacts close. If either of these conditions exists, the d-c power from the SC flows through the respective set of contacts back to the SC and to a CWEA OR gate. The OR-gate output energizes a CWEA relay that provides a ground return to the BATTERY caution light, causing it to go on. The caution light goes off when the malfunction that caused it to go on is eliminated.

The d-c signal fed back to the SC from the ECA activates an event gate, which provides a channeled signal to the pulse code modulator of the IS, for telemetry. This same d-c signal also activates a contact closure gate, completing a circuit from the BAT FAULT component caution light (panel 14) to the respective battery terminal of the POWER/TEMP MON selector switch. Setting the switch to this battery position applies a ground return to the light, causing it to go on. The malfunctioning battery is identified by the placarded switch position. The light goes off when the malfunction is corrected, or the battery is

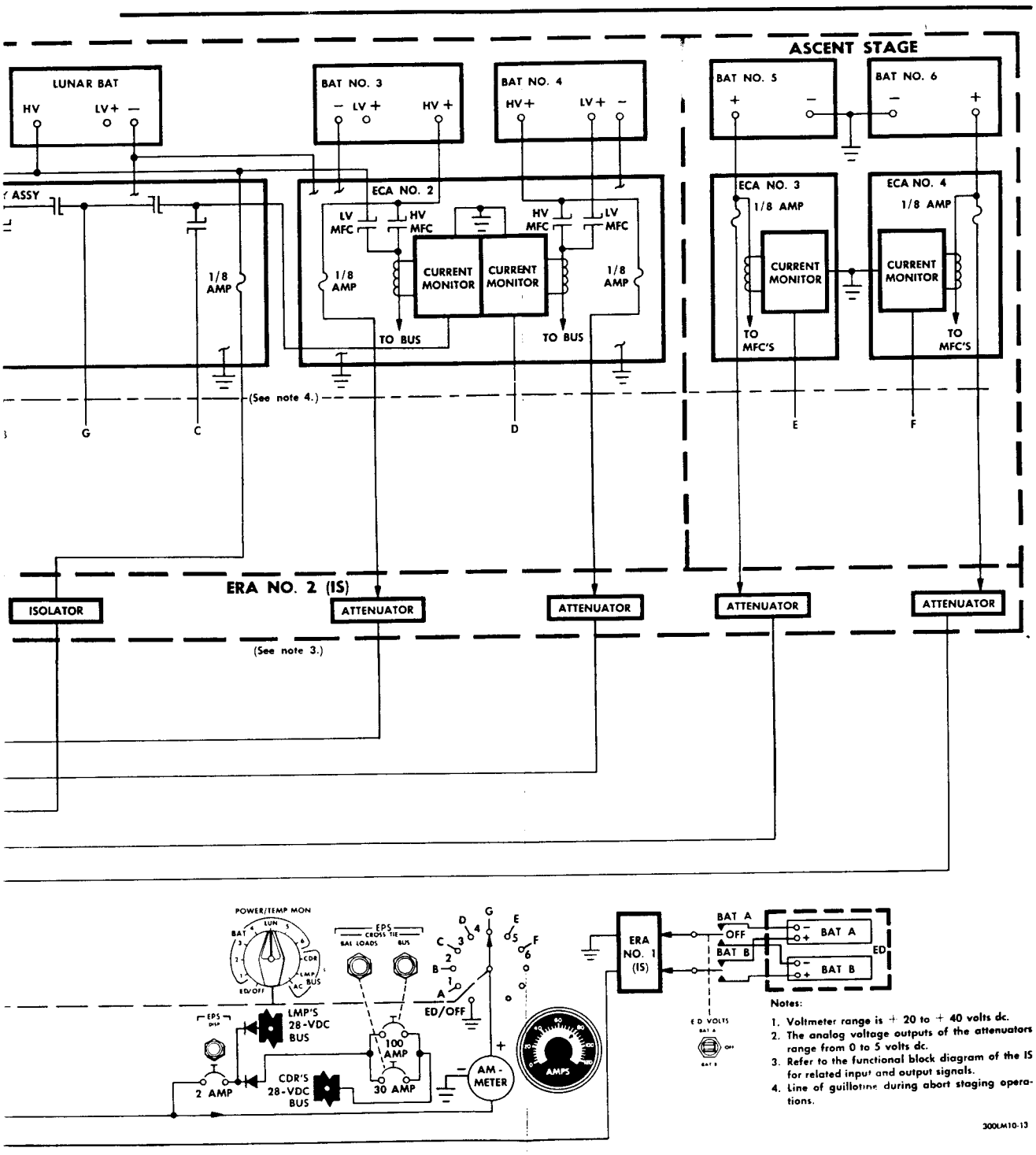

Figure 2.5-7. Battery Voltage- and Current-Monitoring Circuits - Simplified Diagram

EPS

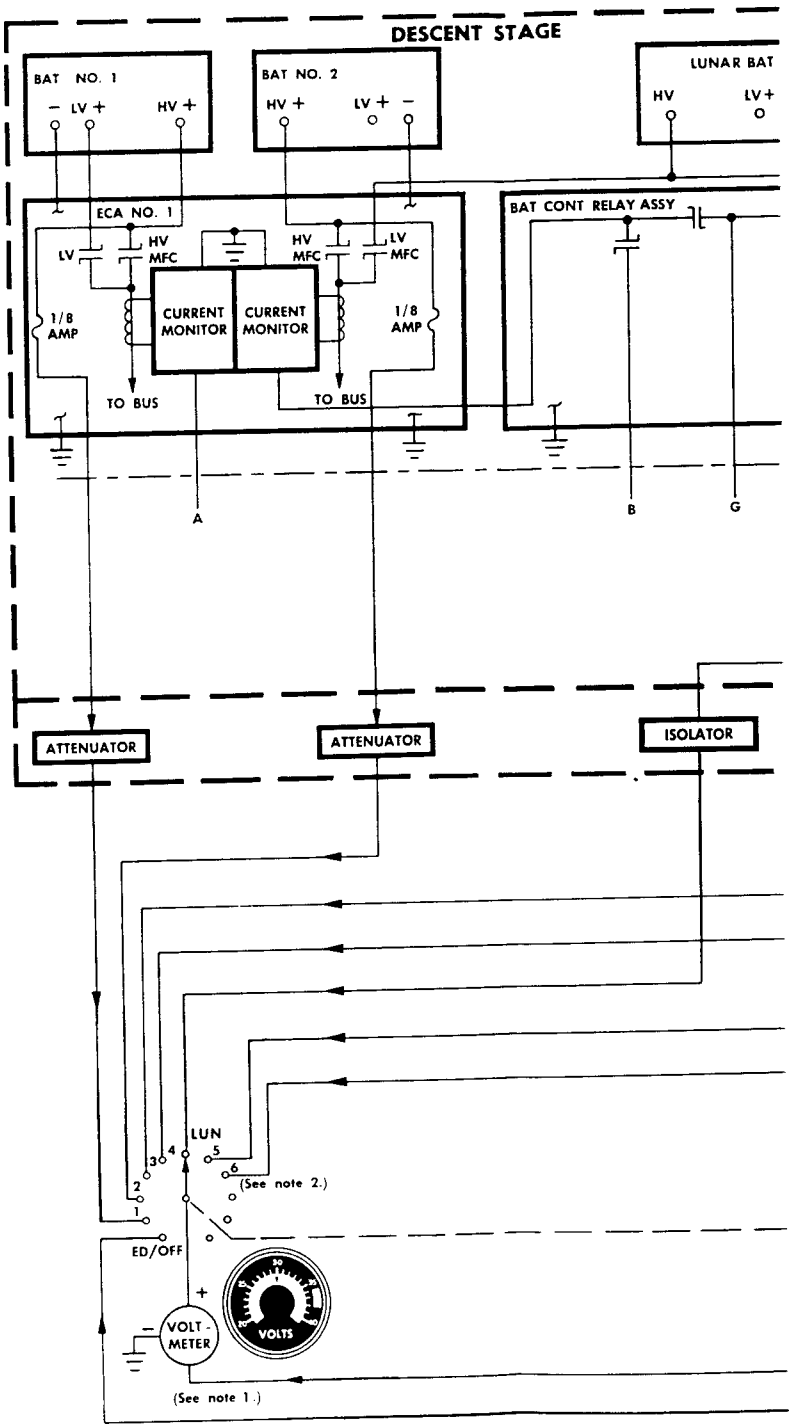
DESCENT STAGE
BAT NO. 1
− LV +
HV +
BAT NO. 2
HV +
LV + −
LUNAR BAT
HV
LV +
ECA NO. 1
LV
HV MFC
HV MFC
LV MFC
1/8 AMP
CURRENT MONITOR
CURRENT MONITOR
1/8 AMP
TO BUS
TO BUS
BAT CONT RELAY ASSY
A
B
G
ATTENUATOR
ATTENUATOR
ISOLATOR
LUN
1
2
3
4
5
6
(See note 2.)
ED/OFF
VOLT-METER
VOLTS
(See note 1.)

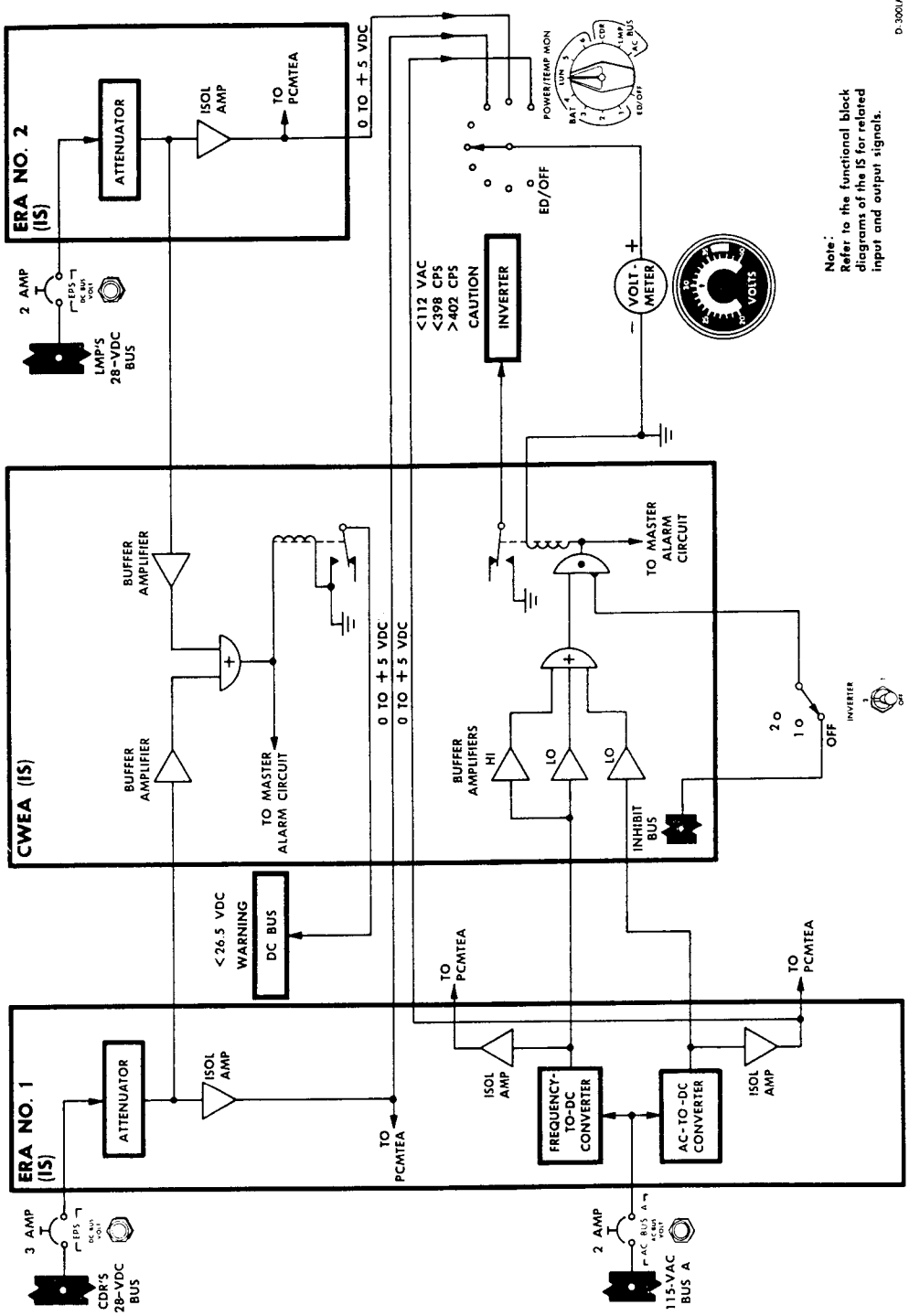

Figure 2.5-8. Primary Bus Voltage-Monitoring Circuits - Simplified Schematic Diagram

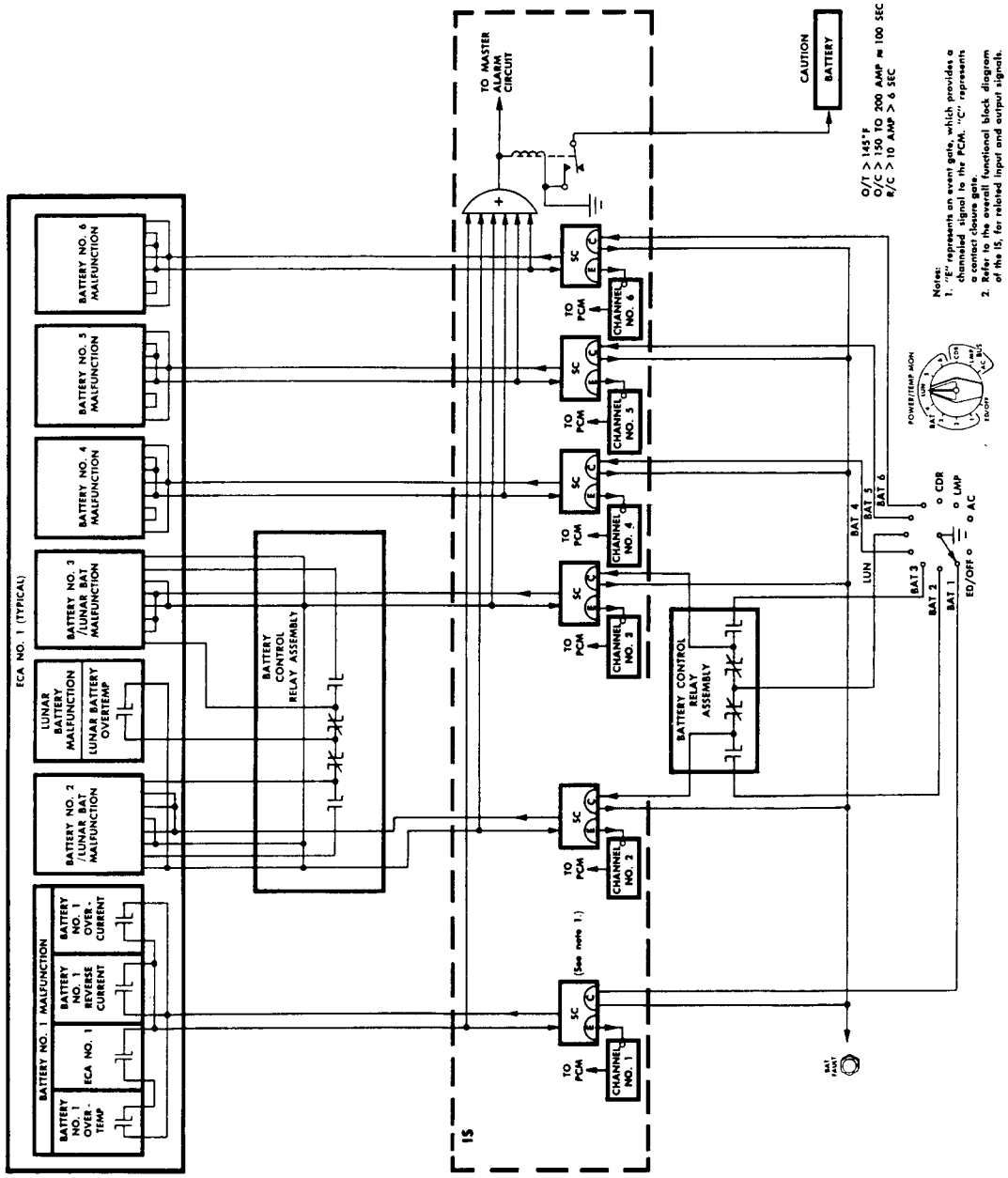

Figure 2.5-9. Malfunctioning-Battery Isolation Circuitry - Simplified Schematic Diagram

removed from its main power feeder line by momentarily setting the respective switch (panel 14) to OFF/RESET.

2.5.3.5 EPS Stages of Operation.

The EPS operates in seven basic stages, as follows:

- GSE-vehicle ground power supply (VGPS) to LM until T-7 hours (ac and dc)
- GSE-launch umbilical tower (LUT) power to LM from T-7 hours until T-30 minutes (dc only)
- Descent stage power from T-30 minutes through CSM rendezvous and docking (two descent batteries on low-voltage taps)
- Lunar orbit - CSM/LM power
- Descent stage power (two descent batteries manually switched to high-voltage taps and remaining descent batteries switched on)
- Ascent stage power (on normal main feeders)
- Staging (normal or abort)

EPS

2.5.3.5.1 GSE-Supplied Prelaunch Power. (See figure 2.5-10.)

Before earth launch, a-c and d-c power are supplied to the LM by the VGPS. An umbilical cable or a portable power supply is carried onboard the LM and connected to two GSE connectors, one under each center side console. At approximately T-7 hours, the VGPS power is replaced by LUT power. The SLA/LM assembly is now connected to the LUT by umbilical cable. LUT power is supplied to the LM Pilot's bus through the RJB. LUT remote control includes LUT deadface relay (LDR) set and reset commands, and LM high- and low-voltage off and low-voltage on signals. The LDR supplies power through the LM Pilot's main power feeders to the LM Pilot's d-c bus. D-C power is supplied to the Commander's bus through the EPS: CROSS TIE circuit breakers.

2.5.3.5.2 Descent Stage Power (Low-Voltage Taps).

At T-30 minutes, the LUT resets the LDR and connects the EPS descent battery low-voltage taps to the respective feeder lines. The descent batteries supply limited power to certain critical equipments from T-30 minutes until completion of CSM transposition and docking.

2.5.3.5.3 Lunar Orbit - CSM/LM Power. (See figure 2.5-11.)

On completion of CSM rendezvous and docking, an astronaut connects power and control umbilical cables from the LM to the CSM. The CSM deactivates LM power and then supplies power to the LM critical equipment, using the LM translunar negative bus. CSM/LM control logic prohibits CSM power to the LM power distribution system while the LM descent stage batteries are on the main power feeder lines. CSM/LM control logic is as follows:

- CSM deactivates LM power (low voltage off)
- CSM initiates CSM power to LM
- CSM deactivates CSM power to LM
- CSM initiates LM power on (low voltage on).

2.5.3.5.4 Descent Stage Power (High-Voltage Taps).

Batteries No. 1 and 4 have HI-V and LO-V switches, and talkbacks, on panel 14. Batteries No. 2 and 3 have only ON-OFF/RESET switches, and talkbacks. The lunar battery has an ON-OFF/RESET switch for the CDR and LMP bus, and a talkback that indicates which bus is selected.

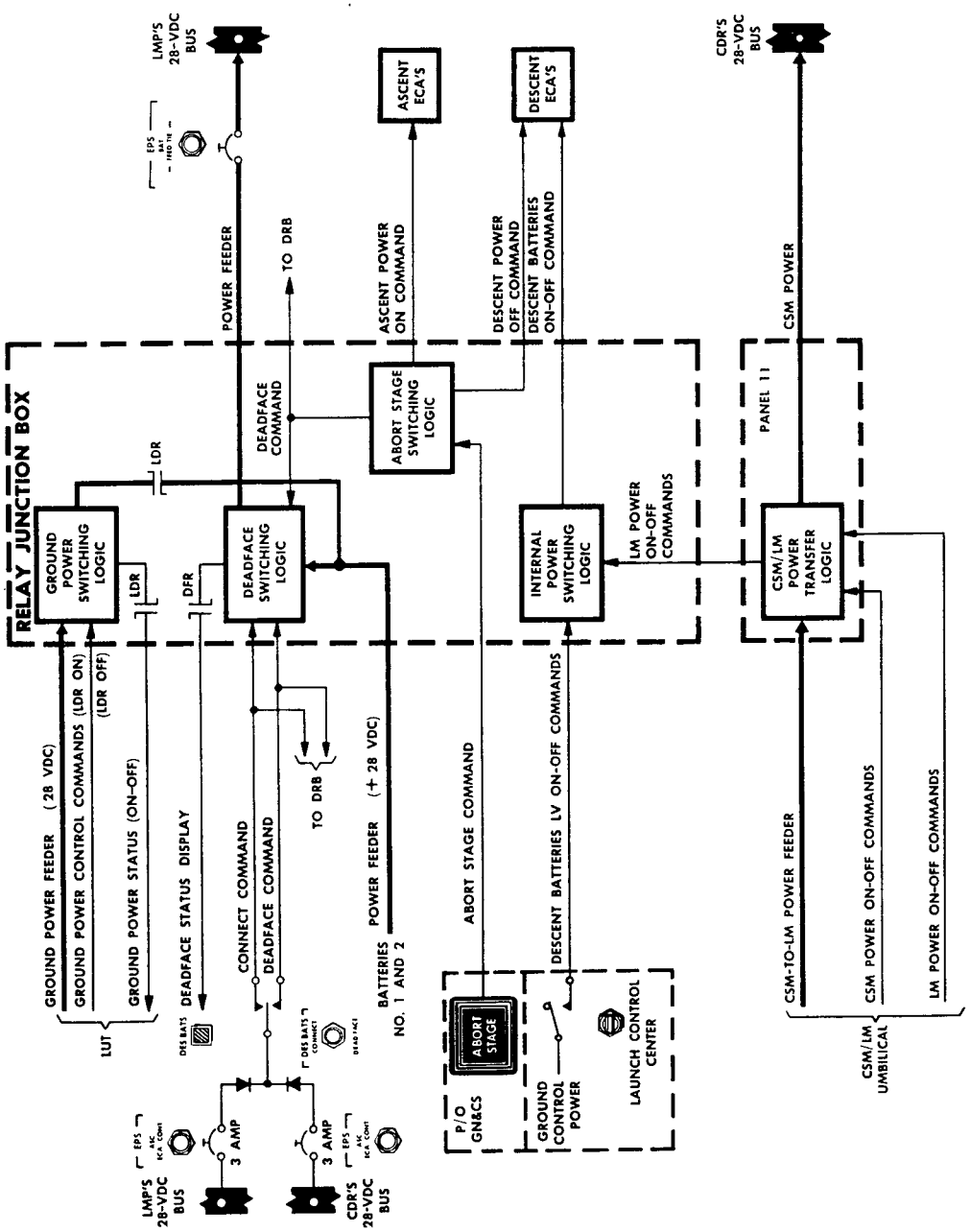

Figure 2.5-10. Relay Junction Box - Functional Block Diagram

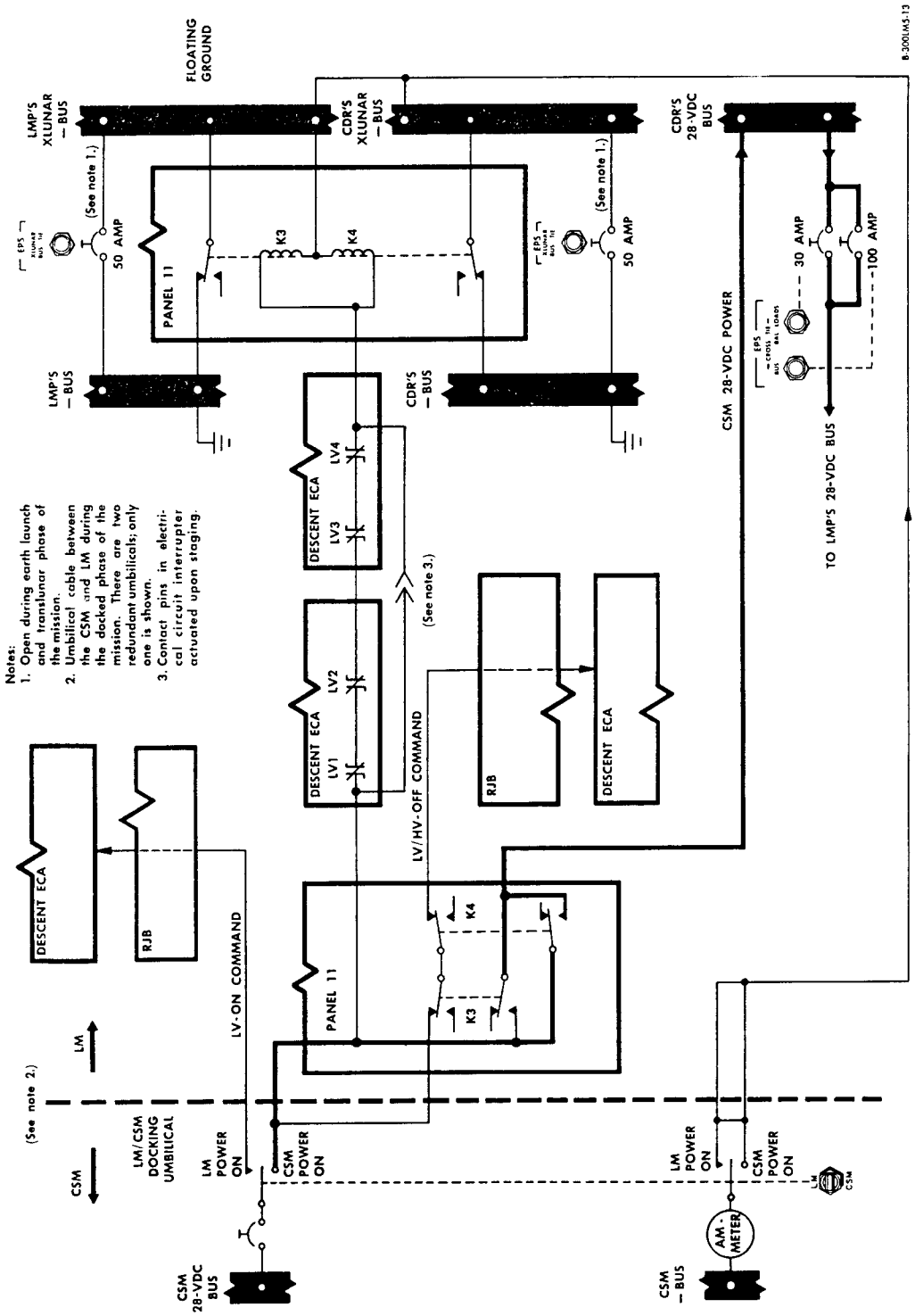

Figure 2.5-11. CSM/LM Primary Transfer Logic - Simplified Schematic Diagram

Descent stage battery low-voltage and off/reset control lines are routed through the RJB to the appropriate ECA; high-voltage control lines are routed directly to the respective ECA. Additional low-voltage and off/reset control is effected within the RJB through internal logic control signals. Descent battery No. 2 supplies electrical power to the LM Pilot's d-c bus via ECA No. 1 and the RJB. Descent batteries No. 3 and 4 supply the Commander's d-c bus via ECA No. 2 and the DRB.

2.5.3.5.5 Ascent Stage Power

Each of the two ascent batteries has a NORMAL and BACK UP feeder switch and related talkbacks on panel 14. Battery No. 5 normally supplies power to the LM Pilot's d-c bus via ECA No. 3. Battery No. 6 normally supplies power to the Commander's d-c bus via ECA No. 4.

2.5.3.5.6 Staging - Normal or Abort. (See figure 2.5-12.)

Before stage separation, the LM d-c bus loads are transferred from the descent stage batteries to the ascent stage batteries; d-c power to the bus power distribution system is maintained uninterrupted. Automatic transfer is initiated by pressing the ABORT STAGE pushbutton (panel 1); this applies 28 volts dc to the EPS abort stage relays in the RJB. These relays close the normal MFC's of each ascent ECA (if the ECA's have not been selected previously in the backup feed mode). After the ascent stage battery MFC's have placed the ascent stage batteries on the line, additional abort stage relay contacts supply an off/reset signal through the RJB, to each descent stage battery and to the deadface relays (DFR's). Transfer from descent stage battery power to ascent stage battery power can also be initiated manually. In manual transfer, the ascent batteries must be placed on the line before initiating transfer with the DES BATS switch (panel 14). This is accomplished by setting the ASCENT POWER switches (panel 14) to ON, setting appropriate DESCENT POWER switches (panel 14) to OFF/RESET, then setting the DES BATS switch to DEADFACE. Auxiliary DFR contacts in the RJB and DRB provide direct control of the DES BATS talkback for monitoring the deadface operation.

2.5.4 MAJOR COMPONENT/FUNCTIONAL DESCRIPTION.

2.5.4.1 Descent Stage Batteries.

The descent batteries include the lunar battery, which is identical with descent batteries No. 1 through 4. The low-voltage tap is used only on batteries No. 1 and 4.

Each battery is composed of silver-zinc plates, with a potassium hydroxide electrolyte. Each battery has 20 cells, weighs 135 pounds, and has a 415-ampere-hour capacity (approximately 25 amperes at 28 volts dc for 16 hours, at +80° F) when discharged in accordance with the nominal power profile of the mission. The batteries can operate in a vacuum while cooled by an ECS cold-rail assembly to which the battery heat sink surface is mounted. If one descent stage battery fails, the remaining descent stage batteries can provide sufficient power for a curtailed mission. Five thermal sensors monitor cell temperature limits (+145° ±5° F) within each battery; they cause the BATTERY caution light to go on to alert the astronaut to a battery overtemperature condition. The batteries initially have high-voltage characteristics; a low-voltage tap is provided (at the 17th cell) for use from T-30 minutes through transposition and docking. The high-voltage tap is used for all other normal LM operations. (Manual switchover from low to high voltage usually occurs when the battery has discharged to approximately 90% of capacity, less than 27 volts d-c bus voltage.) Normally, the battery high- or low-voltage outputs are connected to the main feeder lines, using the DESCENT POWER switches, but electrical contactor switching is ultimately performed in the battery's respective ECA. Normally, the descent stage batteries are paralleled so that all batteries discharge evenly. See figure 2.5-4 for a functional block diagram of descent stage battery power distribution. The terminal voltages of a descent battery are as follows:

Nominal voltage - 30.0 volts dc

Minimum voltage during 40-ampere discharge - 28.0 volts dc

Maximum voltage (under load) - 32.5 volts dc

2.5.4.2 Ascent Stage Batteries.

The two ascent stage batteries (No. 5 and 6) are identical. Each battery is composed of silver-zinc plates, with a potassium hydroxide electrolyte. Each battery weighs 125 pounds, and has a 296-ampere-hour capacity (50 amperes at 28 volts dc for 5.92 hours, at +80° F) when discharged in

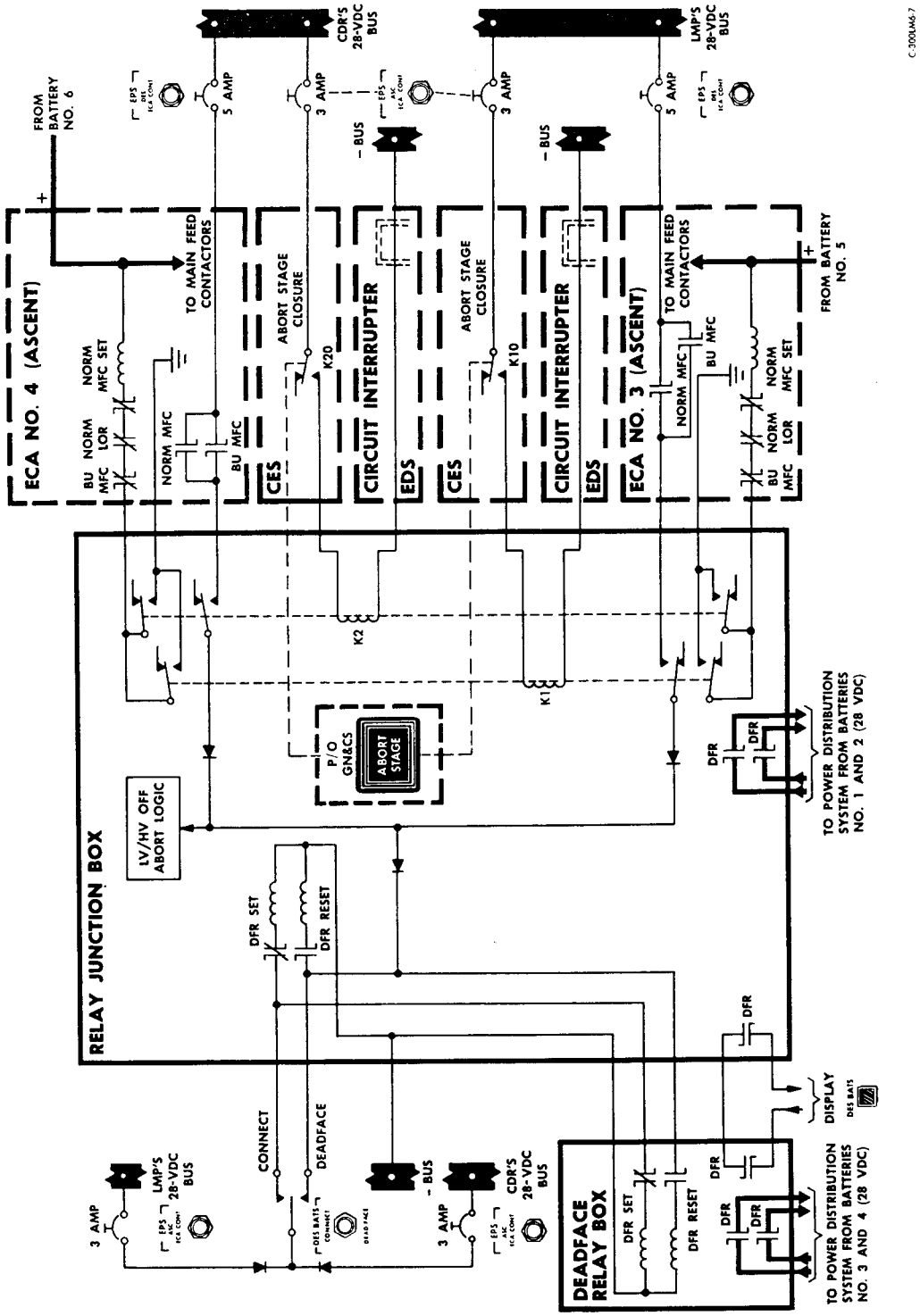

Figure 2.5-12. Deadface Relay and Staging Logic - Simplified Schematic Diagram

accordance with the nominal power profile of the mission. The batteries can operated in a vacuum while cooled by ECS cold rails to which the battery heat sink surface is mounted. The nominal operating temperature of the ascent stage batteries is approximately +80° F. Battery temperature in excess of +145° ±5° F closes a thermal sensor, causing the BATTERY caution light to go on. (The light does not go on if the ascent battery normal MFC is open.) The astronaut then takes corrective action to eliminate the faulty battery. Two ascent stage batteries ordinarily supply the d-c power requirement, from normal staging to final docking of the ascent stage with the orbiting CSM or during any malfunction that requires separation of the ascent and descent stages. However, if one ascent stage battery fails, the remaining battery provides sufficient power to accomplish safe rendezvous and docking with the CSM during any part of the mission.

The ascent batteries do not have low-voltage taps; inherent high-voltage characteristics are eliminated because the batteries operate with sufficient loading to bring the batteries to the proper partial discharge voltage. Normally, the ascent stage batteries are paralleled to ensure that both batteries discharge evenly. See figure 2.5-5 for a functional block diagram of ascent stage battery power distribution. The terminal voltages of an ascent stage battery are as follows:

Nominal voltage - 30.0 volts dc

Minimum voltage (with two ascent batteries) - 28.0 volts dc

Minimum voltage (with one ascent battery, abort - 27.5 volts dc

Maximum voltage (under load) - 32.5 volts dc

2.5.4.3 Descent Stage Electrical Control Assemblies. (See figure 2.5-13.)

The two descent stage ECA's protect and control the descent stage batteries. Each ECA has control circuits for each battery accommodated.

In ECA No. 1, one set of control circuits (HV and LV) is used for battery No. 1, one control circuit (HV) is used for battery No. 2, and one control circuit (LV) is used for the lunar battery. In ECA No. 2, one set of control circuits (HV and LV) is used for battery No. 4, one control circuit (HV) is used for battery No. 3, and one control circuit (LV) is used for the lunar battery.

A failure in one set of battery control circuits does not affect the other set. The primary function of the ECA is to connect the related batteries or one battery to the associated main feeder line through the LV or HV MFC's. The protective circuits of the ECA automatically disconnect a descent stage battery if an overcurrent condition exists, and cause the BATTERY caution light to go on if a battery overcurrent, reverse-current, or overtemperature condition is detected.

Analogs of battery voltage and current (monitored constantly in the ECA) are routed to the IS to provide indications on the VOLTS and AMPS indicators. Battery talkbacks (low voltage, high voltage, and off) receive drive signals derived from ECA-supplied discrete levels processed through the IS. The major elements in the descent stage ECA's are LV and HV MFC's, current monitors, overcurrent relays, reverse-current relays, and power supplies. An auxiliary relay supplies system logic contact closures to other control assemblies in the LM power distribution system.

The MFC's are electrically interlocked to prevent closing an HV contactor when an LV contactor is already closed, and vice versa. This prevents short-circuiting the tapped sections of the respective descent stage battery, this also prevents putting the lunar battery on its associated bus when the associated HV contactor is already closed, and vice versa. The MFC's are operated by the DESCENT POWER ON-OFF/RESET switches.

The ECA current monitor produces isolated outputs for the IS, overcurrent relay, and reverse-current relay from the battery current that flows through the HV or LV MFC's. The current monitor supplies a d-c level (proportional to battery current) to the overcurrent relay. Voltage in the relay circuit builds up until the close coil of the overcurrent relay is energized (reflecting 150 to 200 amperes for approximately 13 to 100 seconds), at which time the HV or LV contactor opens to disconnect the battery from its power feeder. The magnitude of battery current is inversely proportional to the time it takes for the close coil of the relay to be energized; the greater the initial overcurrent, the less time required for tripping. The overcurrent relay is sensitive to magnitude; it therefore follows the overcurrent trip characteristics. The relay must be reset manually (with the ON-OFF/RESET switches), once it is tripped. A lockout relay (LOR) ensures that the battery cannot be turned on unless the

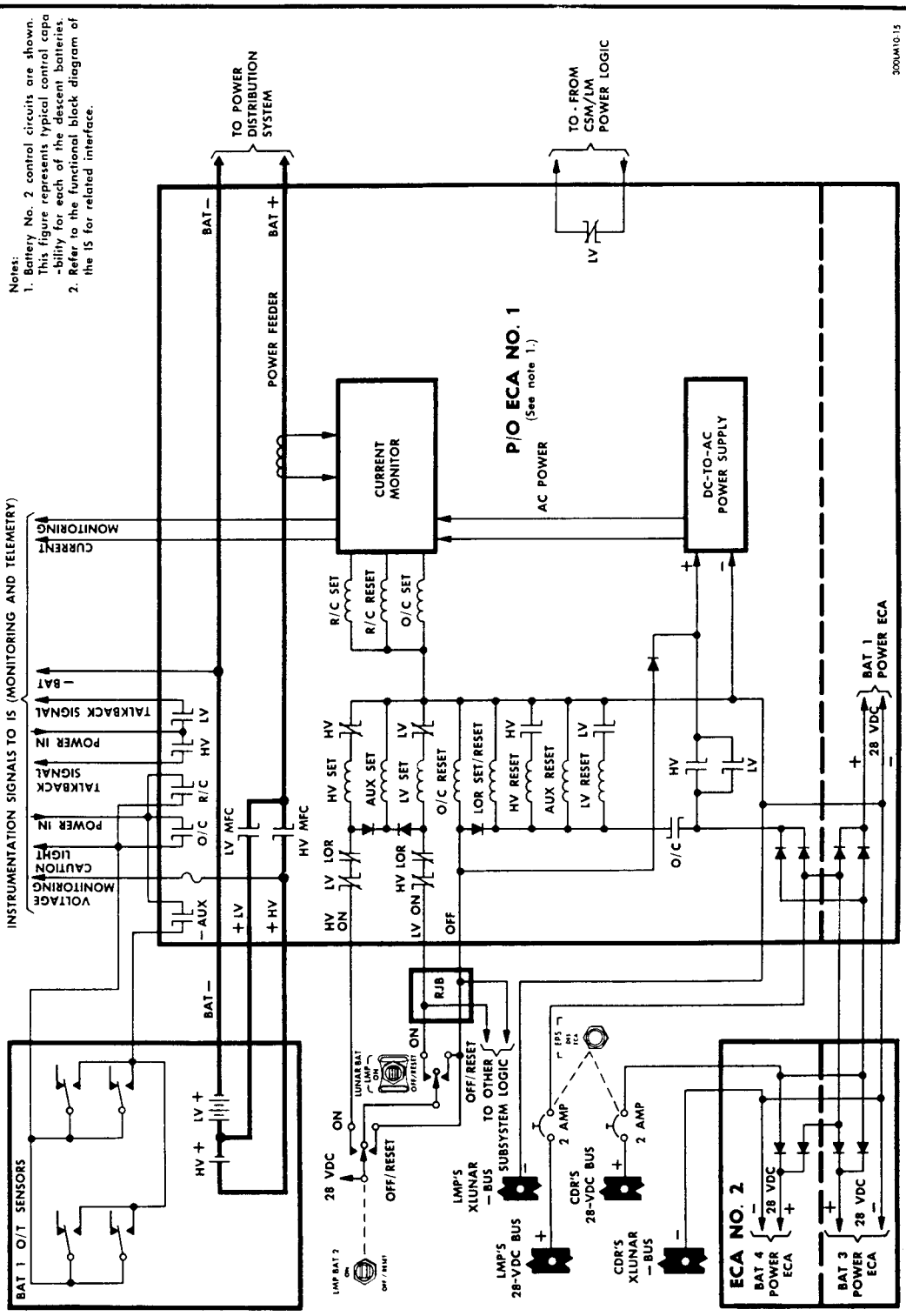

Figure 2.5-13. Descent Stage Electrical Control Assembly - Simplified Schematic Diagram

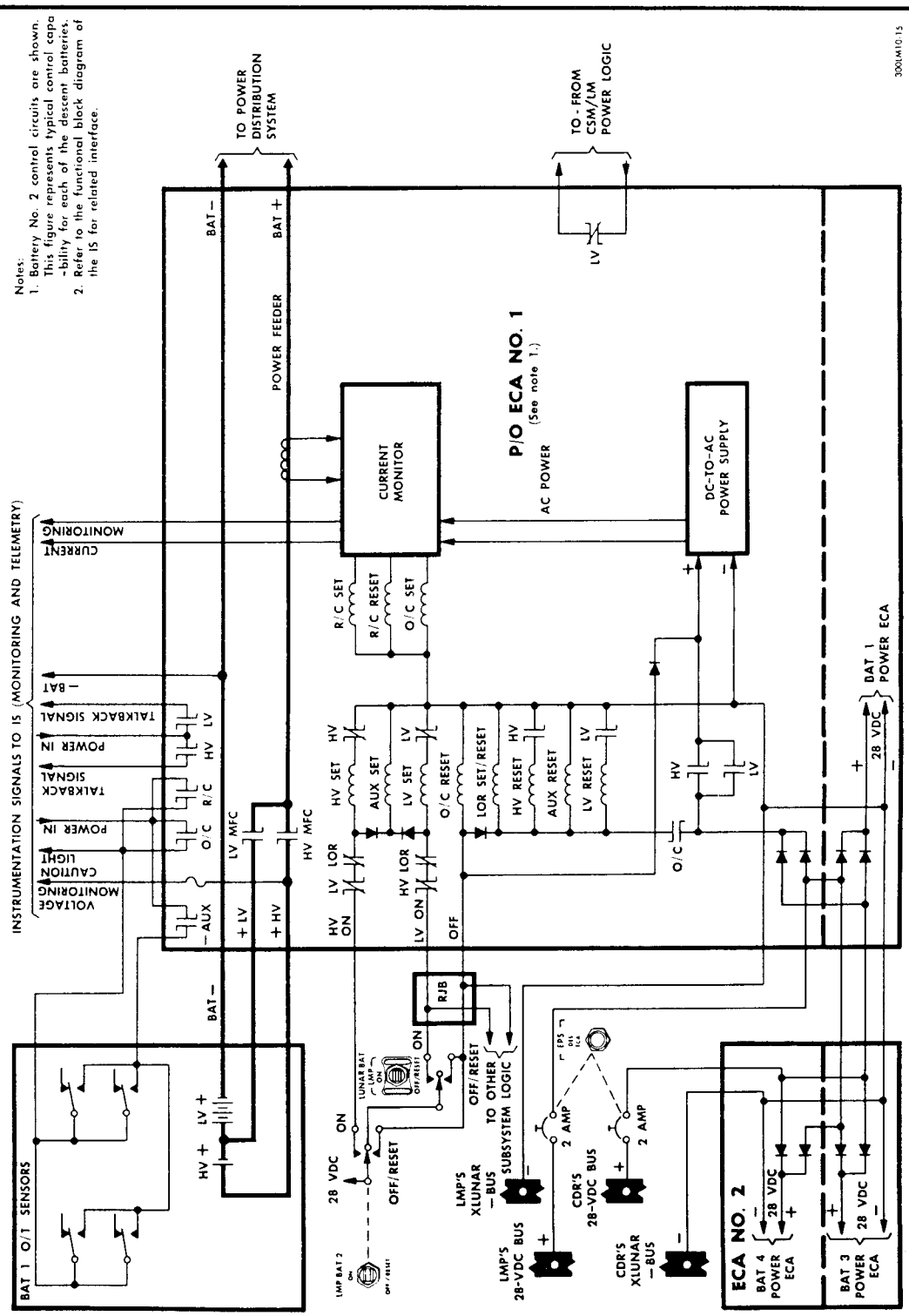

Figure 2.5-13. Descent Stage Electrical Control Assembly - Simplified Schematic Diagram

EPS

Notes:
1. Except for fuses F39 and F40 in assembly 4A9, which are rated at 0.5 ampere, all fuses are rated at 0.25 ampere.
2. Spare fuses, not shown, are provided in assemblies 4A9 and 4A10.

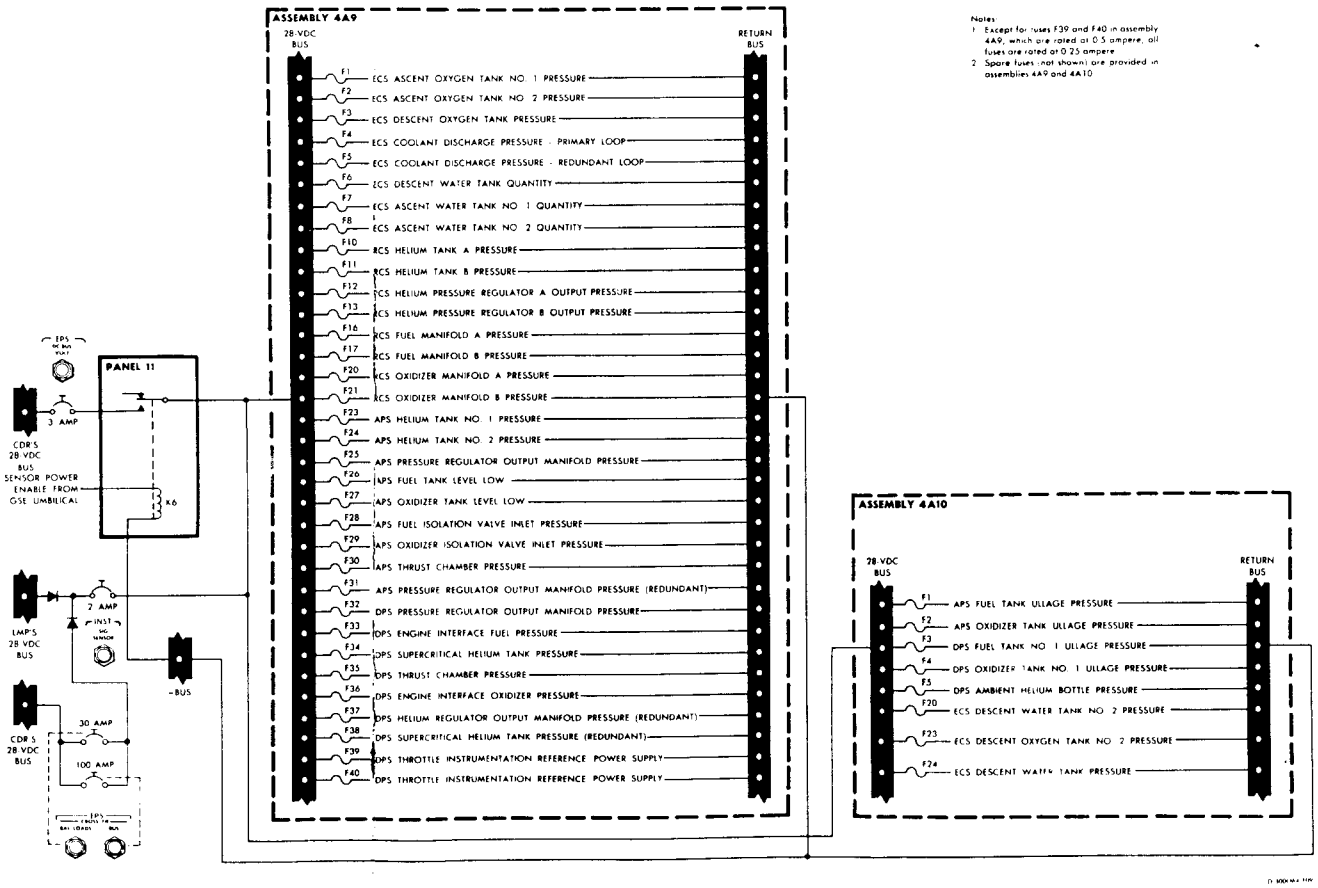

Figure 2.5-16. Sensor Power Fuse Assemblies - Simplified Power Distribution Diagram

overcurrent relay has been reset. For each overcurrent circuit, the ECA provides an alarm signal to the caution and warning circuits in the IS, causing the BATTERY caution light to go on.

The reverse-current relay causes the BATTERY caution light to go on when current flow in the direction opposite to normal current flow exceeds 10 amperes for at least 4 seconds. Unlike the overcurrent relay, the reverse-current relay does not open the related MFC's and is self-resetting when the current monitor ceases to detect a reverse-current condition. During reverse-current conditions, the related MFC must be switched open manually by setting the DESCENT POWER switches to OFF/RESET. The descent stage ECA power supplies provide ac for current-monitor excitation, and regulated dc for the other ECA circuits.

2.5.4.4 Battery Control Relay Assembly.

The battery control relay assembly adapts the lunar battery to the descent electrical control assemblies. It inhibits battery overtemperature monitoring when the lunar battery is not in use, switches current monitor signals and malfunction indications to the appropriate monitors, and inhibits simultaneous application of lunar battery voltage to the LMP and CDR buses. It also provides a fused circuit and conditioning for lunar battery voltage measurements.

2.5.4.5 Ascent Stage Electrical Control Assemblies. (See figure 2.5-14.)

The two ascent stage ECA's individually control and protect the two ascent stage batteries in nearly the same manner as the descent stage ECA's control and protect the descent stage batteries. Each ascent stage ECA contains electrical power feeder contactors, an overcurrent relay, a reverse-current relay, and a current monitor. Each ascent stage battery can be connected to its normal or backup main feeder line via the normal MFC or the backup main feed contactor (BU MFC) in its respective ECA. Both batteries are thereby connected to the primary d-c power buses. The normal feeder line has overcurrent protection; the backup feeder line does not. Otherwise, the ascent stage ECA's function the same as the descent stage ECA's. The ascent stage ECA's provide reverse-current monitoring, overcurrent protection, and contact closures for indicators. The MFC's and BU MFC's in the ascent stage ECA's are manually operated with the respective ASCENT POWER switches.

2.5.4.6 Relay Junction Box. (See figure 2.5-10.)

The RJB provides the following:

- Control logic and junction points for connecting external prelaunch power (via the LUT) to the LM Pilot's d-c bus
- Control and power junction points for connecting descent stage and ascent stage ECA's to the LM Pilot's bus
- Deadfacing of half of the power feeders between the descent and ascent stages.

The RJB provides control of all LV contactors (on and off) from the LUT and CSM, and control of all low- and high-voltage descent power contactors (off) on receipt of an abort stage command. On and off control of ground facility power through the LUT is provided by the LDR. The RJB includes abort logic relays, which, when energized by an abort stage command, close the ascent stage battery MFC's and open the deadface relays. The RJB deadface relays provide on and off control of the main power feeder of descent batteries No. 1 and 2 and, for LM 10 and subsequent, the lunar battery. These relays are opened and closed with the DES BATS switch, or are opened automatically when the abort logic relays close. The deadface relays in the RJB deadface half of the main power feeders between the descent and ascent stages; the other half of the power feeders is deadfaced by the deadface relays in the DRB. The ascent stage then provides primary d-c power to the LM.

2.5.4.7 Deadface Relay Box. (See figure 2.5-12.)

The DRB contains a deadface relay, which controls the output of descent stage batteries No. 3 and 4 and the lunar battery in the same manner as the RJB deadface relay controls descent stage batteries No. 1 and 2 and the lunar battery. Because the Commander's and LM Pilot's circuit breaker panels are located on opposite sides of the LM cabin, two individual deadfacing facilities (one for each circuit breaker panel) provide a physically expedient deadfacing process.

2.5.4.8 Inverters. (See figure 2.5-15.)

Two redundant 400-cps inverters individually supply the primary a-c power required in the LM. Inverter output is controlled by application of 28 volts dc from the Commander's or LM Pilot's

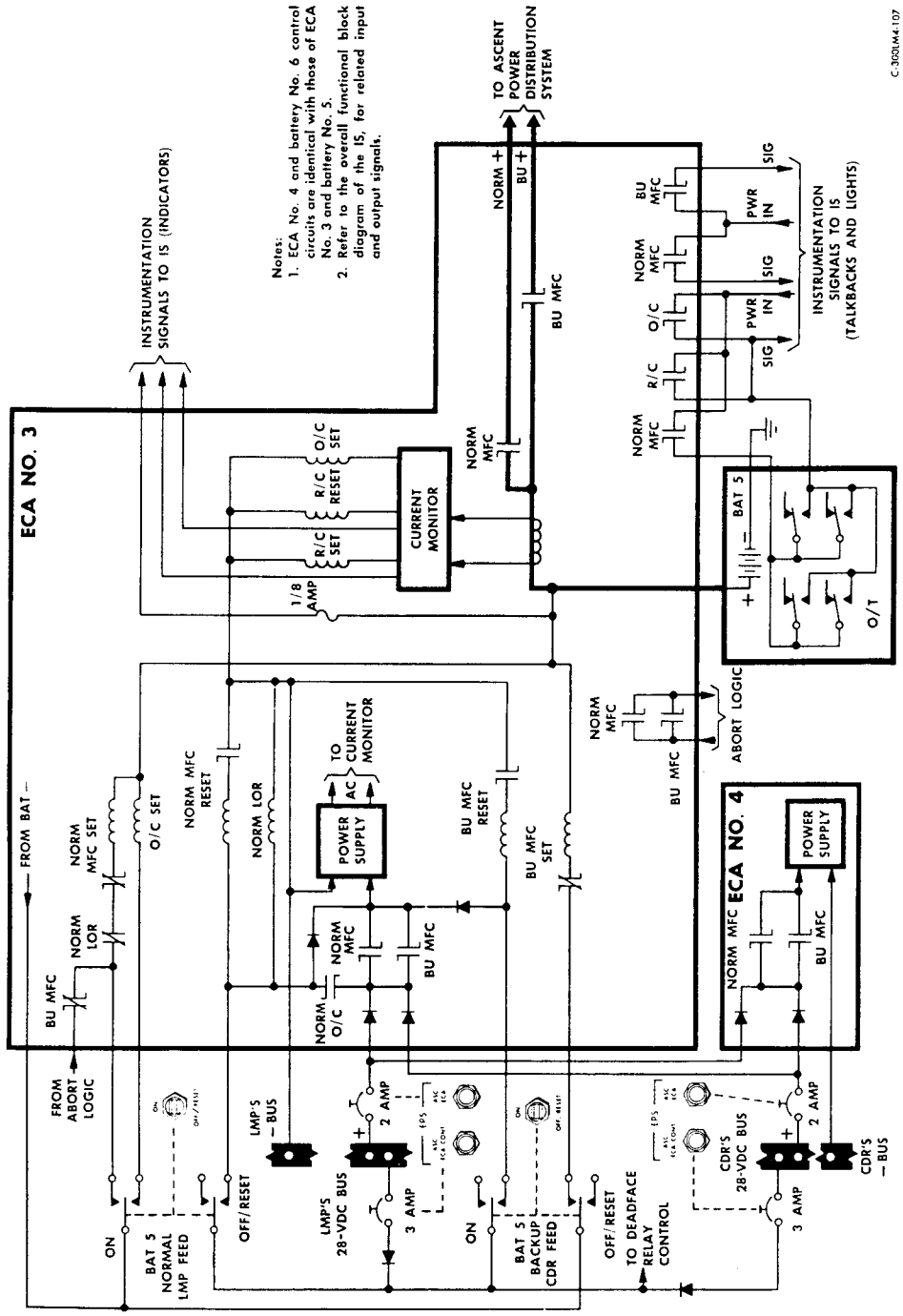

Figure 2.5-14. Ascent Stage Electrical Control Assembly - Simplified Schematic Diagram

EPS

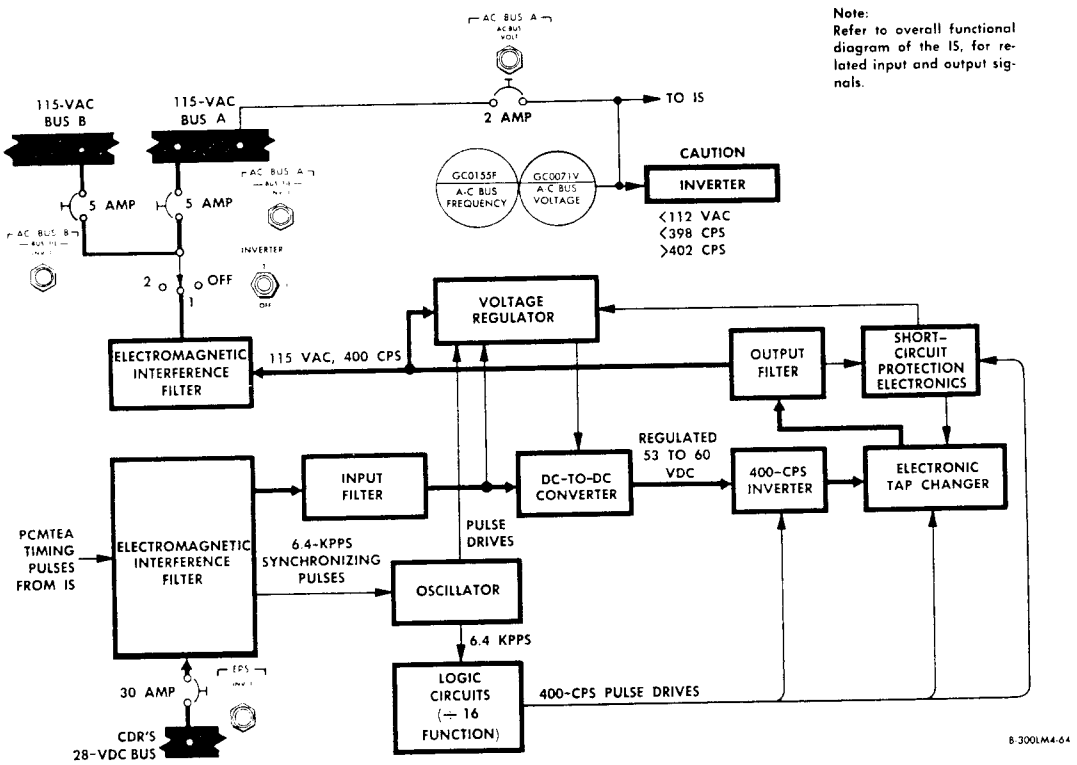

Figure 2.5-15. Inverter No. 1 - Block Diagram

28-volt d-c bus through the EPS: INV 1 and INV 2 circuit breakers, the INVERTER switch, and the AC BUS A and AC BUS B: BUS TIE circuit breakers. The inverters are identical; therefore, only the inverter No. 1 circuitry is discussed. The 28 volts dc is applied through an electromagnetic interference (EMI) filter and an input filter to a dc-to-dc converter. The regulated output of the converter is changed to a 400-cps square wave in the inverter stage. The output of the inverter stage is controlled by 400-cps pulse drives developed from a 6.4-kilopulse-per-second (kpps) oscillator, which is, in turn, synchronized by timing pulses from the IS. The output of the inverter stage is 400±0.4 cps, synchronized; 400±10 cps, with a free-running oscillator. The 6.4-kpps oscillator output is divided precisely by 16 in the divider logic circuit and routed to the inverter stage, the electronic tap changer, and short-circuit protection circuits. The electronic tap changer sequentially selects the output of the tapped transformer in the inverter stage, converting the 400-cps square wave to an approximate sine wave of the same frequency. The output filter minimizes harmonic distortion. The voltage regulator maintains the inverter output at 115 volts ac ±1% during normal load conditions by controlling the amplitude of the dc-to-dc converter output. The voltage regulator also compensates for variations in the d-c input and a-c output load.

Setting the INVERTER switch to 1 routes the inverter No. 1 output to the AC BUS A: BUS TIE INV 1 circuit breaker for a-c bus A application and to the AC BUS B: BUS TIE INV 1 circuit breaker for a-c bus B application. A-C power at bus A is monitored for proper voltage amplitude and frequency by the IS via the AC BUS A: AC BUS VOLT circuit breaker (panel 11). When the voltage at bus A is less than 112 volts ac, or the frequency is less than 398 cps or more than 402 cps, the INVERTER caution light goes on. The light goes off when the malfunction is remedied.

2.5.4.9 Circuit Breaker and EPS Control Panels.

All primary a-c and d-c power feed circuits are protected by appropriately rated circuit breakers on the Commander's and LM Pilot's buses. The two d-c buses are electrically connected by the

main power feeder network. Functionally redundant LM equipment is placed on both d-c buses (one on each bus), so that each bus can individually perform a mission abort during emergencies. EPS circuit controls and monitoring displays are on panel 14. Section 3 contains a description of all EPS controls and displays. Circuit breaker characteristics are given in table 2.5-1.

Table 2.5-1. Circuit Breaker Characteristics

D-C circuit breaker	
Operating voltage	28 volts
Operating voltage limit	32.5 volts
Transient voltage limits	50 volts above, 100 volts below, operating voltage
Ripple voltage	Less than 1.5 volts, peak
A-C circuit breaker	
Steady-state operating voltage	115±2.5 volts rms
Transient voltage limits	90 to 188 volts, peak
Transient voltage recovery time	170 milliseconds

EPS

2.5.4.10 Sensor Power Fuse Assemblies. (See figure 2.5-16.)

Two sensor power fuse assemblies, in the aft equipment bay, provide a secondary d-c bus system that supplies excitation to ECS, RCS, and MPS transducers that develop display and telemetry data. During prelaunch procedures, the INST: SIG SENSOR circuit breaker (panel 16) is open, and primary power is supplied to the assemblies from the Commander's 28-volt d-c bus, via the EPS: DC BUS VOLT circuit breaker (panel 11) and the closed contacts of relay K6 in panel 11. The coil of K6 is energized by the ground-supplied GSE umbilical cable. Before launch, the GSE umbilical is disconnected and K6 is deenergized. Closing the INST: SIG SENSOR circuit breaker supplies power directly to the sensor power fuse assemblies from the LM Pilot's 28-volt d-c bus. With this circuit breaker closed, closing the EPS: CROSS TIE circuit breaker(s) on panel 11 supplies redundant power from the Commander's 28-volt dc bus. Each assembly comprises a positive d-c bus, negative return bus, and 40 fuses. All sensor return lines are routed to a common ground bus.

2.5.5 PERFORMANCE AND DESIGN DATA.

The performance and design data for the EPS are given in table 2.5-2.

Table 2.5-2. Electrical Power Subsystem - Performance and Design Data

A-C section	
Inverter input voltage	24 to 32 volts dc
Inverter output (with PCMTEA sync)	115±1.2 volts rms, 400±0.4 cps, single phase
Inverter output (with internal sync)	115±1.2 volts rms, 400±10 cps, single phase
Normal load range	0 to 350 volt-amperes (at power factors 0.65 lagging to 0.80 leading)
Maximum overload at constant voltage output	525 volt-amperes for 10 minutes

Table 2.5-2. Electrical Power Subsystem - Performance and Design Data (cont)

D-C section	
Steady-state bus voltage limits	26.5 to 32.5 volts dc
Nominal supply bus voltage	28 volts dc
Transient voltages	50 volts above or below nominal supply voltage
Power requirements	
Ascent ECA's	84 watts, momentarily during battery switching; 10 watts, steady-state
Descent ECA's	84 watts, momentarily during battery switching; 20 watts, steady-state
EPS displays	2 watts

2.5.6 OPERATIONAL LIMITATIONS AND RESTRICTIONS.

The operational limitations and restrictions for the EPS are as follows:

- When EPS batteries are in use, the primary glycol cooling loop (ECS) must be operating. If this restriction is not observed, EPS components will be damaged. The only deviation to this is at low power levels (200 watts or less); then batteries can operate for 8 hours without cooling.
- When supplying power, temperature must be maintained between +29° and +100° F. If this restriction is exceeded, battery could be damaged or voltage output could go out of specification (less than 26.5 volts dc).
- Maximum continuous inverter power output must not exceed 350 volt-amperes. Demand can go to 525 volt-amperes for up to 10 minutes. If this limitation is exceeded, inverter components could be damaged.
- Maximum CSM power to the LM during docked coast phases in approximately 296 watts peak (average is approximately 108 watts). If this restriction is exceeded, circuit breakers in the CSM will trip, shutting off power to the LM.
- Available ascent electrical energy is 17.8 kilowatt-hours at maximum steady-state current drain of 50 amperes per battery, at 28 volts dc.
- Available descent electrical energy is 58.6 kilowatt-hours maximum at steady-state current drain of 25 amperes per battery, at 28 volts dc.
- During descent engine burns, the corresponding descent and ascent stage batteries (by supplied bus) must be paralleled to preclude a low bus voltage due to descent battery failure.

- Both EPS: CROSS TIE circuit breakers on panel 16 must be opened during descent engine burns. If this restriction is not observed, a short on one bus will affect the other bus.
- The EPS: CROSS TIE BAL LOADS circuit breaker on panel 11 must be closed at all times. If this restriction is not observed, redundant power to the Instrumentation Subsystem and EPS displays will not be available.
- Maximum current drain on one ascent battery during ascent engine burns (abort condition) is 104 amperes. At higher current drains, the d-c bus voltage may drop below the low operating limit.
- Inverter output voltage must never drop below 110 volts ac; otherwise, the descent engine control assembly (DECA) may become inoperative.

2.6 ENVIRONMENTAL CONTROL SUBSYSTEM

2.6.1 INTRODUCTION

The Environmental Control Subsystem (ECS) provides a habitable environment for two astronauts while the LM is separated from the CSM, and permits the astronauts to decompress and repressurize the cabin in accordance with mission requirements. It also controls the temperature of electronic equipment and provides water for drinking, cooling, fire extinguishing, and food preparation.

The major portion of the ECS is in the cabin. Part of the equipment-cooling loop and two oxygen tanks are in the aft equipment bay. Two water tanks are in the upper midsection, two larger oxygen tanks and two larger water tanks are in the descent stage. (See figures 2.6-1 and 2.6-2.) Power for the ECS is supplied from the Electrical Power Subsystem. (See figures 2.6-3 and 2.6-5.) The ECS (figure 2.6-4) comprises an atmosphere revitalization section (ARS), an oxygen supply and cabin pressure control section (OSCPCS), a water management section (WMS), a heat transport section (HTS), and provisions for supplying oxygen and water to the portable life support system (PLSS).

2.6.1.1 Atmosphere Revitalization Section.

The ARS consists of a suit circuit assembly, suit liquid cooling assembly, and steam flex duct leading to a vent. The suit circuit assembly is a closed-loop recirculation system that cools and ventilates the pressure garment assemblies (PGA's); maintains a desirable level of carbon dioxide in the atmosphere; removes odors, particles, noxious gases, and excessive moisture; enables control of the temperature of oxygen flow to the PGA's; and, if required, automatically isolates the PGA's from the system. The suit liquid cooling assembly circulates water and controls its temperature in the liquid-cooled garment, circulates cabin air, when required, and removes lunar dust from the cabin during ascent from the lunar surface. The steam flex duct carries steam discharged from the suit circuit water sublimator, when operating, to ambient vacuum.

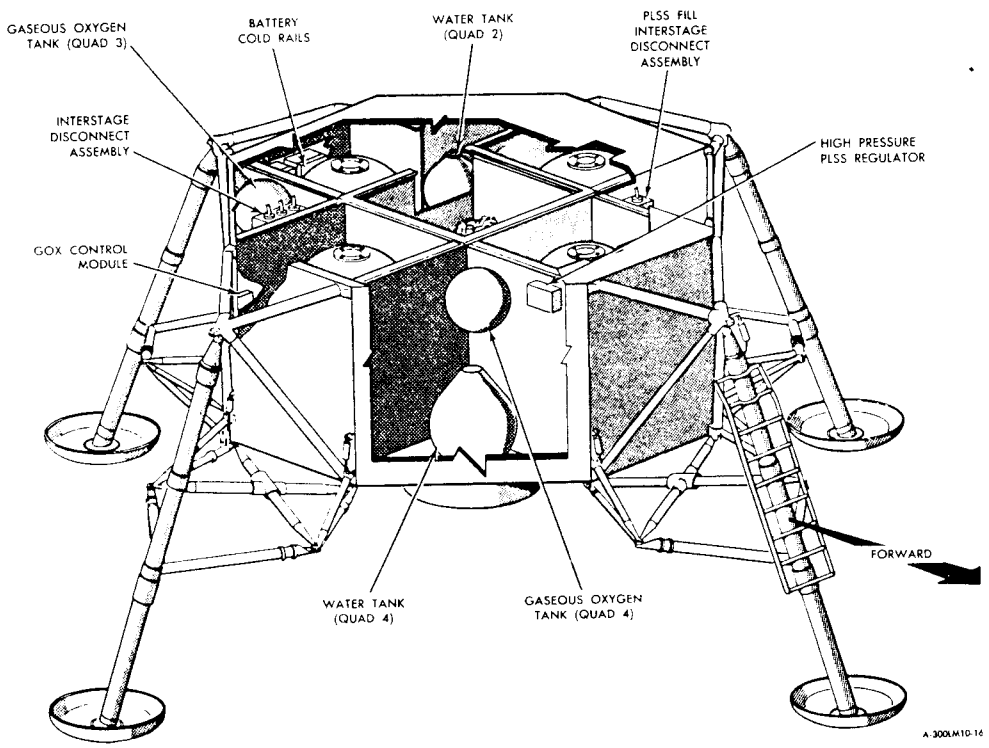

Figure 2.6-1. Environmental Control Subsystem - Component Location (Sheet 1 of 3)

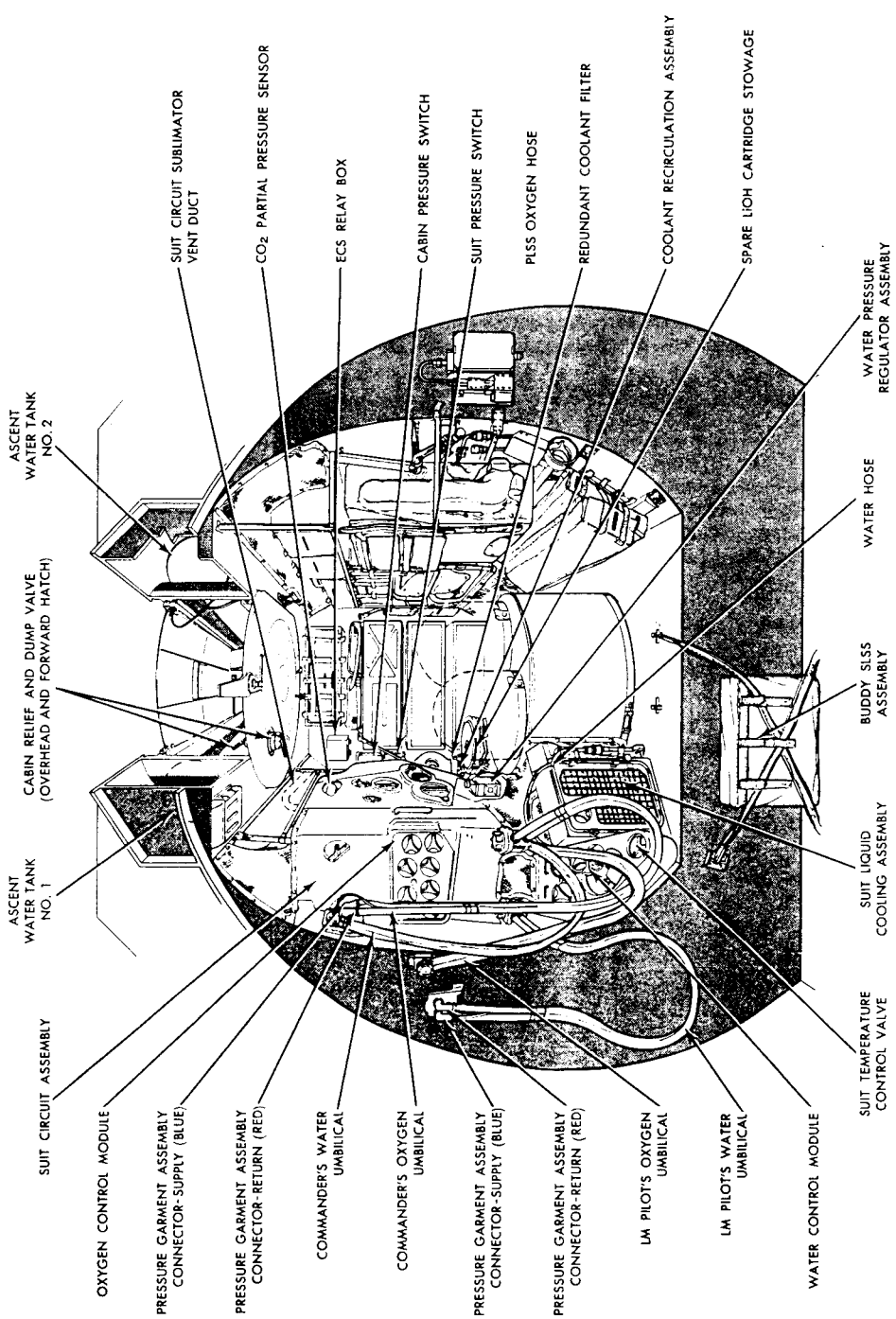

Figure 2.6-1. Environmental Control Subsystem - Component Location (Sheet 2 of 3)

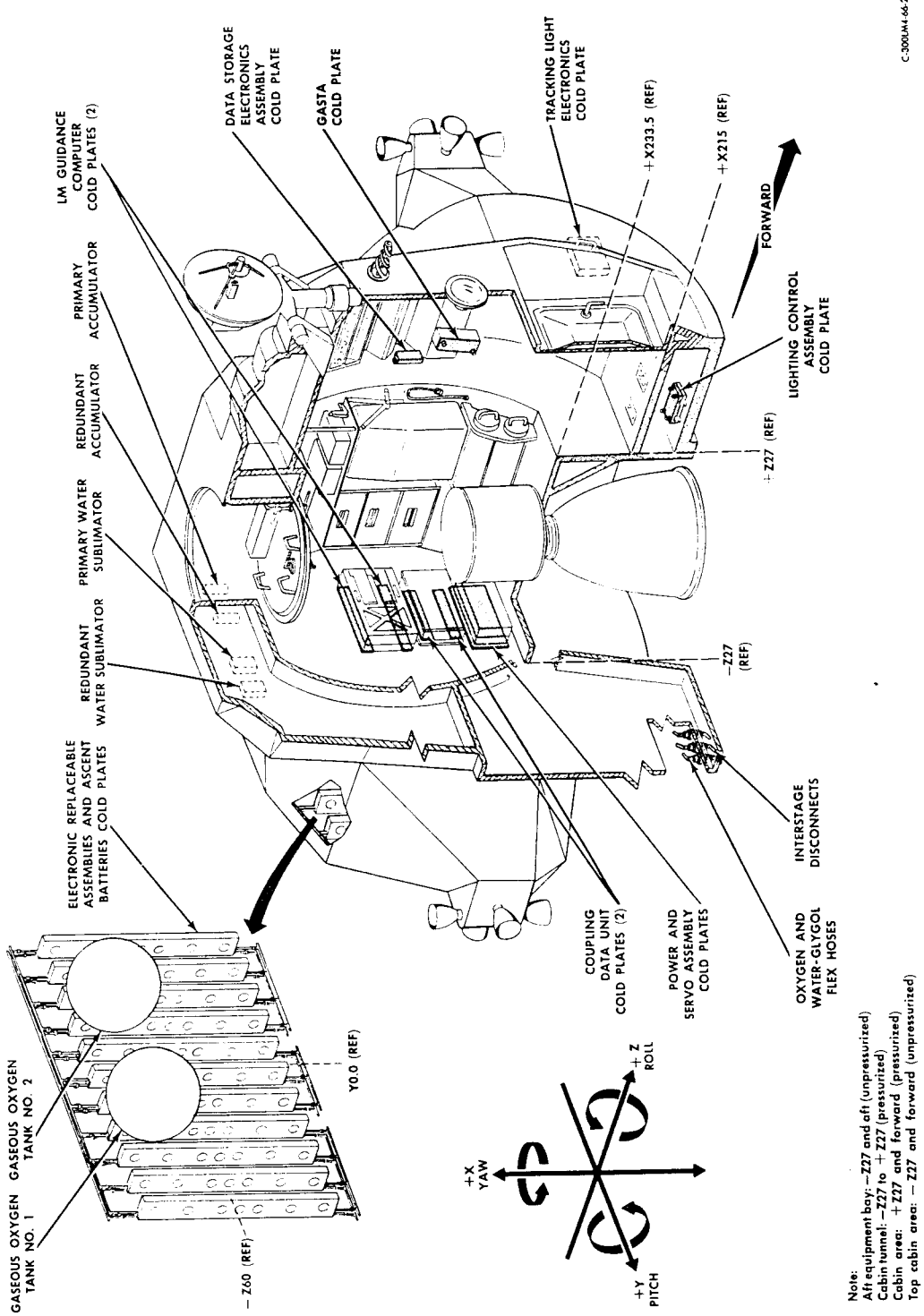

Note:
Aft equipment bay: −Z27 and aft (unpressurized)
Cabin tunnel: −Z27 to +Z27 (pressurized)
Cabin area: +Z27 and forward (pressurized)
Top cabin area: −Z27 and forward (unpressurized)

Figure 2.6-1. Environmental Control Subsystem - Component Location (Sheet 3 of 3)

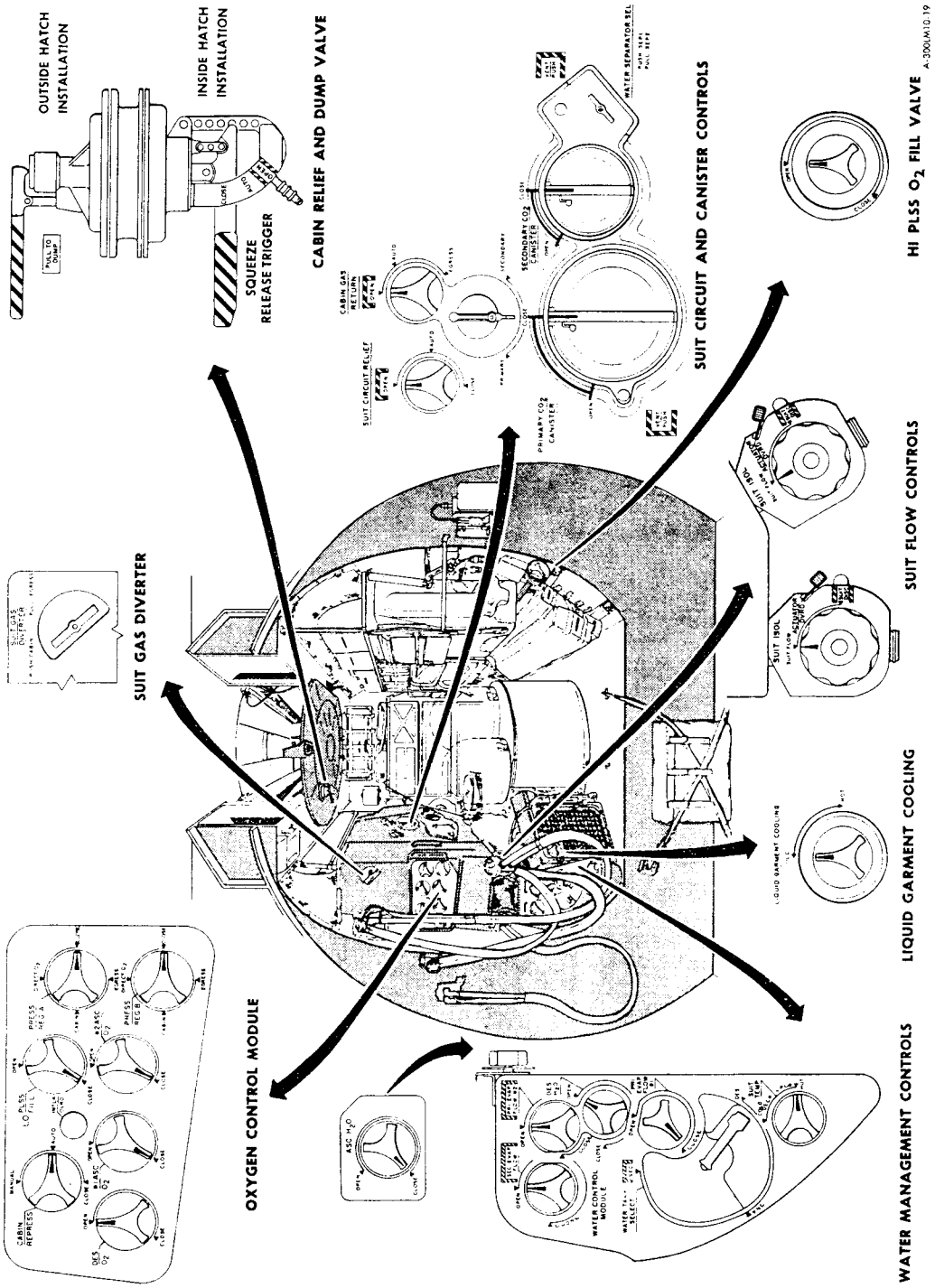

Figure 2.6-2. Environmental Control Subsystem - Controls

Oxygen circulation is maintained by centrifugal fans. Heating and cooling are accomplished by passing the oxygen through heat exchangers, where heat is either surrendered to, or picked up from, the coolant of the HTS. Water separators remove excess moisture after the cooling phase.

2.6.1.2 Oxygen Supply and Cabin Pressure Control Section.

The OSCPCS stores gaseous oxygen and maintains cabin and suit pressure by supplying oxygen to the ARS. This replenishes losses due to crew metabolic consumption and cabin or suit leakage. There are four oxygen supplies: two, in the descent stage, provide oxygen during the descent and lunar-stay phases of the mission; two, in the ascent stage, during the ascent and rendezvous phases of the mission.

2.6.1.3 Water Management Section.

The WMS supplies water for drinking, cooling, fire fighting, food preparation, and for refilling the PLSS cooling water tank. It also provides for delivery of water from ARS water separators to HTS sublimators and from the water tanks to ARS and HTS sublimators.

The water tanks are pressurized before launch, to maintain the required pumping pressure in the tanks. The two descent stage tanks supply most of the water required until staging occurs. After staging, water is supplied by the two ascent stage tanks.

Pressure-regulated water from the tanks, along with ARS water, is delivered to the HTS sublimators via manually controlled shutoff valves. A manual disconnect and shutoff valves are provided for control and use of ascent and descent tank water for drinking, food preparation, fire extinguishing, and PLSS refills.

2.6.1.4 Heat Transport Section.

The HTS consists of a primary coolant loop and a secondary coolant loop. The secondary loop serves as a backup loop and functions in the event that the primary loop fails. A water-glycol solution circulates through each loop. The primary loop provides temperature control for batteries, electronic equipment that requires active thermal control, and for the water that circulates through the LCG and the oxygen that circulates through the cabin and PGS's. The batteries and electronic equipment are mounted on cold plates and rails through which coolant is routed to remove waste heat.

The cold plates used for equipment that is required for mission abort contain two separate coolant passages; one for the primary loop and one for the secondary loop. The secondary coolant loop, which is used only if the primary loop is inoperative, serves only these cold plates.

In-flight waste heat rejection from both coolant loops is achieved by the primary and secondary sublimators, which are vented overboard. A coolant pump recirculation assembly contains all the HTS coolant pumps and associated check and relief valves. Coolant flow from the assembly is directed through parallel circuits to the cold plates for the electronic equipment, the oxygen-to-glycol heat exchangers, and the water-to-glycol heat exchanger in the ARS.

2.6.2 SUBSYSTEM INTERFACES.

An absolute pressure transducer in each descent oxygen tank feed line generates an output proportional to tank pressure. The output is routed to the Instrumentation Subsystem (IS), where it is conditioned to provide a telemetry signal, a caution indication, and through the O_2/H_2O QTY MON selector switch (panel 2), a display on the O_2 QUANTITY indicator. When descent tank 1 pressure drops below 135 psia (approximately 5% of capacity), a signal is routed to the O_2 QTY caution light. Momentarily setting the O_2/H_2O QTY MON selector switch to C/W RESET extinguishes the light.

A pressure transducer in the fill line of each ascent oxygen tank generates an output that is also conditioned in the IS to provide a telemetry signal, a caution indication, and a display on the O_2 QUANTITY indicator. The quantity of oxygen remaining in the tanks is read on the indicator by setting the selector switch to ASC 1 or ASC 2, as applicable. The O_2 QTY caution light goes on if, before staging, the pressure in either ascent oxygen tank is less than 684 psia (less-than-full condition). After staging, the signal that causes this indication is inhibited; instead, the light goes on when pressure in ascent tank No. 1 is less than 100 psia. The caution light is extinguished by setting the selector switch to C/W RESET.

2.6.3 FUNCTIONAL DESCRIPTION.

The functional description of each of the four major ECS sections is supported by a functional flow diagram which, to reduce complexity, does not contain electrical circuitry, Figure 2.6-5 shows all ECS electrical circuits and all ECS interfaces with the Electrical Power Subsystem (EPS) and IS.

2.6.3.1 Atmosphere Revitalization Section. (See figure 2.6-6.)

The ARS is a recirculation system that conditions oxygen by cooling or heating, and dehumidifying and deodorizing it for use within the PGS's and cabin; it also circulates water through the liquid-cooled garment to provide cooling during peak heat loads; during ascent from the lunar surface, it removes dust from the cabin atmosphere. The major portion of the ARS is within the suit circuit assembly.

In normal operation the SUIT ISOL valve is set to SUIT FLOW and conditioned oxygen flows to the PGS's and is discharged through the return umbilical to the suit circuit. Suit circuit pressure, sensed at a point downstream of the suits, is referenced to the oxygen regulators that control pressure by supplying makeup oxygen to the suit circuit. The suit circuit relief valve protects the suit circuit against overpressurization, by venting to cabin ambient.

The CABIN position of the SUIT GAS DIVERTER valve is used during pressurized-cabin operation, to divert sufficient conditioned oxygen to the cabin to control carbon dioxide and humidity levels. Pulling the valve handle selects the EGRESS position to isolate the suit circuit from the cabin. The EGRESS position is used for all unpressurized cabin operations as well as closed suit mode with pressurized cabin. An electrical solenoid override automatically repositions the valve from CABIN to EGRESS when cabin pressure drops below the normal level or when the PRESS REG A or PRESS REG B valve is set to EGRESS.

With the SUIT GAS DIVERTER valve set to CABIN, cabin discharge oxygen is returned to the suit circuit through the CABIN GAS RETURN valve. Setting the CABIN GAS RETURN valve to AUTO enables cabin pressure to open the valve. When the cabin is depressurized, differential pressure closes the valve, preventing suit pressure loss.

A small amount of oxygen is tapped from the suit circuit upstream of the PGA inlets and fed to the carbon dioxide partial pressure sensor, which provides a voltage to the PART PRESS CO_2 indicator (panel 2).

The primary and secondary carbon dioxide (CO_2) and odor removal canisters are connected to form a parallel loop. The primary conister contains a LM-size cartridge; the secondary canister, a PLSS-size cartridge. A debris trap in the primary canister cover prevents particulate matter from entering the cartridge. A relief valve in the primary canister permits flow to bypass the debris trap if it becomes clogged. Oxygen is routed to the CO_2 and odor removal canisters through the CO_2 CANISTER SEL valve. The carbon dioxide level is controlled by passing the flow across a bed of lithium hydroxide (LiOH); odors are removed by absorption in activated charcoal. When carbon dioxide partial pressure reaches or exceeds 7.6 mm Hg, as indicated on the PART PRESS CO_2 indicator, the CO_2 component caution light and ECS caution light go on. The CO_2 CANISTER SEL valve is then set to SEC, placing the secondary canister onstream. This unlocks the cover on the PRIM CO_2 CANISTER. The PRIM CO_2 CANISTER VENT pushbutton is pushed to release pressure from the canister before the canister cover is removed. The primary cartridge is replaced, the canister cover is installed, and the CO_2 CANISTER SEL valve is set to PRIM, placing the primary canister back onstream. The ECS caution light is extinguished by the lowering of the carbon dioxide partial pressure below 7.6 mm Hg. The CO_2 component caution light is on when the CO_2 level is above 7.6 mm Hg or CO_2 CANISTER SEL valve is in the SEC position. A flow limiter in the primary cartridge makes the flow resistance equivalent to a secondary cartridge and maintains suit circuit oxygen flowrates compatible with the water seperator requirements. The flow limiter is removable in flight should additional oxygen flow be desired.

From the canisters, conditioned oxygen flows to the suit fan assembly, which maintains circulation in the suit circuit. Only one fan operates at a time. The ECS: SUIT FAN 1 circuit breaker is closed and the SUIT FAN selector switch is set to 1 to initiate suit fan operation. At startup, a fan differential pressure sensor is in the low position (low P), which, through the fan condition signal control, energizes the ECS caution light and SUIT FAN component caution light. The lights remain on until the differential pressure across the operating fan increases sufficiently to cause the differential pressure sensor to move to the normal position. If the differential pressure drops to 6.0 inches of water or less,

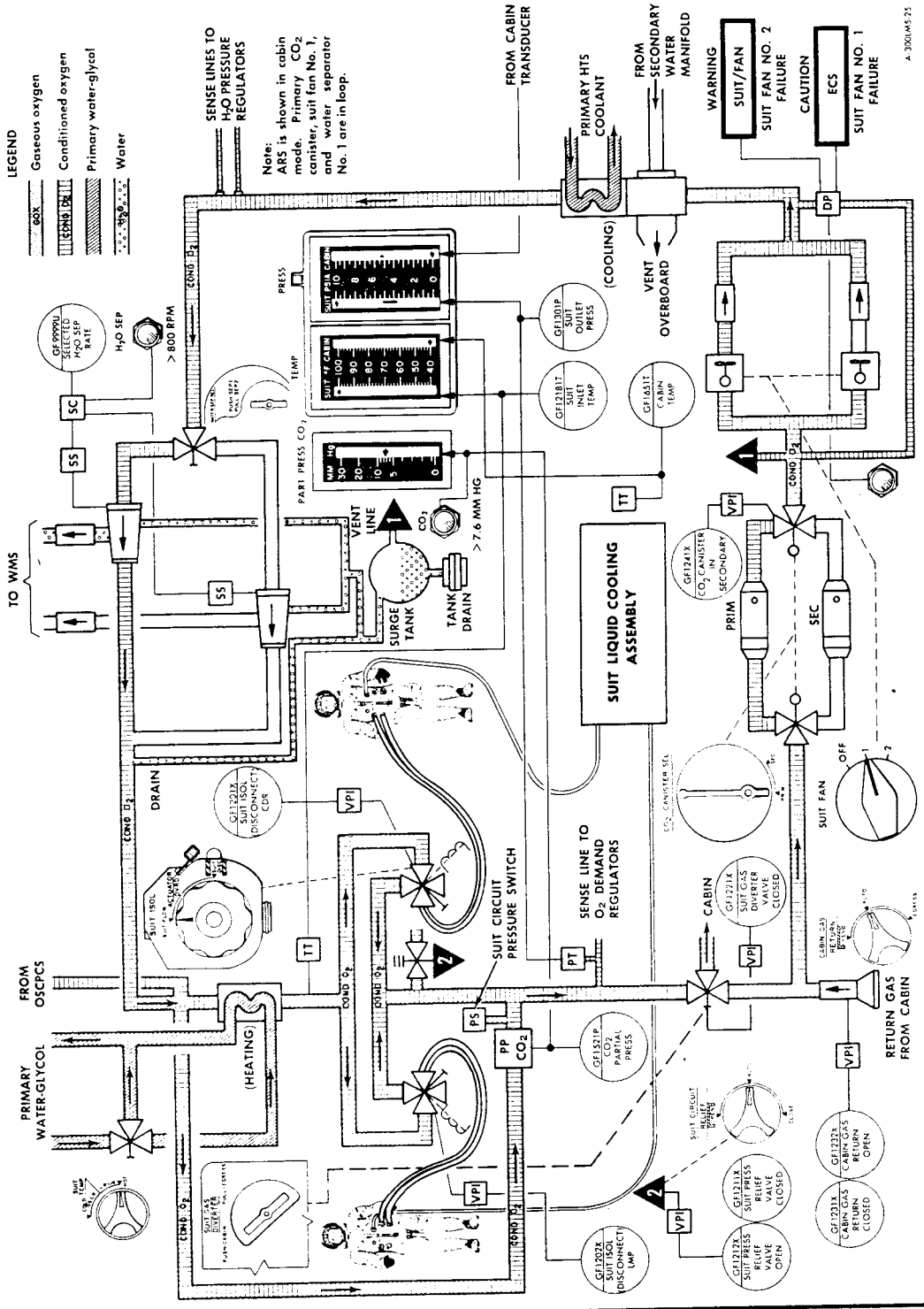

Figure 2.6-6. Atmosphere Revitalization Section - Simplified Functional Flow Diagram

the lights go on and switchover to fan No. 2 is required. The ECS caution light goes off when No. 2 fan is selected and the SUIT/FAN warning light goes on. The SUIT FAN component caution light goes off when fan No. 2 comes up to speed and builds up normal differential pressure. The SUIT/FAN warning and SUIT FAN component caution lights go off when fan No. 2 differential pressure reaches 9.0 inches of water. The fan check valve permits air to pass from the operating fan without backflow through the inoperative fan.

From the check valve, the conditioned oxygen passes through a sublimator to the cooling heat exchanger. The sublimator cools the oxygen under emergency conditions. Normally, the sublimator is inoperative; it is placed in operation when the secondary evaporator flow (SEC EVAP FLOW) valve of the water control module is opened because a failure in the primary heat transport loop renders the cooling heat exchanger inoperative. Heat transfer to the coolant in the heat exchanger reduces gas temperature and causes some condensation of water vapor.

The conditioned oxygen is next routed to two, parallel-redundant water separators through the water separator selector (WATER SEP SEL) valve. One separator, selected by pushing (SEP 1) or pulling (SEP 2) the WATER SEP SEL valve handle, is operated at a time. The separator is driven by the gas flowing through it. Moisture removed from the oxygen is discharged under a dynamic head of pressure sufficient to ensure positive flow from the separator to the WMS. A water drain carries some water from the separators to a surge (collection) tank outside the recirculation system.

The conditioned oxygen from the water separator is mixed with makeup oxygen from the OSCPCS to maintain system pressure. The mixture flows through the regenerative (heating) heat exchanger, where the temperature may be increased, to the SUIT ISOL valves. The SUIT TEMP valve on the water control module controls the flow of coolant through the regenerative heat exchanger. Setting the valve to INCR HOT increases oxygen temperature; setting it to DECR COLD reduces the temperature.

If a PGA tears while the SUIT ISOL valves are set to SUIT FLOW, the valves are automatically repositioned to SUIT DISC when suit circuit pressure drops to 2.9 psia minimum (they can close between 2.9 and 3.4 psia), actuated by the suit circuit pressure switch. This action isolates the PGA's from the ARS. At the same time, the CABIN REPRESS valve automatically opens, repressurizing the cabin, if the CABIN REPRESS circuit breaker is closed.

2.6.3.1.1 Suit Liquid Cooling Assembly. (See figure 2.6-6A.)

The suit liquid cooling assembly assists in removing metabolic heat by circulating cool water through the liquid-cooled garment (LCG). A pump maintains the flow of warm water returning from the LCG through the water umbilical hoses. An accumulator in the assembly compensates for system volumetric changes and leakage. A mixing bypass valve controls the quantity of water that flows through the water-glycol heat exchanger for removal of heat; the remaining water is bypassed around the heat exchanger. This bypassed (warm) water, mixed with the cool water downstream of the heat exchanger, flows through the water umbilical hoses back to the LCG. A fan circulates cabin air through the lunar dust filter.

2.6.3.2 Oxygen Supply and Cabin Pressure Control Section. (See figure 2.6-7.)

The ECS descent stage oxygen supply hardware consists of the following: two descent oxygen tanks, two high-pressure fill couplings, high-pressure oxygen control assembly, interstage flex line, and descent stage disconnect. The descent tanks pressure transducers, part of the IS, generate an output proportionate to tank pressure. The second descent stage oxygen tank connects to the common oxygen feed line and branches off into a high pressure PLSS fill line that has its own pressure regulator, overboard relief valve, interstage flex line, and descent stage disconnect. Two check valves prevent oxygen flow from one tank to the other.

The ascent stage oxygen supply hardware consists of the following: ascent stage disconnects, interstage flex line, oxygen module, two ascent oxygen tanks, low pressure PLSS oxygen disconnect (GFE), and the cabin pressure switch. In addition, the high pressure PLSS fill has its own interstage flex line, ascent disconnect, oxygen shutoff valve, high pressure PLSS oxygen disconnect, and a PLSS hose. Two automatic pressure relief and dump valves, one in each hatch, protect the cabin from overpressurization. Two ascent stage tank pressure transducers and a selected oxygen supply transducer, part of the IS, operate in conjunction with OSCPCS.

The OSCPCS stores gaseous oxygen, replenishes the ARS oxygen, and provides refills for the PLSS oxygen storage tank. Before staging, oxygen is supplied from the descent stage oxygen supply. After staging, or if the descent supply is depleted, the ascent stage oxygen tanks supply oxygen to the oxygen control module. The high-pressure assembly in the descent stage, and the oxygen control module in the ascent stage, contain the valves and regulators necessary to control oxygen in the OSCPCS. Two cabin relief and dump valves vent excess cabin pressure.

Descent tank pressure, approximately 2690 psia, is reduced to a level that is compatible with the components of the oxygen control module, approximately 900 psig, by a high-pressure regulator. A series-redundant bypass relief valve protects the descent oxygen tanks against overpressurization. In addition, a series-redundant overboard relief valve protects the oxygen control module against excessive pressure caused by a defective regulator or by flow through the bypass relief valve. If the pressure on the outlet side of the regulator rises to a dangerous level, the burst diaphragm assembly vents the high-pressure assembly to ambient. A poppet in the burst diaphragm assembly reseats when pressure in the high-pressure assembly is reduced to approximately 1,000 psig. Descent oxygen flows through the interstage disconnect to the oxygen control module and is controlled with the descent oxygen shutoff (DES O_2) valve. The interstage disconnect acts as a redundant seal to prevent loss of oxygen overboard after staging.

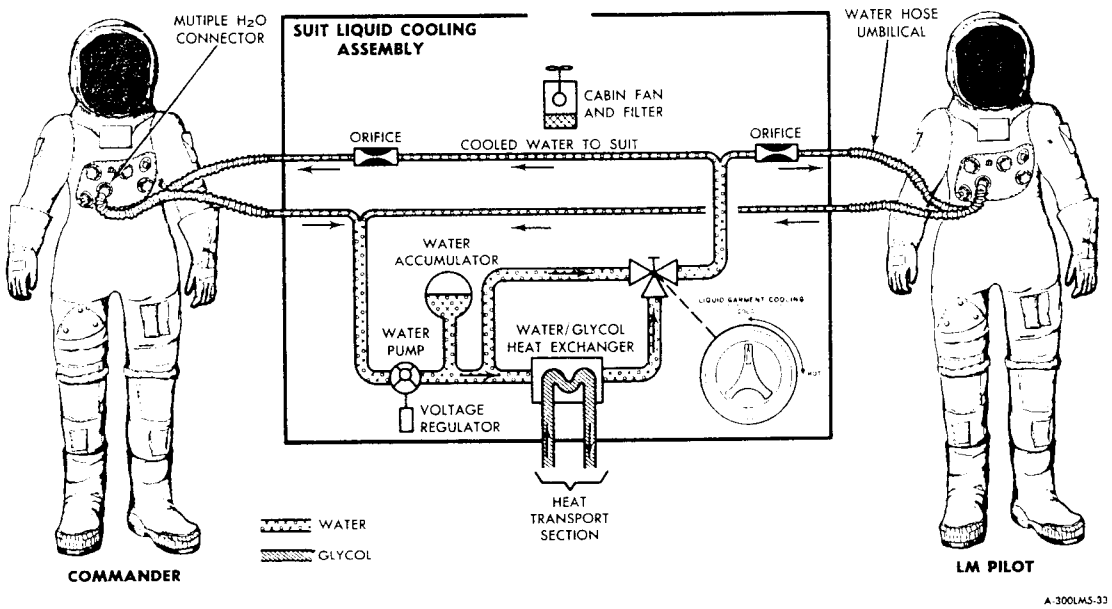

Figure 2.6-6A. Suit Liquid Cooling Assembly - Schematic Flow Diagram

When ascent stage oxygen is required, the ascent oxygen shutoff (#1 and #2 ASC O_2) valves are used to select their respective tank. A mechanical interlock prevents the valves from being opened unless the descent oxygen shutoff valve is closed. The mechanical interlock may be overridden (if the descent oxygen shutoff valve cannot be closed and the ascent oxygen shutoff valves must be opened) by pressing the INTLK OVRD pushbutton on the oxygen control module.

From the oxygen shutoff valves, oxygen is routed to oxygen demand regulators (PRESS REG A and PRESS REG B valves), a low pressure PLSS FILL valve, and a cabin repressurization and emergency oxygen (CABIN REPRESS) valve. The oxygen demand regulators maintain the pressure of the suit circuit at a level consistent with normal requirements. Both regulators are manually controlled with a four-position handle; both are ordinarily set to the same position. The CABIN position is selected during normal pressurized-cabin operations, to provide oxygen at 4.8±0.2 psia. Setting the regulators to EGRESS maintains suit circuit pressure at 3.8±0.2 psia. The DIRECT O_2 position provides an unregulated flow of oxygen into the suit circuit. The CLOSE position shuts off all flow through the regulator. In the CABIN and EGRESS positions, the regulator is internally modulated by a reference pressure from the suit circuit. The demand regulators are redundant; either one can fulfill the ARS oxygen requirements.

Descent tank No. 2 pressure, approximately 2690 psia, is reduced to approximately 1400 psia by a high pressure PLSS regulator. The oxygen is then routed to a high pressure PLSS FILL valve, which connects to the PLSS oxygen tank through a flex hose. A check valve in the PLSS disconnect is opened when the hose is connected. The valve automatically closes when the hose is disconnected.

If cabin pressure drops to 3.7 to 4.45 psia, the cabin pressure switch energizes the CABIN REPRESS valve, and oxygen flows through the valve into the cabin. If cabin pressure builds up to 4.40 to 5.0 psia, the cabin pressure switch deenergizes the valve solenoid, shutting off the oxygen flow. The valve can maintain cabin pressure at 3.5 psia for at least 2 minutes following a 0.5-inch-diameter puncture of the cabin. It responds to signals from the cabin pressure switch during pressurized-cabin operation. Manual override capabilities are provided.

The two cabin relief and dump valves are manually and pneumatically operated. They prevent excessive cabin pressure and permit deliberate cabin decompression. The valves automatically relieve cabin pressure when the cabin-to-ambient differential reaches 5.4 to 5.8 psid. When set to AUTO, the valves can be opened manually with their external handle. Each valve can dump cabin pressure from 5.0 to 0.08 psia in 180 seconds without cabin inflow. In addition to relieving positive pressure, the valves relieve a negative cabin pressure condition.

To egress from the LM, the PRESS REG A and PRESS REG B valves are set to EGRESS, turning off the cabin fan and closing the SUIT GAS DIVERTER valve; the CABIN GAS RETURN valve is set to EGRESS, the CABIN REPRESS circuit breaker is opened; and cabin pressure is dumped by setting the cabin relief and dump valve to OPEN. When repressurizing, the CABIN REPRESS circuit breaker is closed, the cabin relief and dump valve is set to AUTO, the PRESS REG A and PRESS REG B valves are set to CABIN, and the CABIN GAS RETURN valve is set to AUTO. The CABIN warning light goes on when the regulators are set to CABIN, it goes off when the cabin reaches the actuation pressure of the cabin pressure switch.

2.6.3.3 Water Management Section. (See figure 2.6-8.)

The WMS stores water for metabolic consumption, evaporative cooling, fire extinguishing, and PLSS water tank refill. It controls the distribution of this stored water and the water reclaimed from the ARS by the water separators. Reclaimed water is used only for evaporative cooling, in the ECS sublimators. Water is stored in two tanks in the descent stage and two identical smaller tanks in the upper midsection of the ascent stage. All water tanks are bladder-type vessels, which are pressurized with nitrogen before launch. The controls for the WMS are grouped together on the water control module located to the right rear of the LM Pilot's station.

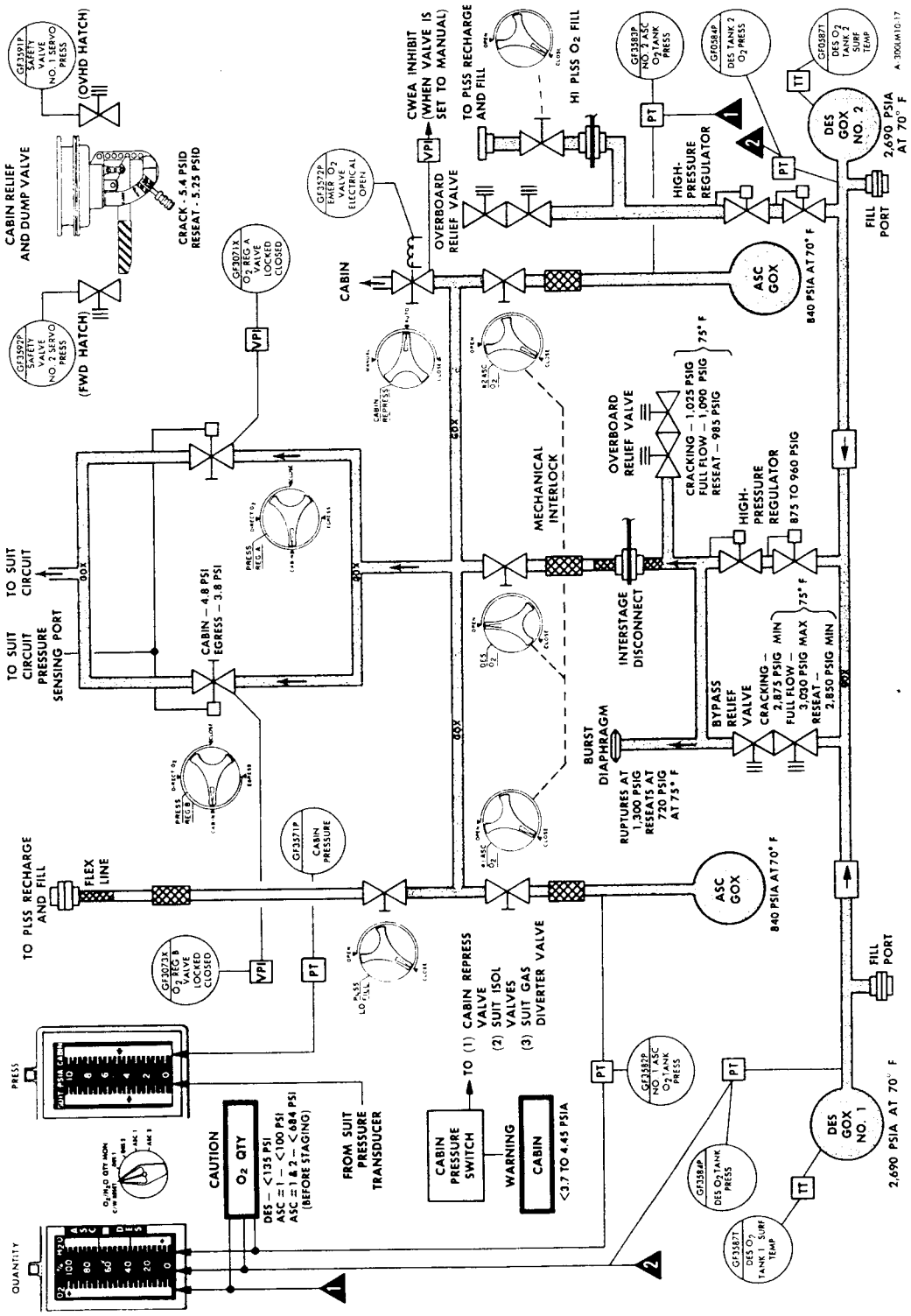

Figure 2.6-7. Oxygen Supply and Cabin Pressure Control Section

Water from the descent stage water supply is fed through a manually operated shutoff (DES H_2O) valve, and a check valve, to the PLSS H_2O DISCONNECT. Water quantity is determined by a pressure transducer with a range of 0- to 60-psia. The output is displayed on the H_2O QUANTITY indicator (panel 2) after the O_2/H_2O QTY MON selector switch is set to DES 1 or DES 2. A nomograph is supplied to convert the readings on the H_2O QUANTITY indicator into actual percentage of water indications. FULL and 16% FULL marks are affixed to the indicator. When the DES H_2O valve is set to OPEN, high-pressure water is available for drinking, food preparation, PLSS fill, and fire extinguishing.

When the vehicle is staged, the descent interstage water feed line is severed by the interstage umbilical guillotine and water is supplied from the ascent stage water tanks. Water quantity in each ascent stage tank is measured and displayed in the same manner as descent water quantity; the O_2/H_2O QTY MON switch is set to ASC 1 or ASC2, as required. The water quantity measuring system for ascent stage water is similar to the one for descent stage water. The H_2O QUANTITY indicator marks are affixed for FULL and 95% FULL indications. Water from ascent stage water tank No. 1 is fed to the PLSS H_2O DISCONNECT through the ascent water (ASC H_2O) valve for drinking, food preparation, PLSS fill, and fire extinguishing.

Water from the ascent and descent water tanks enters the WATER TANK SELECT valve which consists of two water diverting spools. Setting the valve to DES or ASC determines which supply is on-line.

When using the descent supply, water is routed to the primary pressure regulators by setting the WATER TANK SELECT valve to DES. The water flows through the series primary pressure regulators, which control water discharge pressure in response to suit circuit gas reference pressure, at 0.5 to 1.0 psi above this gas pressure. With the PRI EVAP FLOW #1 valve set to OPEN, the water is routed through a flow limiter to the primary sublimator. The flow limiter limits the water flow rate during the sublimator startup period. Discharge water from the water separator is routed through the secondary spool of the selector valve and joins the water from the primary pressure regulators. Setting the WATER TANK SELECT valve to ASC routes water from the ascent tanks through the primary pressure regulators and, with PRI EVAP FLOW #1 valve set to OPEN, to the primary sublimator. Water flow from the water separators is not changed by selection of the ASC position. If the primary pressure regulators fail an alternative path to the primary sublimator is provided by setting the PRI EVAP FLOW #2 valve to OPEN. Water then flows directly from the ascent water tanks through the secondary pressure regulator, and the PRI EVAP FLOW #2 valve through the flow limiter to the primary sublimator.

Under emergency conditions (failure of the primary HTS loop), water from the ascent tanks is routed through the secondary manifold (secondary pressure regulator) by setting the SEC EVAP FLOW valve to OPEN. This allows for flow of water to the second in series pressure regulator through flow limiters, to the secondary sublimator and the suit circuit sublimator. Discharge water from the water separators is also diverted to these sublimators. To divert water, the WATER TANK SELECT valve is set to SEC.

2.6.3.4 Heat Transport Section. (See figure 2.6-9.)

The HTS consists of two closed loops (primary and secondary) through which a water-glycol solution is circultated to cool the suit circuits, cabin atmosphere, and electronic equipment. Coolant is continuously circulated through cold plates and cold rails to remove heat from electronic equipment and batteries. For the purpose of clarity, the primary and secondary coolant loops, and the primary and secondary coolant loop cold plates and rails are discussed separately in the following paragraphs. When necessary, the primary loop is also a heat source for suit loop oxygen and a cooling source for the liquid-cooled garment. Heat is removed by absorption and is rejected to space by sublimation.

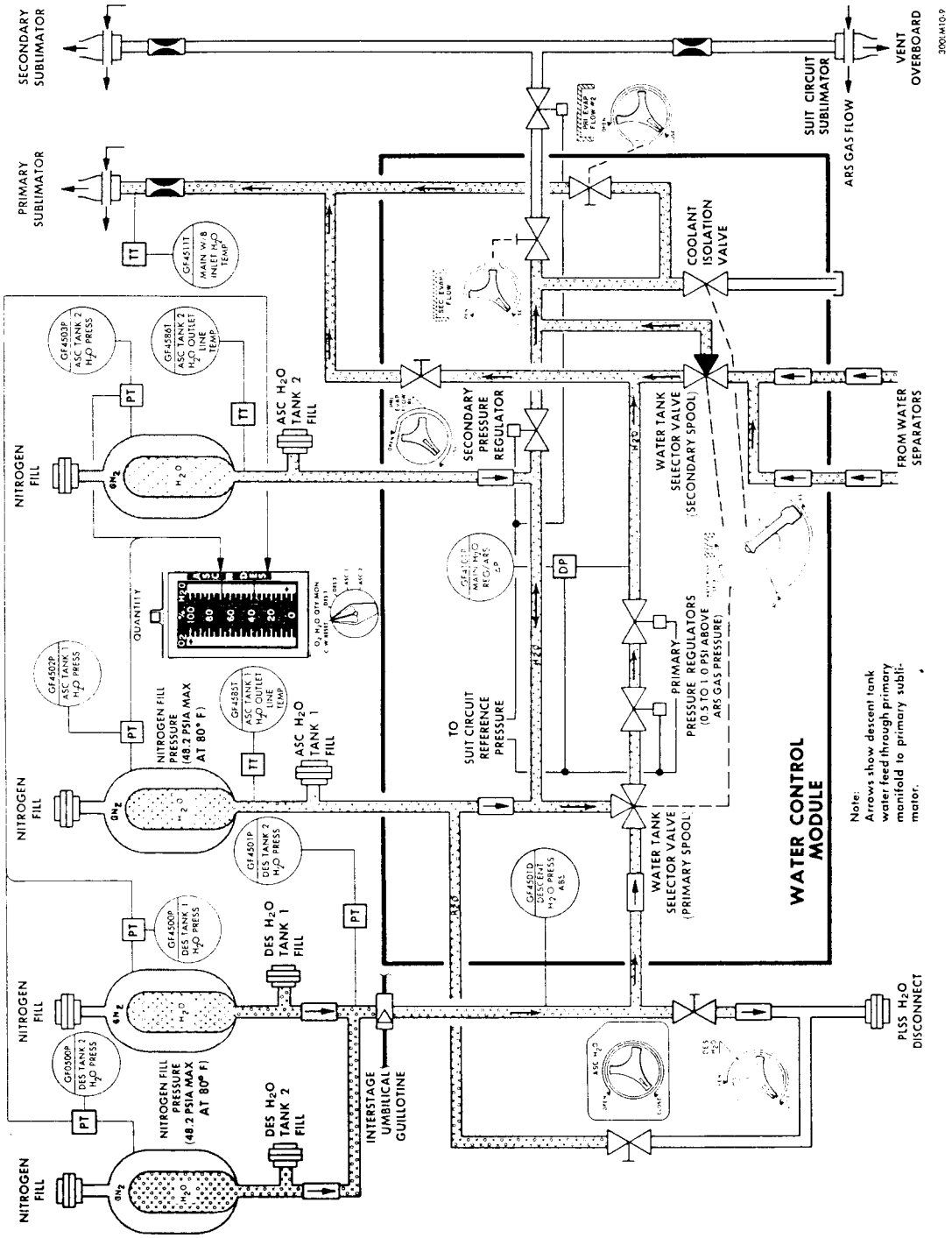

Figure 2.6-8. Water Management Section - Simplified Functional Flow Diagram

2.6.3.4.1 Primary Coolant Loop.

The primary coolant loop is charged with coolant at GSE fill points and is then sealed. The glycol pumps force the coolant through the loop. The glycol accumulator maintains a constant head of pressure (5.25 to 9 psia, depending on coolant level) at the inlets of the primary loop glycol pumps. Coolant temperature at the inlets is approximately +40°F. A switch in a low-level sensor trips when only 10±5% of coolant volume remains in the accumulator. When tripped, the switch provides a telemetry signal and causes the GLYCOL caution light (panel 2) to go on.

The coolant is routed to the pumps through a filter, which has a bypass to maintain flow if the element becomes clogged. Each pump can provide a minimum of 3.7 pounds per minute of coolant flow at 40° F with a pressure rise of 30 psid when subjected to a voltage of 28 volts dc. They are started by closing the ECS: GLYCOL PUMP 1 and 2 circuit breakers and setting the GLYCOL selector switch to PUMP 1 or PUMP 2. If the operating pump does not generate a minimum differential pressure (ΔP) of 7±2 psi (or if the pump ΔP drops below 3 psid after primary pump operation has been initiated), the ΔP switch generates a signal to energize the ECS caution light and the glycol pump (GLYCOL) component caution light. Manually selecting the other pump deenergizes the lights when the onstream pump develops in minimum ΔP of 5.0 to 9.0 psid. If both pumps fail, the secondary loop is activated by setting the WATER TANK SELECT valve to SEC, setting the GLYCOL switch to INST (SEC), and closing the ECS: GLYCOL PUMP SEC circuit breaker. Automatic transfer from primary pump No. 1 to primary pump No. 2 is initiated by closing the ECS: GLYCOL PUMP AUTO TRNFR circuit breaker and setting the selector switch to PUMP 1. When transfer is necessary, the ECS caution light and the GLYCOL component caution lights go on, the transfer is accomplished, and the ECS caution light goes off. The GLYCOL component caution light remains on.

If primary loop ΔP exceeds 33 psia, the appropriate pump bypass relief valve opens and routes the coolant back to the pump inlet, relieving the pressure. These relief valves start to open at 33 psia, are fully open at a maximum of 39 psia, and reseat at a minimum of 32 psia. Check valves prevent coolant from feeding back through an inoperative primary pump.

Part of the coolant leaving the recirculation assembly flows to the suit circuit heat exchanger to cool the suit circuit gas of the ARS. The remainder of the coolant flows to electronic equipment mounted on cold plates. The flow paths then converge and the coolant is directed to the liquid-cooled garment water-glycol heat exchanger to cool suit water as required. The coolant then flows through the aft equipment bay cold rails. A portion of the warmer coolant flow returing from the aft equipment bay cold rails can be diverted to the suit circuit regenerative heat exchanger through the SUIT TEMP valve to increase suit inlet gas temperature. The diverted flow returning from the heat exchanger, combined with the bypassed coolant, is routed to the primary sublimator.

The sublimator decreases the temperature of the coolant by rejecting heat to space through the sublimation of water, followed by the venting of the generated steam through an overboard duct. A thrust deflector located above the duct exit port diffuses the axhaust steam, thereby decreasing the thrust effect on the vehicle. Pressure regulators in the subimator water feed line maintain water outlet pressure at 0.4 to 1.0 psid above the referenced suit circuit pressure. This regulated water outlet pressure will be above 4.0 psia and will normally be below 7.0 psia. During the suit pressure integrity check, the regulated water outlet pressure can be as high as 10 psia for a short time. The sublimator inlet and outlet temperatures are sensed by temperature transducers, which provide telemetry signals. Coolant from the sublimator flows through the ascent and descent battery cold rails, then returns to the recirculation assembly.

Self-sealing disconnects upstream and downstream of the glycol pumps permit servicing and operation of the HTS by GSE. Interstage disconnects are installed in coolant lines that connect to the descent stage. Before staging, coolant flows through the ascent and descent stage battery cold rails. After staging, the interstage disconnects separate, the lines are sealed by the interstage disconnects and the full coolant flow enters the ascent stage battery cold rails.

2.6.3.4.2 Secondary Coolant Loop.

The secondary (emergency) coolant loop provides thermal control for those electronic assemblies and batteries whose performance is necessary to effect a safe return to the CSM. Cooling is provided by the secondary sublimator. The procedure for starting up the secondary loop is discussed in paragraph 2.6.3.4.1.

The secondary loop is also charged with coolant at GSE fill points and is sealed. A secondary accumulator identical with the primary accumulator maintains a positive secondary pump inlet pressure. As with the primary pump, the secondary pump is protected by a filter which has a bypass to maintain flow if the element becomes clogged. A pump bypass relief valve relieves excessive pressure by routing coolant back to the pump inlet. A check valve at the discharge side of the glycol pump prevents coolant flow from bypassing the HTS during GSE operation. The coolant from the pump passes through the check valve, to the secondary passage of the cold plates and cold rails of the electronics and batteries section. Waste heat is absorbed by the coolant. The warm coolant then flows to the secondary sublimator.

The secondary sublimator operates in the same manner as the primary sublimator in the primary coolant loop. Water for the sublimator is provided when the SEC EVAP FLOW valve is set to OPEN. The coolant returns to the pump for recirculation.

2.6.3.4.3 Cold Plates and Rails. (See figure 2.6-9.)

Equipment essential for mission abort is mounted on cold plates and rails that have two independent coolant passages, one for the primary loop and one for the secondary loop.

Primary Coolant Loop Cold Plates and Rails. The cold plates and rails in the primary coolant loop are arranged in three groups: upstream electronics, aft equipment bay, and batteries.

Coolant from the recirculation assembly flows into parallel paths that serve the upstream electronics group. In this group, the data storage equipment assembly (DSEA) is cooled by cold rails; the remainder of the group, by cold plates. The cold plates are located in the pressurized and unpressurized areas of the LM. The flow rates through the parallel paths are controlled by flow restrictors, installed downstream of each cold plate group. The first upstream electronics flow path cools the suit circuit heat exchanger. The second flow path cools five cold plates mounted on the pressurized side of the equipment tunnel back wall. The third path serves the integrally cooled inertial measurement unit (IMU) and the rate gyro assembly (RGA) cold plate, both located in the unpressurized area (on the navigation base). All the plates for the fourth path are in the unpressurized area above the cabin; the ASA is on the navigation base. The fifth path serves the tracking light electronics (TLE), gimbal angle sequencing transformation assembly (GASTA), lighting control assembly (LCA), and data storage electronics assembly (DSEA) plates: one in the unpressurized area in front of the cabin, a second one in the control and display panel area, a third one below the cabin floor, and another one on the left wall of the cabin.

The aft equipment bay is cooled by eight cold rails; the flow is in parallel. The batteries are cooled by cold rails. The ascent batteries are in the center section of the aft equipment bay. The descent batteries are on the -Z- bulkhead. During the descent phase, the coolant flow is split between the descent batteries and the ascent batteries; the ascent batteries are not used during this time. When the stages are separated,

quick-disconnect break the coolant lines and seal the ends; all coolant then flows through the ascent battery cold rails.

Secondary Coolant Loop Cold Plates and Rails. The secondary coolant loop is for emergency use. Only cold plates and cold rails that have two independent passages (one for the primary loop and one for the secondary loop) are served by this loop.

In the upstream electronics area, the secondary coolant flow is split between three cold plates (RGA, ASA, and TLE) in parallel. The flow rate is controlled by flow restrictors downstream of the TLE and RGA. After these three plates, the secondary loop cools the ascent battery cold rails and the aft equipment bay cold rails in a series-parallel arangement. The coolant first flows through three ascent battery cold rails in parallel, then through eight aft equipment bay cold rails in parallel.

2.6.4 MAJOR COMPONENT/FUNCTIONAL DESCRIPTION.

2.6.4.1 Atmosphere Revitalization Section.

2.6.4.1.1 Suit Circuit Assembly.

Suit Circuit Relief Valve. The SUIT CIRCUIT RELIEF valve is an aneroid-operated, poppet-type valve that protects the suit circuit against overpressurization. The valve has AUTO, OPEN, and CLOSE positions. Two externally mounted microswitches provide telemetry signals when the OPEN or CLOSE position is selected.

In the AUTO position, the valve responds to pressure sensed by the aneroid, and cracks open at approximately 4.3 psia to prevent overpressurization of the suit loop by allowing oxygen flow to the cabin. At 4.7 psia, the valve is fully open and flows approximately 7.8 pounds per hour at +90° F. The valve reseats at approximately 4.3 psia. In the OPEN position, the valve handle displaces the poppet from the seat to open the valve, regardless of pressure. In the CLOSE position, if the valve fails to reseat, the automatic poppet is left open, but an auxiliary poppet is closed, maintaining pressure.

Suit Gas Diverter Valve. (See figure 2.6-10.) The SUIT GAS DIVERTER valve is a manuually operated, two-way valve (one inlet and two outlets) with a solenoid override in one direction. The valve is on the ECS package above the oxygen control module. When the valve handle is pushed into CABIN position, oxygen is directed into the cabin. The valve is maintained in this position, against main spring

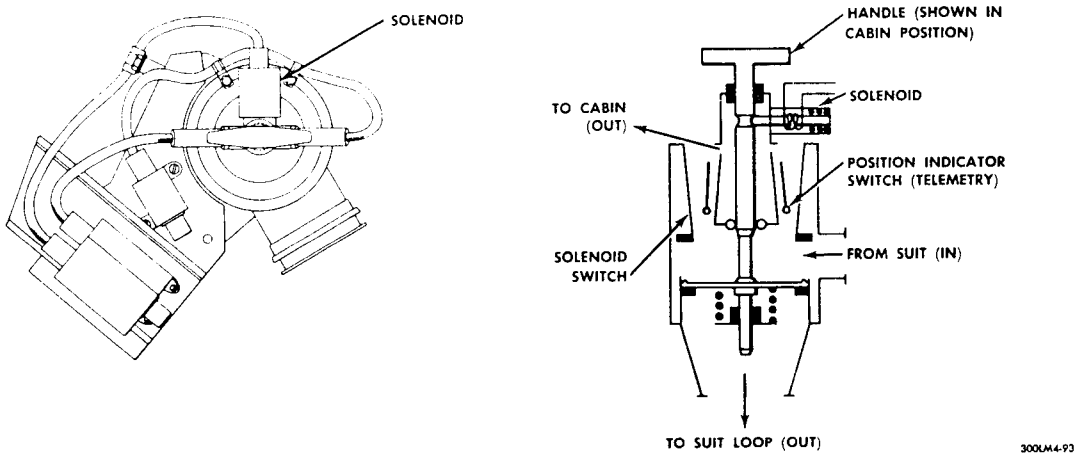

Figure 2.6-10. Suit Gas Diverter Valve - Functional Schematic

pressure, by a deenergized solenoid. Pulling the valve handle to EGRESS position overrides the solenoid and permits the valve to reposition to its upper seat, blocking flow to the cabin.

An automatic closed-to-cabin feature is provided. If cabin pressure falls to below normal level while the valve is set to CABIN, the solenoid is energized by the cabin pressure switch, and the main spring returns the valve to the EGRESS position. Electrical power is also supplied to the diverter valve when the PRESS REG A and PRESS REG B valves are set to EGRESS. The diverter valve has a valve-position-indicating switch that provides a telemetry signal when the valve is in the EGRESS position.

Cabin Gas Return Valve. The CABIN GAS RETURN valve is a spring-loaded, flapper-type valve. The valve has AUTO, OPEN, and EGRESS (closed) positions. In the AUTO position, the valve automatically permits cabin gas to return to the suit circuit. When the cabin is depressurized, the suit circuit pressure closes the valve, preventing backflow into the cabin. The OPEN and EGRESS positions provide manual override of the AUTO position. Valve-position-indicating switches provide telemetry signals when the valve is set to OPEN or EGRESS.

CO_2 Canister Selector Valve, and CO_2 and Odor Removal Canisters. The CO_2 CANISTER SEL valve is a dual-flapper-type valve that routes flow through the CO_2 and odor removal canisters. The valve has PRIM and SEC positions. One flapper is at the inlet to the canisters; the other, at the outlet.

Each canister contains a cartridge filled with lithium hydroxide (LiOH) and activated charcoal. The primary canister cover has a debris trap, which may be replaced before, but not during, flight. A relief CO_2 valve in the canister permits flow to bypass the debris trap if it becomes clogged. The CANISTER SEL valve is sufficiently leakproof to permit replacement of cartridges, with the cabin unpressurized.

The PRIM position permits suit circuit gas to flow through the primary canister. When replacing a saturated primary cartridge, the CO_2 CANISTER SEL valve handle is set to SEC. This unlocks the PRIMARY CO_2 CANISTER cover. A relief valve (VENT PUSH) equalizes the pressure of the cabin and the interior of the canister before canister cover removal. A finger latch, part of the canister cover, is released before the cover is rotated to OPEN.

Suit Circuit Fans. Each suit circuit fan is operated by a 28-volt d-c brushless motor. A full radial-type rotor with a vaneless diffuser is used; it moves approximately 24 cfm at 25,000 ±500 rpm. Fan operation is controlled by the SUIT FAN selector switch. The fans permit operation at sea level for checkout purposes. A 15-volt d-c input is provided for this purpose.

Suit Circuit Sublimator. The suit circuit sublimator has a water inlet and a steam outlet that is vented overboard. Water and suit circuit gas both make a single pass through the unit, which comprises a stack of modules of several layers of porous plates, and water, steam, and suit circuit gas passages. The sublimator rejects suit circuit heat to space if the suit circuit heat exchanger is inoperative.

Suit Circuit Heat Exchanger. The suit circuit heat exchanger is a duct-shaped unit of aluminum plate-and-fin construction. It has a single pass for both the coolant and the suit circuit gas and is used to remove excess heat in the ARS. Heat is transferred to the HTS coolant supplied to the heat exchanger.

Water Separator Selector Valve. The WATER SEP SEL valve is a manually operated, flapper-type valve that enables selection of either of two water separators. The valve handle is pushed in for separator No. 1 and pulled for separator No. 2.

Water Separators. (See figure 2.6-11.) Two water separators are connected in parallel, but only one is used at a time. Saturated gas and free moisture fed into the separator come in contact with the inlet stator blades, which direct the flow onto a rotor at the proper angle. Most of the entrained moisture collects on the rotating perforated plate, which centrifuges the water into a rotating water trough. A stationary pitot tube, placed tangentially to the rotating trough, picks up the removed water and discharges

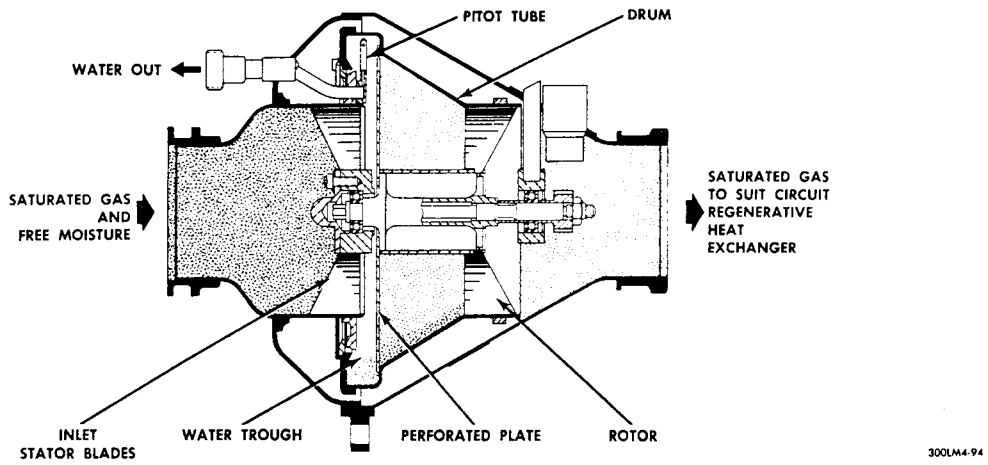

Figure 2.6-11. Water Separator - Functional Schematic

it to the WMS. The pitot pumping action creates a dynamic head of pressure sufficient to ensure positive flow from the water separator to the WMS. Water passing through the perforated plate collects on a rotating conical drum and is fed into the water trough. The oxygen flow drives the rotating parts of the separator.

Each water separator mounts an angular velocity transducer, which is a self-generating magnetic pickup that senses the rotation of the separator shaft. The pickup develops a signal whose frequency is converted to a voltage level with respect to separator rpm, in a signal conditioner unit. A water drain boss on each separator drains the cavity between the rotating drum and the outer shell of the unit. Plumbing attached to each drain boss carries water away from this area and dumps it into a surge (collection) tank outside the suit circuit.

Suit Circuit Regenerative Heat Exchanger. The suit circuit regenerative heat exchanger is of the aluminum plate-and-fin type. Heat from the circulating warm coolant is transferred to the oxygen which makes a single pass through the unit while the coolant makes two passes.

Suit Temperature Control Valve. The SUIT TEMP valve is a manually operated diverter valve that controls coolant flow through the suit circuit regenerative heat exchanger. Setting the valve to INCR HOT increases the temperature; setting it to DECR COLD reduces the temperature.

Suit Isolation Valves. (See figure 2.6-12.) The SUIT ISOL valves are manually operated, two-position, dual-ball valves. In the SUIT FLOW position, suit circuit gas is directed through the valve into the PGA, and from the PGA back into the suit circuit. In the SUIT DISC position, the valves keep the gas in the suit circuit, bypassing the PGA's and preventing flow in either direction between the suit circuit and PGA's.

Setting the valve handle to SUIT FLOW loads a solenoid-operated spring-return mechanism. A signal from the suit circuit pressure switch energizes the solenoid to release the return mechanism, which turns the valve to SUIT DISC. The ACTUATOR OVRD lever enables manual release of the return mechanism to the SUIT DISC position. A valve position indicator switch provides a telemetry signal when the valve is in the SUIT DISC position.

Carbon Dioxide Partial Pressure Sensor. (See figure 2.6-13.) The carbon dioxide partial pressure sensor, in the suit circuit assembly, is a single-beam, dual-wavelength, filter photometer, with ratio readout. The sensor operates on the infrared-absorption principle. It measures the amount of infrared energy absorbed by the carbon dioxide in a gas sample that passes through the sensor, by comparing transmitted energy of two different wavelengths in the infrared spectrum. (One wavelength is absorbed

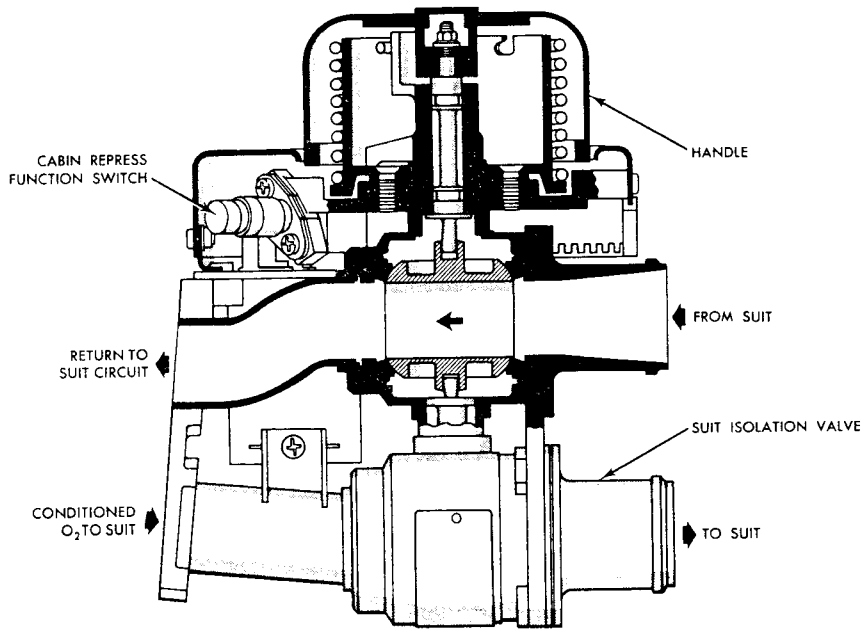

VALVE IN SUIT FLOW (OPEN) POSITION

A-300LM4-247

Figure 2.6-12. Suit Isolation Valve - Functional Schematic

by carbon dioxide; the other is a reference.) This establishes an amplified ratio signal that is indicated as a d-c voltage proportional to the partial pressure of carbon dioxide in the gas sample.

The sensor has two sections: optics and electronics. The optics section has the infrared energy source (a small tungsten lamp), a collimating lens, a lens that reimages the source on the dual filter, an aperture to fix the source image on the dual filter, and a lens that reimages the chopped and filtered source image onto the detector target. The electronics section detects and decodes the signal, computes the ratio and, then, reads out a continuous d-c voltage proportional to the partial pressure of carbon dioxide in the gas sample. The sensor provides an electrical signal to the PART PRESS CO_2 indicator and the CWEA, and a telemetry signal to indicate the carbon dioxide level in the gas supplied to the astronauts.

2.6.4.1.2 Suit Liquid Cooling Assembly.

Water-Glycol Heat Exchanger. The water-glycol heat exchanger transfers heat from the warm water returning from the LCG to the coolant of the HTS. This heat exchanger is of the cross-counterflow, single-pass water and multipass coolant type.

Liquid Garment Cooling Valve. The LIQUID GARMENT COOLING valve is a manually operated diverter valve that controls water flow to the water-gylcol heat exchanger. Part or all of the water may be manually diverted around the heat exchanger to provide varying degrees of cooling, depending upon astronaut needs.

Water Accumulator. The water accumulator consists of an aluminum housing, diaphragm, spring, diaphragm piston guide, and diaphragm piston. The system water pressure opposes the spring action in the accumulator to maintain the correct pressure level in the water loop. The accumulator serves as a reservoir to make up for system leakage and volumetric changes due to temperature fluctuations.

Water Pump. The water pump is of the diaphragm type; it circulates water through the suit liquid cooling assembly. A voltage regulator steps down the 28 volts dc to 16±2 volts dc for pump operation.

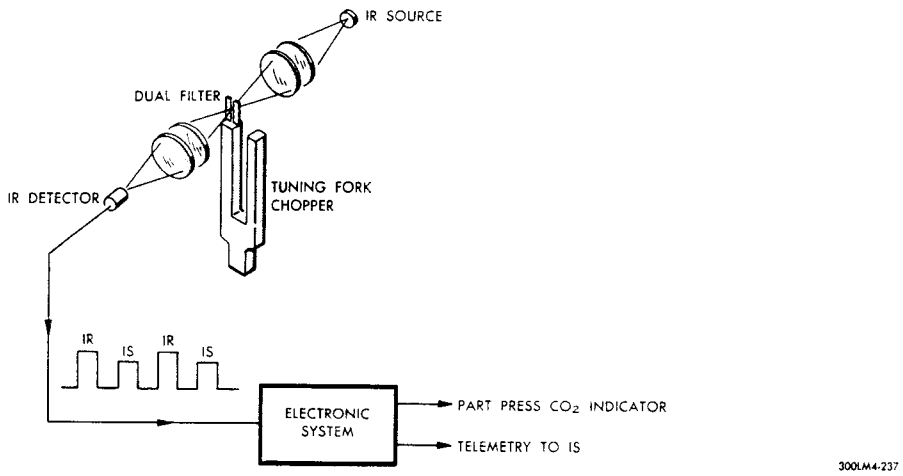

Figure 2.6-13. Carbon Dioxide Partial Pressure Sensor - Functional Schematic

Suit Water Umbilical Hoses. The water umbilical hoses circulate water between the LCG and the suit liquid cooling assembly. The hoses are flexible silicon rubber, covered with Beta cloth.

Multiple Water Connectors. The multiple water connectors are quick-disconnects that connect the water umbilical hoses to the LCG receptacle on the astronout outer suit. The connectors provide dual flow into, and out of, the LCG. Poppet valves minimize leakage during connecting and disconnecting.

Cabin Fan. The cabin fan recirculates cabin atmosphere for ventilation. The fan motor is of the brushless, d-c type; it operates on 28 volts dc with an input power of 35 watts average, 110 watts peak. The fan moves approximately 5 pounds of air per minute at 13,000 rpm. A filter, mounted on the ascent engine cover, removes lunar dust from the cabin atmosphere during ascent from the lunar surface. Oxygen passes through the filter, then through a duct to the cabin fan where it is discharged to the cabin. The fan permits operation at sea level for checkout purposes. 15-volt d-c input is provided for this purpose.

2.6.4.2 Oxygen Supply and Cabin Pressure Control Section.

2.6.4.2.1 Descent Oxygen Tanks.

Two descent oxygen tanks are located in the descent stage; one each in quads 3 and 4. Each tank holds 48.01 pounds of oxygen, stored at a pressure of 2,690 psia. Tank No. 2 provides four PLSS refills at 1.60 pounds each, and both tanks provide four cabin prepressurizations at 5.5 pounds each. Each tank is filled through a high-pressure fill port, which is capped and lockwired before launch.

2.6.4.2.2 High-Pressure Oxygen Control Assembly. (See figure 2.6-14.)

The major components of the high-pressure oxygen control assembly are a high-pressure oxygen regulator, a bypass-oxygen pressure relief valve, an overboard relief valve, and a burst diaphragm assembly.

High-Pressure Oxygen Regulator. (See figure 2.6-15.) The internally series redundant high-pressure oxygen regulator receives high-pressure oxygen from the descent oxygen tank(s) and regulates the pressure to 875 to 960 psia. If the upstream (primary) regulator sensor fails, the valve fails open, permitting the downstream (secondary) regulator to control outlet pressure. Descent oxygen that enters the regulator is sensed by the primary sensor. As the pressure builds up inside the sensor, it expands and allows the primary valve poppet to move towards its seat, regulating the outlet pressure to the secondary regulator. The secondary regulator operates in the same manner as the primary regulator.

Bypass Oxygen Pressure Relief Valve. (See figure 2.6-16.) The bypass oxygen pressure relief valve protects the descent oxygen tank(s) against overpressurization by bypassing the high-pressure oxygen regulator. The valve fails open if it malfunctions. Pressure acting on the plunger-and-bellows assembly displaces a belleville spring, causing its inside diameter to increase. This removes the force exerted by the belleville spring against the thin-walled tube around the plunger and allows inlet oxygen to vent to the

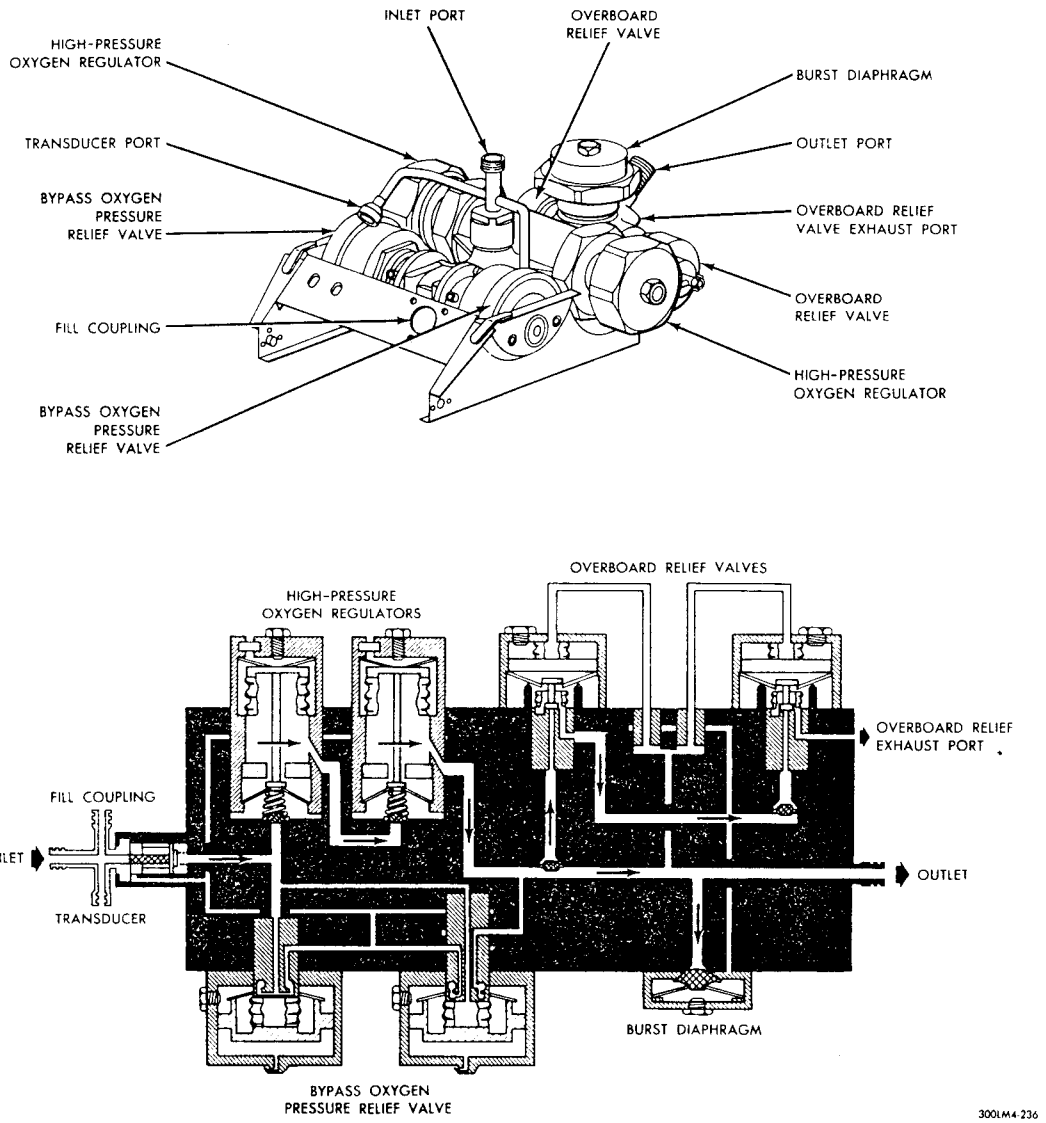

Figure 2.6-14. High-Pressure Oxygen Control Assembly - Functional Schematic

outlet port. If the relief valve malfunctions (bellows ruptures), oxygen is diverted to the guide chamber, causing the guide to close a seal. This places the valve in the failed-open condition and bypasses the oxygen to a secondary (identical) relief valve.

Overboard Relief Valve. (See figure 2.6-17.) The series-redundant overboard relief valve vents oxygen to ambient when the pressure downstream of the high-pressure oxygen regulator reaches 1,025 psig. The valve is fully open at 1,090 psig and reseats at 985 psig, at +75°F. System pressure at the first stage relief valve is not relieved overboard, due to the force of the poppet load spring. System pressure is also fed to both capsule sensing elements. When system pressure reaches 1,025 psig, the capsule sensing

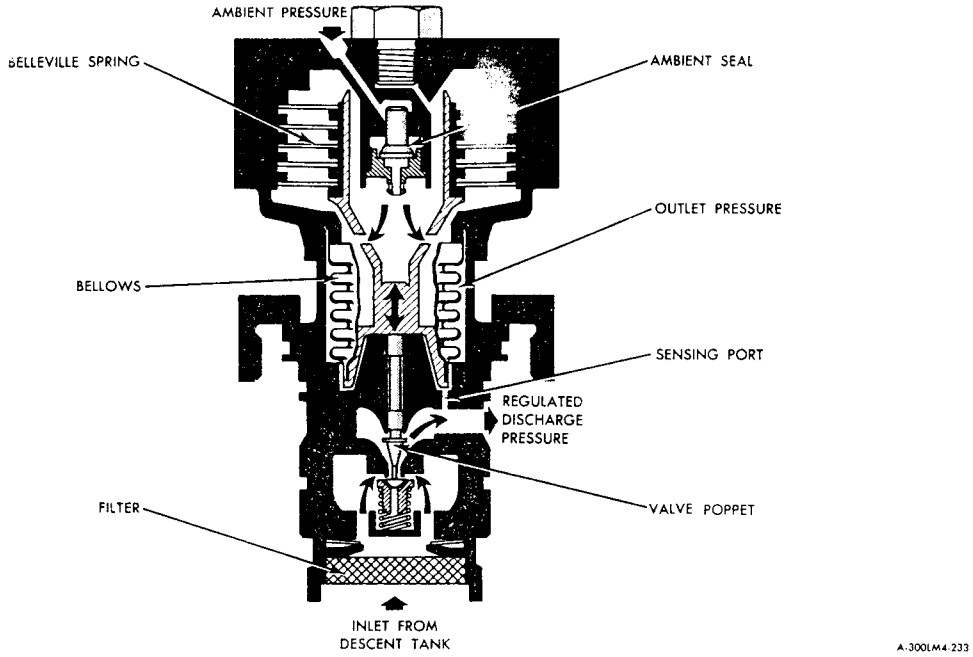

Figure 2.6-15. High-Pressure Oxygen Regulator - Functional Schematic

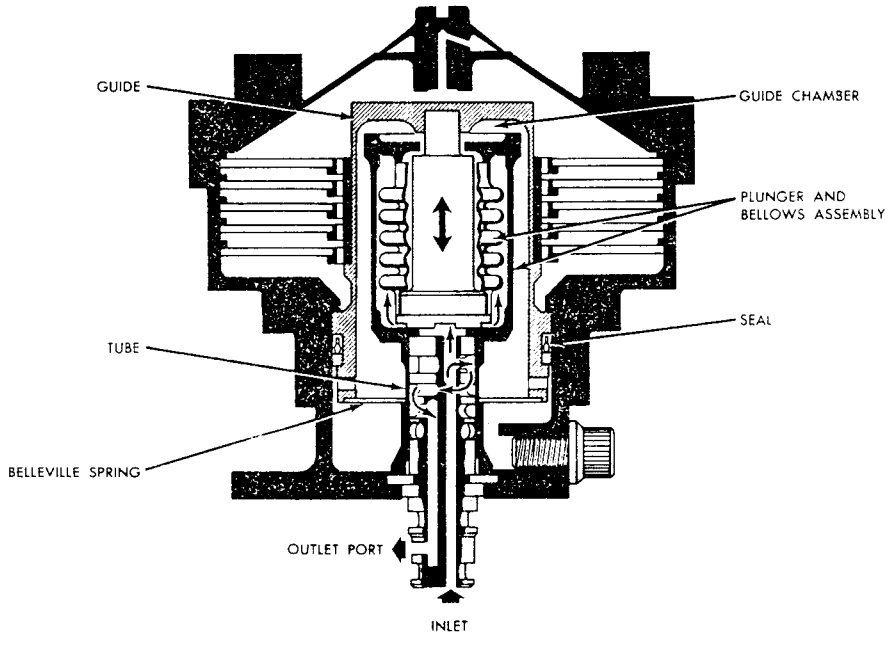

Figure 2.6-16. Bypass Oxygen Pressure Relief Valve - Functional Schematic

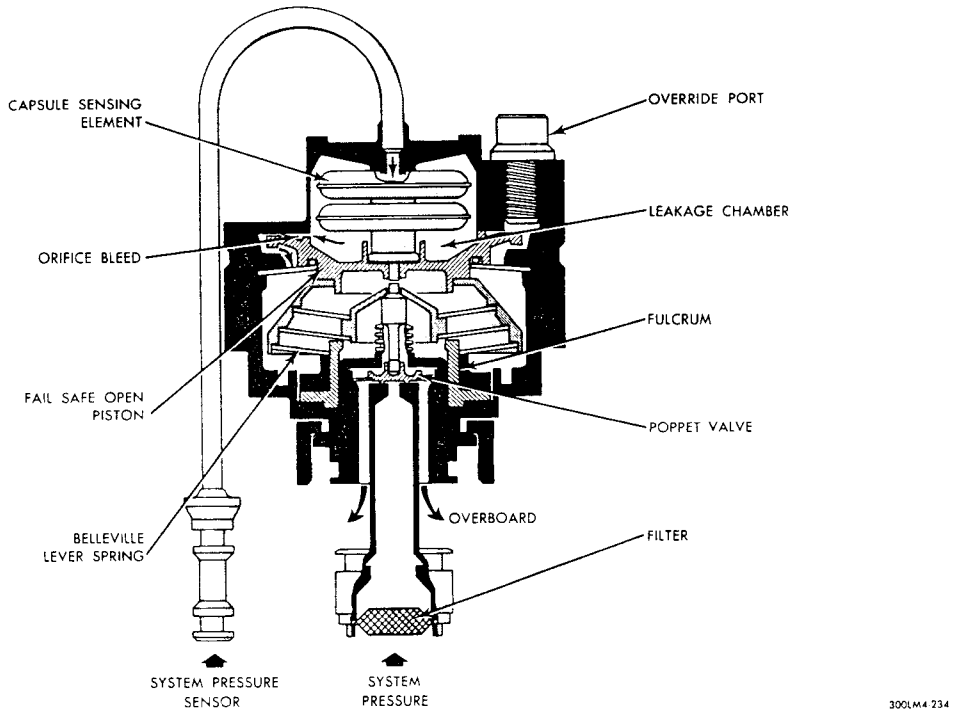

Figure 2.6-17. Overboard Relief Valve - Functional Schematic

elements expand, displacing the fail-safe pistons and exerting a force on the belleville lever springs. Belleville-lever-spring motion about the fulcrums opens the poppet valves.

The relief valve has a fail-open feature. If a capsule sensing element leaks, the oxygen is dumped into the leakage chamber. This leakage bleeds overboard; however, its flow rate is restricted by a bleed orifice in the piston. This allows leakage chamber pressure to build up to force the poppet valve open. As the piston is displaced to its full travel, proof-pressure stops and seals make contact, preventing further loss of oxygen overboard. The valve can flow from 0 to 50 pounds per hour at an inlet pressure of 1,100 psig.

Burst Diaphragm Assembly. (See figure 2.6-18.) The burst diaphragm assembly opens when the flow from the descent oxygen tanks(s) exceeds the relieving capability of the overboard relief valve. An aluminum disk in the inlet port of the burst diaphragm assembly ruptures at a system pressure between 1,300 and 1,400 psig. System pressure causes the diaphragm support to move away from the disk, causing it to rupture. The disk support poppet opens and vents the descent oxygen tank(s). The diaphragm assembly permits a minimum flow of approximately 10 pounds per minute. When descent oxygen pressure is reduced to 1,000 psia, the disk support poppet reseats to maintain sufficient oxygen for one cabin repressurization up to 1 hour after disk rupture.

2.6.4.2.3 Ascent Oxygen Tanks.

Two identical tanks supply all the oxygen required for metabolic consumption and to compensate for cabin and/or suit circuit leakage, oxygen component leakage, and loss due to cabin puncture, subsequent to switchover to ascent consumables. Both tanks are in the aft equipment bay. Oxygen flow from either tank is controlled by individual oxygen shutoff valves on the oxygen control module.

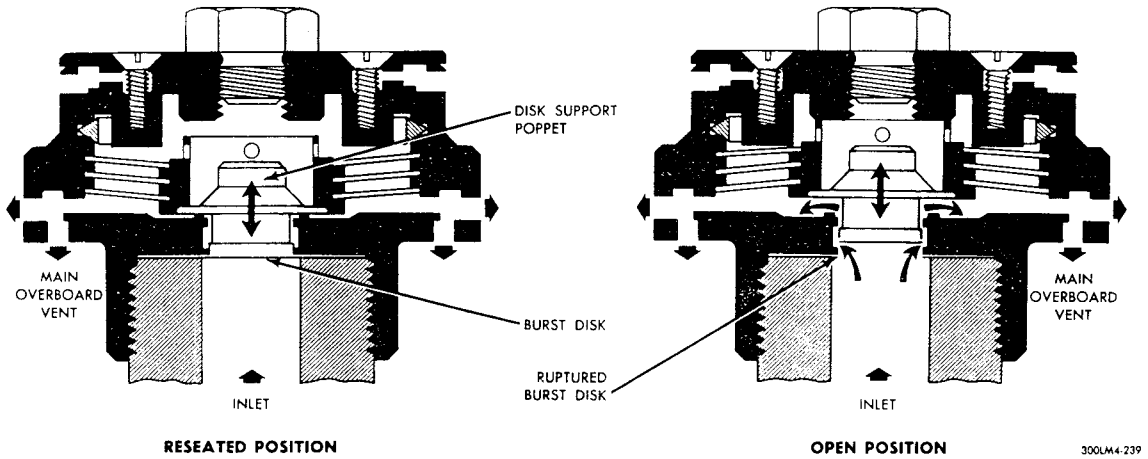

Figure 2.6-18. Burst Diaphram Assembly - Functional Schematic

2.6.4.2.4 Oxygen Filters.

Filters at the inlets to the oxygen control module and the PLSS disconnect remove particulate matter from the oxygen. Filtering capability is 18 microns nominal and 40 microns absolute.

2.6.4.2.5 Oxygen Control Module. (See figure 2.6-2.)

The oxygen control module is mounted on the suit circuit package located to the right rear of the LM Pilot's station. It consists of a cast housing that contains filters, a PLSS oxygen shutoff (PLSS FILL) valve, descent and ascent oxygen shutoff (DES O_2, #1 ASC O_2, #2 ASC O_2) valves, oxygen demand regulators (PRESS REG A and PRESS REG B) valves, and a cabin repressurization and emergency oxygen (CABIN REPRESS) valve. An interlock prevents opening the ascent oxygen shutoff valves until the descent oxygen shutoff valve is closed.

PLSS and Oxygen Tank Shutoff Valves. Four positive-action, manually operated shutoff valves control oxygen flow into the oxygen control module. Rotating the valve handle to OPEN displaces a spring-loaded seal. The valves have detents in the OPEN and CLOSE positions; mechanical stops on the handle prevent overtravel. (An additional PLSS FILL valve, installed in the cabin, is used for the high pressure PLSS fill line from the second descent stage oxygen tank. It is not part of the oxygen control module.

Oxygen Demand Regulators. (See figure 2.6-19.) The PRESS REG A and PRESS REG B valves, in parallel, regulate oxygen from the tanks to the suit circuit. Both regulators are manually controlled by individual four-position selector handles. Suit circuit pressure is fed back to an aneroid bellows that actuates a poppet. Rotating the valve handle to CABIN or EGRESS changes the spring force acting on the poppet and establishes two outlet pressure levels.

Selecting the DIRECT O_2 position, fully opens the valve. With an upstream pressure of 900 psia and a temperature of +70°F, one regulator can flow approximately 7.0 pounds per hour into the suit circuit. In the CLOSE position, an auxiliary poppet stops all flow through the regulator. Each regulator has a valve position indicator (VPI) switch, and a functional switch which controls electrical circuits in the ECS.

Cabin Repressurization and Emergency Oxygen Valve. (See figure 2.6-20.) The CABIN REPRESS valve is a solenoid-operated valve with manual override (MANUAL and CLOSE positions). It is used to repressurize the cabin after a deliberate decompression and provides an emergency flow of oxygen if the cabin is punctured. If the cabin is punctured and the diameter of the hole does not exceed 0.5 inch, the valve can

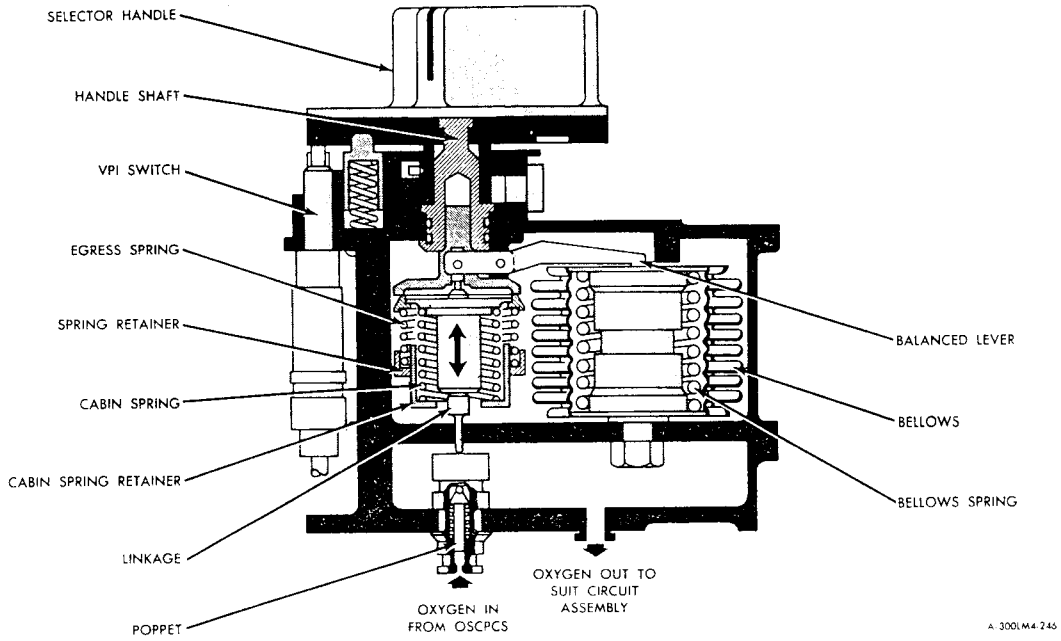

Figure 2.6-19. Oxygen Demand Regulator - Functional Schematic

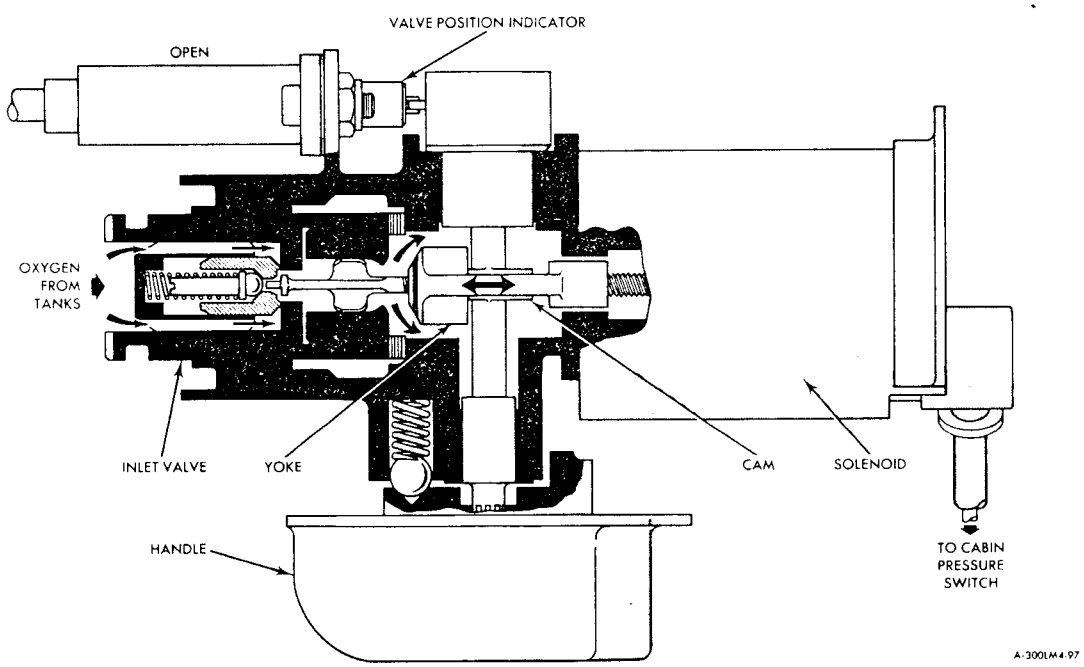

Figure 2.6-20. Cabin Repressurization and Emergency Oxygen Valve - Functional Schematic

maintain cabin pressure at 3.5 psia for at least 2 minutes, allowing the astronauts to return to a closed-suit environment. The valve is controlled by a three-position handle on the oxygen control module.

When the AUTO position is selected, valve operation is controlled by the solenoid, which is actuated by the cabin pressure switch. If cabin pressure drops below normal, the cabin pressure switch energizes the solenoid. This moves the valve yoke to open the inlet valve and permits oxygen in the manifold to flow through the valve into the cabin. If cabin pressure increases to normal, the cabin pressure switch de-energizes the solenoid and spring action closes the valve. When supplied by the descent oxygen tank(s), flow is 4 pounds per minute maximum; when supplied by the ascent tanks, 8 pounds per minute at 700 psia. When the MANUAL position is selected, the handle shaft actuates a cam that moves the yoke to open the inlet valve and establish flow to the cabin. In the CLOSE position, an auxiliary poppet is forced onto its seat, shutting off the flow.

2.6.4.2.6 Cabin Relief and Dump Valves. (See figure 2.6-21.)

A cabin relief and dump valve is installed in each hatch. The valve has a differential-pressure, servo-actuated poppet valve that prevents cabin overpressurization and permits deliberate (manual) dumping of cabin pressure. Each valve is controlled with either of two handles: one, inside the cabin; the other, outside. The inside handles can be used to select three positions (DUMP, AUTO, or CLOSE). The outside handles have only a DUMP position. A bacteria filter mounts on the forward cabin relief and dump valve. Pressure transducers associated with each valve provide a telemetry signal to indicate when the valves are relieving cabin pressure.

Normally, the cabin relief and dump valves are set to AUTO. In this position, the valves are operated by the servo valve. One side of the servo valve diaphragm is exposed to cabin pressure; the other side is vented overboard. When the cabin-to-ambient pressure differential reaches approximately 5.4 psi, the servo valve diaphragm overcomes the servo spring pressure and unseats the servo valve. This vents the spring side of the main poppet to ambient and causes a lower pressure. Cabin pressure on the main poppet overcomes the force of the main poppet spring and opens the valve. Oxygen is vented overboard and cabin pressure is reduced to an acceptable value. When the pressure differential is 5.8 psi, one fully open dump valve can dump 11.1 pounds of oxygen per minute overboard. When the valve handle inside the cabin is set to AUTO, the valve can be opened manually from outside.

Setting the internal handle to DUMP unseats the poppet. Each valve can dump the cabin pressure from 5.0 to 0.08 psia in 180 seconds without cabin oxygen inflow. Setting the handle to CLOSE prevents the valve from opening at normal pressures, if the servo valve fails.

2.6.4.2.7 Cabin Pressure Switch.

The cabin pressure switch monitors cabin pressure and enables electrical signals to control related ECS functions. The switch is an absolute-pressure device that consists of three separate hermetically sealed microswitch capsules. The capsules are set to provide switch closure when cabin pressure decays to 3.7 to 4.45 psia during pressurized-cabin operation. If this occurs, the SUIT GAS DIVERTER valve closes, the CABIN REPRESS valve opens, and the CABIN warning light goes on. Increasing cabin pressure to 4.40 to 5.0 psia opens the cabin pressure switch circuits, closes the CABIN REPRESS valve, and deenergizes the CABIN warning light.

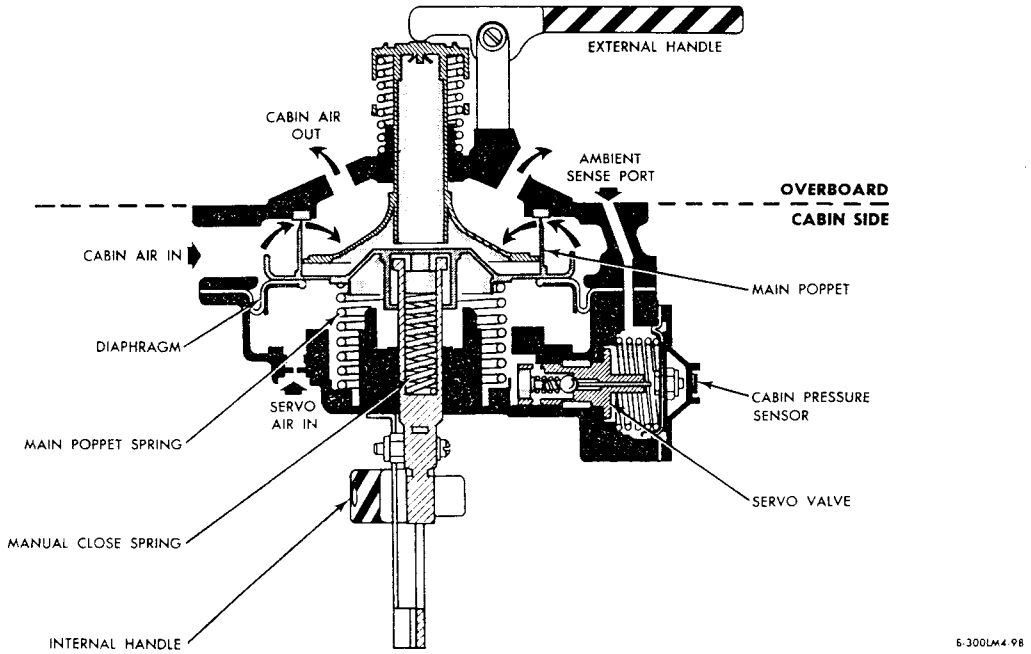

Figure 2.6-21. Cabin Relief and Dump Valve - Functional Schematic

2.6.4.3 Water Management Section.

2.6.4.3.1 Descent Stage Water Tanks.

Each descent stage water tank is aluminum with an internally mounted standpipe and bladder. The bladder contains the water; the space between the tank and bladder is charged with nitrogen according to a schedule dependent on the load (48.2 psia maximum at +80° F). The nitrogen squeezes the water out of the bladder through the standpipe and into the system. The tank outlet is connected to the water control module. Water from the descent water tank is routed through the WATER TANK SELECT valve by setting it to DES. The two tanks are interconnected upstream of the interstage umbilical guillotine. Check valves at each tank outlet prevent backflow of water from one tank into the other.

Descent Water Valve. The descent water (DES H_2O) valve is a manually operated, poppet-type shutoff valve. The valve has OPEN and CLOSE positions. In the OPEN position, the valve provides high-pressure water flow from the descent tank(s) to the water dispenser.

2.6.4.3.2 Ascent Stage Water Tanks.

The ascent stage water tanks are in the overhead unpressurized portion of the cabin. They are similar to the descent stage water tank(s) but are smaller. An initial nitrogen charge of 48.2 psia at +80° F is used in each ascent and descent tank. The tank outlets are connected to the water control module. Water from the ascent water tanks is routed through the WATER TANK SELECT valve by setting it to ASC.

Ascent Water Valve. The ascent water (ASC H_2O) valve, at the top of the water control module, is a manually operated, poppet-type shutoff valve. The valve has OPEN and CLOSE positions. In the OPEN position, the valve provides high-pressure water flow from the ascent tank No. 1 to the water dispenser.

2.6.4.3.3 Water Control Module. (See figure 2.6-2.)

The manual controls of the WMS are grouped together on the water control module. The module consists of a cast aluminum manifold in which check valves, shutoff valves, a water tank selector valve, and water pressure regulators are mounted. All the interconnecting passages, and brackets to mount and support the foregoing components as well as to mount the assembly itself, are an integral part of the cast housing of the module. Each water tank outlet is connected to the module, which diverts the water to selected flow paths.

Check Valves. There are five check valves in the water control module: one in each tank feed line, and one in each discharge line from the ARS water separators. The check valves prevent water flow from the module to the water tanks and water separators. One other check valve is in the descent H_2O line, external to the water module. (For LM 10 and subsequent, two additional check valves are provided, one at each descent stage water tank outlet.)

Water Tank Selector Valve. (See figure 2.6-22.) The WATER TANK SELECT valve is a manually operated, three-position, two-spool valve. The two spools (primary and secondary), linked to the valve handle, rearrange the internal ports to establish proper flow paths. The valve has DES, ASC, and SEC positions.

In the DES position, the primary spool establishes a flow path between the descent water tank(s) and the primary water manifold. In the ASC position, the primary spool establishes a flow path between the ascent tanks and the primary water manifold. When the valve handle is moved to the SEC position, the secondary spool is moved diverting flow from the ARS water separators to the secondary manifold and routing water from the ascent water tanks to the secondary manifold.

Water Pressure Regulators. (See figure 2.6-23.) Four water pressure regulators are in the WMS. Two are in series in the primary manifold, one is in the secondary manifold and one is in the water pressure regulator module, external to the water module. The regulators contain a spring-loaded diaphragm that senses the differential between ARS reference pressure and the downstream water pressure. The diaphragm moves a balanced lever attached to a metering poppet. The water discharge pressure is maintained to 0.5 to 1.0 psi above the reference pressure.

Primary Evaproator Flow Valve No. 1. The PRI EVAP FLOW #1 valve is a manually operated, poppet-type shutoff valve. It has OPEN and CLOSE positions. In the OPEN position, the valve allows flow from the ascent or descent water tanks, through the primary regulators, to the primary sublimator.

Primary Evaporator Flow Valve No. 2. The PRI EVAP FLOW #2 valve is a manually operated, poppet-type shutoff valve. It has OPEN and CLOSE positions. In the OPEN position, the valve acts as backup to the PRI EVAP FLOW #1 valve to provide ascent tank water from the secondary water manifold to the primary sublimator.

Secondary Evaporator Flow Valve. The SEC EVAP FLOW valve is a manually operated, poppet-type shutoff valve. It has OPEN and CLOSE positions. The valve controls water flow from the secondary water manifold to the secondary sublimator and to the suit circuit sublimator.

Water Pressure Regulator Module. The water pressure regulator module consists of a pressure regulator and a manifold. The module is in the secondary water circuit, downstream and in series with the secondary water pressure regulator in the water control module.

2.6.4.4 Heat Transport Section.

2.6.4.4.1 Coolant Accumulator.

The coolant accumulator consists of a two-piece aluminum cylinder that contains a movable spring-loaded piston bonded to a diaphragm. The fluid-side contains approximately 46 cubic inches (maximum) of fluid under pressure. The pressure varies, directly with fluid level, from 5.6 psia at 5% level to 8.0 psia at 80% level. The accumulator maintains a head of pressure on the glycol pump inlets to prevent cavitation and replaces coolant lost through subsystem leakage. The piston moves in response to volumetric changes caused by temperature variations in the primary loop or by leakage. The accumulator spring side is vented to space. There is one accumulator in the primary loop and an identical one in the secondary loop.

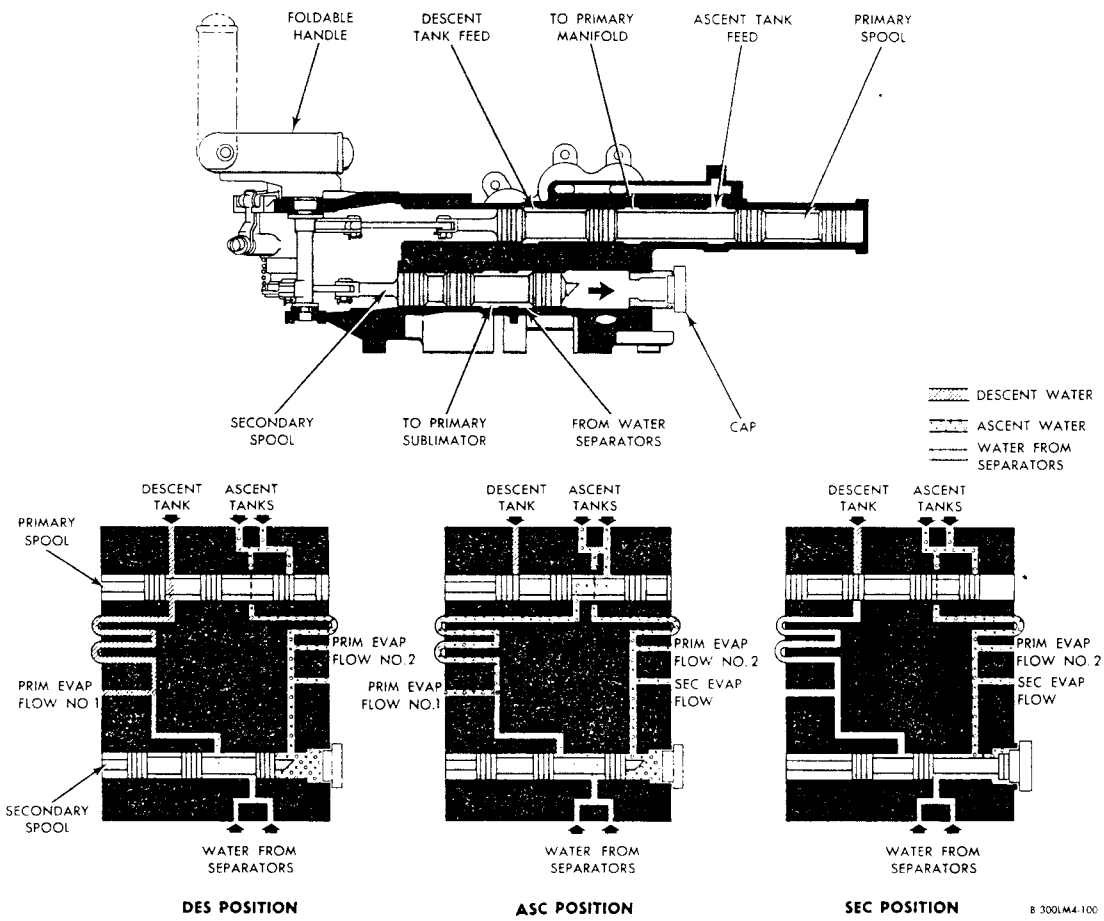

Figure 2.6-22. Water Tank Selector Valve - Functional Schematic

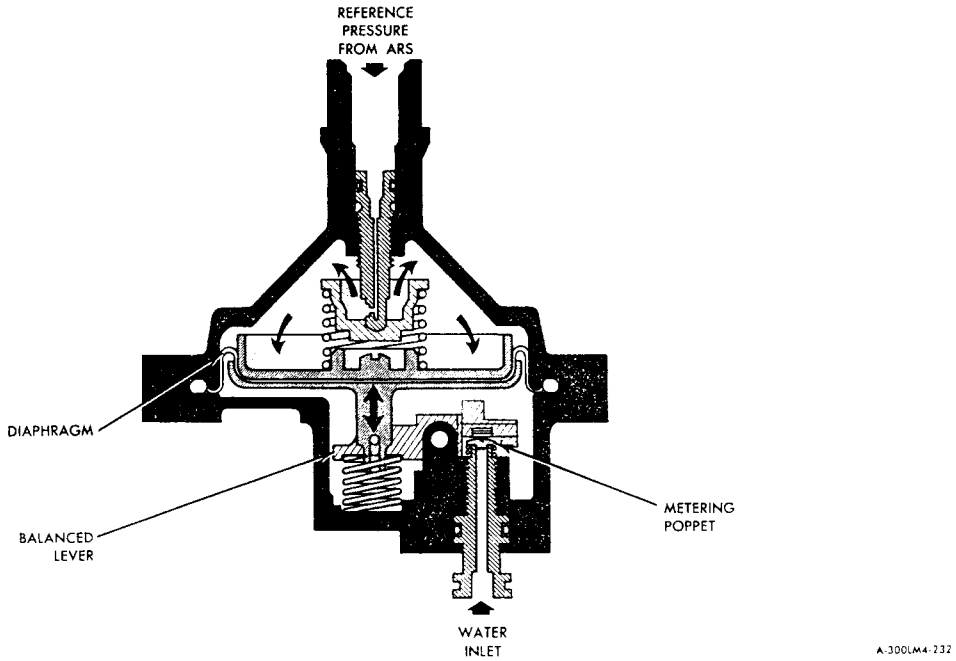

Figure 2.6-23. Water Pressure Regulator - Functional Schematic

The accumulators have a low-level sensor with a switch that trips when only 10±5% of the coolant volume remains. The switch is mounted on top of the accumulator. A tube extending from the top of the accumulator, houses a rod attached to the piston. The switch provides a telemetry signal.

2.6.4.4.2 Coolant Filters.

The primary coolant filter has a filtering capability of 35 microns absolute. It has a pressure relief bypass that opens at 0.27 to 0.4 psid to maintain coolant flow to the pumps if the filter becomes clogged. The secondary coolant filter has a filtering capability of 45 microns absolute. It also has an integral pressure relief valve, which opens at 0.8 to 1.0 psid to maintain coolant flow to the secondary pump if the filter becomes clogged.

2.6.4.4.3 Coolant Pumps.

The three coolant pumps are identical. Two pumps are connected in the primary loop; the third pump in the secondary loop. The pumps are of the sliding-vane, positive-displacement type; they are driven by 28-volt d-c brushless motors. The motors are of wet or submerged design and are cooled by the recirculating coolant.

With a fixed system configuration, pump speeds vary with changes in coolant temperature and pump input voltages. As a result, system coolant flow rates may vary from 4.4 to 5.4 pounds per hour, causing a primary pump pressure rise of 12 to 25 psi and secondary pump pressure rise of 8 to 18 psi. Pump inlet pressure varies from 5 to 8 psia, depending on accumulator level.

2.6.4.4.4 Suit Temperature Control Valve.

The SUIT TEMP valve is a manually operated diverter valve. The amount of warm coolant flowing through the suit circuit regenerative heat exchanger is regulated by the handle, which can be turned from HOT to COLD.

2.6.4.4.5 Sublimators.

The porous-plate-type sublimators (one in the primary loop and another in the secondary loop) are identical, except that the primary sublimator has a larger capacity. Each sublimator has a coolant inlet and outlet, a water inlet, and a steam outlet. Water makes one pass through the unit; coolant makes six passes through the primary sublimator and four passes through the secondary sublimator. For proper sublimator operation, water pressure must exceed 4.0 psia but must be less than 6.5 psia. However, the primary sublimator can withstand a transient fluctuation to 10.6 psia during the suit pressure integrity test, for a period of 5 minutes. The water pressure must also be less than the suit circuit static pressure plus the head pressure from the water separators to the sublimator.

The unit rejects heat to space by sublimation of ice. Water from the WMS flows through the water passages, into the porous plates, and is exposed to space environment. The vacuum pressure is below the triple point of water; this causes an ice layer to develop within the pores and on the inner surface of the plates. As the hot coolant flows through the sublimator passages, heat transfers from the

coolant to the water and to the ice layer. The ice sublimates from the solid state to steam without passing through a liquid state, rejecting its heat load overboard through a duct. The thickness of the ice layer varies with the heat load imposed on the sublimator, resulting in a regulated output temperature over a range of input temperatures.

If the heat load entering the sublimator drops below its low limit, the ice layer expands and may completely fill the water passages. The expanding ice layer may rupture the sublimator. If the heat load is too high, the ice layer melts. If the water pressure is too high, a breakthrough of the ice layer may occur, forcing water through the porous plates. In these cases, heat rejection by the sublimator is greatly reduced because ice is not sublimated. Water consumption is excessive because there is no restraining ice layer.

2.6.4.4.6 Flat Cold Plates and Cold Rails.

Electronic equipment that requires active temperature control is cooled by cold plates and cold rails. Most cold plates are installed between electronic equipment and the LM structure in a manner that minimizes heat transfer from the structure to the coolant, to avoid a reduction of the coolant cooling capacity. The surrounding structure and equipment may have a temperature range of 0° to $+160^{\circ}$ F. The remaining flat cold plates are installed directly on the electronic equipment without making contact with the LM structure. Cold rails are used in the aft equipment bay, in the descent stage and in the DSEA. The IMU has an integral cooling circuit. Cold plates and cold rails for equipment essential for mission abort have two independent coolant passages, one for the primary loop and one for the secondary loop.

The flat cold plates are brazed assemblies with inlet and outlet fittings. The coolant flows between two parallel sheets, which are connected by fins for increased heat transfer and structural strength. The internal fin arrangement of the cold plates ensures sufficient flow distribution.

The cold rails are channel-and-tube type extrusions; the tubular part forms the inside center of the channel. The tube has fins and, at the ends, coolant inlet and outlet fittings. The cold rails are installed in a parallel arrangement, with equal space between the rails to accommodate equipment designed for mounting on cold rails. Each cold rail (except the first and the last one) cools two adjacent rows of equipment.

To increase heat transfer in a space environment, an interface material is used between the electronic equipment (except the DSEA) and the cold plates or cold rails. The interface material (silicone rubber with an aluminum oxide additive) is applied in liquid form to the equipment surface before installation and is vulcanized at room temperature after the equipment is mounted. Electronic replaceable assemblies can be installed on, and removed from, their cold plates or cold rails without disturbing the coolant circuit. Repeated removal and installation requires removal of old, and application of new, interface material. The IMU has flexible line connections and quick-disconnects to facilitate IMU replacement, if required.

2.6.5 PERFORMANCE AND DESIGN DATA.

The performance and design data for the ARS, OSCPS, WMS, and HTS are given in table 2.6-1.

Table 2.6-1. Environmental Control Subsystem - Performance and Design Data

Atmosphere revitalization section	
Oxygen partial pressure in atmosphere breathed by astronauts	160 mm Hga (minimum)
Carbon dioxide partial pressure in atmosphere delivered to astronauts	6.75 mm Hga (maximum)
Cabin pressure	4.8±0.2 psia (normal, steady-state)

Table 2.6-1. Environmental Control Subsystem - Performance and Design Data (cont)

Atmosphere revitalization section (cont)	
Suit circuit pressure	
Cabin mode	4.8±0.2 psia (may exceed 5.0 psia during powered flight)
Egress mode	3.8±0.2 psia (4.7 psia maximum during powered flight)
Minimum	3.5 psia
Maximum	9.6 psia and 5.0 psia (with one oxygen demand regulator failed open)
During EMU checkout (measured downstream of PGA's)	8.7 psia (3.7 psig) for 5 minutes
LiOH dust concentration in atmosphere delivered to astronauts	0.02 mg per cubic meter (maximum)
Leakage	
ARS external leakage (with CO_2 and odor removal canister closed, exclusive of PGA's)	0.01 pound per hour (maximum) at 3.7-psia suit pressure with cabin unpressurized
Suit (one man)	0.035 pound per hour (maximum) with cabin unpressurized
Suit inlet temperature range	
Gas cooled mode	With SUIT TEMP valve in full COLD position, temperature ranges from +38° to +65° F; in full HOT position, from +42° to +100° F. Under certain maximum operating conditions suit inlet temperature may exceed +100° F.
Liquid cooled mode	Within 7° F of HTS glycol temperature at liquid circuit cooling package inlet.
Cabin temperature	+55° to +90° F.
Relative humidity	40% to 80%
Suit circuit fan flow	At 4.8 psia - 36.0 pounds per hour (minimum) At 3.8 psia - 28.4 pounds per hour (minimum)
LCG flow	At 5.65 psid - 4.0 pounds per minute (nom) (1.9 pounds per minute minimum each suit)
Oxygen supply and cabin pressure control section	
Suit pressure increase	First 1-psi increase may occur in less than 1 second. Each succeeding 1-psi increase occurs in not less than 8 seconds.
Cabin repressurization and emergency oxygen valve delivery rate	
Descent mode	4 pounds per minute (maximum)
Ascent mode	8 pounds per minute at 700 psia
PLSS refill	1.60 pound/refill at 1430 psia Can only be partially filled at lower pressures

Table 2.6-1. Environmental Control Subsystem - Performance and Design Data (cont)

Oxygen supply and cabin pressure control section (cont)	
Oxygen regulator flow capability	Oxygen regulators are capable of sufficient flow to maintain minimum suit circuit pressure of 3.5 psia with SUIT CIRCUIT RELIEF valve failed open and with 550 psia and +130° F at oxygen control module inlet.
Cabin volume	195 cubic feet
Oxygen filter efficiency	40 microns absolute
Cabin-to-ambient pressure differential	5.8 psi (maximum) steady state
Manual cabin pressure dump rate (without oxygen inflow)	One dump valve from 5.0 psia down to 0.08 psia in 180 seconds. Both valves in 90 seconds.
Number of cabin repressurization	4 at 5.5 pounds each
Cabin repressurization time	≈ 2 minutes
Cabin pressure switch settings	When cabin pressure drops to 3.7 to 4.45 psia, contacts close
	When cabin pressure increases 4.40 to 5.0 psia, contacts open
Descent oxygen tanks	
Capacity	48.01 pounds (each tank) at 2690 psia and +70° F (residual oxygen: 0.84 pound, each tank at 50 psia and +70° F)
Burst pressure	4,500 psi
Ascent oxygen tanks	
Capacity	2.43 pounds (each tank) at 840 psia and 70° F (residual oxygen: 0.14 pounds, each tank, at 50 psia and +70° F)
Burst pressure	1,500 psia
Gaseous oxygen pressures and temperatures	
Normal pressure (regulated)	900^{+60}_{-25} psia
Normal pressure (unregulated)	50 to 960 psia
Maximum pressure	1,100 psia
Normal temperature	0° to +160° F
Leakage	
Oxygen supply components	Total external leakage of all oxygen supply components, under maximum operating pressures, does not exceed 0.010 pound per hour of oxygen.

Table 2.6-1. Environmental Control Subsystem - Performance and Design Data (cont)

Oxygen supply and cabin pressure control section (cont)	
Leakage (cont)	
Cabin relief and dump valve	0.005 pound per hour (maximum) for each valve, up to 5.25 psid
Cabin	0.2 pound per hour (maximum) at 5.0 psia and +75° F
Bypass relief valve	
Full flow pressure	3,030 psig (minimum) at +75° F
Cracking pressure	2,875 psig (maximum) at +75° F
Reseat pressure	2,850 psig (minimum) at +75° F
Overboard relief valve	
Full flow pressure	1,090 psig (maximum) at 75° F
Cracking pressure	1,025 psig (minimum) at +75° F
Reseat pressure	985 psig (minimum) at +75° F
High-pressure regulator	
Outlet pressure with primary and secondary regulators operating normally	At inlet pressure of 1,100 to 3,000 psig and flow of 0.1 to 4.0 pounds per hour, and inlet pressure of 975 to 1,100 psig and flow of 0.1 pound per hour will regulate to:

Normal downstream regulated pressure (psig)

Temp (° F)	Minimum Pressure	Maximum Pressure
75	875	960

Downstream regulated pressure with failed-open primary regulator (psig)

Temp (° F)	Minimum Pressure	Maximum Pressure
75	875	960

Downstream regulated pressure with failed open secondary regulator (psig)

Temp (° F)	Minimum Pressure	Maximum Pressure
75	875	960

Water management section	
Descent water tanks	
Capacity	333 pounds (each tank) at 0.75 fill ratio
Initial fill pressure	48.2 psia (maximum) at +80° F
Residual	6.66 pounds (each tank)
Pressure upon expulsion of all expellable water	11.0 psia (minimum) at +35° F

Table 2.6-1. Environmental Control Subsystem - Performance and Design Data (cont)

Water management section (cont)	
Ascent water tanks	
Capacity	42.5 pounds (each tank) at 0.75 fill ratio
Initial fill pressure	48.2 psia (maximum) at +80° F
Residual	0.85 pounds (each tank)
Pressure upon expulsion of all expellable water	11.0 psia (minimum) at +35° F
External leakage	
Normal mode (exclusive of sublimator in HTS primary loop)	0.700 cc/hr of water (maximum) at 50 psid and +70° F
Redundant mode (exclusive of sublimator in HTS secondary loop)	0.350 cc/hr of water (maximum) at 50 psid and +70° F
Sublimator in HTS primary loop	0.090 cc/hr of water (maximum combined) at 6.5 psid and +70° F
Sublimator in HTS secondary loop	0.090 cc/hr of water at 6.5 psid and +70° F
External-to-internal leakage ground service disconnects	1×10^{-2} scc/hr of helium (maximum each) at internal pressure of 500 microns and in helium ambient of 14.7 psia and +70° F
Pressure regulator discharge pressure	0.5 to 1.0 psi above ARS gas pressure
PLSS refill (each)	9.15 pounds of water
Heat transport section	
Coolant	Solution of ethylene glycol and water (35% and 65%, respectively, by weight) with inhibitors (triethanolamino phosphate, to prevent decomposition; sodium mercaptobenzothiozol, to prevent electrolytic corrosion) Approximately 35 pounds of coolant is used in HTS.
Coolant slush point	-3° F
External leakage	
Primary coolant loop	1.12×10^{-2} cc/sec of helium (maximum) at 45 psid and +70° F
Secondary coolant loop	1.0×10^{-3} cc/sec of helium (maximum) at 45 psid and +70° F
Coolant pump rated flow	222 pounds per hour minimum at +40° F and 30 psid and 28-vdc input

Table 2.6-1. Environmental Control Subsystem - Performance and Design Data (cont)

Heat transport section (cont)	
Coolant pump bypass relief valve	
Cracking pressure	35 psi (minimum)
Full open pressure	40 psi (maximum)
Reseat pressure	1 psi less than cracking pressure
Coolant temperatures	+29° to +120° F
Vacuum fill requirements	HTS withstands internal pressure of 500 microns in sea-level ambient pressure environment.
Primary and secondary coolant filters	
Efficiency	35 microns absolute for primary 45 microns absolute for secondary
Bypass valve maximum cracking pressure	0.4 psid for primary 1.0 psid for secondary
Coolant flow	
Primary coolant loop	222 pounds per hour (minimum)
Secondary coolant loop	222 pounds per hour (minimum)
Cold plates/cold rails	
Coolant inlet operating temperature	+32° to +100° F
Coolant inlet operating pressure	5 to 45 psia
Coolant inlet operating flow	12 to 85 pounds per hour, depending on cold rail/cold plate size and heat transfer requirements

2.6.6 OPERATIONAL LIMITATIONS AND RESTRICTIONS.

The operational limitations and restrictions for the ECS are as follows:

- The suit fans and cabin fan must be operated at a reduced voltage of 12 to 15 volts dc in earth ambient pressure, to prevent damage to the motors.
- The glycol pumps must be operating before water from the WMS or water separators is permitted to flow to the sublimators. Sublimators require minimum heat load to prevent freeze-up.
- The HTS must be stabilized at operating temperatures before IMU or LM guidance computer operation, to prevent erroneous and changing operation during temperature cycling resulting in invalid outputs.
- One suit fan must be on when the astronauts are on LM ECS; otherwise, atmosphere will not be reconditioned, leading to possible loss of consciousness.

- The LiOH cartridge of the primary canister must be replaced with a new cartridge when carbon dioxide partial pressure, as indicated on the PART PRESS CO_2 indicator, reaches 7.6 mm Hg.

- The cabin fan must be turned off manually when cabin pressure drops below 3.0 psia (in cabin mode); otherwise, it may be damaged.

- A minimum total heat load of 800 Btu/hr must be maintained when the primary water feed is on; otherwise, the sublimator may freeze and rupture, rendering the primary coolant loop inoperative. The heat loads result from crew activity, LiOH reaction, structural load, and equipment and battery heat loads.

- The temperature of the coolant flow to temperature-critical electronics must not exceed +50° F. Overheating may result and lead to degraded performance of critical equipment.

- Nominally, minimum total heat load of 755 Btu/hr must be maintained when the secondary water feed is on; otherwise, the sublimator may freeze and rupture, rendering the HTS inoperative. During off-nominal or contingency situations, the minimum heat load is 140 Btu/hr for continuous operation.

2.7 COMMUNICATIONS SUBSYSTEM.

2.7.1 INTRODUCTION

The Communications Subsystem (CS) provides inflight and lunar surface communications links between the LM, CSM, and the Manned Space Flight Network (MSFN), and between the LM and extravehicular astronaut (EVA). When the LM is on the lunar surface and both astronauts are outside the LM, the LM relays communications between the astronauts and MSFN. When the astronauts are in the lunar roving vehicle (LRV), the Lunar Communications Relay Unit (LCRU) mounted on the LRV is the communications relay. The following types of information can be handled by the CS.

- S-band tracking and ranging
- Transponding of VHF ranging signals
- Voice (LM-EVA, LM-CSM, or LM-MSFN)
- PCM telemetry (LM status)
- Astronaut biomedical data
- LGC update (up data)
- Emergency key (Morse code)
- Television
- EVA-LM Extravehicular Communications System (EVCS) data
- LM-CSM telemetry data (for retransmission to MSFN)

In flight, when the LM is separated from the CSM and both vehicles are on the earth side of the moon, the CS provides S-band communications with MSFN, and VHF communications with the CSM. When the LM and CSM are on the far side of the moon and communication with MSFN is impossible, the CS provides VHF communications with the CSM.

In-flight S-band communications between the LM and MSFN while the LM is on the earth side of the moon, include voice, digital uplink signals, and ranging code signals from MSFN. The LM S-band equipment transmits voice, acts as transponder to the ranging code signals, transmits biomedical and systems telemetry data, and provides a voice backup capability and an emergency key capability.

In-flight VHF communications between the LM and CSM while they are on the earth side of the moon include voice, backup voice, and tracking and ranging signals. Normal LM-CSM voice communications use VHF channel A simplex. Backup voice communication is accomplished with VHF channel B simplex. VHF ranging, initiated by the CSM, uses VHF channels A and B duplex.

When the LM and CSM are behind the moon and communication with MSFN is impossible, VHF channel A is used for simplex LM-CSM voice communications. VHF channel B is used as a one-way data link to transmit system telemetry signals from the LM, to be recorded and stored by the CSM. When the CSM establishes S-band contact with MSFN, the stored data are transmitted by the CSM at 32 times the recording speed.

When the LM is on the lunar surface, the CS provides S-band communications with MSFN and VHF communications with the EVA. The LM relays VHF signals to MSFN, using the S-band. Communications with the CSM may be accomplished by using MSFN as a relay. LM-MSFN S-band capabilities are the same as in-flight capabilities, except that, in addition, TV may be transmitted from the lunar surface in an FM mode.

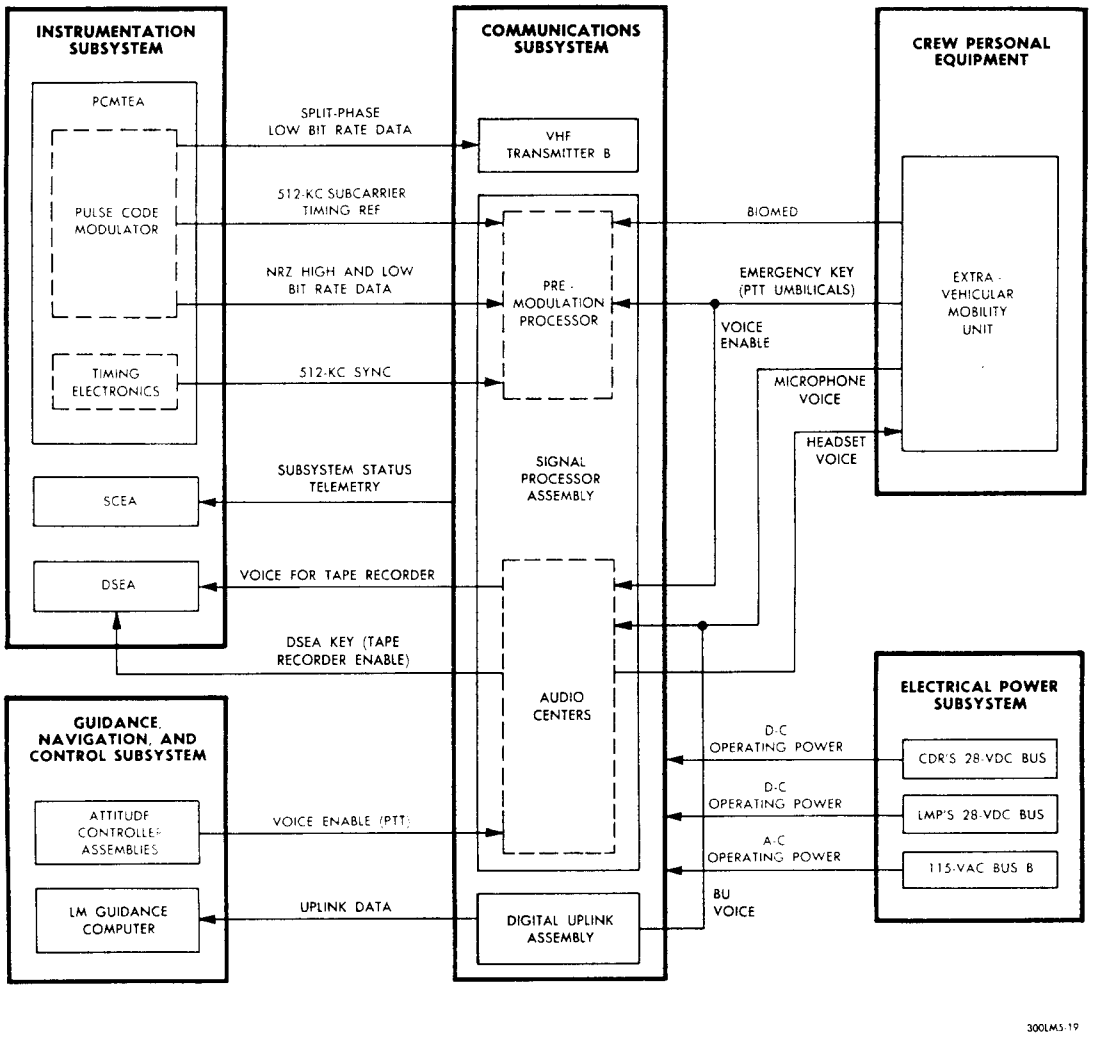

Figure 2.7-1. Communications Subsystem - Interface Diagram

2.7.2 SUBSYSTEM INTERFACES. (See figure 2.7-1.)

The CS interfaces with the Electrical Power Subsystem (EPS) for primary a-c and d-c power. D-C operating power (28 volts) is supplied to the CS from the Commander's and LM Pilot's d-c buses; a-c power (115 volts, 400 cps), from a-c bus B. Redundant CS operating equipment is connected to separate d-c buses, thereby assuring an operational status if either primary d-c bus becomes inoperative.

Telemetry data are routed to the CS from the Instrumentation Subsystem (IS) in nonreturn-to-zero (NRZ) form at a high or low bit rate. These data are fed through the S-band network for transmission to MSFN. When line of sight with MSFN is lost, these data are fed through VHF transmitter B

to the CSM, but VHF B uses only low-bit, split-phase data format. The IS supplies two 512-kc signals to the premodulation processor (PMP), a part of the signal-processor assembly (SPA). One signal is the 512-kc sync signal from the timing electronics equipment (TE), a part of the pulse-code-modulation and timing electronics assembly (PCMTEA). This signal is used for subsequent generation of the 1.25-mc subcarrier. The other signal is the 512-kc subcarrier timing reference signal from the PCMTEA, which is used to generate the 1.024-mc subcarrier. The data storage electronics assembly (DSEA) of the IS provides a voice-recording capability, receiving its input from either audio center's intercommunications system (ICS) bus.

The Commander's and LM Pilot's attitude controller assemblies (ACA's) of the Guidance, Navigation, and Control Subsystem (GN&CS) each have a push-to-talk (PTT) switch for enabling the SPA audio centers, permitting voice communications. A PTT pushbutton on each astronaut's electrical umbilical also enables the SPA audio centers, permitting voice communications. These PTT pushbuttons also provide an enabling signal for the PMP in the SPA if emergency key mode is selected.

Voice signals are generated and received in the astronaut's communications carrier (headset) and are wired to the SPA for appropriate routing. Biomedical sensors in the astronaut's pressure garment assembly (PGA) continuously generate electrical analogs pertinent to heart beat. This signal is fed directly to the PMP for processing and subsequent transmission to MSFN.

2.7.3 FUNCTIONAL DESCRIPTION. (See figure 2.7-2.)

2.7.3.1 General.

The CS includes all S-band, VHF, and signal-processing equipment necessary to transmit and receive voice, and tracking and ranging data, and to transmit telemetry and emergency keying. Voice communications between the LM and MSFN are provided by the S-band transmitter-receiver assemblies, and between the LM and CSM by VHF transmitter-receiver assemblies. Telemetry data are transmitted to MSFN via S-band, which also provides MSFN-LM ranging and tracking functions. VHF provides ranging and tracking functions between the CSM and the LM. The communications links provided by the CS, and their functions, are listed in table 2.7-1.

A digital uplink assembly (DUA) updates the LM guidance computer (LGC). It receives data from the S-band transmitter-receiver in a serial digital format, decodes the data, and transfers the decoded data to the LGC. The DUA also provides S-bank uplink voice backup capability if the S-band demodulator circuits in the PMP fail.

The ranging tone transfer assembly (RTTA) acts as a transponder to allow CSM-LM ranging. The RTTA is used with the VHF transceivers.

2.7.3.2 Power Distribution.

The CS receives primary electrical power from the EPS: d-c power from the Commander's and LM Pilot's d-c buses; a-c power, from a-c bus B. The normal d-c voltage requirement for all major CS assemblies is 28 volts, two-wire, negative ground. The required steady-state d-c range is 25 to 31.5 volts; the off-nominal range, 20 to 32 volts for periods not exceeding 5 seconds. The CS requires 115-volt, 400-cps a-c power for the S-band steerable antenna electronics package. All operating power is supplied to the CS through circuit breakers. Figure 2.7-3 shows all EPS circuit breakers relevant to the CS, major CS assemblies, and related power switches (panel 12).

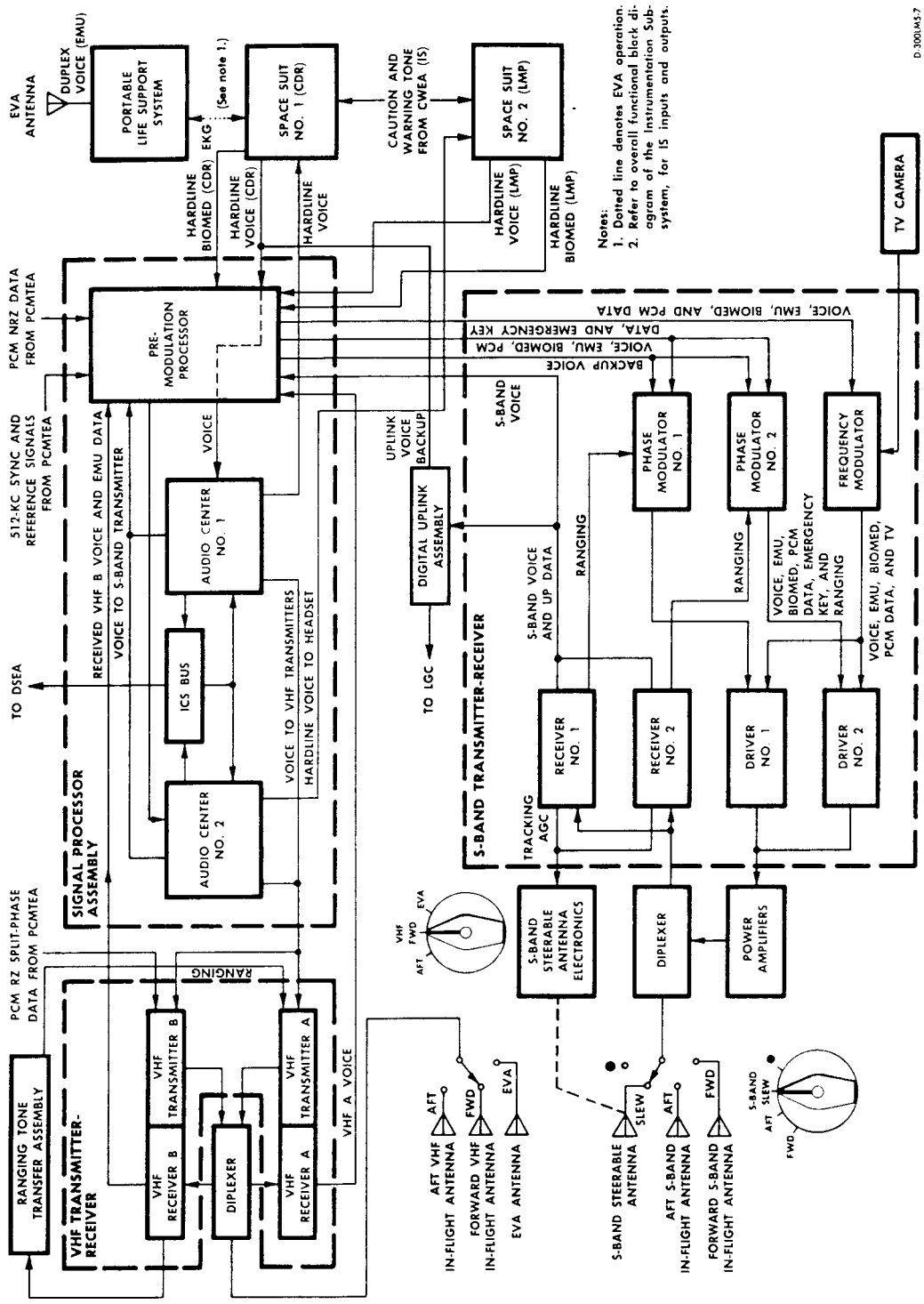

Figure 2.7-2. Communications Subsystem - Simplified Block Diagram

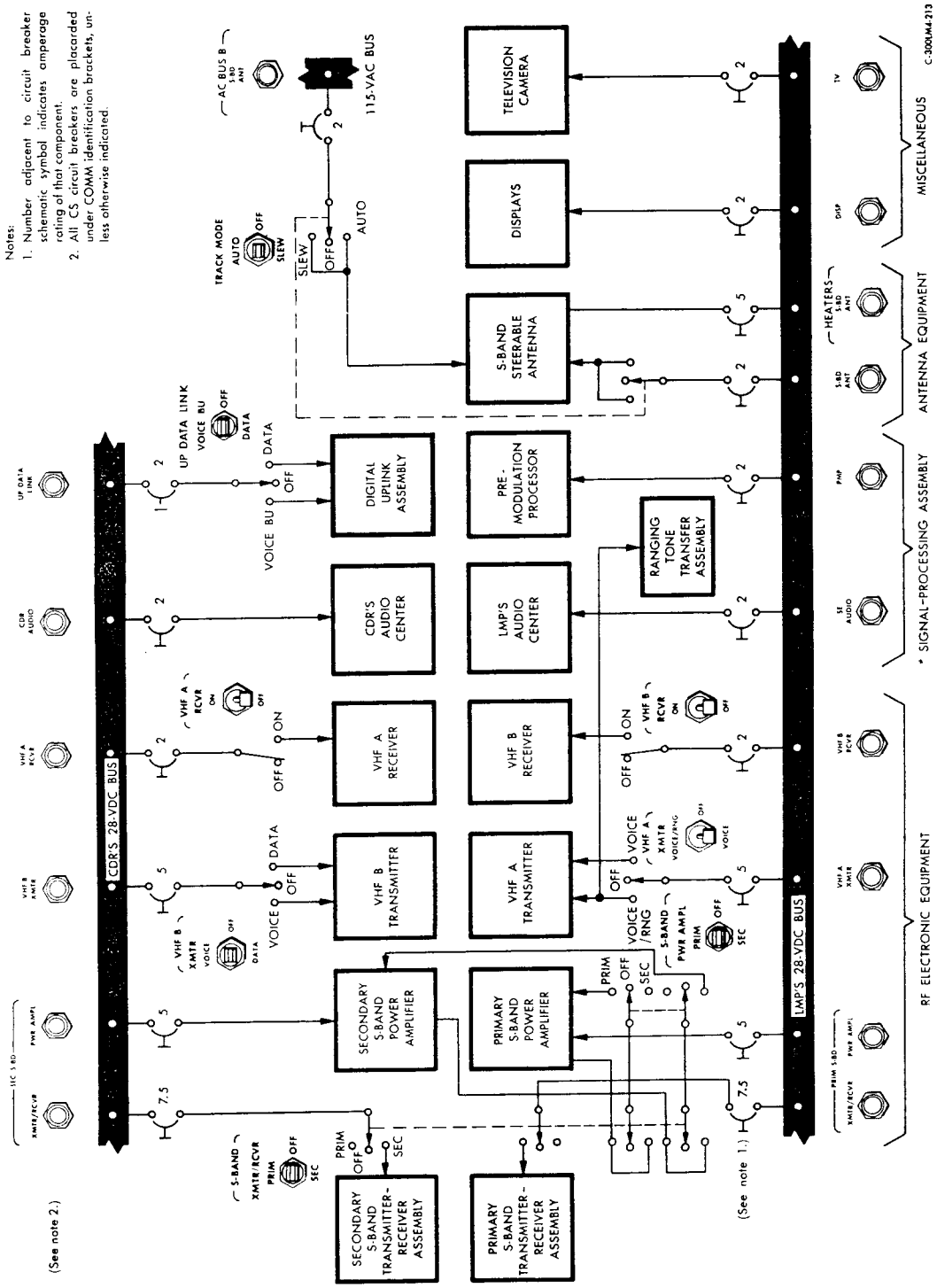

Figure 2.7-3. Communications Subsystem - Power Distribution Diagram

Table 2.7-1. Communications Links

Link	Mode	Band	Purpose
MSFN-LM-MSFN	Pseudorandom noise	S-band	Ranging and tracking by MSFN
LM-MSFN	Voice	S-band	In-flight communications
LM-CSM	Voice	VHF simplex	In-flight communications
CSM-LM-MSFN	Voice	VHF and S-band	Conference (with LM as relay)
LM-CSM	Low-bit-rate telemetry	VHF (one way)	CSM record and retransmit to earth
CSM-LM-CSM	Ranging	VHF duplex	Ranging by CSM
MSFN-LM	Voice	S-band	In-flight communications
MSFN-LM	Uplink data or uplink voice backup	S-band	Update LGC or voice backup for in-flight communications
LM-MSFN	Biomed-PCM telemetry	S-band	Transmission of biomed and vehicle status data
LM-MSFN-CSM	Voice	S-band	Conference (with earth as relay)
EVA-LM-EVA	Voice and data; voice	VHF duplex	EVA direct communication
EVA-LM-MSFN	Voice and data	VHF, S-band	Conference (with LM as relay)
CSM-MSFN-LM-EVA	Voice and data	S-band, VHF	Conference (via MSFN-LM relay)

2.7.3.3 Voice Operation.

All voice communications are accomplished through the astronaut's microphone and headset equipment. Voice communication is used between the LM and the CSM; between the LM and MSFN; between the LM, CSM, and MSFN (conference); and between the astronauts. (See figure 2.7-4.) Each astronaut has an audio center subassembly (part of the SPA), which serves as the common acquisition and distribution center for his voice communications. Each astronaut controls audio volume to his headset with his VOLUME thumbwheels (panel 8 or 12). Depending on the selected mode of operation, voice is transmitted to MSFN or the CSM, or stored on tape in the DSEA. Voice transmission is initiated with the PTT switches or the voice-operated relay (VOX) circuit. In addition, a hot-microphone capability exists for intercom only.

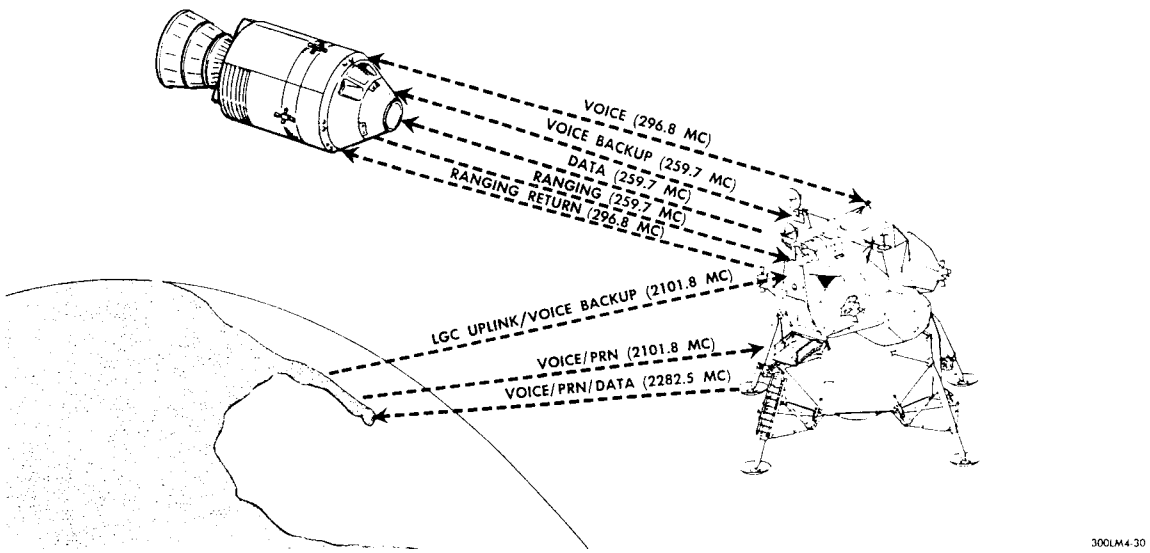

Figure 2.7-4. In-Flight Communications

2.7.3.4 Data Operations.

Transducers sense physical data from all subsystems and convert the data into electrical outputs acceptable to the IS. The data are transmitted to MSFN, in pulse-code-modulation (PCM) form. Biomedical (biomed) analog data from sensors worn by the astronauts are also transmitted to MSFN.

The IS processes signals supplied by the transducers, converts them to digital form, and routes them serially to the CS for transmission to MSFN or the CSM. These data, in PCM form, are transmitted at one of two data rates: 51.2 kilobits per second (high bit rate) or 1.6 kilobits per second (low bit rate). Transmission to MSFN is accomplished via the S-band FM or PM transmitters at either data rate. (See figure 2.7-4.) The PCM data are also transmitted, at the low bit rate only, to the CSM via the 259.7-mc transmitter in the CS during loss of LOS between the LM and MSFN. The CSM records these data for subsequent retransmission to MSFN.

2.7.3.5 Ranging and Tracking.

LM S-band ranging and tracking equipment enables MSFN to determine accurately, by triangulation, the angular position and range of the LM with respect to earth. In addition, VHF ranging equipment enables the CSM to determine accurately the range and range rate of the LM with respect to the CSM.

The S-band transponder receives coded PRN signals from MSFN. These signals are routed to the selected PM transmitter for in-phase-coherence transmission back to MSFN. S-band transmission is at 2282.5 mc; reception at 2101.8 mc.

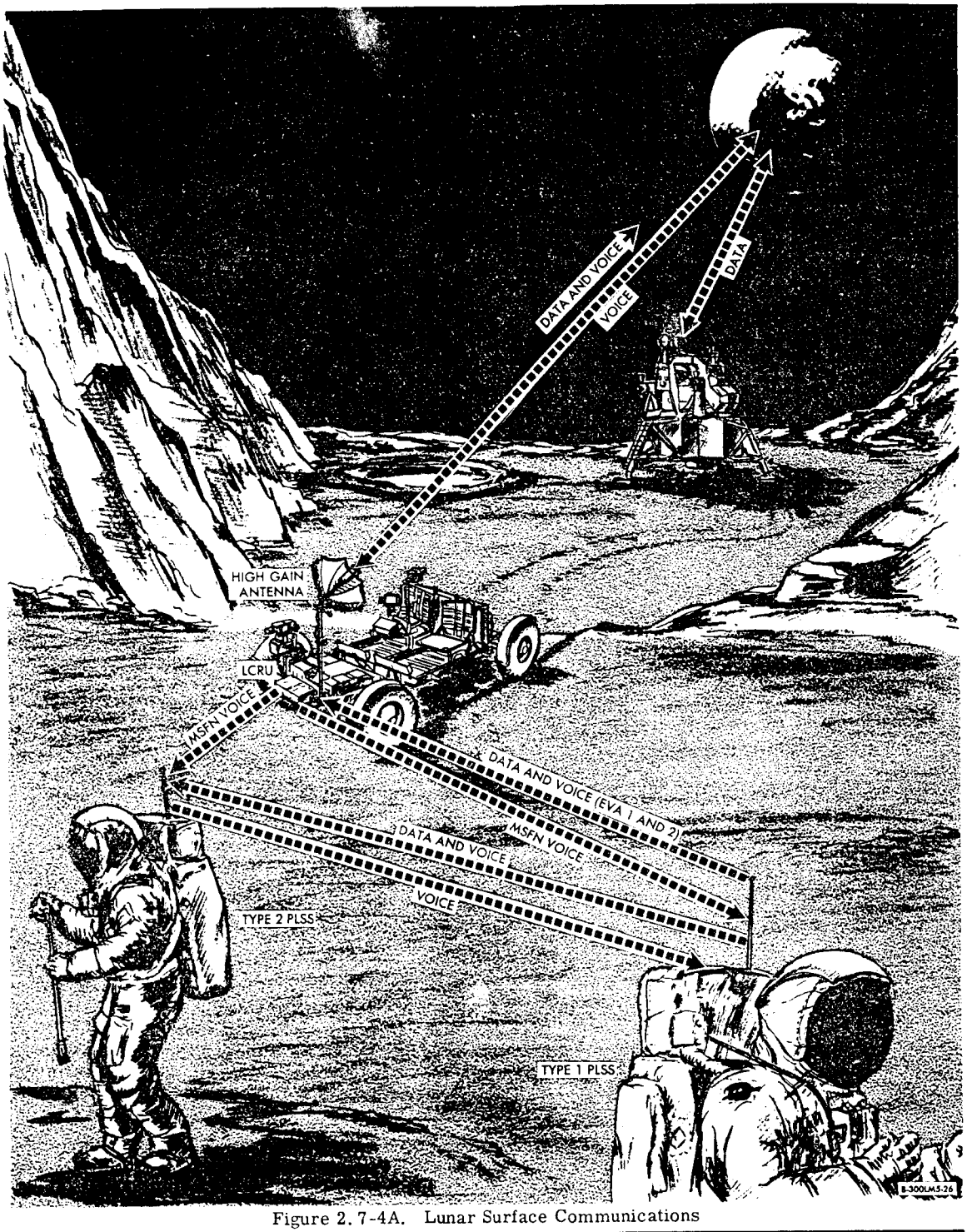

Figure 2.7-4A. Lunar Surface Communications

The S-band tracking and ranging function uses the Doppler frequency shift caused by LM high velocity rates, to track the LM. The coded PRN signal transmitted by MSFN is received by a receiver with a phase-locked loop, and retransmitted to MSFN. The retransmitted signal received by MSFN is compared with the originally transmitted signal. Range is determined by the time it takes for the signals to travel from MSFN to the LM and back to MSFN. Once the range has been established accurately by the PRN code, the code is discontinued and range is updated continuously by the Doppler technique. The phase-locked loop in the LM receiver ensures accuracy of the tracking signals (Doppler) by comparing the phase of the received signal with the phase of a local-oscillator output in the detector stage. (See figure 2.7-7.) The output voltage of the detector, which is proportional to the phase difference between the two signals, is applied to the local oscillator. This signal is applied as a control voltage to alter the local-oscillator frequency to bring it in phase with the received MSFN signal.

The VHF tracking and ranging function uses the round trip time delay of tones transmitted by the CSM to the LM and transponded by the LM back to the CSM.

2.7.3.6 Subsystem Operation.

The normal switch and circuit breaker positions for the communications modes are listed in table 2.7-2. If a switch or circuit breaker is not listed for a particular mode, that mode is not influenced by that switch or circuit breaker. The switch positions listed are for prime positions. In some cases, more than one position functions as a prime position; all such positions are indicated.

2.7.4 MAJOR COMPONENT/FUNCTIONAL DESCRIPTION.

The CS is divided into three groups: RF electronic equipment, signal processing equipment, and antenna equipment.

CS

2.7.4.1 RF Electronic Equipment.

The RF electronic equipment includes all subsystem equipment required for transmission and reception of audio, video, ranging, and telemetry data. The antennas mentioned in the discussion of the RF electronic equipment are covered in paragraph 2.7.4.3.

2.7.4.1.1 S-Band Transmitter-Receiver Assembly. (See figure 2.7-5.)

The S-band transmitter-receiver assembly provides deep-space communications between the LM and MSFN. S-band communications consist of voice and PRN transmission from MSFN to the LM, and voice, PRN turnaround, biomed, and subsystem data transmission from the LM to MSFN. The S-band communications capabilities are listed in table 2.7-3.

The S-band transmitter-receiver assembly consists of two identical phase-locked receivers, two phase modulators with driver and multiplier chains, and a frequency modulator. The receivers and phase modulators provide the ranging, voice, emergency-keying, and telemetry transmit-receive functions. The frequency modulator is provided primarily for video transmission, but accommodates PCM telemetry (subsystem data), biomed, and voice transmission. The frequency modulator provides limited backup for both phase modulators. The operating frequencies of the S-band equipment are 2282.5 mc (transmit) and 2101.8 mc (receive).

The frequency modulator (figure 2.7-6) uses a voltage-controlled oscillator (VCO), operating at 76 mc, as the basis of its RF circuit. The FM transmitter is modulated by an input within a 10-cps to 1.5-mc range. A portion of the VCO output is routed through a series of frequency divider networks that reduce the frequency to 9.2 kc. This frequency is compared to the output (also reduced to 9.2 kc) of a 4.7-mc crystal oscillator, in a phase detector. The two inputs to the phase detector are normally 90° out of phase. The phase difference is represented as a voltage at the phase detector output and is used to control VCO frequency stability. The frequency modulator output is then supplied to the selected driver and multiplier chain for transmission through the S-band power amplifier, diplexer, and selected S-band antenna to MSFN.

Table 2.7-2. Communications Subsystem - General Switch and Circuit Breaker Configuration

Switches and Circuit Breakers	S-Band Voice	PRN Ranging	S-Band Telem-etry	Hard-line-Biomed	S-Band Voice BU (Downlink)	Emer-gency Key	TV	VHF A Sim-plex	VHF B Sim-plex	VHF B Telem-etry	VHF A/B Duplex (LM/CSM)
Panel 8 (AUDIO)											
S-BAND T/R switch	S-BAND T/R	OFF	OFF	OFF	S-BAND T/R	OFF	OFF	OFF	OFF	OFF	OFF
ICS T/R switch	ICS T/R or OFF	OFF	OFF	OFF	ICS T/R or OFF	OFF	OFF	ICS/TR or OFF	ICS T/R or OFF	OFF	ICS T/R or OFF
VHF A switch	OFF	OFF	OFF	OFF	OFF	OFF	OFF	T/R	OFF	OFF	T/R
VHF B switch	OFF	OFF	OFF	OFF	OFF	OFF	OFF	OFF	T/R	OFF	OFF
RELAY ON switch (See note 1.)	RELAY OFF	OFF	(See note 1. Only one RELAY ON switch can be set to RELAY ON at a time.)					OFF	OFF	OFF	OFF
MODE switch (See note 2.)	VOX	OFF	OFF	OFF	OFF	OFF	OFF	VOX	VOX	OFF	VOX
AUDIO CONT switch	NORM	NORM	NORM	NORM	NORM	NORM	NORM	NORM	NORM	NORM	NORM
Panel 12 (AUDIO)											
S-BAND T/R switch	S-BAND T/R	OFF	OFF	OFF	S-BAND T/R	OFF	OFF			OFF	
ICS T/R switch	ICS T/R or OFF	OFF	OFF	OFF	ICS T/R or OFF	OFF	OFF	ICS T/R or OFF	ICS T/R or OFF	OFF	ICS T/R or OFF
VHF A switch	OFF	OFF	OFF	OFF	OFF	OFF	OFF	T/R	OFF	OFF	OFF
VHF B switch	OFF	OFF	OFF	OFF	OFF	OFF	OFF	OFF	T/R	OFF	RCV
RELAY ON switch (See note 1.)	RELAY OFF	OFF	(See note 1. Only one RELAY ON switch can be set to RELAY ON at a time.)					OFF	OFF	OFF	OFF
MODE switch	VOX	OFF	OFF	OFF	VOX or PTT	OFF	OFF	VOX	VOX	OFF	VOX
AUDIO CONT switch	NORM	NORM	NORM	NORM	NORM	NORM	NORM	NORM	NORM	NORM	NORM

Table 2.7-2. Communications Subsystem - General Switch and Circuit Breaker Configuration (cont)

Switches and Circuit Breakers	S-Band Voice	PRN Ranging	S-Band Telem-etry	Hard-line Biomed	S-Band Voice BU (Downlink)	Emer-gency Key	TV	VHF A Sim-plex	VHF B Sim-plex	VHF B Telem-etry	VHF A/B Duplex (LM/CSM)
UP DATA LINK switch	OFF	OFF	OFF	OFF	VOICE BU (uplink only)	OFF	OFF	OFF	OFF	OFF	OFF
Panel 12 (COMMUNICATIONS)											
MODULATE switch	PM or FM	PM	PM or FM	PM or FM	PM	PM	PM	PM or FM	PM or FM	PM or FM	PM or FM
XMTR/RCVR switch	PRIM	PRIM	PRIM	PRIM	PRIM	PRIM	PRIM	OFF	OFF	OFF	OFF
PWR AMPL switch	OFF	OFF	OFF	OFF	OFF	OFF	PRIM	OFF	OFF	OFF	OFF
VOICE FUNCTIONS switch	VOICE	OFF	OFF	VOICE	DN VOICE BU	OFF	OFF	OFF	OFF	OFF	OFF
PCM FUNCTIONS switch	OFF		PCM	OFF	OFF	KEY	OFF	OFF	OFF	OFF	OFF
RANGE FUNCTIONS switch	OFF	RANGE	OFF	OFF	OFF/ RESET	OFF/ RESET	TV/ CWEA EN-ABLE	OFF	OFF	OFF	OFF
VHF A XMTR switch	OFF	OFF	OFF	OFF	OFF	OFF	OFF	VOICE	OFF	OFF	VOICE (See note 5)
VHF A RCVR switch	OFF	OFF	OFF	OFF	OFF	OFF	OFF	ON	OFF	OFF	OFF
VHF B XMTR switch	OFF	OFF	OFF	OFF	OFF	OFF	OFF	OFF	VOICE	DATA	OFF
VHF B RCVR switch	OFF	OFF	OFF	OFF	OFF	OFF	OFF	OFF	ON	OFF	ON
BIOMED TELEMETRY switch	OFF	OFF	OFF	LEFT or RIGHT	OFF	OFF	OFF	OFF	OFF	OFF	OFF
PCM TELEMETRY switch	HI or LO	HI or LO	HI or LO	OFF	OFF	OFF	OFF	HI or LO	OFF	LO	HI or LO
RECORDER switch (See note 3.)	OFF	OFF	OFF	OFF	OFF	OFF	OFF				

Table 2.7-2. Communications Subsystem - General Switch and Circuit Breaker Configuration (cont)

Switches and Circuit Breakers	S-Band Voice	PRN Ranging	S-Band Telem-etry	Hard-line Biomed	S-Band Voice BU (Downlink)	Emer-gency Key	TV	VHF A Sim-plex	VHF B Sim-plex	VHF B Telem-etry	VHF A/B Duplex (LM/CSM)
Panel 12 (COMMUNICATIONS ANTENNAS)											
VHF selector switch								AFT or FWD	AFT or FWD	AFT or FWD	AFT or FWD
S-BAND selector switch	FWD or AFT	FWD or AFT	FWD or AFT	FWD or AFT	FWD or AFT	FWD or AFT	LUNAR STAY				
TRACK MODE switch	OFF	OFF	OFF	OFF	OFF	OFF	OFF	OFF	OFF	OFF	OFF
PITCH control											
YAW control											
Panel 12 (COMM)											
UPLINK SQUELCH switch	ENABLE	OFF	OFF	OFF	OFF	OFF	OFF	OFF	OFF	OFF	OFF
Circuit Breaker Panel 11											
AC BUS B: S-BD ANT	Open	Open	Open	Open	Open	Open	Open	Open	Open	Open	Open
COMM: UP DATA LINK					Closed (Uplink only)			Open	Open	Open	Open
COMM: SEC S-BD XMTR/ RCVR	Open	Open	Open	Open	Open	Open	Open	Open	Open	Open	Open
COMM: SEC S-BD PWR AMPL	Open	Open	Open	Open	Open	Open	Open	Open	Open	Open	Open
COMM: VHF A RCVR	Open	Open	Open	Open	Open	Open	Open	Open	Open	Open	Open
COMM: VHF B XMTR	Open	Open	Open	Open	Open	Open	Open	Open	Closed	Closed	Open
COMM: CDR AUDIO	Closed	Open	Open	Closed	Closed	Open	Open	Closed	Closed	Open	Closed

Table 2.7-2. Communications Subsystem - General Switch and Circuit Breaker Configuration (cont)

Switches and Circuit Breakers	S-Band Voice	PRN Ranging	S-Band Telem-etry	Hard-line Biomed	S-Band Voice BU (Downlink)	Emer-gency Key	TV	VHF A Sim-plex	VHF B Sim-plex	VHF B Telem-etry	VHF A/B Duplex (LM/CSM)
Circuit Breaker Panel 16											
COMM: SE AUDIO	Closed	Open	Open	Closed	Closed	Open	Open	Closed	Closed	Open	Closed
COMM: VHF A XMTR		Open	Open			Open	Open	Closed	Open	Open	Closed
COMM: VHF B RCVR		Open	Open			Open	Open	Open	Closed	Open	Closed
COMM: PRIM S-BD PWR AMPL	Open	Open	Open	Open	Open	Open	Closed	Open	Open	Open	
COMM: PRIM S-BD XMTR/ RCVR	Closed	Closed	Closed	Closed	Closed	Closed	Closed	Open	Open	Open	Open
COMM: S-BD ANT	Open	Open	Open	Open	Open	Open	Open	Open	Open	Open	Open
COMM: PMP	Closed	Open	Closed	Closed	Closed or Open	Open	Closed or Open	Closed	Closed	Open	Closed
COMM: TV	Open	Open	Open	Open	Open	Open	Closed	Open	Open	Open	Open
COMM: DISP	Closed	Closed	Closed	Closed	Closed	Closed	Closed	Closed	Closed	Closed	Closed
Push-to-Talk (PTT) Switches (See note 4.)											
Commander's attitude controller assembly PTT switch											
LM Pilot's attitude controller assembly PTT switch											
Commander's electrical umbilical PTT switch						PTT switch used as keyer					
LM Pilot's electrical umbilical PTT switch						PTT switch used as keyer					

Table 2.7-2: Communications Subsystem - General Switch and Circuit Breaker Configuration (cont)

NOTES:

1. The normal positions for switches on the AUDIO portion of panels 8 and 12 for relay modes, are as follows:

- CSM-LM VHF A simplex, relayed to MSFN via S-band

Panel 8:

RELAY ON switch - RELAY ON
VHF A switch - T/R
VHF B switch - OFF
S-BAND T/R switch - OFF or S-BAND RCV
MODE switch - VOX

Panel 12:

RELAY ON switch - RELAY OFF
VHF A switch - OFF or RCV
VHF B switch - OFF
S-BAND T/R switch - S-BAND T/R
MODE switch - VOX

- or -

Panel 8:

RELAY ON switch - RELAY OFF
VHF A switch - OFF or RCV
VHF B switch - OFF
S-BAND T/R switch - S-BAND T/R
MODE switch - VOX

Panel 12:

RELAY ON switch - RELAY ON
VHF A switch - T/R
VHF B switch - OFF
S-BAND T/R switch - OFF or S-BAND RCV
MODE switch - VOX

- or -

- LM, CSM, MSFN voice conference with LM relaying CSM voice to MSFN

NORMAL

Panel 8:

AUDIO CONT switch - NORM
RELAY ON switch - RELAY OFF
VHF A switch - T/R
VHF B switch - RCV
S-BAND T/R switch - S-BAND T/R
MODE switch - VOX

Table 2.7-2: Communications Subsystem - General Switch and Circuit Breaker Configuration (cont)

NOTES: (cont)

Panel 12:

AUDIO CONT switch - NORM
RELAY ON switch - RELAY ON
VHF A switch - OFF
VHF B switch - OFF
S-BAND switch - OFF
MODE switch - VOX

Panel 14:

COMM: UPLINK SQUELCH switch - OFF

BACKUP

Panel 8:

AUDIO CONT switch - BU
RELAY ON switch - RELAY ON
VHF A switch - OFF
VHF B switch - OFF
S-BAND T/R switch - OFF
MODE switch - VOX

Panel 12:

AUDIO CONT switch - NORM
RELAY ON switch - RELAY OFF
VHF A switch - T/R
VHF B switch - RCV
S-BAND T/R switch - S-BAND TR
MODE switch - VOX

Panel 14:

COMM: UPLINK SQUELCH switch - ENABLE

2. The Commander's and LM Pilot's MODE switches must be set to VOX when combined VHF and S-band equipments are used (relay operation). The ICS/PTT position provides hot-microphone capabilities on intercom.

3. The setting of the RECORDER switch does not affect any operational mode setting. The switch may be set to ON when audio transmission to MSFN cannot be accomplished. To preclude continuous recorder operation in hot mike mode, the RECORDER switch must be set to OFF.

4. PTT override exists for VOX mode. In the emergengy-keying mode, only one astronaut may key at a time.

5. For VHF ranging this switch is set to VOICE/RNG.

Table 2.7-3. S-Band Communications Capabilities

Information	Frequency or Rate	Subcarrier Modulation	Subcarrier Frequency	RF Carrier Modulation
UPLINK: 2101.8 mc				
Voice	300 to 3,000 cps	FM	30 kc	PM
Voice backup	300 to 3,000 cps	FM	70 kc	PM
PRN ranging code	990.6 kilobits/sec			PM
Digital data	1.0 kilobits/sec	FM	70 kc	PM
DOWNLINK: 2282.5 mc				
Voice	300 to 3,000 cps	FM	1.25 mc	PM or FM
Biomed	14.5 kc	FM	1.25 mc	PM or FM
EVCS	3.9-, 5.4-, 7.35- and 10.5-kc subcarriers	FM	1.25 mc	PM or FM
Voice backup	300 to 3,000 cps	None	None	Direct PM baseband modulation
Biomed backup	14.5 kc	None	None	Direct PM baseband modulation
EVCS backup	3.9-, 5.4-, 7.35- and 10.5-kc subcarriers	None	None	Direct PM baseband modulation
Voice backup	300 to 3,000 cps	None	None	Direct PM baseband modulation
PRN ranging code (turnaround)	990.6 kilobits/sec			PM
Emergency keying	Morse code	AM	512 kc	PM
PCM NRZ Data	High bit rate: 51.2 kilobits/sec Low bit rate: 1.6 kilobits/sec	Phase Shift Keying (PSK)	1.024 mc	PM or FM
TV	10 cps to 500 kc			FM baseband modulation

The prime purpose of the phase modulator (figure 2.7-6) during deep-space missions is to provide all in-flight and lunar-stay communications, except TV, with MSFN.

The phase modulator uses the output of the 19-mc VCO in the S-band receiver as the basis of its RF circuit. The VCO output is multiplied to approximately 76 mc in the receiver and routed to the phase modulator, where it is modulated by wide- or narrow-band information supplied from the SPA or by the PRN signal received from MSFN. The 76-mc carrier is then routed through a series of multipliers and drivers, where it is multiplied to the transmit carrier frequency (2282.5 mc).

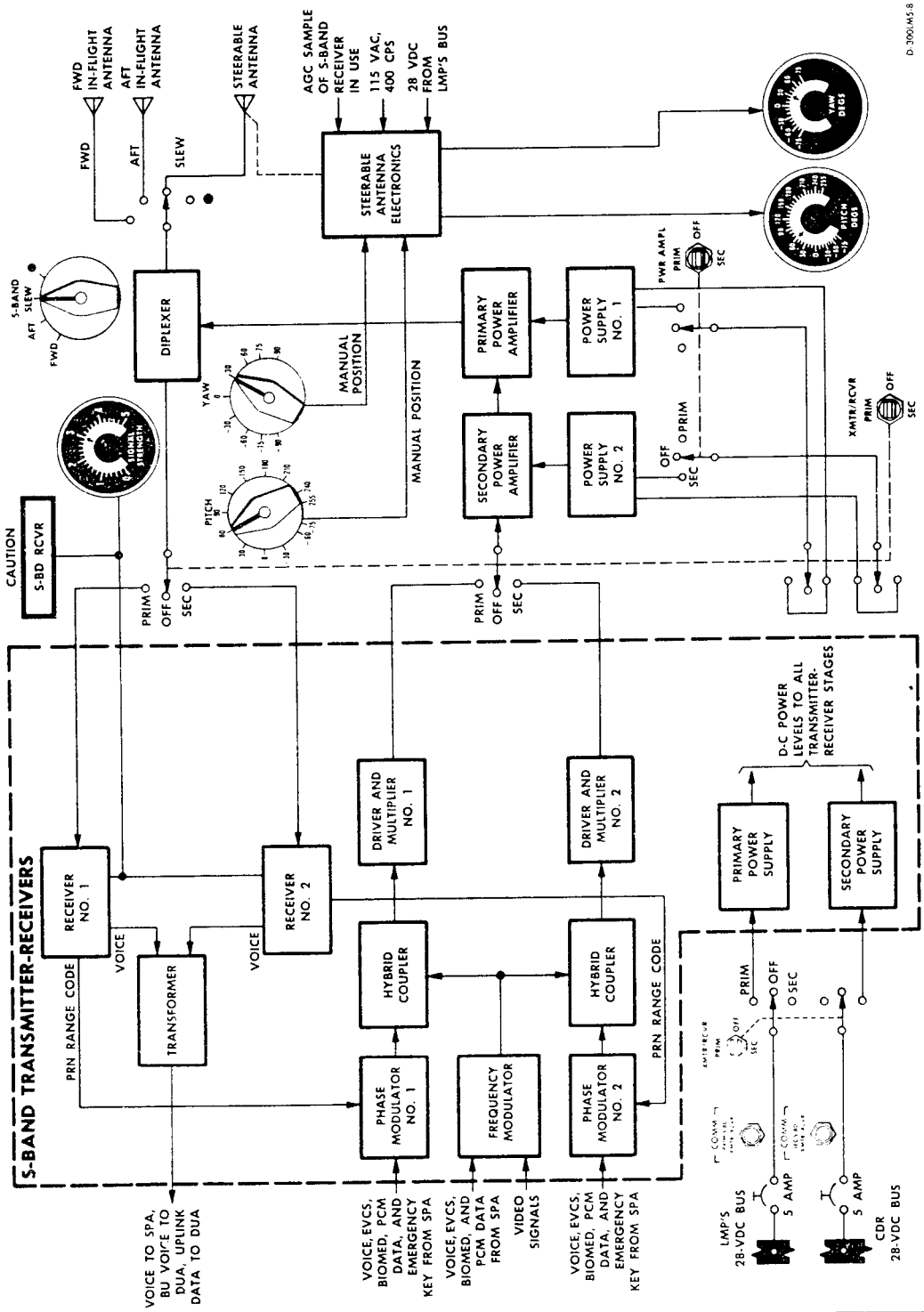

Figure 2.7-5. S-Band Equipment - Block Diagram

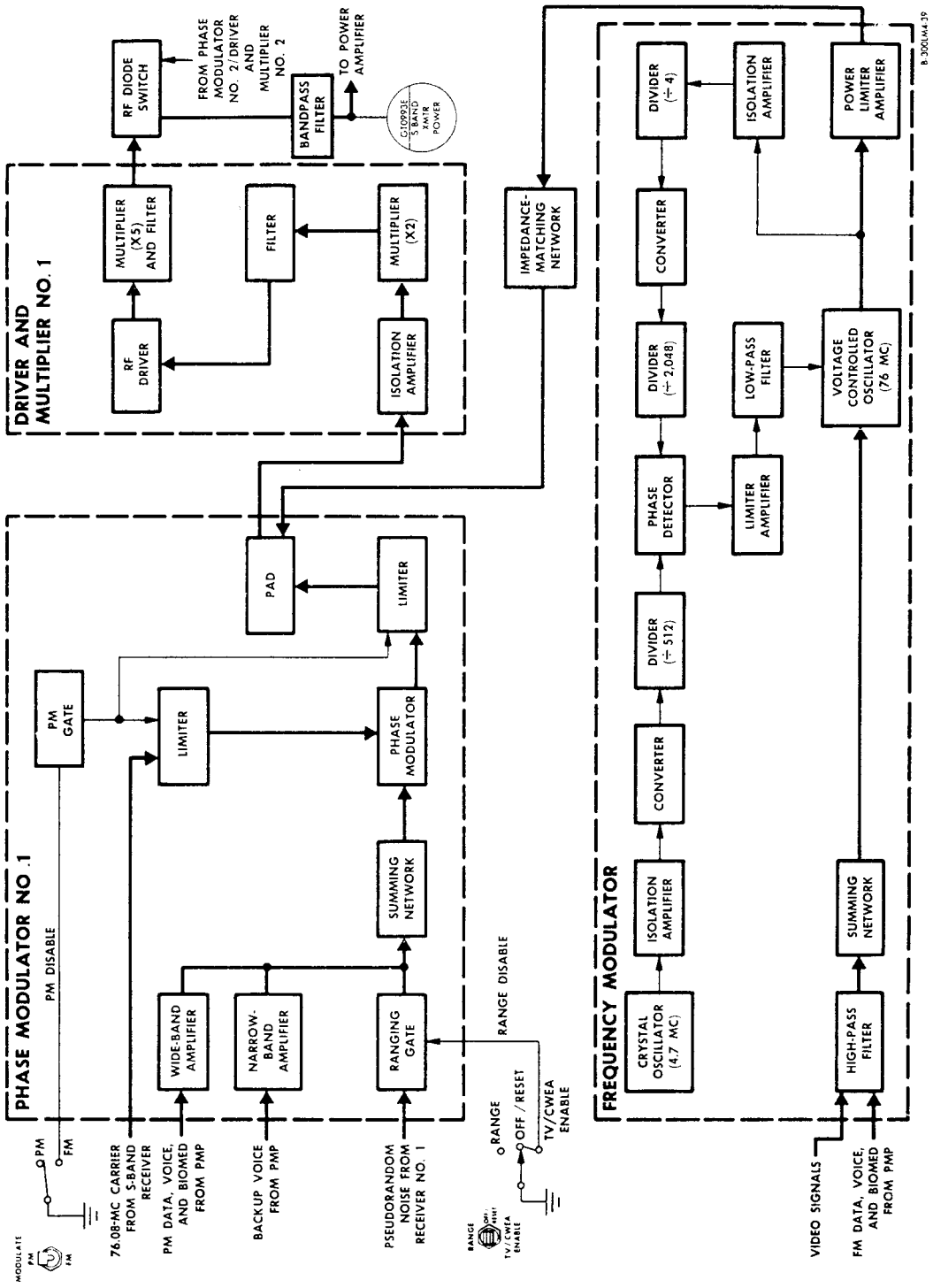

Figure 2.7-6. S-Band Transmitter - Block Diagram

The S-band receivers (figure 2.7-7) receive voice uplink data and coded PRN signals from MSFN. One receiver serves as backup for the normally used unit. The S-band receivers receive a 2101.8-mc carrier which is phase-modulated by the 30- and 70-kc subcarriers and the PRN ranging code. The output of the 19-mc VCO is routed through a chain of multiplier stages, where it is multiplied to 2054-3 mc, and heterodyned with the input carrier to obtain an output frequency of 47.5 mc from the first mixer. The first mixer output is mixed with 38 mc, provided by the VCO through a multiplier stage, yielding a second intermediate frequency of 9.5 mc. The second IF provides several narrow-band outputs, including automatic gain control (AGC) to the first IF, tracking AGC (used to position the steerable antenna), a signal-strength signal to the SIGNAL STRENGTH indicator (panel 12), and AGC-monitoring and static phase error signals that are supplied to the IS, where they are processed for telemetering. The wide-band signal outputs include the 30-kc voice subcarrier (routed to the PMP), the 70-kc data carrier (routed to the DUA) and the PRN ranging signal (routed to the S-band phase modulator).

Another function of the S-band receivers is to provide an output for use as the exciter frequency for the phase modulators. The 19-mc VCO output is routed through a chain of multiplier stages, where it is multiplied to 76 mc for use by the phase modulators as the base of the phase-coherent downlink carrier.

2.7.4.1.2 S-Band Power Amplifier. (See figure 2.7-8.)

The S-band power amplifier amplifies the S-band transmitter output when additional transmitted power is required. This assembly consists of two amplitrons, an input and an output isolator (ferrite circulators), and two power supplies, all mounted on a common chassis. The RF circuit is a series interconnection of the isolators and amplitrons. The amplitrons (which are characteristic of saturated, rather than linear, amplifiers) have broad bandwidth, high efficiency, high peak and average power output, but low gain. The isolators protect both amplitrons and both S-band transmitter driver and multiplier chains. The isolators exhibit a minimum isolation of 20 db and a maximum insertion loss of 0.6 db.

Each amplitron is supplied by its own power supply. One amplitron is designated primary; the other, secondary. Only one amplitron can be activated at a time. Selection is made with the PWR AMPL switch (panel 12). When neither amplitron is selected, a feedthrough path through the power amplifier is provided, with an insertion loss of 3.2 db, maximum (feedthrough mode).

When an amplitron is selected, 28 volts dc is supplied to its associated power supply. When 0.72 watt RF power is supplied to the power amplifier input from an S-band transmitter driver stage, the minimum output RF power is 18.6 watts through the primary stage or 14.8 watts through the secondary stage at the 2282.5-mc transmit frequency into a 50 ohm resistive load with a VSWR of 1.1 to 1 or better. The slightly degraded power output through the secondary stage is caused by the added attenuation of the primary stage in series with the secondary stage.

2.7.4.1.3 VHF Equipment. (See figure 2.7-9.)

The primary functions of the VHF equipment are to provide voice communications between the LM and the CSM, to provide CSM-LM-CSM ranging when used with the RTTA, and, during the blackout of transmission to MSFN, to provide lowbit telemetry transmission from the LM to the CSM. When the LM mission profile includes extra vehicular activity, this equipment also provides EVA-LM voice communications, and reception of EVA biomed and suit data for transmission to MSFN over the S-band.

The VHF transmitter-receiver assembly consists of two solid-state superheterodyne receivers, two transmitters, a VHF diplexer, RF antenna selector switch, two in-flight antennas, and an EVA antenna (for lunar missions). One transmitter-receiver combination provides a 296.8-mc channel (channel A); the other, a 259.7-mc channel (channel B), for simplex or duplex voice communications. Channel B may also be used to transmit PCM data from the IS at the low bit rate and to receive biomed and suit data from the EVA during EVA-programmed missions.

The VHF transmitters (figures 2.7-10 and 2.7-11) derive voice modulation and transmitter turn on/receiver disable control signals from the audio centers in the SPA that is initiated by the VOX circuit or by operation of the PTT switches. One audio center is connected to the Commander's microphone circuit and to the modulation inputs of the VHF transmitters; the other audio center is similarly

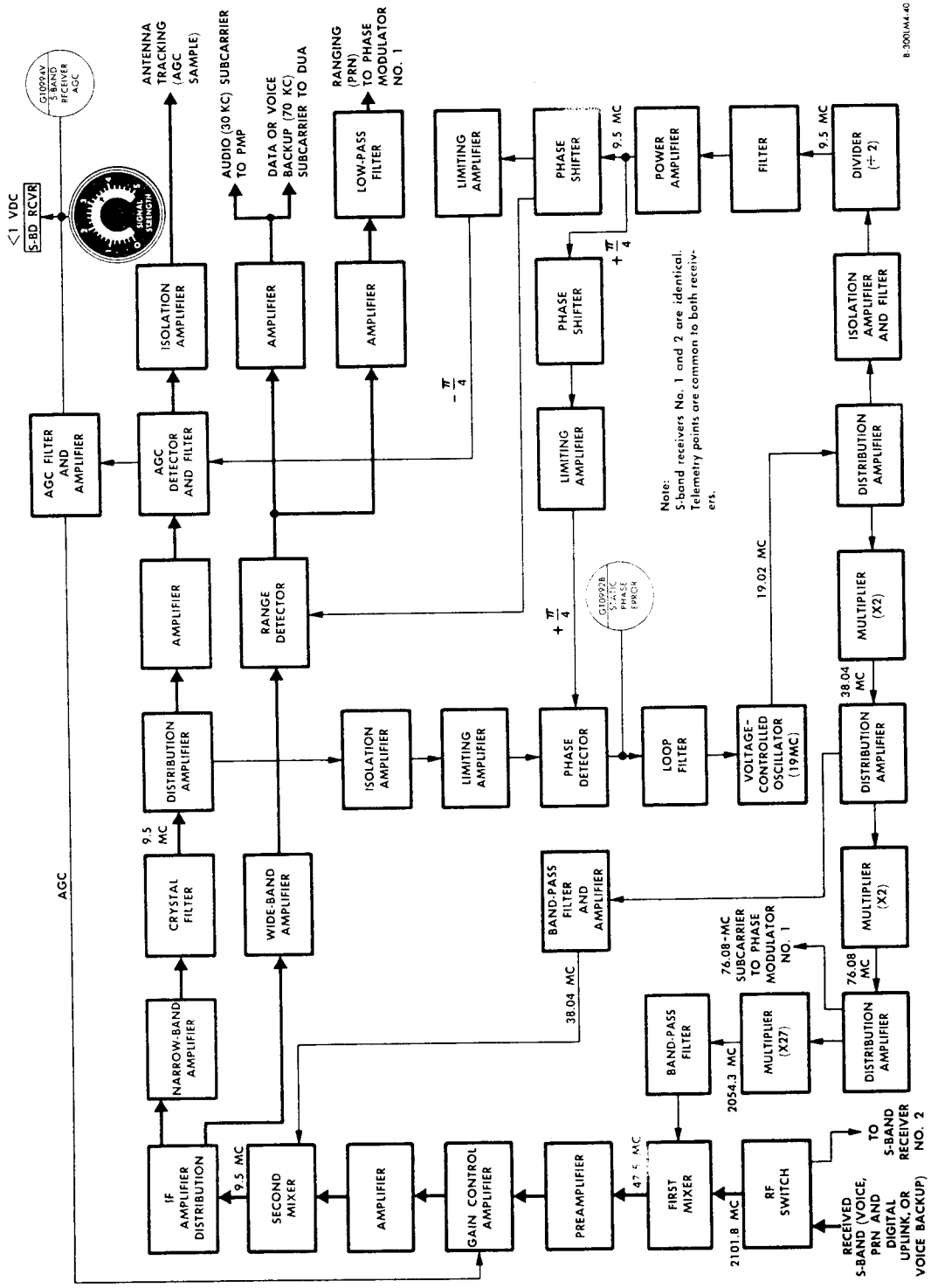

Figure 2.7-7. S-Band Receiver - Block Diagram

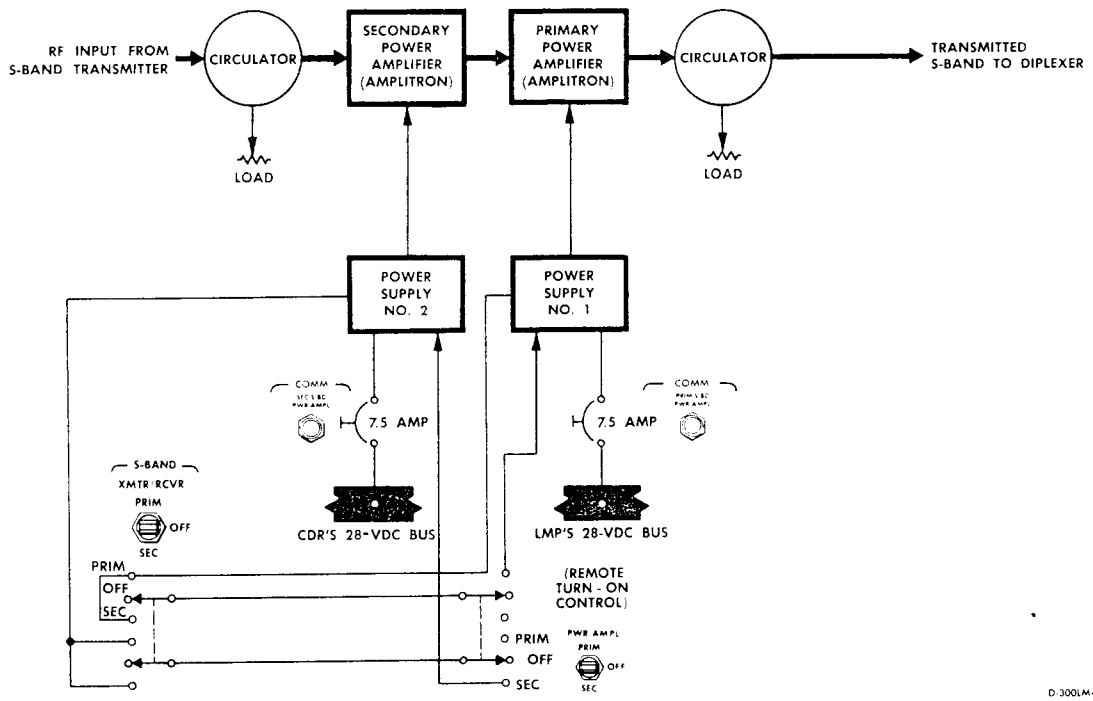

Figure 2.7-8. S-Band Power Amplifier - Block Diagram

connected for the LM Pilot. The input to the channel B transmitter can be switched from voice to PCM transmission by setting the VHF B XMTR switch (panel 12) to DATA. The PCM signals are generated in the PCMTEA. Transmitter outputs are routed to the VHF selector switch (panel 12) and to the antenna via a diplexer that permits simultaneous operation of VHF transmitters and receivers on a single antenna.

The transmitter uses on-off keyed, carrier amplitude modulation and delivers 5 watts RF power to the diplexer. Audio input is clipped and amplified by the chain of limiters and amplifiers in the modulator circuit. After clipping, the input signals appear as square-waves which key the power

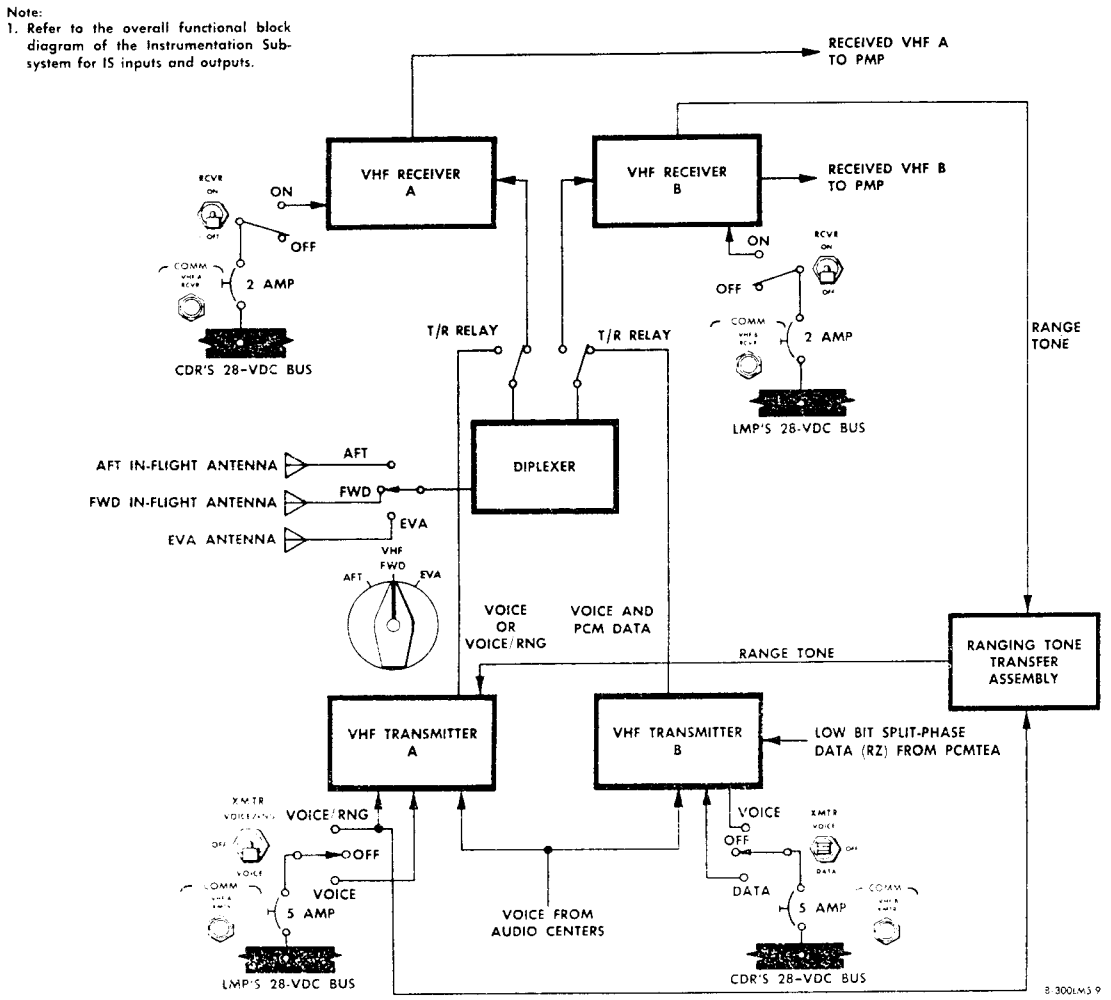

Figure 2.7-9. VHF Equipment - Block Diagram

amplifier on and off. The resultant transmitter output is a pulse-shaped RF signal. The 30-kc oscillator in the modulator continuously modulates the transmitter. This continuous modulation sustains the receiver AGC level causing it to remain quiet during speech-pause periods. A 98.93-mc crystal oscillator is used as the basis of the RF circuit in transmitter A; a 86.5[illegible]-mc crystal oscillator is used in transmitter B. The oscillator output frequency is tripled to the carrier frequency and is modulated by the output of the keyed amplifier.

Channel A provides the return signal to the CSM for CSM-LM VHF tracking and ranging. The transmitter receives its keying signal from the RTTA.

Channel B provides PCM data transmission. Data inputs are clipped and amplified in the modulator the same as audio signals. This transmitter has a voice-data mute circuit, which is controlled with the VHF B XMTR switch.

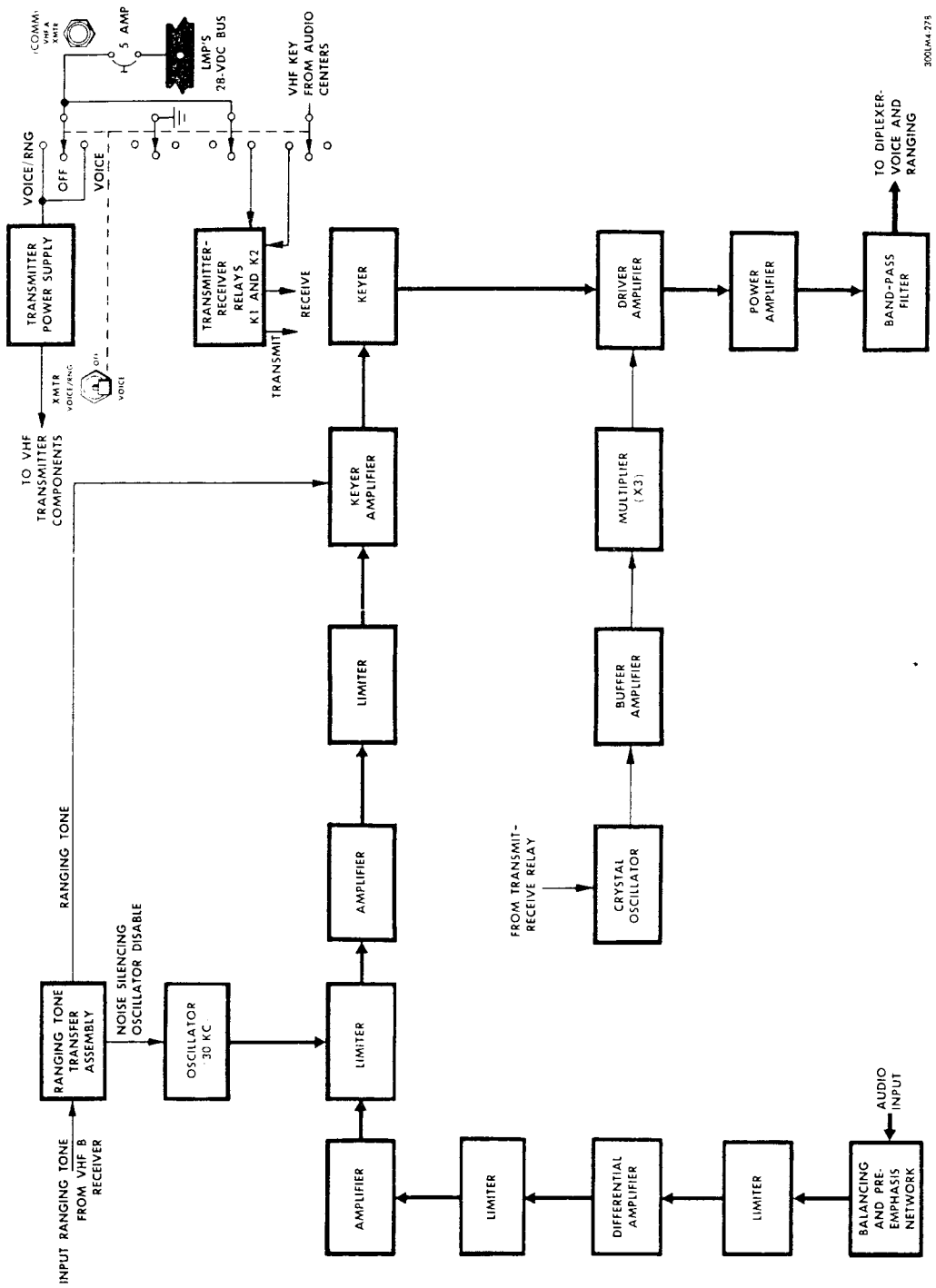

Figure 2.7-10. VHF Transmitter A - Block Diagram

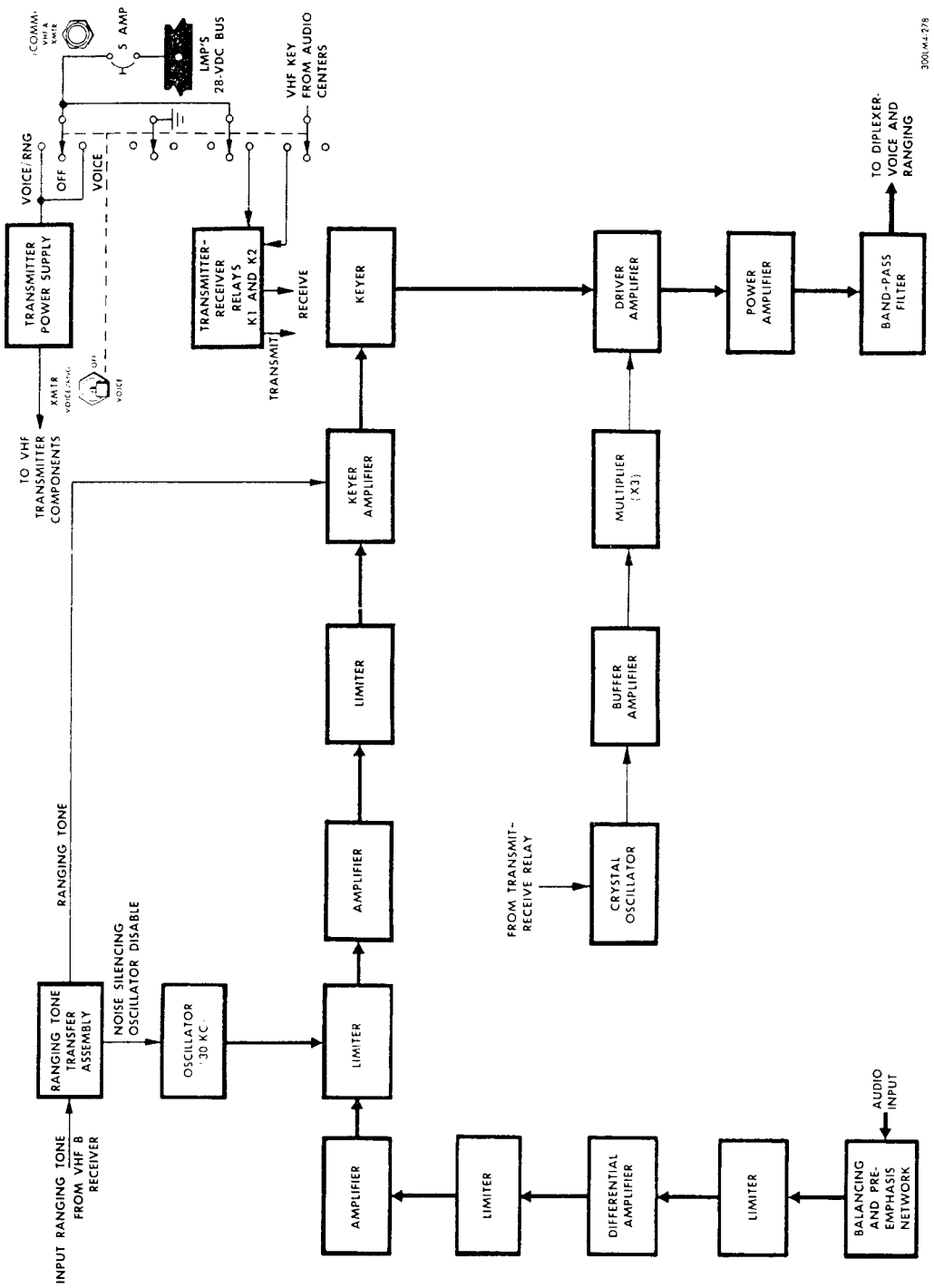

Figure 2.7-10. VHF Transmitter A - Block Diagram

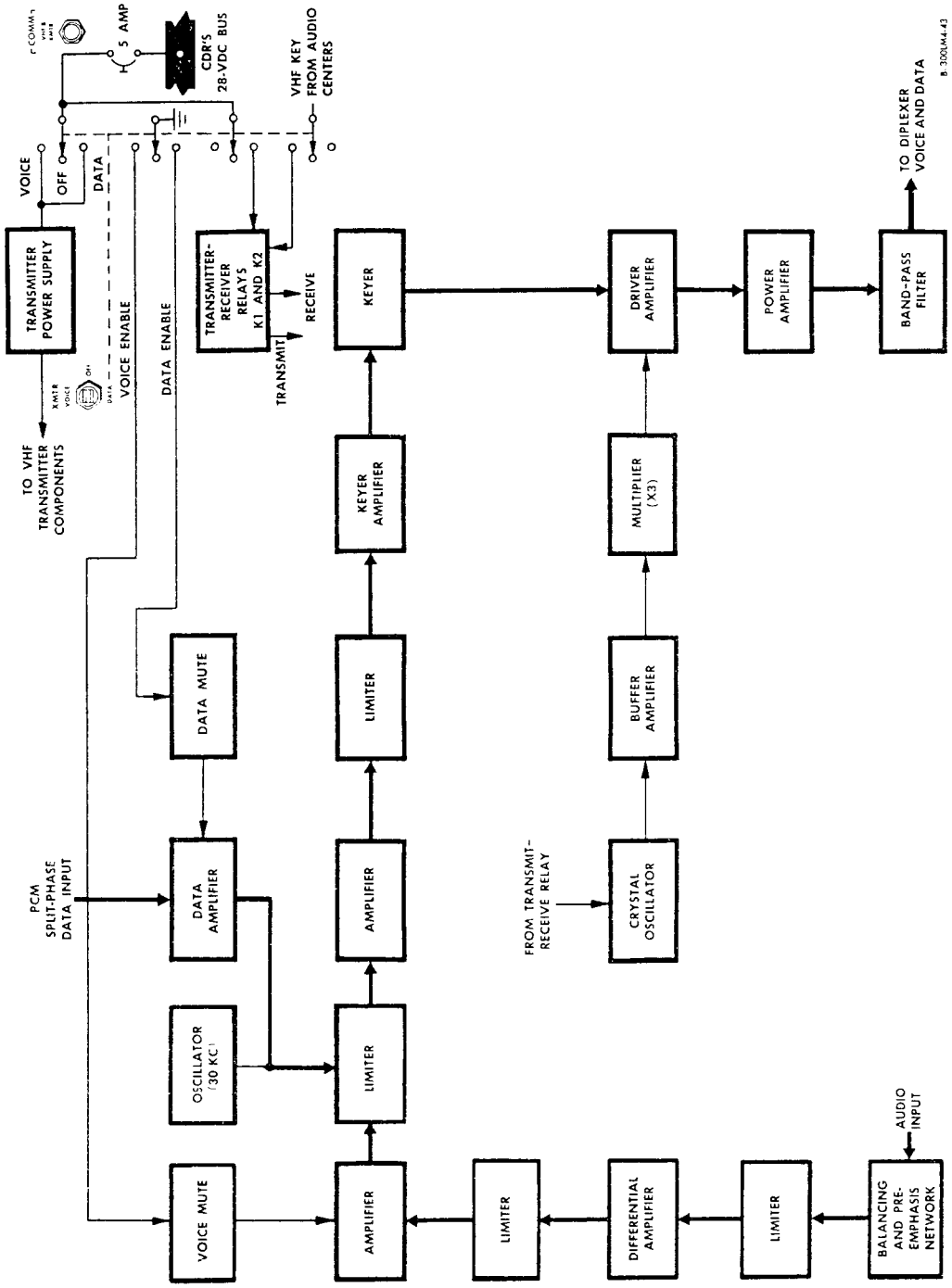

Figure 2.7-11. VHF Transmitter B - Block Diagram

The VHF receiver (figure 2.7-12) is an amplitude-modulation, fixed-tuned, single-conversion superheterodyne receiver that uses carrier-controlled squelch. There are two VHF receivers in the CS. The receivers can receive voice signals at 296.8 and 259.7 mc (channels A and B, respectively) and during EVA-programmed missions, biomed and suit data from the EVA via channel B. The frequency of a crystal-controlled-oscillator output is multiplied, and mixed with the received VHF signal in the mixer. The heterodyned output is a 30-mc IF signal, which is fed through a 30-mc crystal filter. The filter output is supplied to the AGC-controlled IF amplifiers, amplified, and routed to the PMP in the SPA. Squelch is carrier controlled, and adjusted by the SQUELCH thumbwheels (panel 12). The VHF B receiver is also used for CSM-LM ranging.

2.7.4.2 Signal-Processing Equipment.

The signal-processing equipment consists of the SPA, DUA and RTTA.

2.7.4.2.1 Signal-Processor Assembly. (See figure 2.7-13.)

The SPA is the common acquisition and distribution point for most CS received and transmitted data, except that low-bit-rate, split-phase data are coupled directly to VHF transmitter B, and TV signals are coupled directly to the S-band transmitter. The SPA processes voice and biomed signals and provides the interface between the RF electronics, DSEA, and PCMTEA. The SPA consists of an audio center for each astronaut and a PMP. The SPA does not handle ranging signals and 70-kc uplink digital data signals.

Premodulation Processor. (See figure 2.7-14.) The PMP provides signal modulation, mixing, and switching in accordance with the selected mode of operation. The PMP also permits the LM to be used as a relay station between the CSM and MSFN and, for EVA-programmed missions, between the EVA and MSFN.

The PMP accepts PCM NRZ data from the PCMTEA at 51.2 kilobits per second (high bit rate) or 1.6 kilobits per second (low bit rate). The data are routed to a biphase modulator, where the phase of a telemetry subcarrier frequency is controlled. Each logic-level change of the PCM data changes the biphase-modulator output by 180°. The biphase-modulator output is supplied to the PM or FM mixing network, depending on the selected mode, where it is combined with other signals processed in the PMP.

Two 512-kc clock signals are provided by the IS to the CS. A 1.024-mc telemetry subcarrier is generated from a 512-kc square wave (reference signal) from the pulse-code-modulation equipment of the PCMTEA. This 512-kc square wave is routed to a frequency doubler whose output is a 1.024-mc sine wave, phase-referenced to the PCM NRZ data. A 512-kc square wave (sync signal) received by the PMP, from the TE of the PCMTEA, is supplied to a tuned amplifier that supplies a 512-kc sine wave. This 512-kc signal is added to a 113-kc signal and the result is doubled to provide the 1.25-mc subcarrier. The biphase modulator accepts PCM NRZ data from the IS at the high or low bit rate. The input level of the data is 6±0.5 volts for logic 1; 0±0.5 volts for logic 0. The data modulates the 1.024-mc subcarrier. The modulated subcarrier is routed through a 1.024-mc band-pass filter to the FM or PM mixing network.

Emergency keying is provided in the PMP by gating the 512-kc sync signal generated from the 512-kc square-wave sync input from the TE directly on the input line of the S-band phase modulator. The PTT switch on each electrical umbilical serves as the manually operated keyer to gate the output of the key gate circuit on and off.

Voice for S-band transmission is accepted by the PMP via a low-pass filter, which passes 300- to 3,000-cps signals. These voice signals are passed within ±1 db referenced to 1,000 cps; signals above 4,000 cps are attenuated at least 20 db. The low-pass filter output modulates the 1.25-mc subcarrier or is routed directly to the S-band phase modulator for direct baseband modulation. The modulated 1.25-mc subcarrier is routed through tuned, isolation, and AGC amplifiers and supplied to the PM mixer or FM mixer.

Backup voice transmission is accommodated via S-band by routing the low-pass-filter output directly to a speech-processing network. This network provides 24 db of speech clipping referenced to

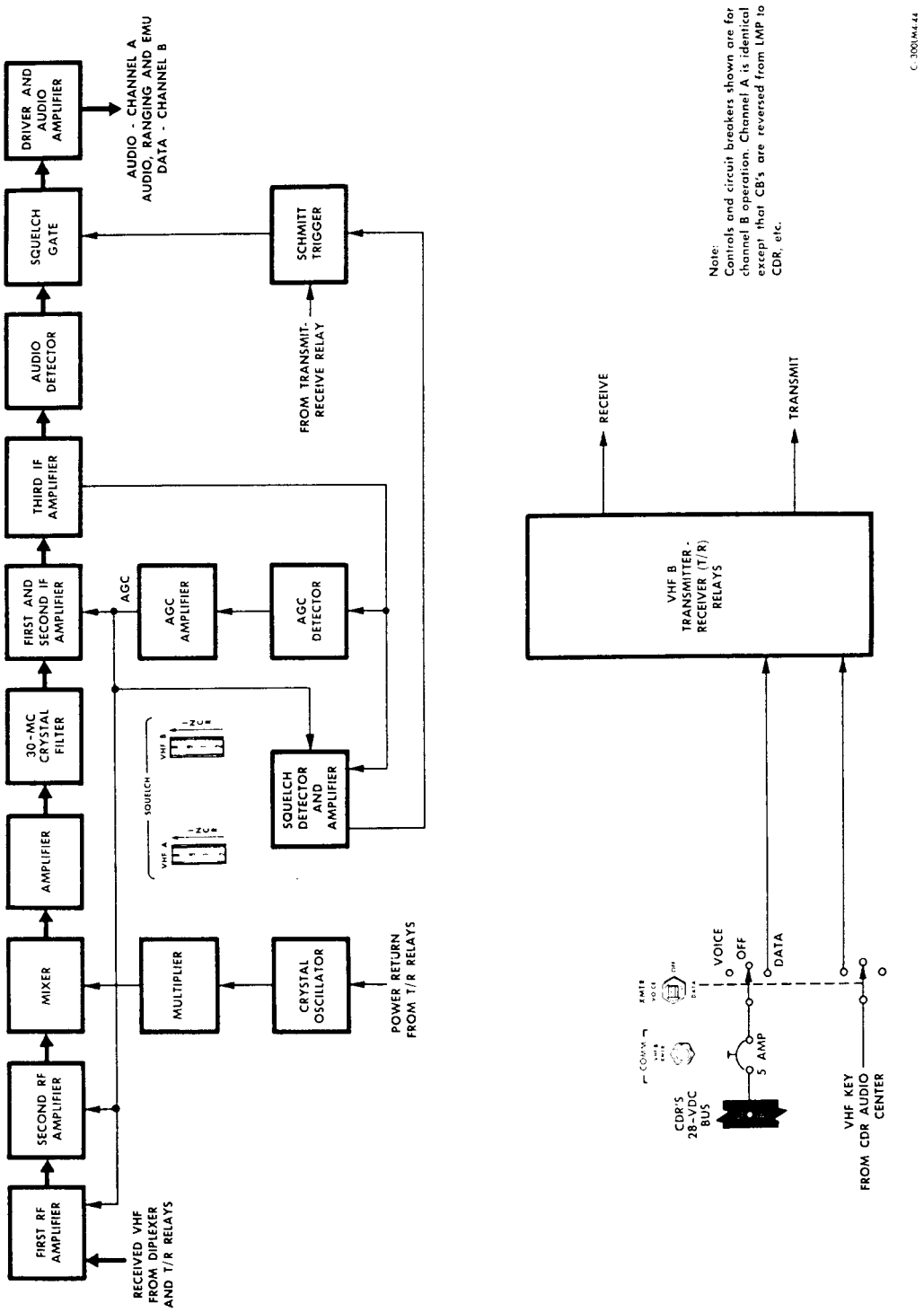

Figure 2.7-12. VHF Receiver - Block Diagram

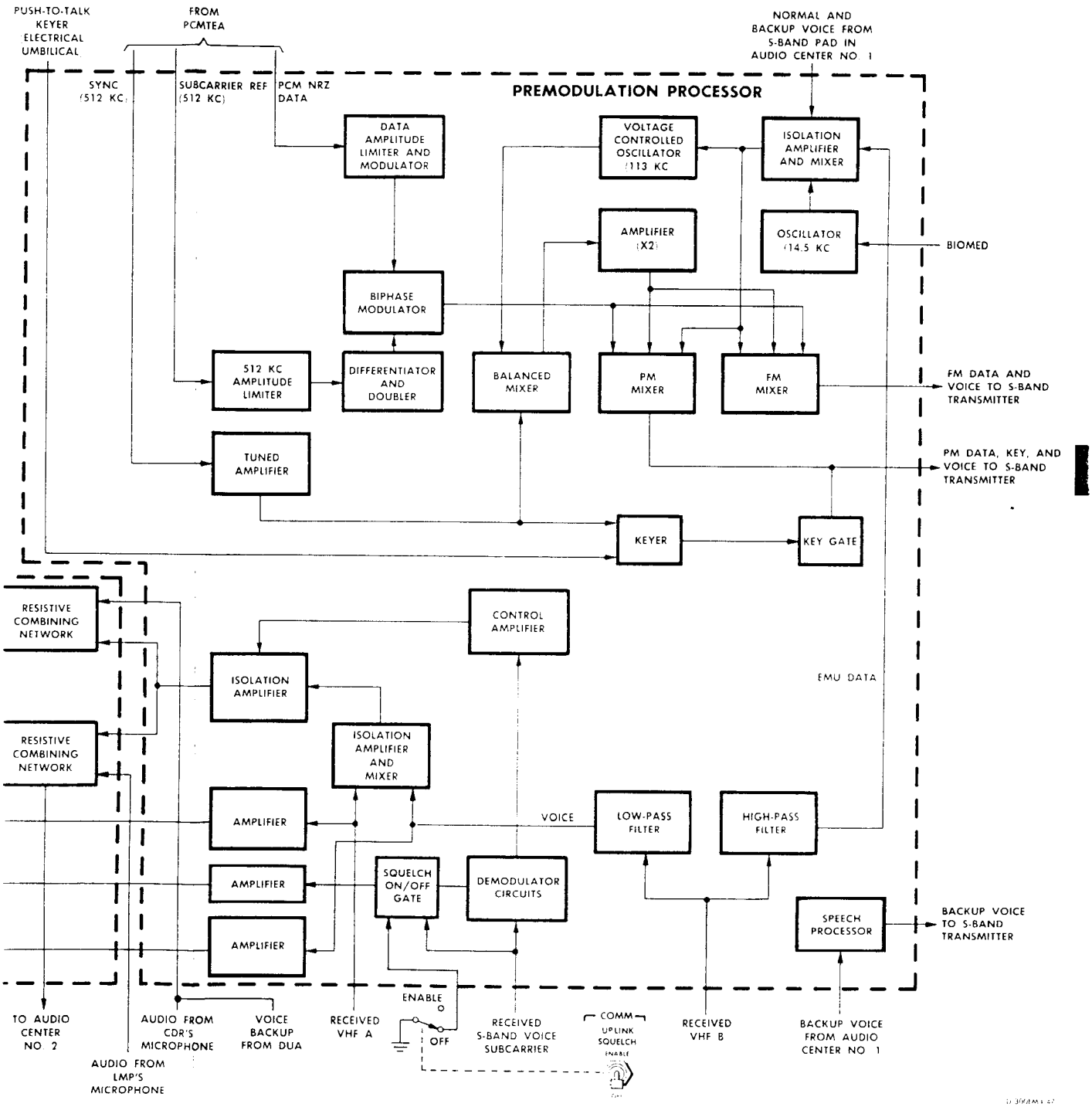

Figure 2.7-13. Signal Processor Assembly - Block Diagram

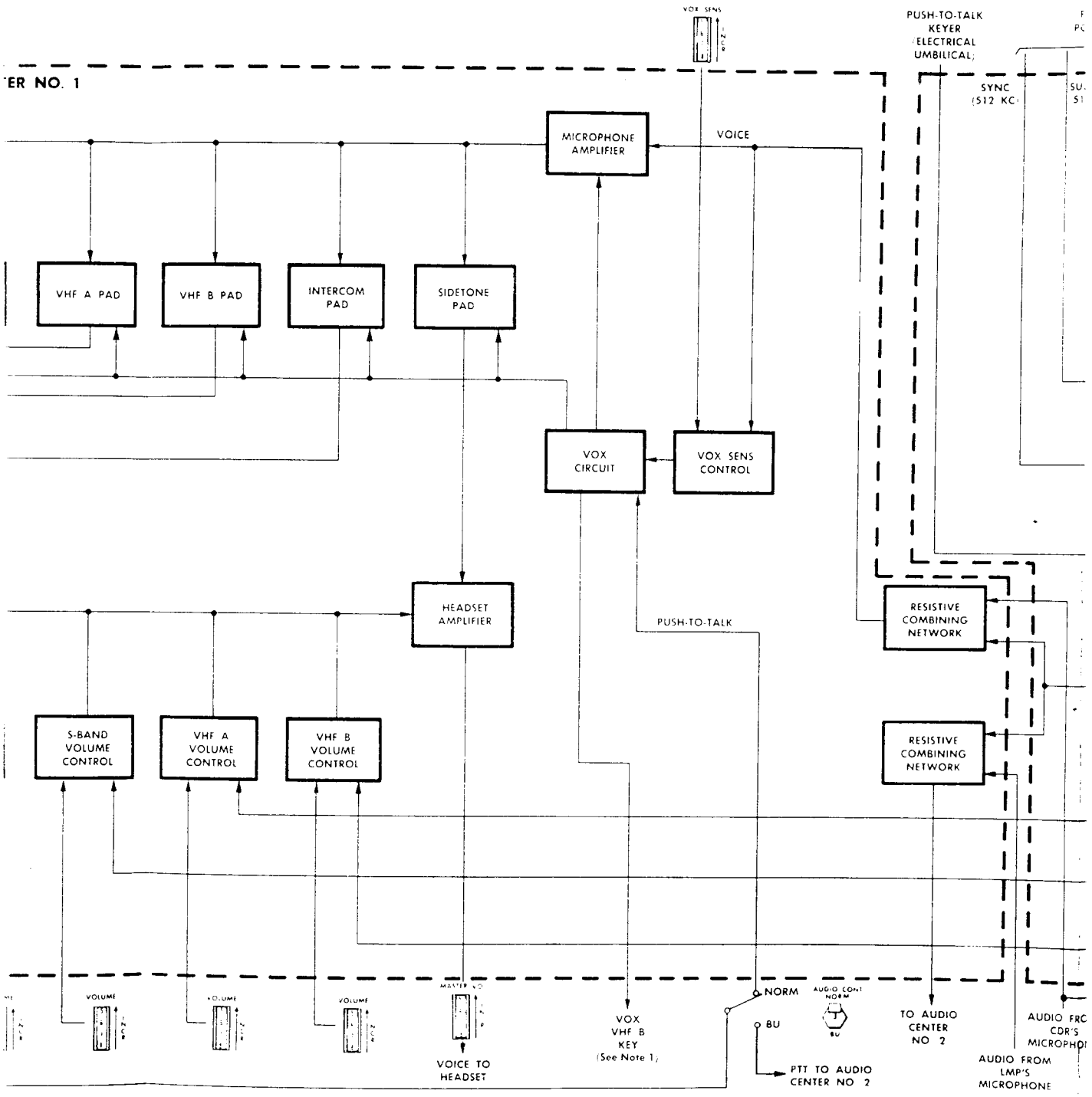
ER NO. 1
VOX SENS
PUSH-TO-TALK
KEYER
(ELECTRICAL
UMBILICAL)
SYNC
(512 KC)
MICROPHONE
AMPLIFIER
VOICE
VHF A PAD
VHF B PAD
INTERCOM
PAD
SIDETONE
PAD
VOX
CIRCUIT
VOX SENS
CONTROL
HEADSET
AMPLIFIER
PUSH-TO-TALK
RESISTIVE
COMBINING
NETWORK
S-BAND
VOLUME
CONTROL
VHF A
VOLUME
CONTROL
VHF B
VOLUME
CONTROL
RESISTIVE
COMBINING
NETWORK
VOLUME
VOLUME
VOLUME
MASTER VOL
VOICE TO
HEADSET
VOX
VHF B
KEY
(See Note 1)
NORM
BU
AUDIO CONT
NORM
BU
PTT TO AUDIO
CENTER NO 2
TO AUDIO
CENTER
NO 2
AUDIO FROM
LMP'S
MICROPHONE

Missi

Note:
1. Audio center No. 2 (LMP) provides the key supply for VHF A and DSEA.
2. Refer to the overall functional block diagram of the Instrumentation Subsystem for IS inputs and outputs.

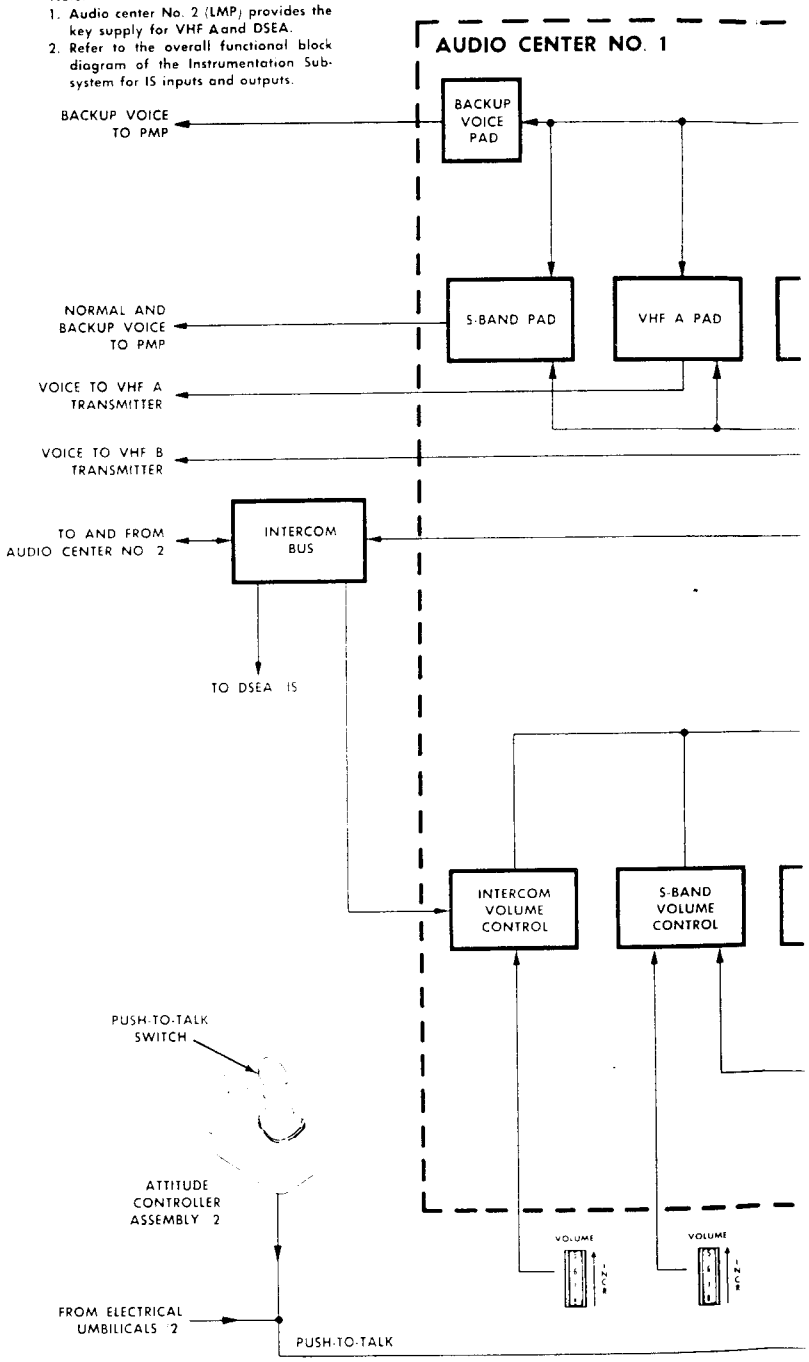

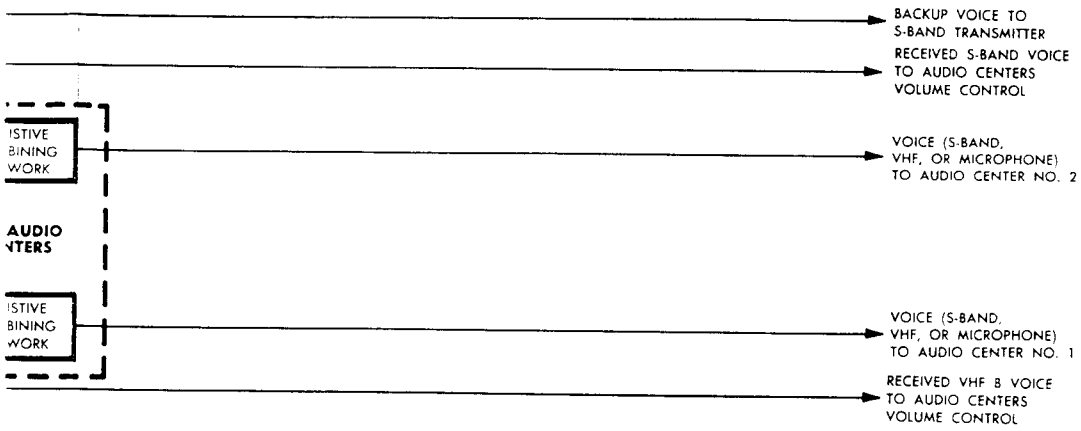
BACKUP VOICE TO S-BAND TRANSMITTER
RECEIVED S-BAND VOICE TO AUDIO CENTERS VOLUME CONTROL
ISTIVE BINING WORK
VOICE (S-BAND, VHF, OR MICROPHONE) TO AUDIO CENTER NO. 2
AUDIO NTERS
ISTIVE BINING WORK
VOICE (S-BAND, VHF, OR MICROPHONE) TO AUDIO CENTER NO. 1
RECEIVED VHF B VOICE TO AUDIO CENTERS VOLUME CONTROL

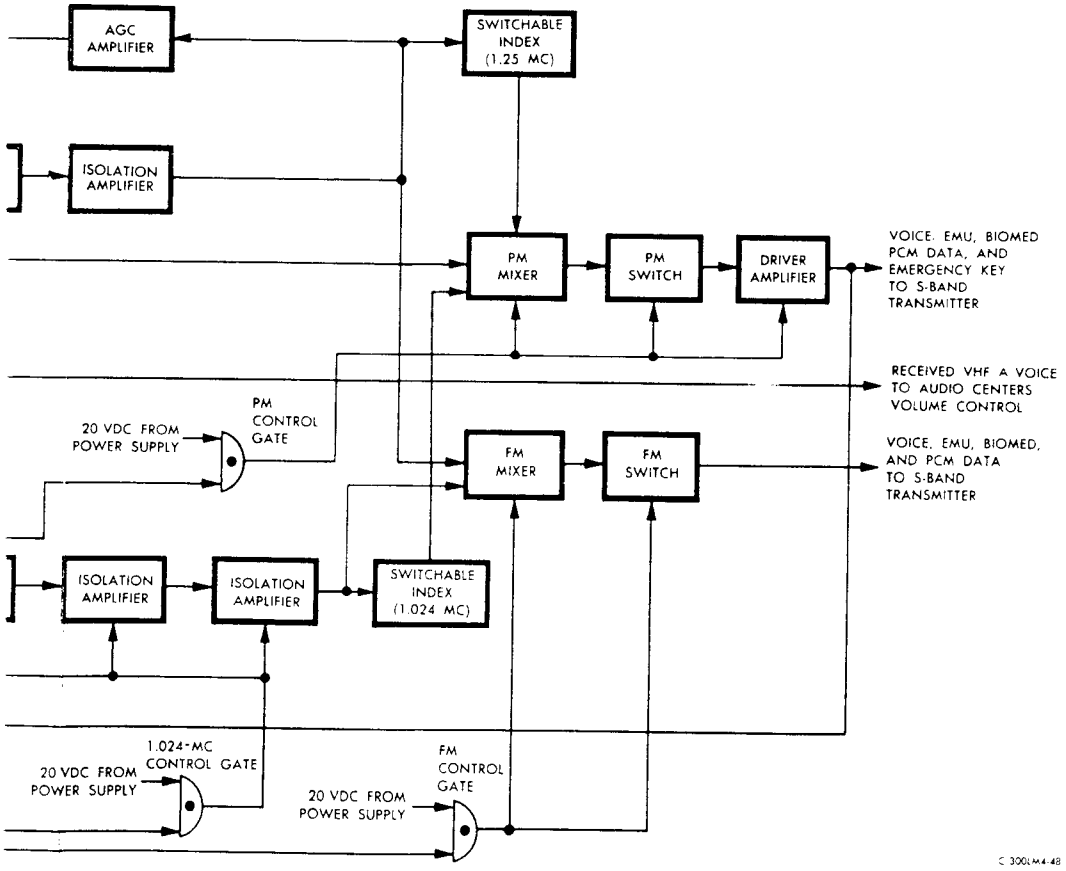
AGC AMPLIFIER
SWITCHABLE INDEX (1.25 MC)
ISOLATION AMPLIFIER
PM MIXER
PM SWITCH
DRIVER AMPLIFIER
VOICE, EMU, BIOMED PCM DATA, AND EMERGENCY KEY TO S-BAND TRANSMITTER
RECEIVED VHF A VOICE TO AUDIO CENTERS VOLUME CONTROL
PM CONTROL GATE
20 VDC FROM POWER SUPPLY
FM MIXER
FM SWITCH
VOICE, EMU, BIOMED, AND PCM DATA TO S-BAND TRANSMITTER
ISOLATION AMPLIFIER
ISOLATION AMPLIFIER
SWITCHABLE INDEX (1.024 MC)
1.024-MC CONTROL GATE
20 VDC FROM POWER SUPPLY
FM CONTROL GATE
20 VDC FROM POWER SUPPLY
C 3001M4-48

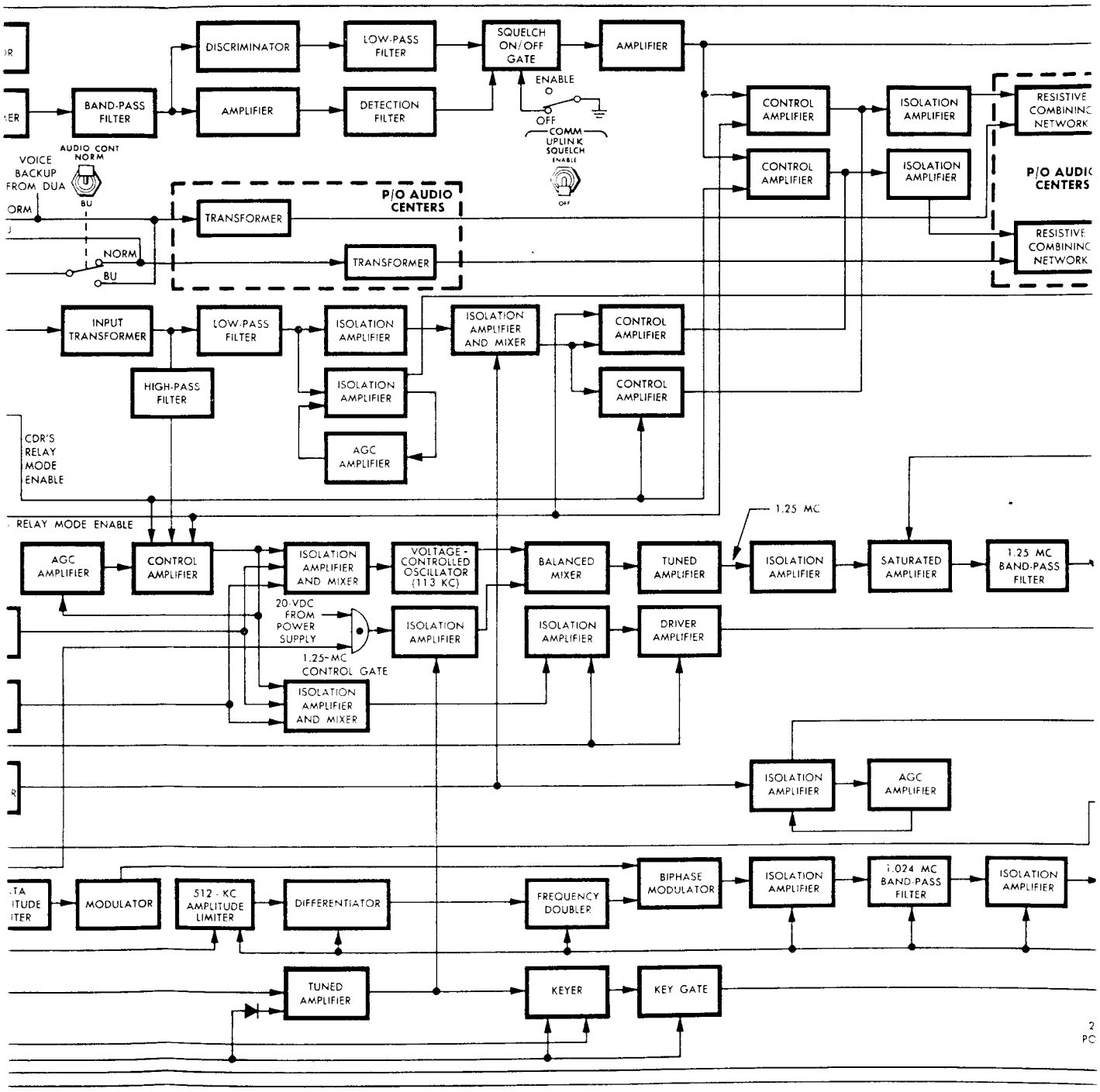
DISCRIMINATOR
LOW-PASS FILTER
SQUELCH ON/OFF GATE
AMPLIFIER
BAND-PASS FILTER
AMPLIFIER
DETECTION FILTER
ENABLE
OFF
COMM UPLINK SQUELCH ENABLE
CONTROL AMPLIFIER
ISOLATION AMPLIFIER
RESISTIVE COMBINING NETWORK
CONTROL AMPLIFIER
ISOLATION AMPLIFIER
P/O AUDIO CENTERS
AUDIO CONT NORM
VOICE BACKUP FROM DUA
BU
TRANSFORMER
P/O AUDIO CENTERS
NORM
BU
TRANSFORMER
RESISTIVE COMBINING NETWORK
INPUT TRANSFORMER
LOW-PASS FILTER
ISOLATION AMPLIFIER
ISOLATION AMPLIFIER AND MIXER
CONTROL AMPLIFIER
HIGH-PASS FILTER
ISOLATION AMPLIFIER
CONTROL AMPLIFIER
AGC AMPLIFIER
CDR'S RELAY MODE ENABLE
RELAY MODE ENABLE
1.25 MC
AGC AMPLIFIER
CONTROL AMPLIFIER
ISOLATION AMPLIFIER AND MIXER
VOLTAGE-CONTROLLED OSCILLATOR (113 KC)
BALANCED MIXER
TUNED AMPLIFIER
ISOLATION AMPLIFIER
SATURATED AMPLIFIER
1.25 MC BAND-PASS FILTER
20-VDC FROM POWER SUPPLY
ISOLATION AMPLIFIER
ISOLATION AMPLIFIER
DRIVER AMPLIFIER
1.25-MC CONTROL GATE
ISOLATION AMPLIFIER AND MIXER
ISOLATION AMPLIFIER
AGC AMPLIFIER
MODULATOR
512-KC AMPLITUDE LIMITER
DIFFERENTIATOR
FREQUENCY DOUBLER
BIPHASE MODULATOR
ISOLATION AMPLIFIER
1.024 MC BAND-PASS FILTER
ISOLATION AMPLIFIER
TUNED AMPLIFIER
KEYER
KEY GATE

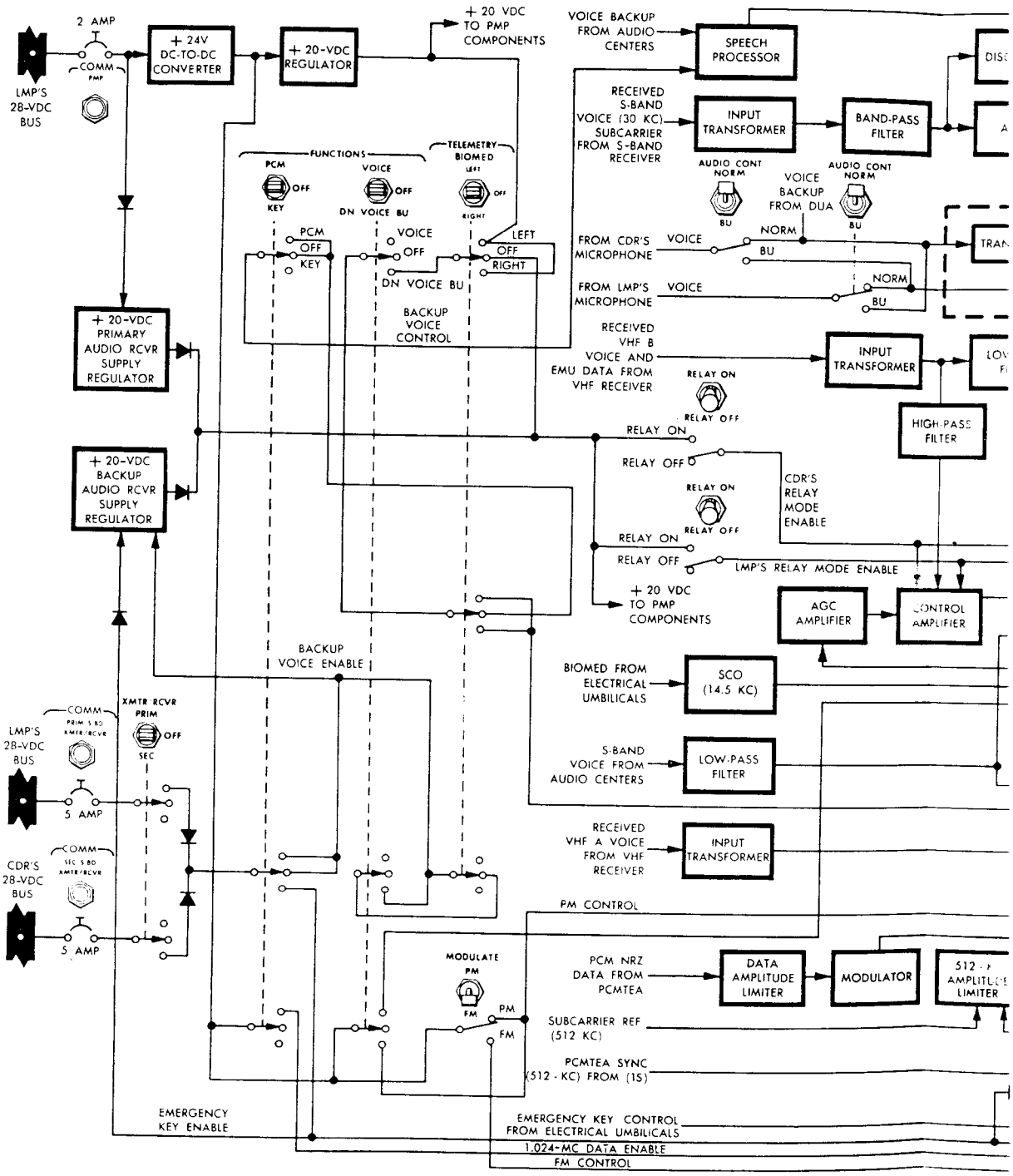

Figure 2.7-14. Premodulation Processor - Block Diagram

3,000 cps, and voice preamphasis of 6 db per octave between 300 and 3,000 cps. The speech-processing network output is supplied directly to the narrow-band PM input of the S-band equipment. This mode is attained by setting the BIOMED TELEMETRY switch (panel 12) to OFF and setting the VOICE FUNCTIONS switch to DN VOICE BU.

The PMP accepts hardline EKG data from each astronaut and, by external control, selects one of these data for S-band transmission. The input is a 0- to 5-volt signal, at 0 to 30 cps. It frequency-modulates a 14.5-kc subcarrier oscillator, with a maximum deviation of 1 kc. The oscillator input is mixed with voice. The composite signal modulates the 1.25-mc subcarrier in the same manner as voice for S-band transmission, or is routed directly to the PM or FM mixer for direct baseband modulation.

Received S-band voice signals are routed through the PMP to the microphone and headset volume control circuits in the audio centers. A squelch control gate in the received S-band audio circuits establishes the threshold level of the incoming audio at a preset level. During normal voice communications the squelch control gate is turned on by setting the COMM: UPLINK SQUELCH switch (panel 14) to ENABLE. This allows incoming audio signals with an amplitude in excess of 0.7 volts peak-to-peak to be amplified and monitored by the astronauts. Setting the COMM: UPLINK SQUELCH switch to OFF disables the squelch circuit. The PMP has a discriminator to demodulate the S-band subcarrier. The discriminator output, which has a bandwidth of 300 to 3,000 cps ±3 db referenced to 1,000 cps, is routed to the audio centers via a low-pass filter and mixer network and relay amplifiers. The VHF channel B input has high- and low-pass filters to separate voice and extravehicular mobility unit (EMU) data.

The PM mixing network can process the outputs of the 1.25- and 1.024-mc channels (a composite of voice, biomed data, telemetry data, and EMU data). These outputs are then supplied to the selected S-band phase modulator for transmission to MSFN. The FM mixing network can process the outputs of the 1.024-mc data channel and a composite of voice, biomed data, PCM data, and EMU data, all on the 1.25-mc subcarrier. These outputs are then supplied to the S-band frequency modulator for transmission to MSFN. FM video, PM ranging, backup voice, and emergency key signals are not processed through the mixing networks; they are supplied directly to the selected modulator for baseband modulation.

CS

Audio Centers. (See figure 2.7-15.) Two identical audio centers (one for each astronaut) in the SPA provide individual selection, isolation, and amplification of audio signals received by the CS receivers and which are to be transmitted by the CS transmitters. The audio centers are controlled from the AUDIO portion of panels 8 and 12. Each audio center contains a microphone amplifier, headset amplifier, VOX circuit, diode switches, volume control circuits, and isolation pads. The VOX circuit controls the microphone amplifier by activating it only when required for voice transmission.

Audio signals are routed to and from the VHF A, VHF B, and S-band equipments and the intercom bus via the audio centers. The intercom bus, common to both audio centers, provides hardline communications between the astronauts. Voice signals to be recorded by the DSEA are taken from the intercom bus.

Inputs and outputs are controlled by the VHF A, VHF B, S-BAND T/R, and ICS T/R (intercom) switches on panels 8 and 12. An associated thumbwheel (volume control) for each switch provides continuous adjustment of the received audio signal. Panels 8 and 12 also have VOX SENS and MASTER VOL thumbwheels. The VOX SENS thumbwheel permits continuous adjustment of the VOX control circuit threshold; the MASTER VOL thumbwheel, continuous adjustment of all audio outputs from the headset amplifier. Received audio signals are isolated and routed through the volume control circuits, which provide a 30-db control range at the output of the headset amplifier. The four inputs (S-band, VHF A, VHF B, and intercom) routed through the headset circuit have minimum isolation of 40 db between any two inputs.

If one audio center fails, the astronaut affected by the malfunction can switch to the other audio center, using the AUDIO CONT switch (panels 8 and 12). (See figure 2.7-16.) With the switch set to NORM, the astronaut is using his own audio center; the BU position switches him to the other audio center.

2.7.4.2.2 Digital Uplink Assembly. (See figure 2.7-17.)

The DUA decodes S-band 70-kc digital uplink commands from MSFN and routes the data to the LGC. The LGC processes the data and routes a verification signal to the PCMTEA for transmission to MSFN to indicate that the uplink commands have been processed by the LGC. The DUA also routes a

verification signal to the PCMTEA for transmission to MSFN, to indicate that the uplink commands are properly decoded and have been routed to selected LM equipment. The digital uplink commands addressed to the LGC parallel those inputs available to the LGC via the display and keyboard (DSKY). The DUA also provides a voice backup capability if the received S-band audio circuits in the PMP fail.

The DUA consists of a 70-kc discriminator, two audio amplifiers, a phase-shift-keyed (PSK) demodulator, two redundant decoders, and a power supply. The power supply converts the Commander's 28-volt d-c bus voltage to the regulated voltages required by the DUA. The power supply contains a dc-to-dc converter with regulators that provide 4.5 and 24 volts dc. The DUA provides two modes of operation for uplink communications: data or voice backup. Either mode is selected by the UP DATA LINK switch (panel 12).

Data Mode. Processing of digital uplink commands is initiated by closing the COMM: UP DATA LINK circuit breaker (panel 11) and setting the UP DATA LINK switch to DATA. The 70-kc discriminator then receives the 70-kc subcarrier digital uplink commands from the S-band receiver. Each uplink command is composed of a 22-bit, serially coded message comprising three vehicle address bits, three system address bits (message identification), and 16 information bits.

The discriminator consists of two amplifier stages tuned to approximately 62 to 78 kc. These frequencies are the extremes of the FM deviation of the 70-kc digital uplink subcarrier. The demodulated output of the discriminator is a two-tone composite modulating signal consisting of a 2-kc subcarrier tone and a 1-kc coherent synchronization tone. The demodulated output is amplified by the data audio amplifier and applied to the PSK demodulator.

The PSK demodulator converts the signals from the 70-kc discriminator into a series of digital 1's and 0's for application to the two redundant decoders. The 2-kc subcarrier (which contains the uplink data) is phase-shift-keyed at a 1-kc binary rate. A subcarrier phase shift of 180° denotes a change in logic level. The synchronization tone is the same frequency as the binary bit command rate; zero crossings are coincident within ±6 microseconds. The demodulator separates the two-tone composite signal. It detects the phase of the 2-kc subcarrier and provides data pulses, corresponding to 1 and 0 data bits, to the decoders. The two tones are used to time sequential clock pulses, which are used to strobe information into the decoders.

The decoders process the uplink data and at the direction of the uplink data, route information via an interface unit to the LGC. The decoders also generate an eight-bit verification word and route it via an interface unit to the PCMTEA, for telemetry, when command or data words are processed in the DUA and routed to the LGC. If the three vehicle address bits (of the 22-bit message) are not 011 or the system address bits are not recognizable, the DUA neither processes the uplink data nor generates the verification word.

Voice Backup Mode. The voice backup capability of the DUA is used if the PMP circuits that process the received S-band 30-kc audio subcarrier malfunction. If such failure occurs, MSFN can transmit audio on the 70-kc uplink subcarrier. The DUA operates in the voice backup mode when the UP DATA LINK switch is set to VOICE BU. This supplies power to the voice backup circuits, enabling the 70-kc discriminator to demodulate the audio on the 70-kc subcarrier and to route the audio to the Commander's audio center microphone input. When the DUA is in the data mode, an audio inhibit circuit supplies an inhibit signal to the voice amplifier. This prevents extraneous noise that may appear on the uplink subcarrier from entering the audio centers.

2.7.4.2.3 Ranging Tone Transfer Assembly. (See figure 2.7-18.)

The RTTA operates with VHF receiver B and VHF transmitter A to provide a transponder function for CSM-LM VHF ranging. The RTTA receives VHF ranging tone inputs from VHF receiver B and routes these signals, properly processed, to VHF transmitter A.

The VHF ranging tone inputs consist of two acquisition tone signals and one track signal. No accurate ranging is accomplished until the track signal is received and retransmitted. The first acquisition signal is the 3.95-kc medium tone transmitted for 4 seconds from the CSM. If the LM responds

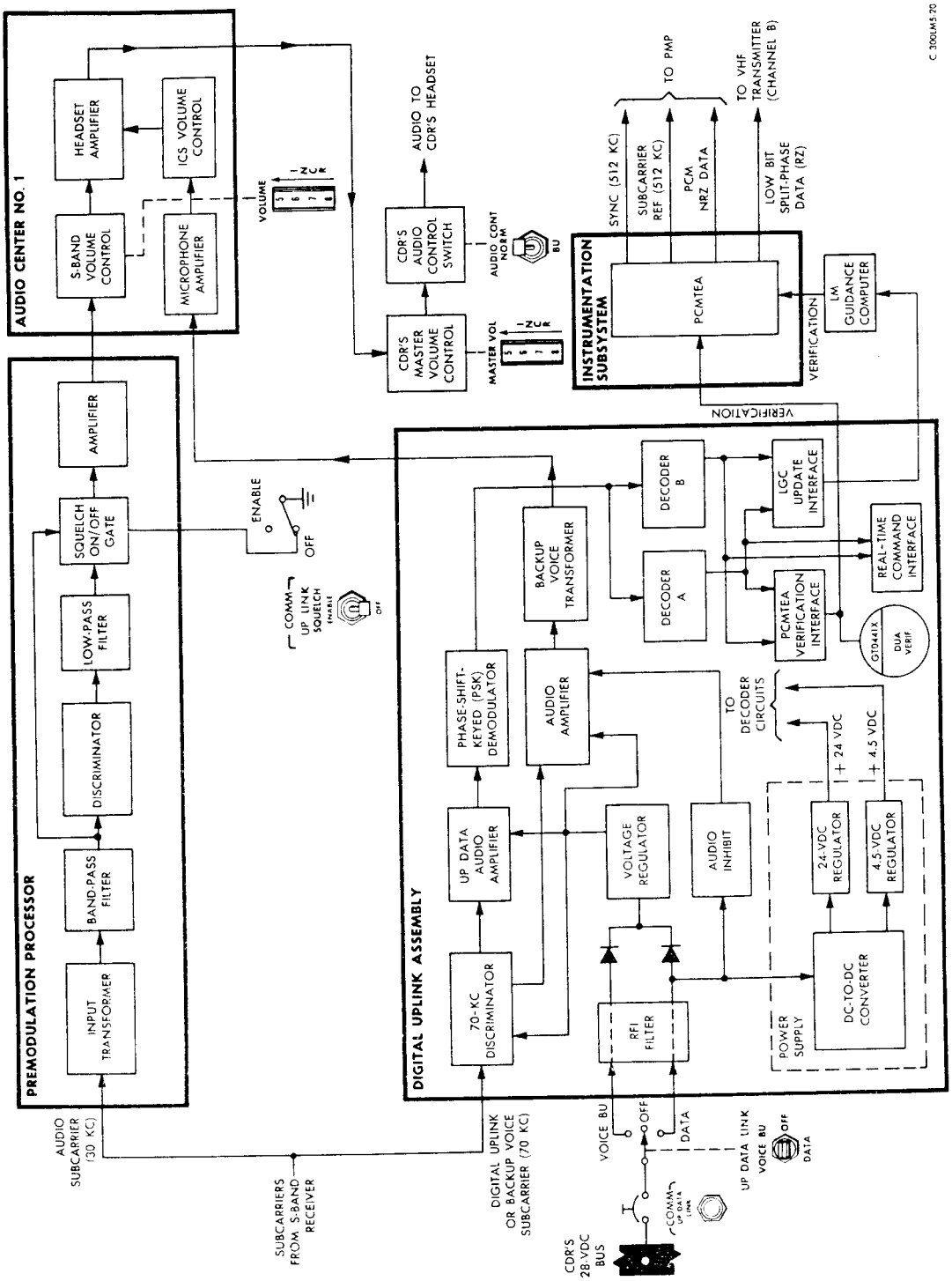

Figure 2.7-17. Digital Uplink Assembly - Block Diagram

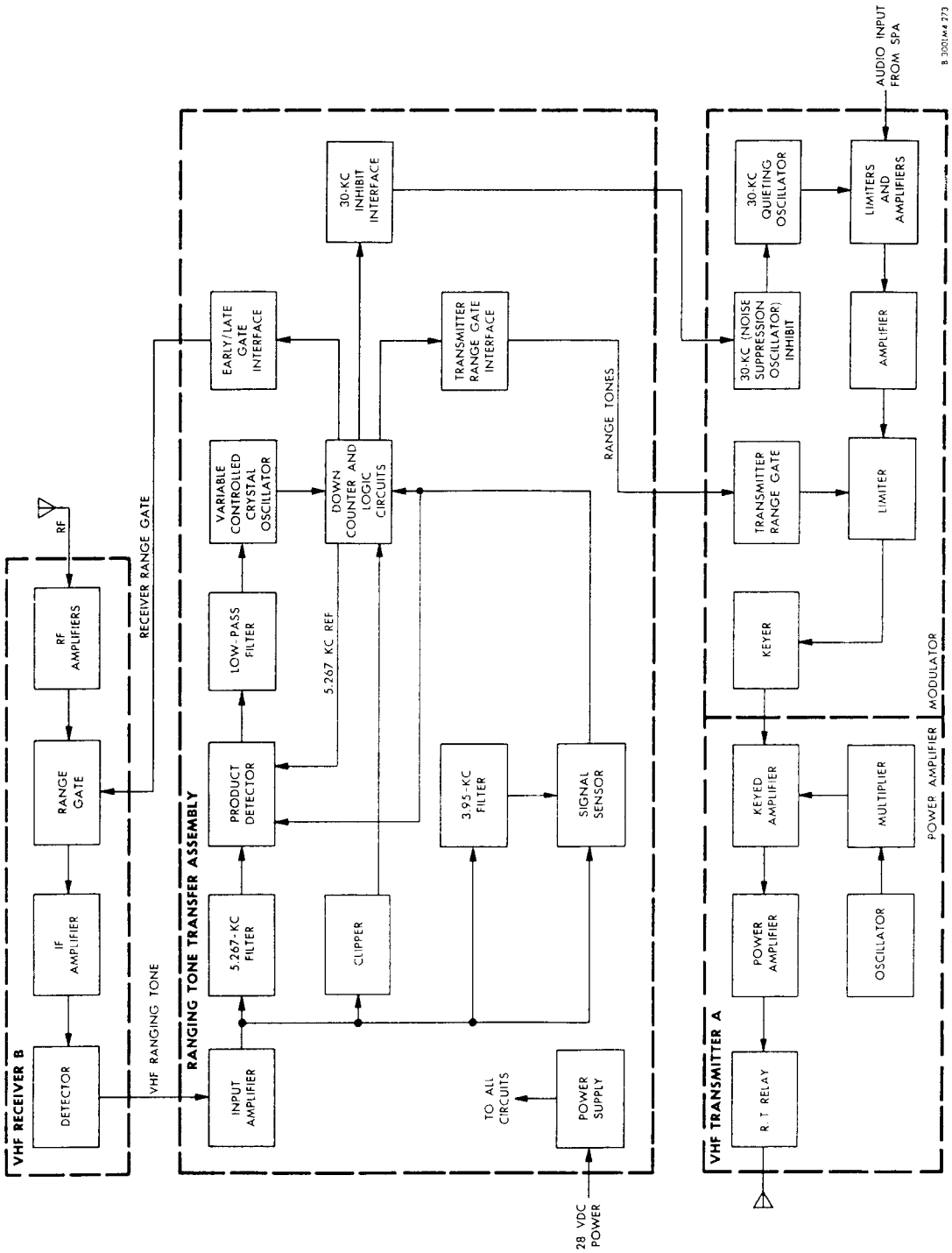

Figure 2.7-18. VHF Ranging Circuits - Block Diagram

correctly with a 3.95-kc tone, the second acquisition signal (3.95 kc combined with a 247-cps medium-coarse tone) is transmitted for 4 seconds from the CSM. If proper retransmission of this signal occurs, the track signal, a 31.6 kc fine tone, is transmitted by the CSM. When the LM retransmits this tone, the VHF ranging system operates in a closed loop and ranging may be accomplished.

The three RTTA outputs are the transmitter range gate that is used to key VHF transmitter A, the noise suppression oscillator disable signal that is used to inhibit the 30-kc oscillator output in the modulator portion of VHF transmitter A, and, during fine tone ranging only; the receiver range gate that is used in VHF receiver B to gate the fine tone ranging signal from the CSM.

The RTTA (figures 2.7-19 and 2.7-20) consists of four subassemblies; a power supply, an oscillator and counter, a product detector, and a signal sensor and interface. When the VHF A XMTR switch (panel 12) is set to VOICE/RNG, 28 volts dc is applied to the RTTA. The RTTA power supply has current-limiting features so that an RTTA malfunction will not affect the power for the VHF A transmitter.

When VHF ranging is initiated in the CSM, the CSM VHF transmitter B transmits the first of two VHF ranging acquisition signals. This 3.95-kc medium tone signal is received by LM VHF receiver B and sent to the RTTA. The input amplifier amplifies the tone signal and applies the amplified signal to the 5.267-kc bandpass filter, the clipper, the 3.95 kc filter and the rectifier. The 5.267-kc bandpass filter rejects the 3.95-kc tone, but the clipper, 3.95-kc filter, and rectifier accept the tone signal. The output of the 3.95-kc filter and the rectifier are compared in the comparator. (These three circuits comprise the signal sensor.)

If the comparison is good, the VCXO control inhibit line (midpoint ground) is held at a low level so that there is no signal to the low-pass filter to control the variable controlled crystal oscillator. This condition does not affect the oscillator output frequency; consequently, the output is at the oscillator normal frequency. The VCXO control inhibit line (at a low level) and the output of the clipper enable the 3.95-kc gate, which enables the transmitter gate. The transmitter gate output is applied to the transmitter range gate transformer. This is a pulse transformer. The secondary output is the transmitter range gate applied to the keyer of VHF transmitter A. This causes VHF transmitter A to be keyed at a 3.95-kc rate. The VCXO control inhibit line (at a low level) also inhibits the early/late gate so that no receiver range gate is generated.

The second VHF ranging acquisition signal from the CSM is the 3.95-kc tone signal combined with a 247-cps tone signal. This combined signal is the medium-coarse tone signal and the RTTA circuits respond to this signal in the same manner as for the 3.95-kc medium tone signal. VHF transmitter A is keyed at the combined rate.

When the track signal is received at the RTTA; it is a 5.267-kc gate signal, which contains six cycles of 31.6 kc. The 5.267-kc gating of 31.6 kc is accomplished in the VHF receiver B range gate circuit. The signal is amplified by the input amplifier and applied to the four circuits to which the acquisition signals were applied. The clipper and rectifier accept the 5.267-kc signal, but the 3.95-kc filter rejects the signal. As a result, the comparator does not function and the VCXO control inhibit line is raised to a high level. The clipper tries to enable the 3.95-kc gate, but the gate is inhibited by the high level of the VCXO control inhibit line.

The 5.267-kc signal is accepted by the 5.267-kc bandpass filter and applied to the product detector. The output of the 5.267-kc delay reference is the other input to the product detector. The output of the product detector is dc, which is applied to the low-pass filter since the VCXO control inhibit line is at a high level. The d-c output of the low-pass filter is applied to the variable controlled crystal oscillator to control the output frequency. The output of the oscillator is dependent on the d-c control voltage. This control voltage varies with range so that, as the oscillator output varies, it causes the 31.6-kc transmitter range gate to vary.

The oscillator output is counted down in the 252- and 126-kc down counter. The 252 kc is applied to a rectifier. The rectifier output is the noise-suppression oscillator disable signal, which is applied to the modulator of VHF transmitter A to disable the 30-kc noise suppression oscillator. The 126-kc output is applied to the 31.6-kc down counter so that 31.6 kc is generated. The 31.6 kc is applied to the 31.6-kc delay, which is enabled by 126 kc. A 31.6-kc input is also applied to the early gate.

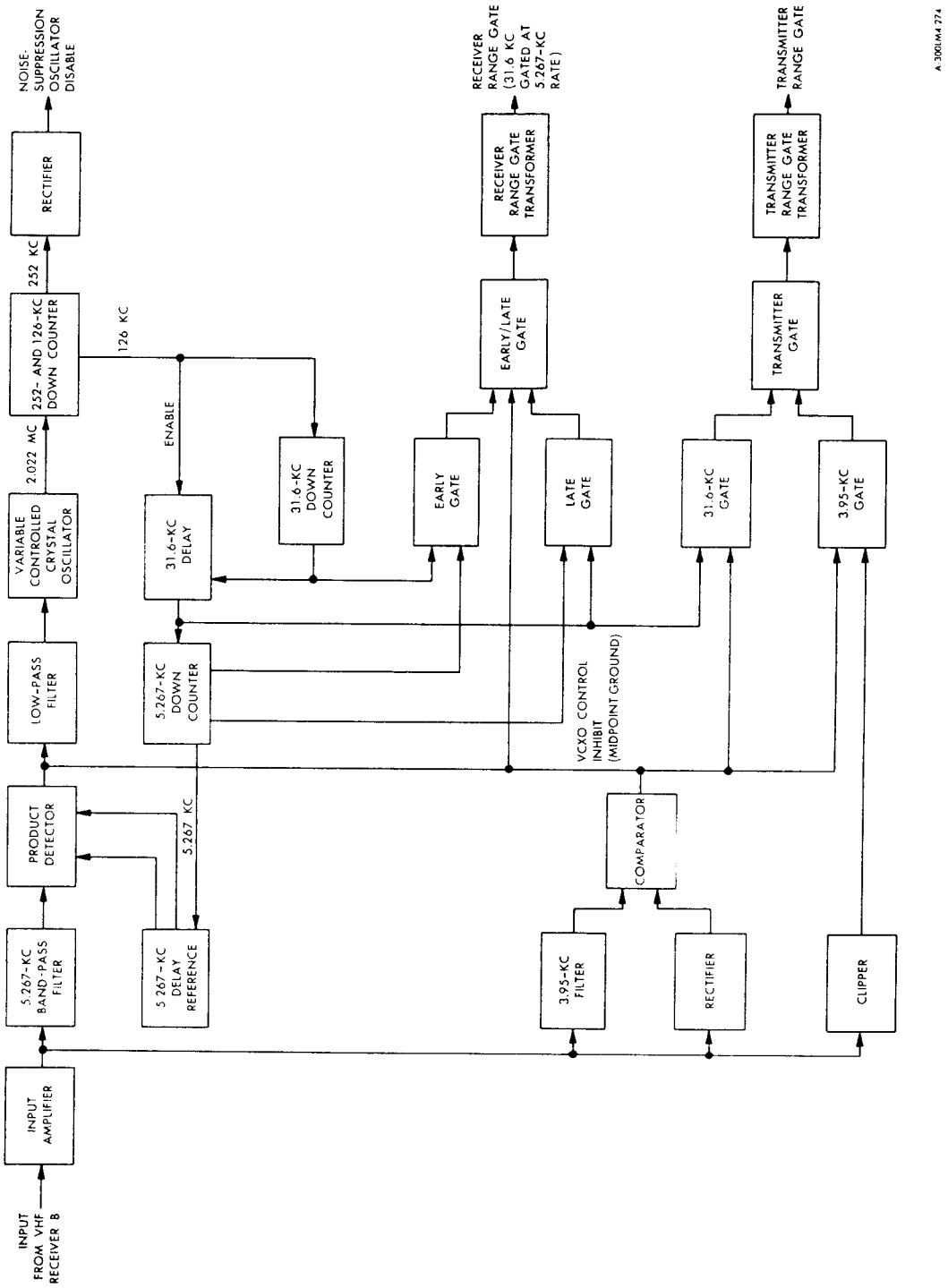

Figure 2.7-19. Ranging Tone Transfer Assembly - Block Diagram

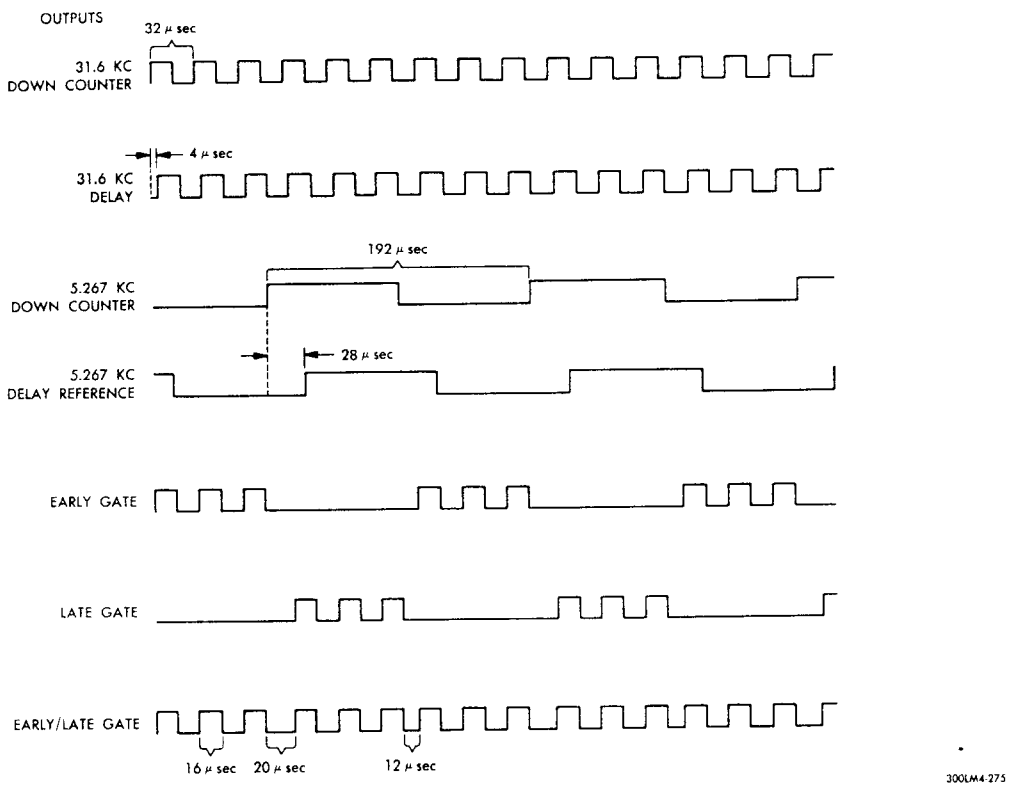

Figure 2.7-20. Ranging Tone Transfer Assembly - Timing Diagram

The 31.6-kc delay output is delayed 4.0 microseconds and applied to the 31.6 kc gate, the 5.267-kc down counter, and the late gate. The 31.6-kc gate enables the transmitter gate whose output is applied to the transmitter range gate transformer. This is a pulse transformer. The secondary output is the transmitter range gate (31.6 kc). This output is applied to the keyer of VHF transmitter A.

Two of the outputs of the 5.267-kc down counter are used to enable the early and late gates which have, respectively, 31.6 kc and 31.6 kc delayed already applied to them. The combination of early and late gate outputs and the VCXO control inhibit line (at a high level) enables the early/late gate. The early/late gate output is applied to the receiver range gate transformer. The transformer is a pulse transformer. The secondary output is 31.6 kc gated at 5.267 kc, which is the receiver range gate. This output is sent to the range gate circuit in VHF receiver B. The other output of the 5.267-kc down counter is applied to the 5.267-kc delay reference.

The output of the 5.267-kc delay reference is delayed 28 microseconds and applied to the product detector. The product detector compares the 5.267-kc output delayed 28 microseconds with the 5.267-kc input signal from the 5.267-kc bandpass filter. The result of this comparison is the d-c output voltage that controls the frequency of the variable controlled crystal oscillator so that 31.6 kc phase locked to the input signal can be generated to key VHF transmitter A.

2.7.4.3 Antenna Equipment. (See figure 2.7-21.)

The CS in-flight antenna equipment consists of two S-band in-flight antennas, an S-band steerable antenna, two VHF in-flight antennas, an S-band diplexer and RF selector switch, and a VHF diplexer and RF selector switch. The CS lunar surface antenna equipment consists of an EVA antenna for EVA-LM VHF communications.

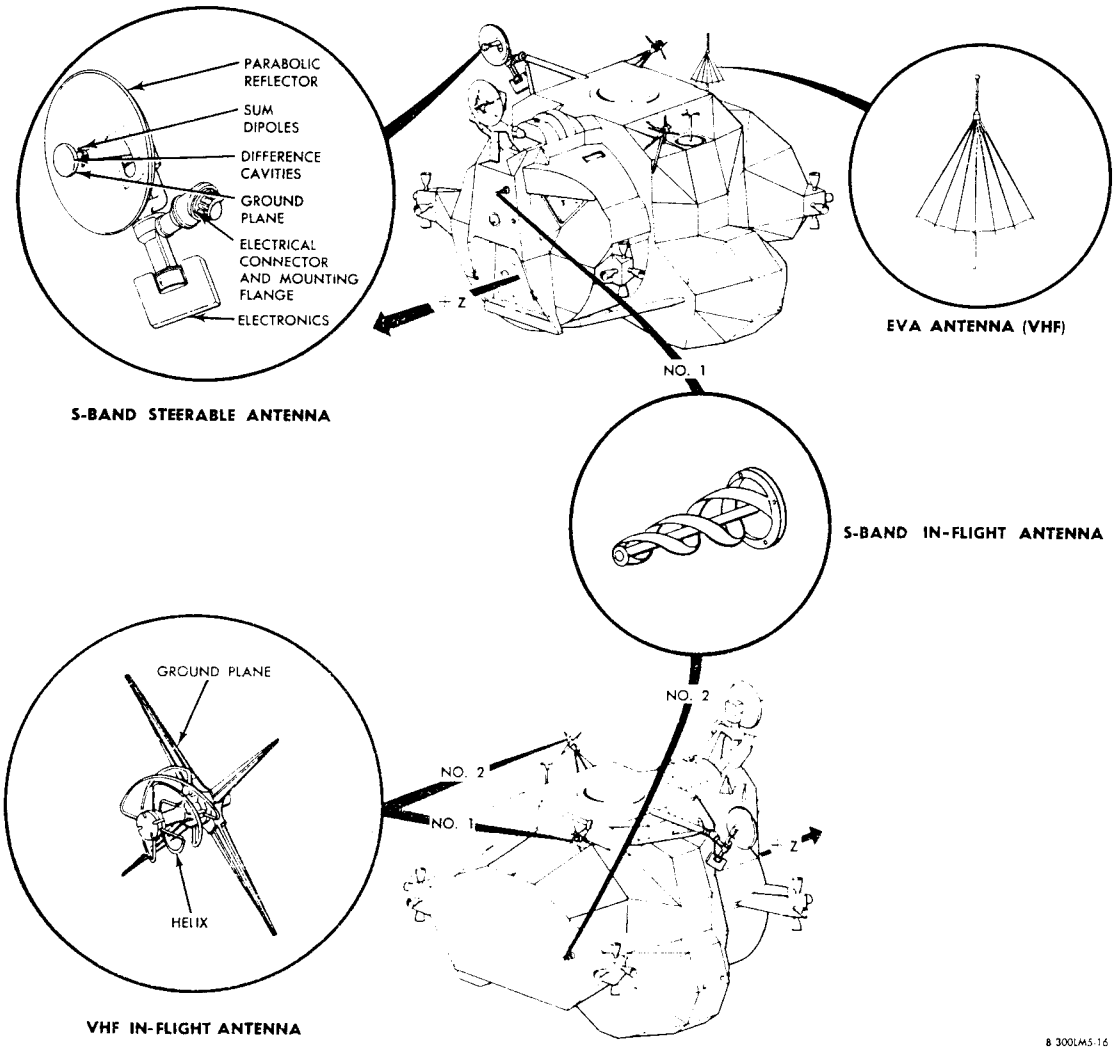

Figure 2.7-21. Communications Subsystem - Antenna Locations

2.7.4.3.1 S-Band In-Flight Antennas.

The S-band in-flight antennas are omnidirectional; one is forward and one is aft of the LM. The antennas are right-hand circularly polarized radiators that collectively cover 90% of the sphere at -3 db or better. They operate at 2282.5±5 mc (transmit) and 2101.8 mc (receive).

2.7.4.3.2 S-Band Steerable Antenna. (See figures 2.7-22 and 2.7-23.)

The S-band steerable antenna is a 26-inch-diameter parabolic reflector with a point source feed that consists of a pair of cross-sleeved dipoles over a ground plane. The prime purpose of this antenna is to provide deep-space voice and telemetry communications and deep-space tracking and ranging.

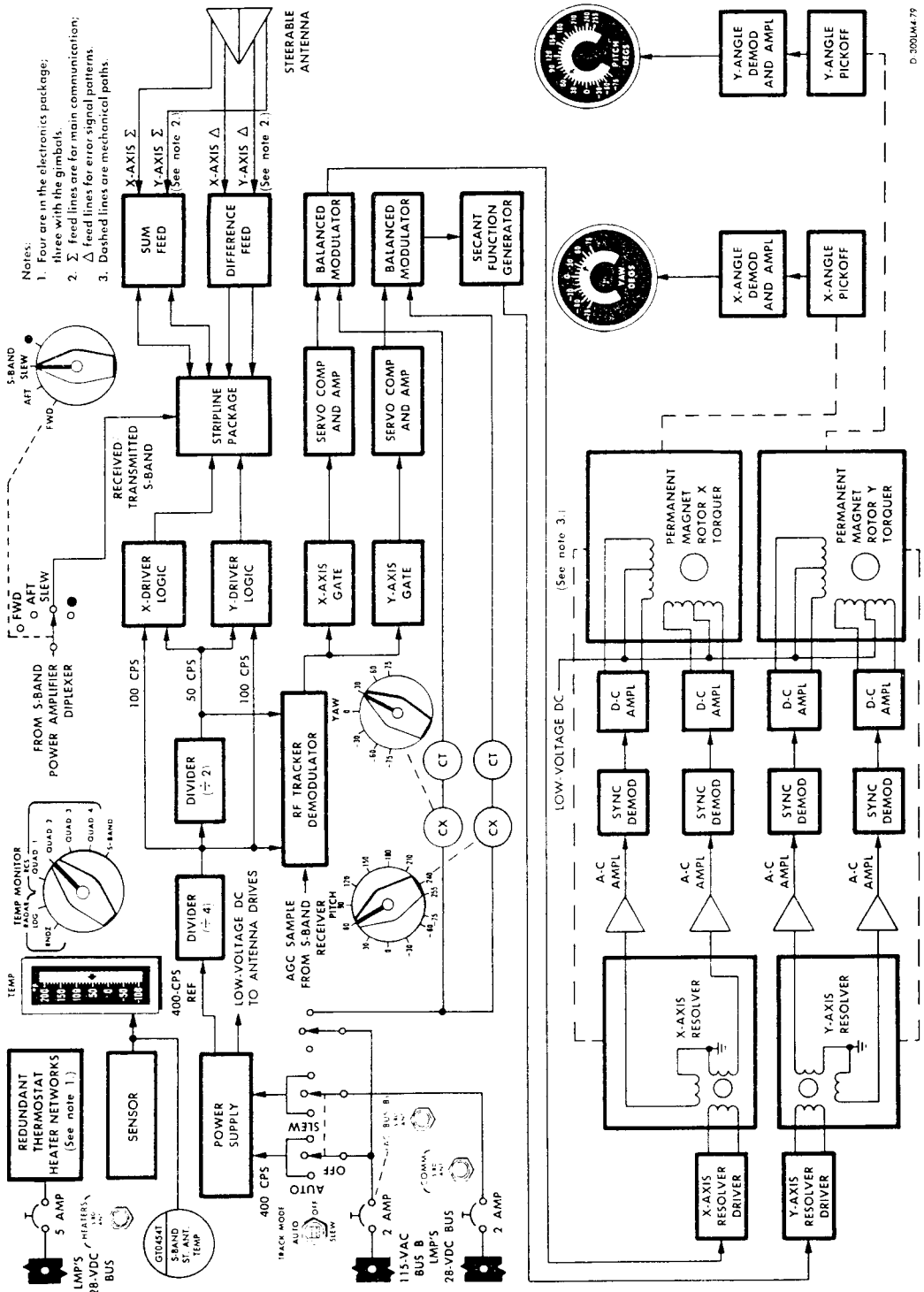

Figure 2.7-22. S-Band Steerable Antenna - Block Diagram

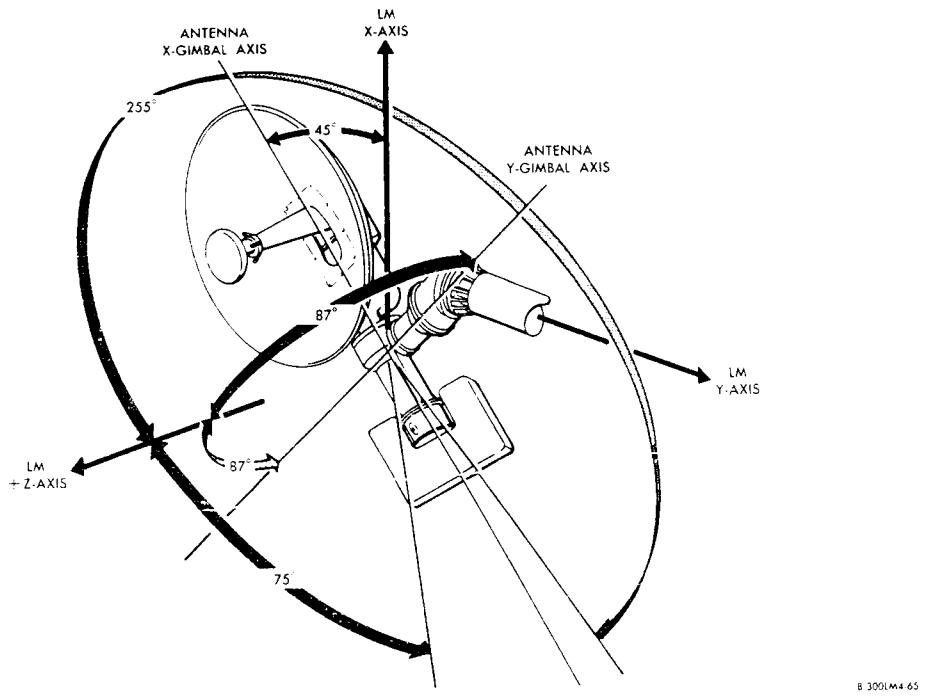

Figure 2.7-23. S-Band Steerable Antenna - Antenna Gimbaling

The S-band steerable antenna provides 174° azimuth (yaw) coverage and 330° elevation (pitch) coverage. The antenna can be operated manually or automatically. The manual mode is used for initial positioning of the antenna to orient it within ±12.5° (capture angle) of the LOS signal received from the MSFN station. Once the antenna is positioned within the capture angle, it can operate in the automatic mode. Switches and indicators on the COMMUNICATIONS ANTENNAS portion of panel 12 are used to operate the antenna.

When the S-BAND selector switch (panel 12) is set to SLEW (S-band steerable antenna selected) and the TRACK MODE switch (panel 12) is set to AUTO, the antenna tracks automatically, providing it was initially positioned within 12.5° of MSFN LOS. When in the automatic mode, signals received from a MSFN station cause the steerable antenna electronics to generate error information relative to the angular displacement and direction of MSFN LOS with respect to the existing antenna radiation axis. This information is processed and used to operate two servomotors that drive the antenna. One servomotor is mounted on the antenna X-axis; another, on the antenna Y-axis. Angular displacement data are generated by shifting the received signal pattern off the radiation axis in the X-direction and Y-direction, causing a change in strength of the received signal. If signal strength is increased when the antenna pattern is shifted, the MSFN LOS is displaced in the shifted direction; if signal strength is decreased, the MSFN LOS is displaced in the opposite direction. This periodic shifting of the antenna pattern permits generation of servo error signals by sampling the S-band receiver AGC level. The sampled AGC signal is supplied to the steerable antenna electronics subassembly and, through X- and Y-axis logic circuits, drives d-c servomotors to position the antenna to obtain the maximum received-signal level.

S-Band Steerable Antenna Heaters. Eight heater assemblies, each consisting of a heater and two (redundant) thermostats, are used to maintain the S-band steerable antenna temperature between -40° and 0° F. Four heater assemblies are installed in the electronics packages, and one each in the microwave network, X- and Y-axis gimbal housings, and X-axis gimbal spindle. The S-band steerable antenna heaters receive their power through the HEATERS: S-BD ANT circuit breaker (panel 16).

The temperature sensor in the S-band steerable antenna assembly routes the temperature signals to ERA-2 in the SCEA. The ERA-2 output is routed to the PCMTEA, CWEA, and the TEMP indicator (panel 3). The S-band steerable antenna temperature is monitored by setting the TEMP MONITOR selector switch to S-BAND and observing the TEMP indicator.

2.7.4.3.3 Deleted.

2-7.4.3.4 S-Band Diplexer and RF Selector Switch.

The S-band diplexer, connected directly to the output of the S-band power amplifier, permits simultaneous transmission and reception, using one antenna. Insertion loss is 0.9 db (transmit) and 1.3 db (receive).

The S-BAND selector switch on the COMMUNICATIONS ANTENNAS portion of panel 12 enables selection of either S-band in-flight antenna (omnidirectional), the steerable antenna, or the erectable antenna (during lunar stay only). The insertion loss of the switch, in the transmit mode of operation (2282.5 mc); is less than 0.2 db.

2.7.4.3.5 VHF In-Flight Antennas.

Two VHF in-flight antennas are used for VHF/AM communications. These are right-hand circularly polarized antennas that operate in the 259.7- to 296.8-mc range. One of these antennas is on each side of the LM, near the top of the structure.

2.7.4.3.6 VHF EVA Antenna.

The VHF EVA antenna is an omnidirectional conical antenna carried stowed on the exterior of the LM. When the LM is on the lunar surface, the antenna is unstowed by an astronaut in the LM. This antenna is used for LM-EVA communications.

2.7.4.3.7 VHF Diplexer and RF Selector Switch.

The VHF diplexer permits simultaneous transmission and reception, using one antenna at two frequencies. During in-flight phases of the mission, the diplexer permits voice transmission over one channel while reception is accommodated over the other channel. The normal LM-CSM communications mode is simplex over channel A; channel B is used for data transmission and voice backup.

The VHF selector switch on the COMMUNICATIONS ANTENNAS portion of panel 12 enables selection of either VHF in-flight antenna (omnidirectional) or the EVA antenna (during lunar stay). The insertion loss of the switch, in the transmit mode of operation (296.8 and 259.7 mc), is less than 0.2 db.

2.7.5 PERFORMANCE AND DESIGN DATA.

The performance and design data for the CS are given in table 2.7-4.

2.7.6 OPERATIONAL LIMITATIONS AND RESTRICTIONS.

The operational limitations and restrictions for the CS are covered in paragraph 2.7.6.1 and 2.7.6.2.

2.7.6.1 Antennas.

The S-band steerable antenna is mounted on a two-degree-of-freedom gimbal. Elevation (pitch) and aximuth (yaw) are zero when the antenna LOS is parallel to the LM Z-axis in a positive direction. The antenna is tilted 45° in the LM X-axis Y-axis. (See figure 2.7-23.) Slewing the antenna toward the antenna +X-axis is positive elevation. Slewing the antenna toward the antenna +Y-axis is positive azimuth. The angles of elevation and azimuth coverage are shown in figure 2.7-23. The restrictions in elevation and azimuth are shown in figure 2.7-24.

The S-band omnidirectional in-flight antennas cover equivalent overlapping regions. The forward in-flight antenna covers a 170° cone about a line in the X-Z plane 20° above the + Z-axis. The rear antenna covers a 170° cone about a line in the X-Z plane 20° above the -Z-axis.

Table 2.7-4. Communications Subsystem - Performance and Design Data

Equipment	Mode (Status)	Power Requirements		Operating Frequency (mc)
		D-C Watts	A-C Watts	
S-band transmitter-receiver	Primary or secondary	36.0	0	
Receiver				2101.8
Transmitter				2282.5
S-band power amplifier and diplexer	Primary or secondary	72.0	0	
S-band steerable antenna				
Electronics	Slew	7.6	27.9	
	Auto	0.7	4.0	
Heaters	On	51.7	0	
VHF A transmitter	Voice	30.0	0	296.8
	Not transmitting	3.5	0	
VHF A receiver	On	1.2	0	296.8
VHF B transmitter	Voice	28.9	0	259.7
	Data	31.7	0	
	Not transmitting	3.5	0	
VHF B receiver	On	1.2	0	259.7
Ranging tone transfer assembly	On	5.0	0	
Signal-processor assembly				
Premodulation processor	On	4.3	0	
Audio center (one)	On	4.8	0	

Table 2.7-4. Communications Subsystem - Performance and Design Data (cont)

Equipment	Mode (Status)	Power Requirements		Operating Frequency (mc)
		D-C Watts	A-C Watts	
Digital uplink assembly	Uplink data	12.5	0	
	Voice backup	2.5	0	
Biomedical sensors	On	3.0	0	
CS displays	On	3.0	0	
TV camera	On	6.0	0	

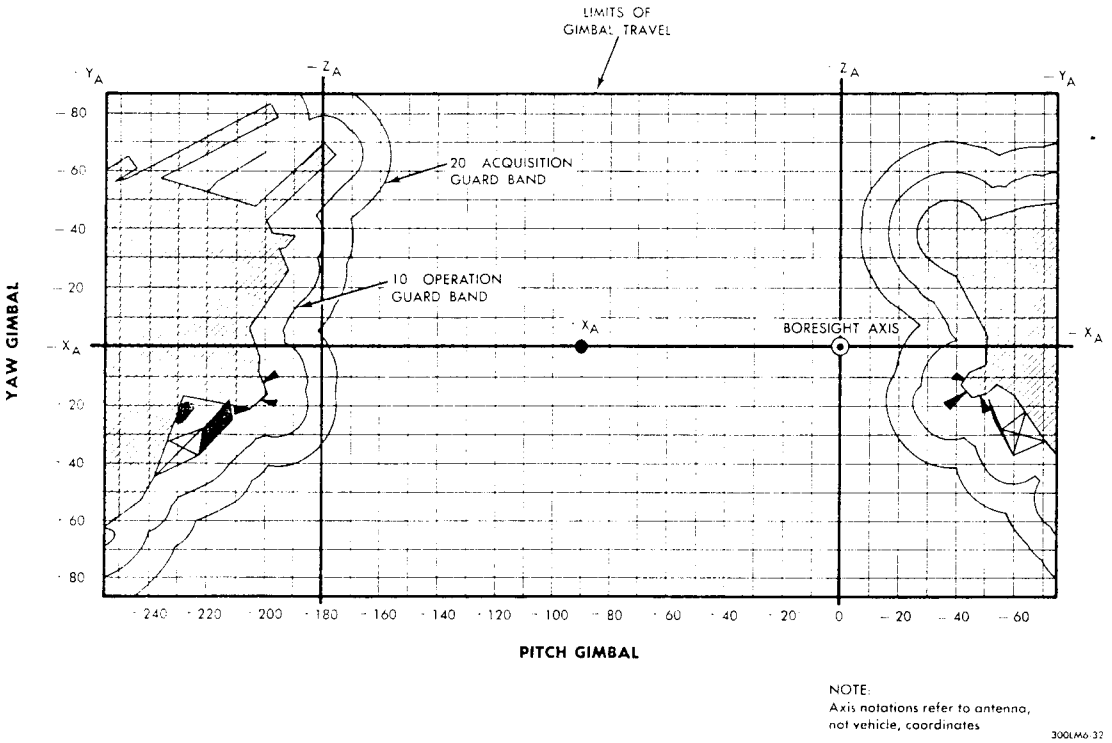

Figure 2.7-24. S-Band Steerable Antenna - Vehicle Blockage Diagram

2.7.6.2 General.

The limitations and restrictions imposed on the CS during the mission are as follows:

- The maximum range of telemetry transmission between the LM and the CSM is 320 nautical miles. Greater ranges will cause loss of telemetry transmission.
- The LOS range of the VHF transmitter is limited to 740 nautical miles. Greater ranges will cause loss of VHF communications.
- If electromagnetic interference (EMI) in system is identified as caused by the tracking light (regular pulses on audio channel or pulses at approximately 1 pps on SIGNAL STRENGTH meter), the tracking light may be turned off until acquisition of data is complete.
- Once the S-band steerable antenna is unstowed, it cannot be stowed for the remainder of the flight. If the steerable antenna is locked on the uplink signal, RCS thruster impingement will have no effect on antenna orientation. In the absence of the uplink signal, the effect of the LM or CSM plume can cause the steerable antenna to be reoriented.
- The S-band steerable antenna provides automatic tracking when its RF axis is aligned to within ±12.5° (capture angle) of MSFN LOS. Exceeding ±12.5° results in inability to acquire the MSFN signal.
- The maximum S-band steerable antenna tracking velocity is 20°/second.
- The maximum S-band steerable antenna tracking acceleration is 60°/second/second.
- The activation time for the S-band transmitter-receiver is 30 seconds from application of power; 5 seconds, after a change of modulation mode (FM to PM, or PM to FM). No S-band communication will result until warmup is completed.
- The warmup time for the S-band power amplifier is 60 seconds maximum. The recycle time after RF interruption is 20 seconds. If this restriction is not observed only low-power S-band transmission is available.
- The warmup time for the S-band steerable antenna electronics is 60 seconds maximum. No S-band communications will result before warmup is completed, unless one of the S-band in-flight antennas can be used.
- S-band steerable antenna operating temperature must be maintained at -60° to +155° F. If these temperature limits are exceeded, S-band communications are unreliable.

2.8 EXPLOSIVE DEVICES SUBSYSTEM.

2.8.1 INTRODUCTION.

The Explosive Devices Subsystem (EDS) permits the astronauts to operate or enable various LM equipment, using explosive devices. The EDS controls deployment of the landing gear; pressurization of the descent, ascent, and reaction control propellant tanks; venting of descent propellant tanks; and separation of the ascent and descent stages.

The general location of all components of the EDS is shown in figure 2.8-1. Electrical power to activate the components in both systems is supplied through circuit breakers on the Commander's circuit breaker panel (11) and the LM Pilot's circuit breaker panel (16). Switches on the EXPLOSIVE

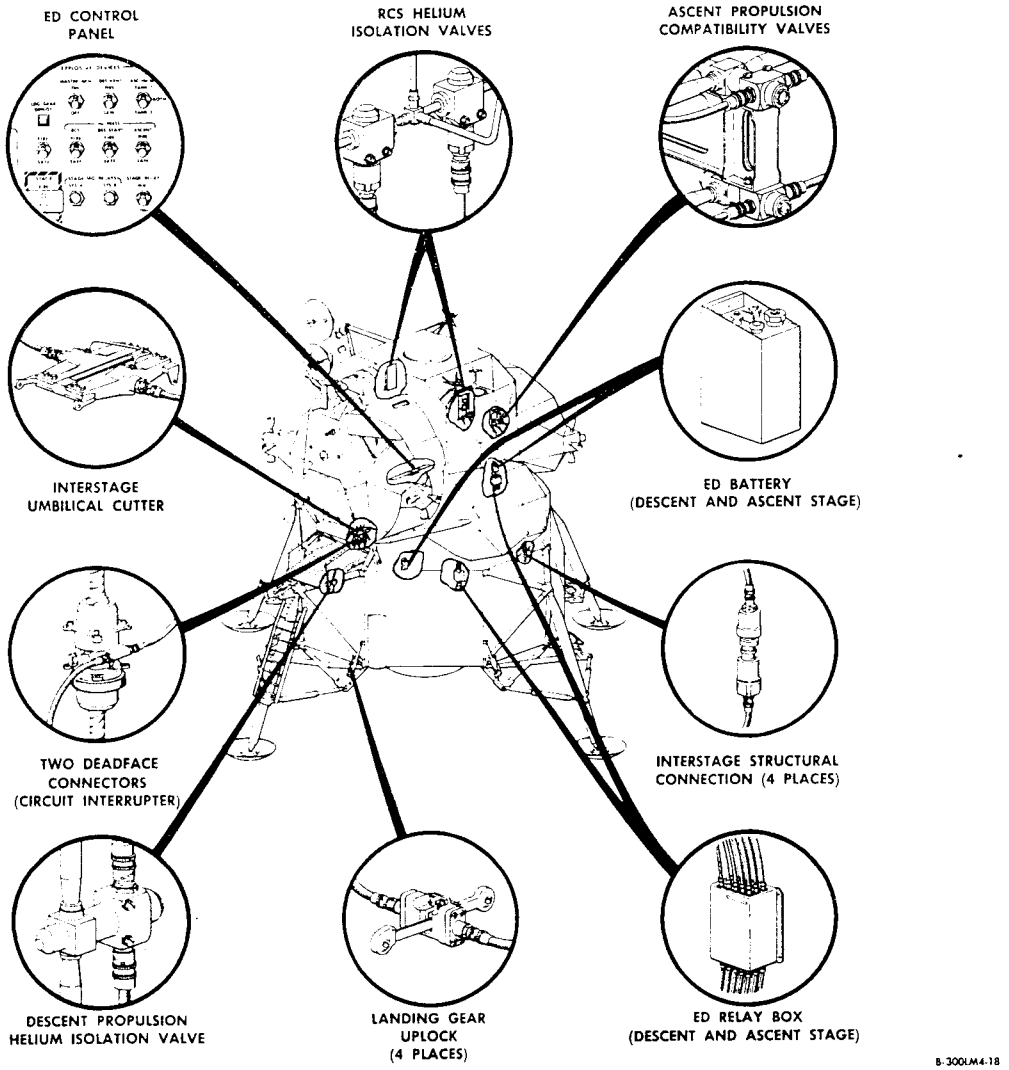

Figure 2.8-1. Explosive Devices - Component Location

DEVICES portion of panel 8 route this power to relays in the ED relay boxes. The relay contacts route ED battery current to explosive cartridges located in LM subsystems. The explosive devices actuated by the cartridges perform the EDS functions.

Ascent propellant tank pressurization and staging (separation of nuts and bolts, electrical circuit interruption, interstage umbilical cable severance) are performed automatically if the ABORT STAGE pushbutton (panel 1) is pressed.

There are two separate systems (A and B) in the EDS. (See figure 2.8-2.) The systems operate in parallel and provide complete redundant circuitry; each system has its own 37.1-volt d-c battery, relays, time-delay circuits, fuse-resistors, buses, and explosive cartridges. Two separate cartridges are provided for each EDS function. Each cartridge uses power from a separate ED bus and can perform its task without the other cartridge.

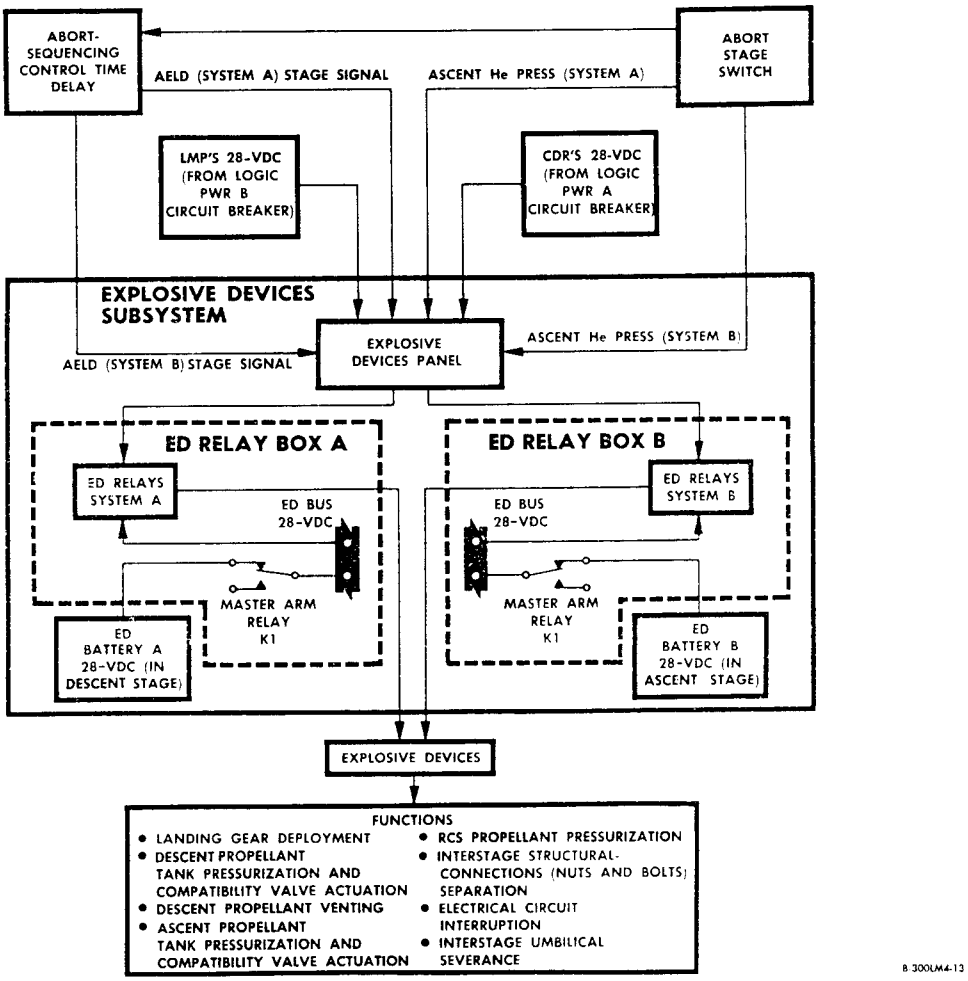

Figure 2.8-2. Explosive Devices Subsystem - Overall Block Diagram

2.8.2 SUBSYSTEM INTERFACES.

EDS relays are actuated by 28 volts dc received through the Commander's and LM Pilot's buses of the Electrical Power Subsystem (EPS). Contacts of these relays route ED battery current to associated explosive devices in the Main Propulsion Subsystem (MPS) and the Reaction Control Subsystem (RCS) and to explosive devices that enable landing gear deployment, interstage structural connection separation, electrical circuit interruption, and interstage umbilical severance. In the MPS, explosive devices enable descent propellant tank pressurization and venting, and ascent propellant tank pressurization. In the RCS, explosive devices enable RCS propellant tank pressurization.

The EDS receives two commands from the control electronics section (CES) of the Guidance, Navigation, and Control Subsystem (GN&CS). After the descent engine is fired, a delayed descent engine-on command is received from the CES. This command actuates the ED relay associated with the explosive device that enables descent propellant tank pressurization (with supercritical helium). An automatic stage command is received from the CES when the ascent engine is fired. This command actuates the ED staging sequence relays.

ED relay status and malfunction signals are routed to the Instrumentation Subsystem (IS), which processes them for telemetering to MSFN. If the master arm relay or the staging sequence relays malfunction, a signal is routed to the failure-detection circuits in the caution and warning electronics assembly (CWEA) of the IS, which causes the ED RELAYS caution light (panel 2) and the appropriate STAGE SEQ RELAYS SYS A or SYS B component caution light (panel 8) to go on. Landing gear deployment is monitored by sensors in the landing gear assemblies. A composite signal from these sensors is sent to the IS, where it is processed for telemetering to MSFN. The signal causes a gray LDG GEAR DEPLOY talkback display (panel 8).

2.8.3 FUNCTIONAL DESCRIPTION. (See figure 2.8-3.)

The redundant circuits and components of the EDS operate simultaneously, as two independent systems (A and B). Either system can perform the EDS functions. Each function is completed before initiation of the next function. The EDS functions are performed in the following sequence:

- Landing gear deployment
- Reaction Control Subsystem (RCS) propellant tank pressurization
- Descent propellant tank prepressurization (ambient helium)
- Descent propellant tank pressurization (supercritical helium)
- Descent propellant tank venting
- Ascent propellant tank pressurization
- Interstage nut-and-bolt separation and ascent stage deadfacing (occur simultaneously)
- Interstage umbilical severance

EDS systems A and B are operated from the EXPLOSIVE DEVICES portion of panel 8. Power (28 volts dc) from the EPS, to actuate the relays in the system A and system B relay boxes, is routed through the ED: LOGIC PWR A circuit breaker (panel 11) and the ED: LOGIC PWR B circuit breaker (panel 16), respectively. Power for the cartridges is supplied by the ED batteries. When the MASTER ARM switch is set to ON, each battery supplies power to an identical redundant bus in the ED relay boxes, arming the firing circuits and enabling all explosive devices of the LM. Firing of any explosive device is controlled by its respective switch on panel 8, except that the descent propellant supercritical helium valves are fired on command from the CES (refer to paragraph 2.8.3.4). Automatic initiation of the staging sequence can be generated by the CES, and EDS arming and ascent propellant tank pressurization can be initiated by pressing the ABORT STAGE pushbutton (panel 1).

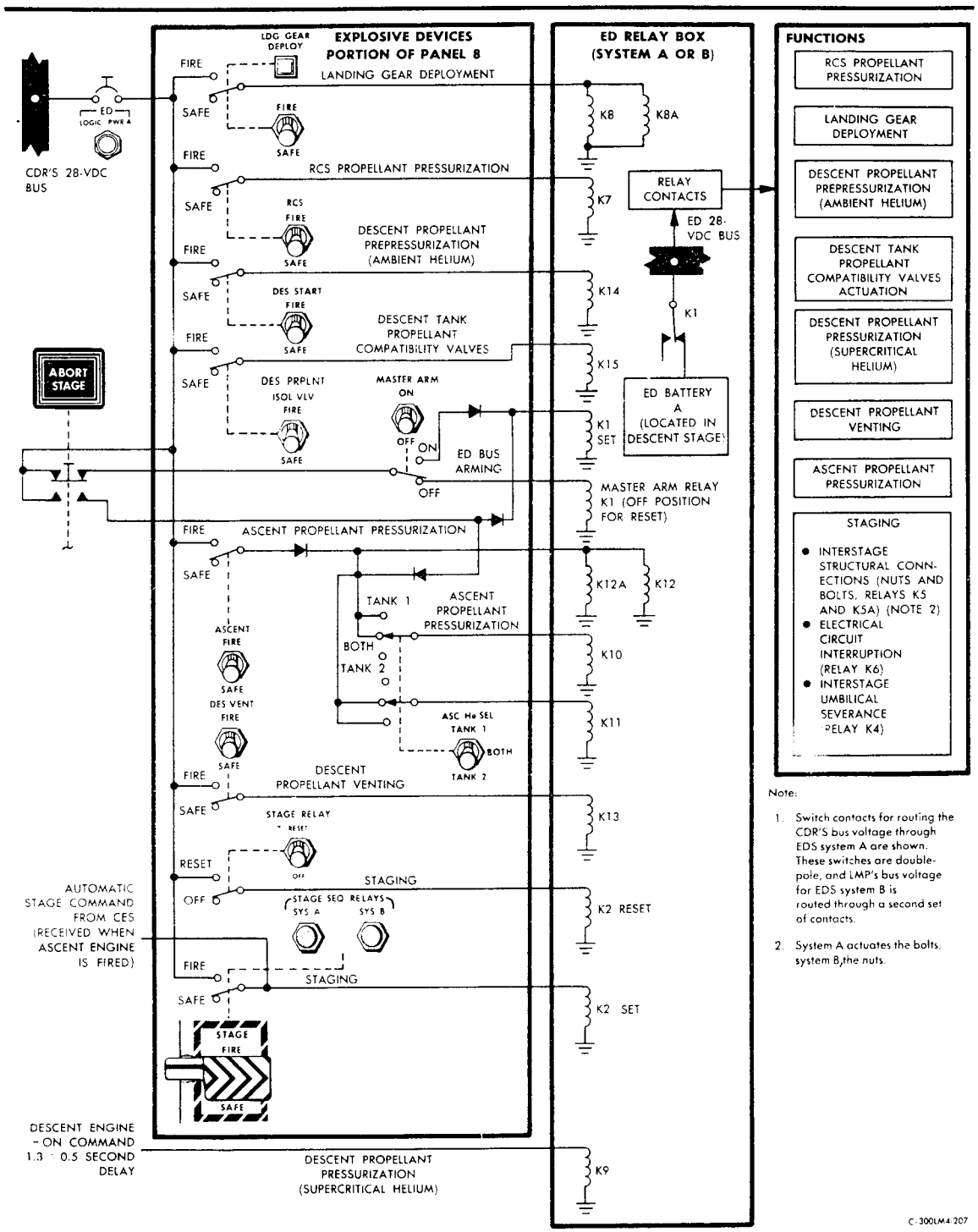

Note:

1. Switch contacts for routing the CDR'S bus voltage through EDS system A are shown. These switches are double-pole, and LMP's bus voltage for EDS system B is routed through a second set of contacts.
2. System A actuates the bolts; system B, the nuts.

Figure 2.8-3. Explosive Devices Subsystem - Overall Functional Diagram

The status of the master arm relay K1, and the stage sequence relays K2, K3, K4, K5, K5A, and K6, is monitored. Inadvertent operation of any of these relays is indicated by a master alarm, an ED RELAYS caution light, and the appropriate STAGE SEQ RELAYS component caution light. When the MASTER ARM switch is set to ON, both component caution lights, SYS A and SYS B, go on to indicate that both ED buses are armed. MSFN is provided with a telemetry signal for monitoring the status of the master arm and stage sequence relays.

Contacts of the remaining ED relays (K7 through K15) form a series output that provides MSFN with telemetry signals for constant monitoring of the status of these relays. If any one, or combination, of these relays operates inadvertently, their telemetry signal does not distinguish which relay or relays are at fault.

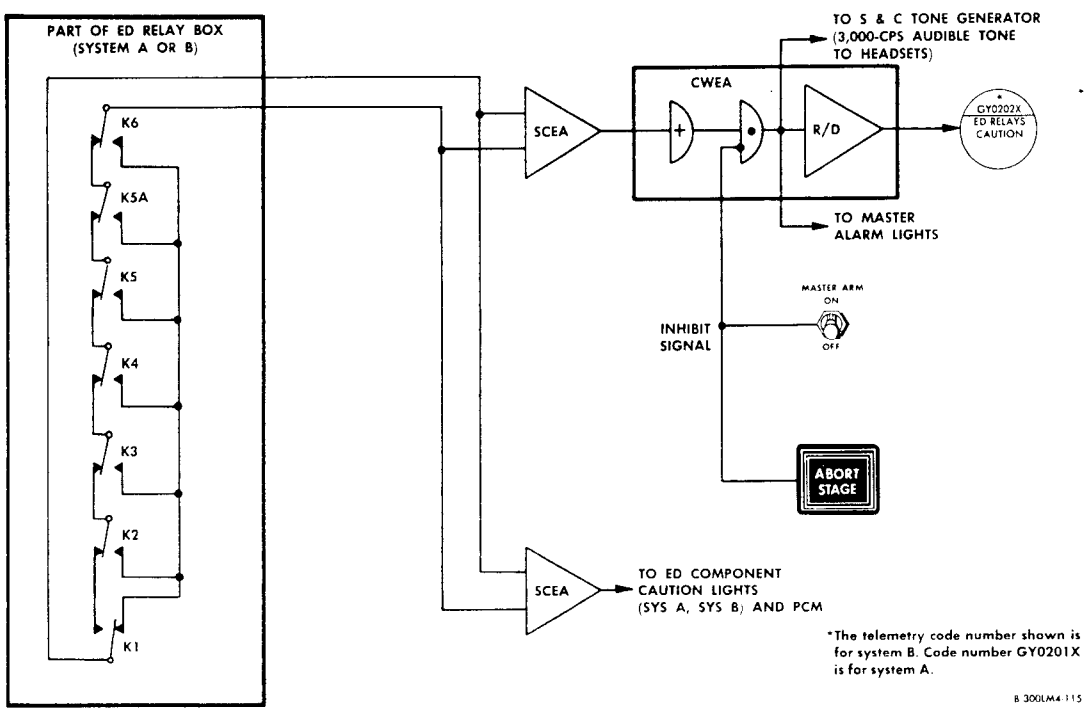

Figure 2.8-4. Stage Sequence Monitoring (Relays K1 through K6) - Simplified Schematic Diagram

2.8.3.1 Circuitry.

The ED logic circuits are protected by circuit breakers; the firing circuits, by current-limiting fuses. Circuit breakers route the power needed to energize the ED relays. Additionally, they protect wiring against deterioration caused by faults or overloads.

ED circuits are the only electrical load connected to the ED power bus; they do not receive power from the EPS bus. The EPS bus energizes the ED relay coils. The explosive devices switch (panel 8) used determines which relay coil is energized. Relay contacts then route ED battery power (battery A and battery B) from the redundant ED buses to the devices (or cartridges) to perform a specific function.

The time delays preclude the possibility of initiating a function out of sequence. All ED firing circuits and the EPS circuits are shielded. Both systems are electrically and physically isolated from one another and the wiring is routed separately wherever possible. The circuits are not grounded; EPS and instrumentation ground returns are separated and in no way cause the ED circuits to become grounded.

EDS design is fail-safe in all respects. There are no mechanical or electrical cross-overs, except for the mechanical actuation in the ED switches. Failure to arm or operate one EDS system (A or B) does not prevent performance of a function. Redundant wiring is used where loss of a single lead could prevent initiation or control of a function.

All initiators are protected against static electricity by means of a shorting circuit. The cartridge assemblies are connected to the ED negative bus at all times. When the control relay is energized, ED bus voltage is routed to the initiators in the cartridge assemblies. A fuse-resistor, in series with the circuit (between the pyro bus and control relay), protects the initiator bridgewire circuit and ED batteries against overloads. The fuse-resistors are rated at 20 amperes for 100 milliseconds with 1-ohm resistance.

2.8.3.2 ED Bus-Arming. (See figure 2.8-5.)

The MASTER ARM switch is a triple-pole double-throw switch, with a common two-position, lever-locking toggle mechanism for the OFF and ON positions. Before performing any EDS functions, this switch must be set to ON to arm the ED bus. If the ED RELAYS caution light and the SYS A or SYS B component caution light go on due to the MASTER ARM switch failing in the ON position or its relay K1 for one system (A or B) closing inadvertently, the affected EDS system should be deactivated by opening the ED: LOGIC PWR A or ED: LOGIC PWR B circuit breaker. A subsequent EDS failure may jeopardize crew safety.

Setting the MASTER ARM switch to ON applies 28 volts dc from EPS systems A and B to the set coils of latching control relays K1 (in EDS systems A and B). Contacts of K1 connect the ED batteries (A and B) to both ED buses, arming the EDS and enabling performance of all functions. The buses are also armed by pressing the ABORT STAGE pushbutton, when staging is to be performed with automatic ascent engine firing. The ABORT STAGE switch bypasses the MASTER ARM switch and sets the K1 relays.

Setting the MASTER ARM switch to OFF, deenergizes the ED buses. This position applies 28 volts dc from EPS systems A and B to the reset coils of relays K1 and breaks the circuit between the ED batteries and ED buses.

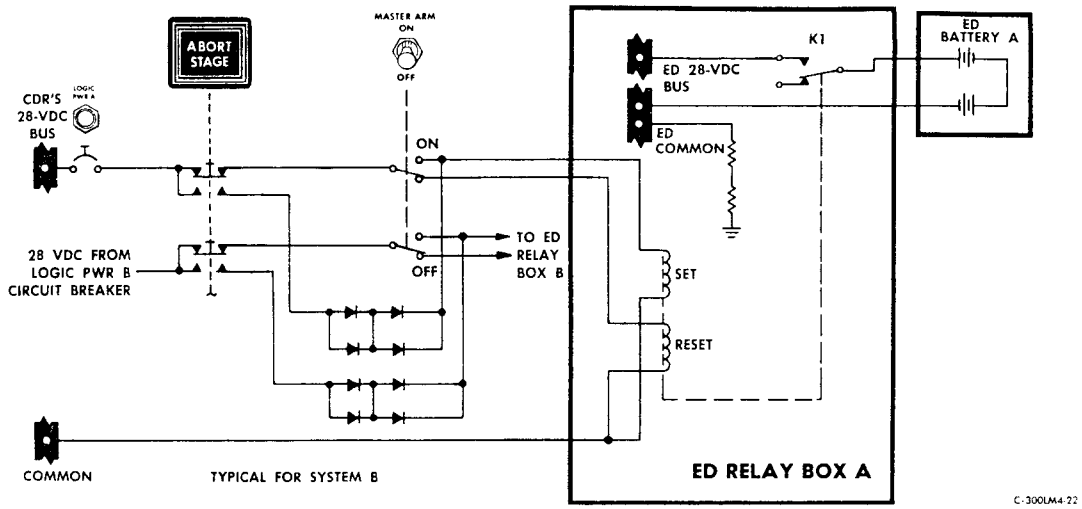

Figure 2.8-5. Bus-Arming Control - Simplified Schematic Diagram

2.8.3.2.1 STAGE SEQ RELAYS SYS A and SYS B Component Caution Lights.

The STAGE SEQ RELAYS SYS A and SYS B component caution lights are yellow advisory lights. When the MASTER ARM switch is ON, and the master arm relay (K1) of both system A and B is set, the STAGE SEQ RELAYS SYS A and SYS B lights go on to indicate that both ED systems are armed and ready to perform an EDS function. A telemetry signal advises MSFN that both systems are armed. If any of the relays used in the staging function (K1 through K6) inadvertently operate, the corresponding SYS A or SYS B STAGE SEQ RELAYS component caution light and the ED RELAYS caution light (panel 2) go on. (When a caution light is activated, the MASTER ALARM pushbutton/lights (panels 1 and 2) also go on and a tone is generated. Pressing either MASTER ALARM pushbutton/light turns off the lights and the tone.) When the MASTER ARM switch is ON or the ABORT STAGE switch is pressed, an inhibit signal is sent to the caution and warning electronics assembly (CSEA) which inhibits the ED RELAYS caution light, and the MASTER ALARM light and tone. MSFN is provided with telemetry signals for monitoring the status of the master arm relays and the stage sequence relays.

If there is a master alarm, and the ED RELAYS caution light, and associated STAGE SEQ RELAYS component caution light go on, indicating the inadvertent transfer of the master arm or staging sequence relays, the STAGE RELAY RESET switch should be set momentarily to the RESET position to reset stage relay K2. If the ED RELAYS caution light and the STAGE SEQ RELAYS component caution light go off, K2 had failed temporarily. If the lights remain on, the failure is due to relays K1, or K3 through K6.

2.8.3.3 Landing Gear Deployment. (See figure 2.8-6.)

The landing gear, stowed in the retracted position at launch, remains retracted until just prior to LM-CSM separation. The LDG GEAR DEPLOY switch is used to deploy the landing gear assemblies.

An uplock device, with two end detonator cartridges (EDC's), restrains each of the four landing gear assemblies (legs). Each EDC is controlled and fired by two separate control and fire circuits in parallel. Firing either EDC in the landing gear uplock results in landing gear deployment. Setting the MASTER ARM switch to ON arms the ED buses. Momentarily holding the LDG GEAR DEPLOY switch to FIRE routes power from EPS systems A and B to the coils of relays K8 and K8A in both ED systems. Contacts of these relays route ED battery power to the eight landing gear uplock EDC's. When all four landing gear assemblies have been deployed, EPS power (28 volts dc) is routed through closed contacts of eight switches (one on each side of each landing gear assembly) to provide a gray LDG GEAR DEPLOY talkback display. (See figure 2.8-7.) The eight switch closures provide MSFN with a combined telemetry signal for monitoring landing gear deployment.

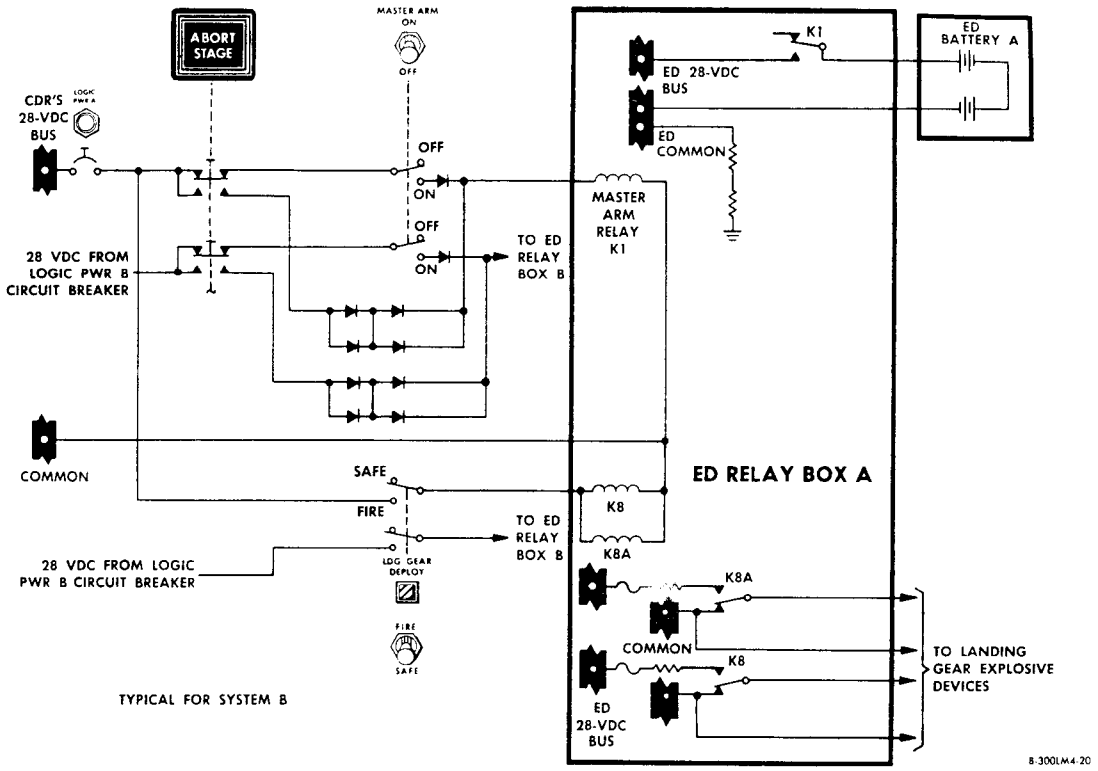

Figure 2.8-6. Landing Gear Deployment - Simplified Schematic Diagram

2.8.3.4 Descent Propellant Tank Prepressurization. (See figure 2.8-8.)

An ambient helium isolation valve is used in conjunction with two compatibility valves (each downstream of its respective quad check valve in the descent stage) when prepressurizing the descent propellant tanks. The valves are normally closed. Setting the MASTER ARM switch to ON arms the ED buses; momentarily holding the DES START He PRESS switch to FIRE routes power from EPS to the coil of relays K14 in both EDS systems. Contacts of K14 simultaneously route ED battery power to the cartridges in the ambient helium isolation valve, opening the valve and allowing ambient helium to flow to the descent propellant tank compatibility valves. Momentarily holding the DES PRPLNT ISOL VLV switch to FIRE routes EPS power to the coil of relays K15 in both EDS systems. Contacts of K15 route ED battery power to open the compatibility valves. Ambient helium then flows freely to the descent engine fuel and oxidizer tanks, pressurizing them. The increase in propellant tank pressure is observed on the FUEL and OXID PRESS indicators (panel 1); the drop in ambient helium tank pressure. on the HELIUM indicator (panel 1). Ambient helium prepressurization permits fuel to flow through the fuel/helium heat exchanger before cyrogenic helium flow through the helium/helium heat exchanger is initiated.

With the MASTER ARM switch set to ON and the descent engine fired, relay K9 in both ED relay boxes receives a signal from the CES after a 1.3-second delay. Contacts of K9 route ED battery power to the supercritical helium isolation valve, opening the valve. Helium from the cryogenic helium storage vessel pressurizes the descent propellant tanks in place of the expended ambient helium. Descent helium pressure malfunctions light the DES REG warning light (panel 1). (Refer to table 2.9-3.)

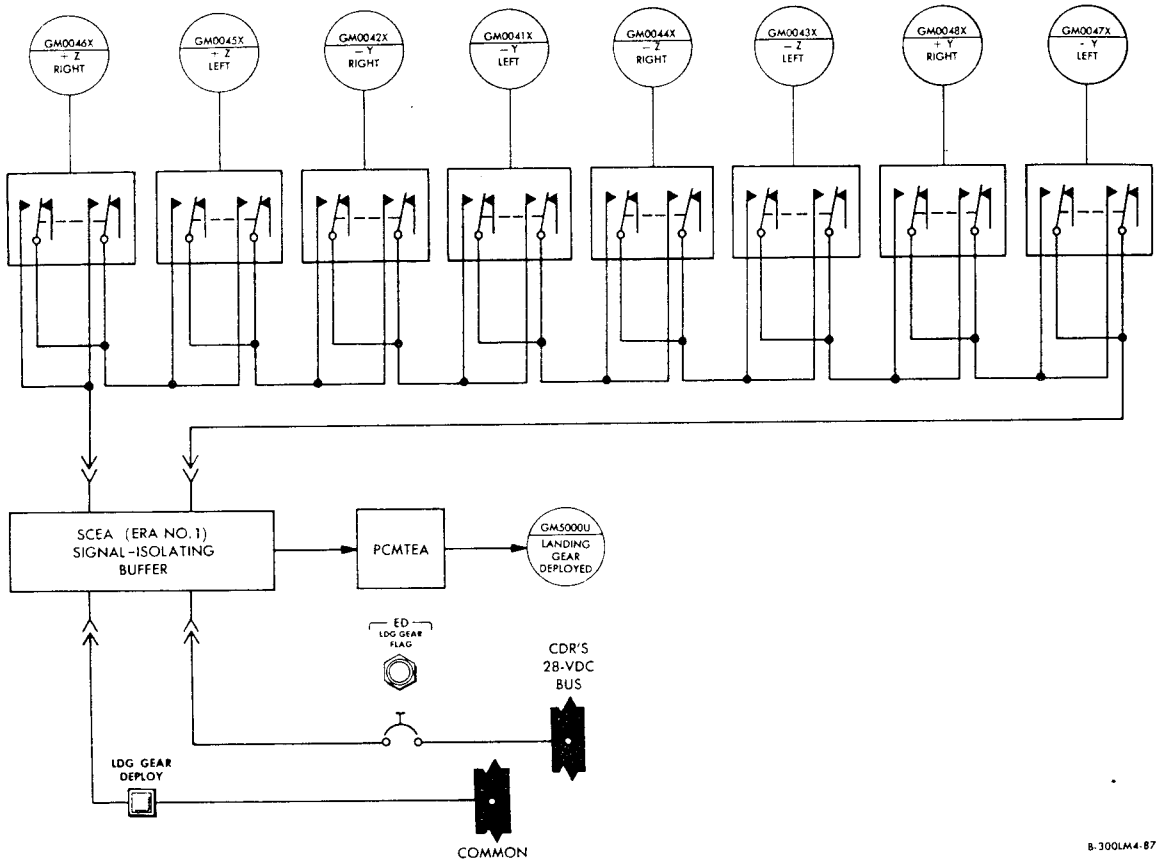

Figure 2.8-7. Landing Gear Switches - Schematic Diagram

2.8.3.5 Staging. (See figure 2.8-9.)

Stage separation involves simultaneous operation of the circuit interrupters (deadfacing) and separation of the interstage structural connections (nuts and bolts), then umbilical severance (cable cutting). This is accomplished by cartridges fired by operation of the STAGE switch or a signal from the CES when the ascent engine is fired. The signal from the CES bypasses the STAGE switch, which is not normally used.

Setting the MASTER ARM switch to ON arms the ED buses; setting the STAGE switch to FIRE, or the signal from the CES when the ascent engine is fired, applies 28 volts dc from EPS systems A and B to the set coils of latching relays K2. Contacts of K2 connect the ED stage-sequencing circuits (RC time-delay circuits) to the ED buses, passing current through closed contacts of relay K3. This energizes relays K5 and K5A (separation of nuts and bolts) and relays K6 (deadfacing). Relays K3 and K4 do not operate immediately, due to the time-delay circuitry. A time delay is necessary to ensure removal of all power from the interstage umbilical before it is cut. After approximately a 15- to 20-millisecond delay (during which the nuts and bolts separate), transistor Q2 applies ED bus voltage to energize K3. Contacts of K3 close and the bus voltage is applied to another time-delay circuit (transistors Q3 and Q4). This circuit has the same RC time constant; Q4 applies bus voltage to the coil of K4 (guillotine relay), completing stage separation. The

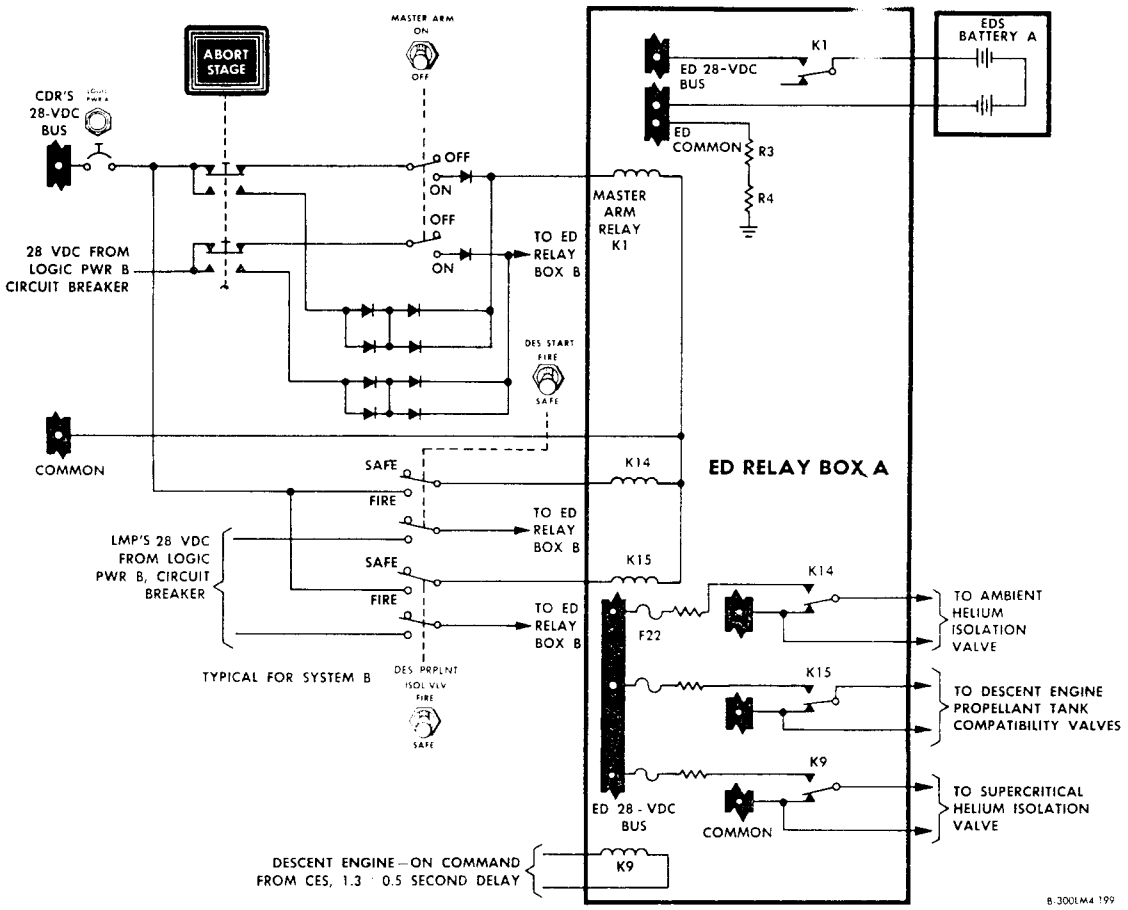

Figure 2.8-8. Descent Propellant Tank Prepressurization - Simplified Schematic Diagram

staging sequence can also be initiated by pressing the ABORT STAGE pushbutton. This arms the ED buses (bypassing the MASTER ARM switch) and initiates an automatic ascent engine fire sequence in the CES. The CES fire signal initiates the ED staging sequence. Contacts of K3 ensure that the deadface relay has removed electrical power from the umbilical before the guillotine detonators are fired.

2.8.3.6 Ascent Propellant Tank Pressurization. (See figure 2.8-10.)

Two helium isolation valves, each with two cartridges and two sets of parallel redundant fuel and oxidizer compatibility valves are used when pressurizing the ascent propellant tanks. One fuel compatibility valve and one oxidizer compatibility valve uses two cartridges; the other two compatibility valves, a single cartridge each. The ASC He SEL switch provides the astronauts with the option of using either one or both helium tanks to pressurize the system.

The valves are normally closed; they open when the cartridges are fired, depending on the setting of the ASC He SEL switch. In addition, the control relays for the helium isolation valves and the compatibility valves can be energized with a direct signal from the ABORT STAGE pushbutton, which bypasses the ASCENT He PRESS switch. The ASCENT He PRESS switch is a double-pole double-throw switch module, with a lever-locking toggle mechanism for the SAFE position. Normally, the ASC He SEL switch is set to BOTH so that both helium tanks are used for ascent propellant tank

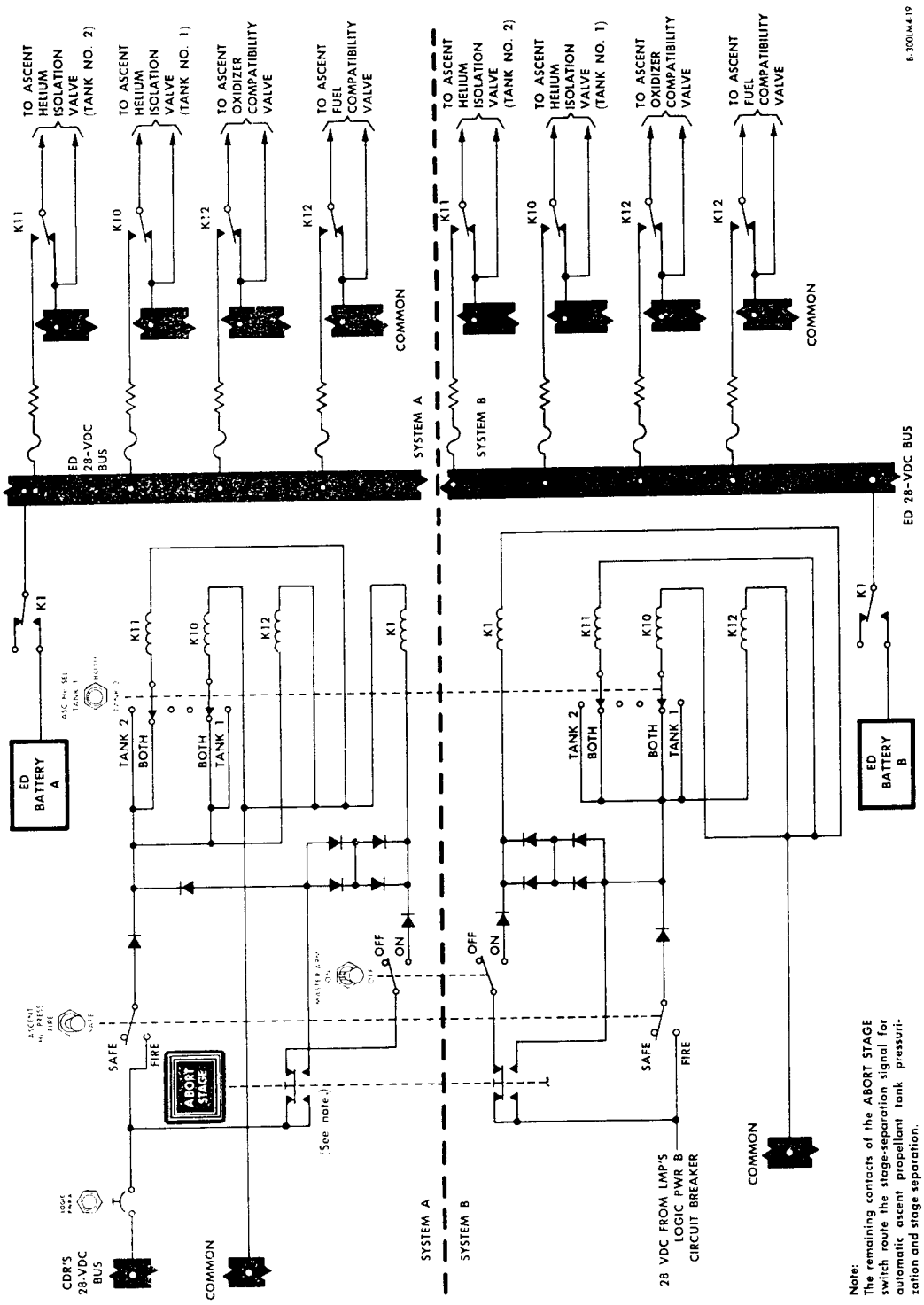

Figure 2.8-10. Ascent Propellant Tank Pressurization - Simplified Schematic Diagram

pressurization. Setting the MASTER ARM switch to ON, arms the ED buses. Momentarily holding the ASCENT He PRESS switch to FIRE, routes 28 volts dc from the EPS to the coils of control relays K12 and K12A of both ED systems. The contacts of K12A (ED system A), and K12, K12A (ED system B) route ED battery power to the fuel and oxidizer compatibility valves cartridges. Depending on the position of the ASC He SEL switch, the coils of relays K10 and/or K11 of both ED systems are also energized from the EPS, when the ASCENT He PRESS switch is activated. With the ASC He SEL switch in TANK 1 position, relay K10 of both ED systems are energized routing ED battery power to the helium tank No. 1 isolation valves. With the switch in the TANK 2 position, relays K11 of both ED systems are energized, routing ED battery power to the isolation valves of helium tank No. 2. In the BOTH position, relays K10 and K11 of both ED systems are energized, firing the valves in both tanks. The astronauts are alerted to ascent helium pressure malfunctions by the ASC PRESS warning light (panel 1). (Refer to table 2.9-3.)

2.8.3.7 RCS Propellant Tank Pressurization. (See figure 2.8-11.)

The RCS has two helium fuel, and oxidizer tanks. Each helium tank pressurizes one fuel tank and one oxidizer tank. Two parallel helium isolation valves are used in conjunction with each helium tank when pressurizing the RCS propellant tanks. Each valve has one cartridge, which is fired by one of the EDS systems.

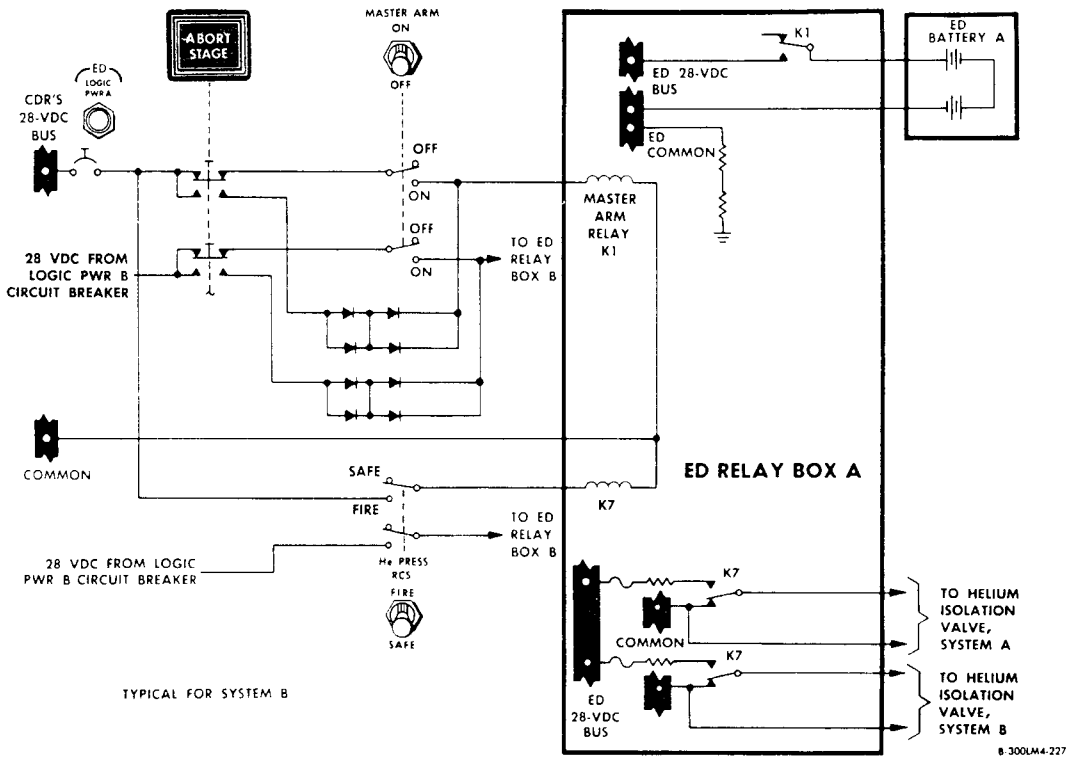

Figure 2.8-11. RCS Propellant Tank Pressurization

The valves are normally closed; their firing circuits are controlled by relays actuated by the RCS He PRESS switch. Setting the MASTER ARM switch to ON arms the ED buses. Momentarily holding the RCX He PRESS switch to FIRE routes 28 volts dc from EPS systems A and B to the coils of relays K7. Contacts of K7 complete the circuit between the cartridges in the helium isolation valves and the ED buses. The contacts of K7 in relay box A route ED bus voltage to helium isolation valves in RCS systems A and B. The other helium isolation valve in RCS systems A and B receives its ED bus voltage through contacts of K7 in relay box B. Opening either valve in system A and B permits helium to pressurize the RCS fuel and oxidizer tanks. The RCS A REG and RCS B REG warning lights and the RCS caution light alert the astronauts to malfunctions of RCS helium line pressure and tank pressure. (Refer to table 2.9-3.)

2.8.3.8 Descent Propellant Tank Venting.

The descent fuel and oxidizer helium pressurization venting systems each contain an ED-controlled valve in series with a normally open latching valve. The latching valves are normally open; actuating the ED valves vents the systems. Setting the MASTER ARM switch to ON arms the ED buses. Momentarily setting the DES VENT switch to FIRE routes EPS power to the coils of relay K13 in both ED systems. The contacts of K13 route ED power to the cartridges of the vent valves, opening them. The helium vents through the normally open fuel and oxidizer vent valves. Setting the FUEL VENT and OXID vent switches (panel 8) to CLOSE, closes the vent valves and causes the talkbacks to change from gray to barber-pole displays.

2.8.4 MAJOR COMPONENT/FUNCTIONAL DESCRIPTION.

2.8.4.1 Explosive Devices. (See figure 2.8-12.)

Two types of explosive cartridges are incorporated in the LM; detonator cartridges, containing high explosive changes, and pressure cartridges, containing relatively low yield propellant charges. Each cartridge contains a specially indexed single bridgewire apollo standard initiator (SBASI). All explosive devices and components, except the circuit interrupters, can be installed at the launch site late in the LM assembly and prelaunch activity. To prevent erroneous installation, cartridges with different outputs have different connector threads. Twisted, shielded pairs of firing lines provide protection against RF energy. All cartridge assemblies are hermetically sealed to protect the explosive materials against ground and mission environments.

The following explosive devices and components separately, or in various combinations, perform the EDS functions:

- Single Bridgewire Apollo Standard Initiators. The SBASI's are fired by ED battery power; they initiate all explosive cartridges and devices required during this mission.
- End Detonator Cartridges. The EDC's are used to detonate explosive charges in the interstage umbilical cutter assembly (cable cutter) and to actuate the landing uplock device.
- Pressure Cartridges.
  - Electrical circuit interrupter (ECI) cartridges
  - RCS valve cartridges
  - Propulsion valve cartridges
  - Nut cartridges
  - Bolt cartridges

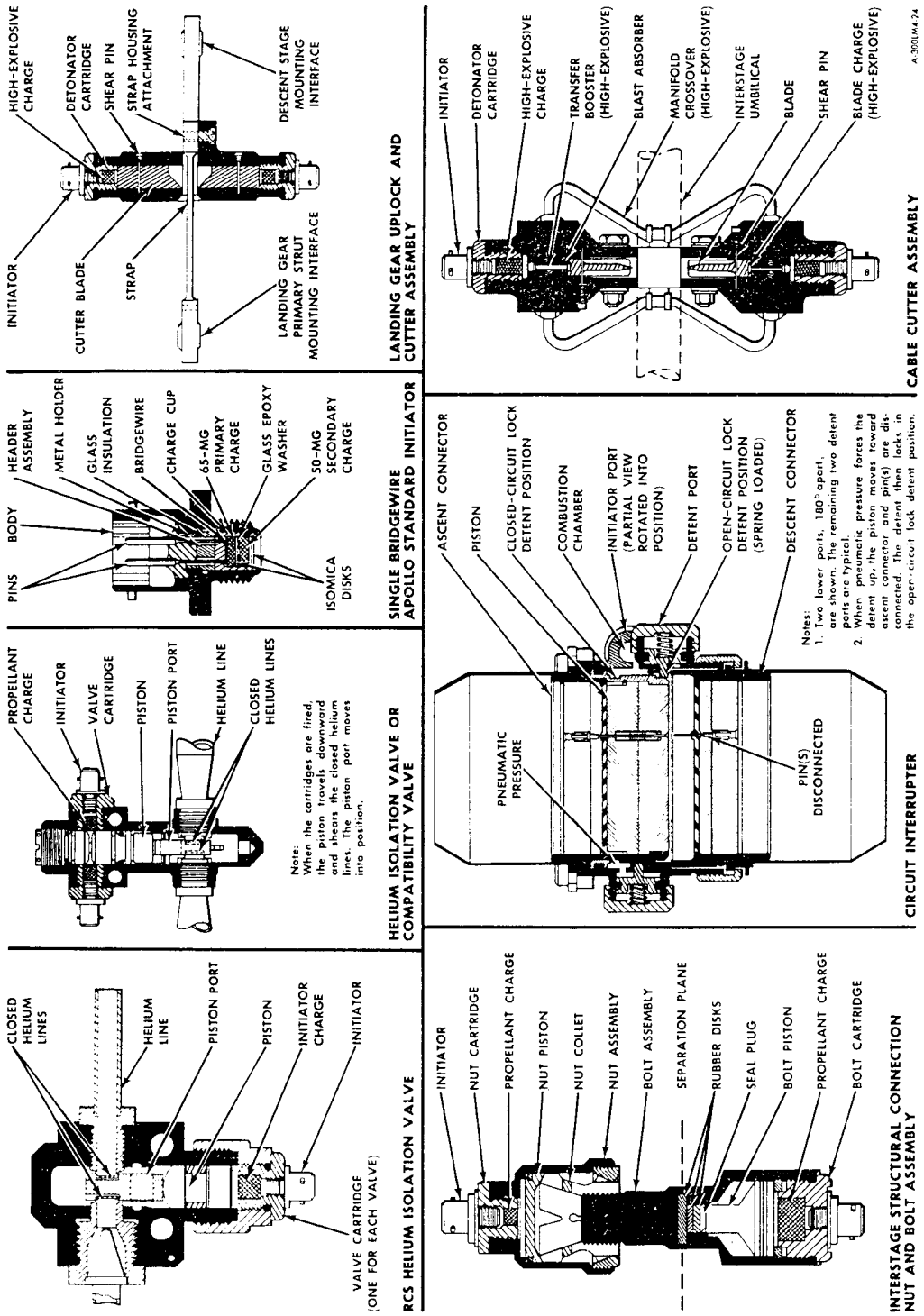

Figure 2.8-12. Explosive Devices

- Helium Isolation Valves and Compatibility Valves. These valves are similar and operate in the same manner; they are used singly or in pairs, depending on the function (RCS, ascent, or descent propellant tank pressurization). Each RCS explosive valve is actuated by a single cartridge. (Redundant valves are used.) Each ascent helium isolation valve and the descent helium and compatibility valves are actuated by two cartridges. One of the two ascent fuel compatibility valves and two ascent oxidizer compatibility valves, contains two cartridges; the other, a single cartridge.

- Circuit Interrupters. Circuit interrupters terminate all signal and power leads between the ascent and descent stages. These devices are actuated within 25 milliseconds after receipt of the stage command. They are actuated by either of two cartridges.

- Explosive Nuts and Bolts. The ascent and descent stage structures are joined by four explosive nuts and four explosive bolts, each with a single cartridge. The four structural tie points are released within 20 milliseconds after receipt of the stage command.

- Guillotine (cable cutter assembly). The guillotine consists of two explosively actuated blades, interconnected through common manifolds. Either blade can sever an umbilical 35% greater than the actual umbilical within 100 milliseconds after receipt of the stage command. Shielded mild detonating cord ensure that both blades operate even if one initiator fails to receive the fire signal.

- Landing Gear Uplock and Cutter Assemblies. Two independent EDC's are used in each of the four uplocks, to deploy the landing gear assemblies.

2.8.4.1.1 Cartridges.

The SBASI's (figure 2.8-12) in the EDS cartridges provide a high power-to-weight ratio, require low energy to initiate, are compact, and have a high degree of reliability. Most EDS functions use two cartridges; one is redundant. The ascent propulsion compatibility valves use single cartridges and dual cartridges. (Refer to paragraph 2.8.3.6.) When 3.5 amperes (minimum) is applied to the initiator bridgewire for a few milliseconds, heat is generated. The heat fires the initiator. Each initiator is controlled by separate, independent contacts of the firing relays. Power to fire the initiators is supplied by the ED batteries.

2.8.4.1.2 Interstage Structural Connections. (See figure 2.8-12.)

The LM uses four nuts and bolts as interstage structural connections. These nuts and bolts are separated explosively for stage separation. Each nut and bolt has its own cartridge; firing either cartridge separates the stages. The nut cartridges are fired by EDS system B; the bolt cartridges by EDS system A. When one or both cartridges are fired, gases that drive a piston within the nut and/or bolt assemblies are generated. This results in bolt fracture and nut separation. If the nut does not separate from the bolt, bolt fracture, alone, results in stage separation. Reaction time for complete nut and bolt separation is approximately 15 milliseconds. Power for the firing control circuit is controlled by the stage-sequencing circuitry (ED time-delay circuit) in the ascent and descent stages. This circuitry provides proper sequencing of the LM staging operations.

2.8.4.1.3 Interstage Umbilical Cutters (Guillotine). (See figure 2.8-12.)

The guillotine consists of two cutter assemblies that sever the interstage electrical umbilical during stage separation. Each cutter assembly consists of an EDC, a transfer booster, a blade charge, and a blade. The transfer booster is connected by two manifold crossovers (shielded mild detonating cord), one on each side of the guillotine housing. The manifold crossovers provide for sympathetic ignition needed to operate both blades if one EDC does not fire.

The cutter assembly blades are held safe with shear pins that ensure that the interstage umbilical will not be cut without a positive fire signal to the control circuit. Firing the detonator

and explosive blade charge generates a shock wave that drives the cutting blades through the interstage umbilical. The blades sever the umbilical, cutting all electrical wires, the descent water tank supply hardline, and the waste management hardline between the ascent and descent stages. Loss of the ascent water tank supply is prevented by check valves in the ascent stage plumbing. Reaction time for cutter assembly operation is approximately 5 milliseconds, after 3.5 amperes (minimum) of direct current is applied to the initiator bridgewire.

2.8.4.1.4 Landing Gear Uplock and Cutter Assemblies. (See figure 2.8-12.)

Each landing gear assembly has a landing gear uplock and cutter assembly, which contains two EDC's. Firing an EDC generates a shock wave that acts on the base end of the uplock cutting blade. The blades (driven from opposite directions) sever a strap that connects the landing gear strut with the LM descent stage, permitting the landing gear assembly to deploy. Either blade can sever a strap 35% greater in cross section than the strap used. The operation response time of the uplock is approximately 20 milliseconds, after 3.5 amperes (minimum) of direct current is applied to the EDC. In operation, the EDC's are stagger-fired.

2.8.4.1.5 Helium Isolation Valves and Compatibility Valves. (See figure 2.8-12.)

The helium isolation valves and compatibility valves operate in the same manner. They use either a single cartridge or two cartridges, depending on the function being performed. (Refer to paragraph 2.8.3.1.) Firing a cartridge in a valve generates gases in the valve explosion chamber at extremely high rates. The gases drive a piston to shear a closure disk in the pressure line. This opens the valves. At the end of its stroke, the piston is forced into the valve housing and the piston port in each valve is permanently aligned with the pressure line plumbing.

2.8.4.1.6 Circuit Interrupters (Deadface Connectors). (See figure 2.8-12.)

Two circuit interrupters are in the ascent stage. (See figure 2.8-1.) They are in front of the ascent stage tank thermal shielding, immediately above quadrant 4 of the descent stage. Each circuit interrupter has two cartridges. Each cartridge can operate the circuit interrupter. Using two cartridges for each circuit interrupter provides redundancy to ensure that the electrical power between the ascent and descent stages is terminated before umbilical severance.

The circuit interrupter cartridges are energized during the staging operation. When energized, the cartridges cause a pressure buildup in the circuit interrupter combustion chamber. As pressure builds up in the chamber, two initial lock detents move to their open positions, freeing the piston assembly and permitting its movement when its actuation pressure is reached. When the pressure in the combustion chamber is sufficient to overcome pin and O-ring friction, the piston assembly moves to the open-circuit position, disconnecting the pins of the electrical connectors. Spring-loaded final lock detent pins automatically drop into slots in the piston and retain the piston in the open-circuit position. Circuit interruption removes all electrical power from the interstage umbilical lines before the umbilical is severed. (See figure 2.8-13 for a functional block diagram of circuit interruption.)

The stage-sequencing circuits (paragraph 2.8.3.5) control circuit-interrupter operation. If one cartridge fired by the control circuit malfunctions, the other cartridge, fired by the redundant control circuit performs the function; normally, both cartridges fire. Approximately 240 electrical conductors are routed through each circuit interrupter. The interrupter pin connections are normally closed; they are opened by firing the cartridge. Operation response time of the circuit interrupters is approximately 20 milliseconds.

2.8.4.2 ED Batteries.

Two 20-cell silver oxide-zinc batteries provide power to both EDS systems to fire the initiators. One battery is in the ascent stage; the other one, in the descent stage. (See figure 2.8-1.) Normal operation of either battery provides adequate electrical power for EDS operation. Each battery is rated at 37.1 volts dc (open-circuit voltage), 0.75 ampere-hour; it can produce 75 amperes for 36 seconds. The output voltage of each battery can be monitored periodically on panel 14. Setting the POWER/TEMP MON selector switch to ED/OFF, and the ED VOLTS switch to BAT A, provides an indication of the output voltage of ED battery A on the VOLTS indicator. Setting the ED VOLTS

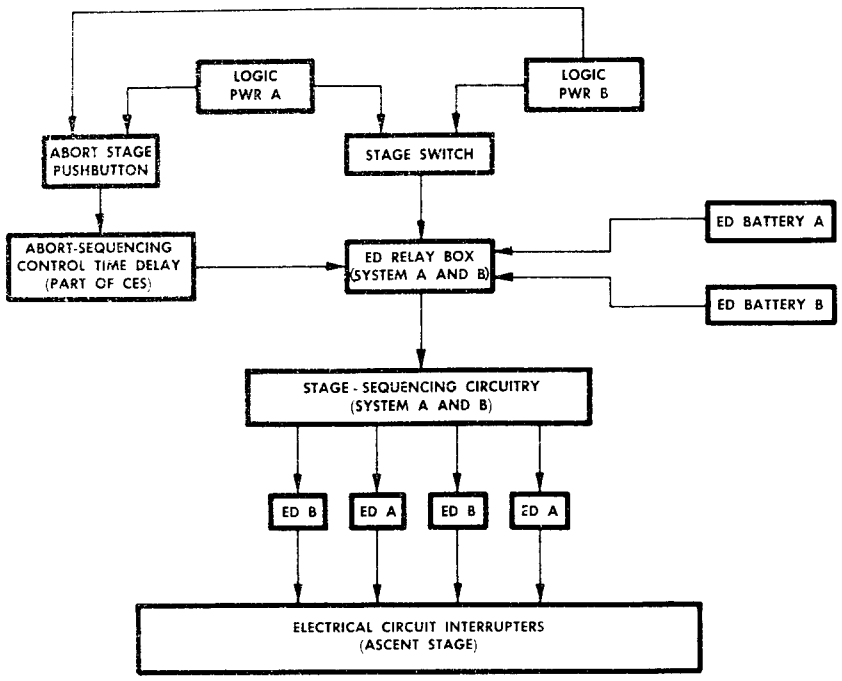

Figure 2.8-13. Electrical Circuit Interrupter - Functional Block Diagram

switch to BAT B provides an indication of the output voltage of ED battery B. The battery electrolyte is potassium hydroxide one-half saturated. The battery case is constructed of plastic. Excess pressure in the batteries is vented into the descent and ascent stages at 30±5 psig.

2.8.4.3 Explosive Devices Relay Boxes.

One ED relay box is in the ascent stage; another one, in the descent stage. (See figure 2.8-1.) Latching and nonlatching relays are used in the EDS. The latching relays, used to control the bus-arming and staging sequence, consist of two coils (set and reset) with associated contacts. The set coil, when energized, initiates circuit operation; the reset coil, when energized, stops circuit operation. The contacts are latched set or reset, depending on the coil pulsed. The nonlatching relays, used in control and fire circuits, consist of one coil with associated nonlatching contacts. These contacts maintain their normally open or closed position and do not change state until the coil is energized. The contacts remain in the changed state only while the coil is energized.

Fuse-resistors in the ED relay boxes limit the current applied to the initiator bridgewire and provide overcurrent protection for the ED batteries. Each firing circuit uses one fuse-resistor in series with the initiator bridgewire. Each relay box also contains an RC time-delay circuit that is used during the staging sequence. Refer to paragraph 2.8.3.5.

2.8.5 PERFORMANCE AND DESIGN DATA.

The performance and design data for the EDS are given in table 2.8-1.

Table 2.8-1. Explosive Devices Subystem - Performance and Design Data

Battery	
Height	3.03 inches
Width	2.75 inches
Length	6.78 inches
Weight (each, filled)	3.50 pounds
Electrical requirements	
Inputs	
From EPS (Commander's and LM Pilot's buses)	28 volts dc
From AELD of control electronics section	28 volts dc
From ED batteries (systems A and B)	37.1 volts dc (open-circuit voltage)
	35.0 volts dc (minimum)
From DECA	28 volts dc
Outputs	
To initiators (in cartridge assemblies)	3.5 amperes for 10 milliseconds (minimum)
ED relay boxes	7.5 to 15.0 amperes dc (for at least 10 milliseconds)
Resistance	
Initiators	1.05 ±0.10 ohms
Electrical circuit interrupter	Approximately 0.2 ohm with 30-millivolt open-circuit voltage and maximum 10-microampere short-circuit current
Fuse-resistors	1.0 ohm with 20.0 amperes (for 100 milliseconds)

2.8.6 OPERATIONAL LIMITATIONS AND RESTRICTIONS.

The operational limitations and restrictions for the EDS are as follows:

- The landing gear legs must be deployed before the descent engine is fired. In the stowed position, the legs are in the path of the descent engine plume; descent engine firing would damage them.
- The ASCENT He PRESS switch should not be actuated longer than 24 hours before termination of ascent engine operation. The ascent pressurization valves are designed to operate for only 24 hours after exposure to propellant vapors. Exceeding this limit may cause ascent valve failure.
- The DES START He PRESS and DES PRPLNT ISOL VLV switches should not be actuated longer than 3.5 days before termination of descent engine operation. The descent pressurization valves are designed to operate for only 3.5 days after exposure to propellant vapors. Exceeding this limit may cause descent valve failure.

2.9 INSTRUMENTATION SUBSYSTEM.

2.9.1 INTRODUCTION.

The Instrumentation Subsystem (IS) monitors the LM subsystems, performs in-flight checkout, prepares LM status data for transmission to MSFN, provides timing frequencies and correlated data for LM subsystems, stores voice and time-correlation data, and performs lunar surface checkout.

The IS consists of subsystem sensors, a signal-conditioning electronics assembly (SCEA), pulse-code-modulation and timing electronics assembly (PCMTEA), caution and warning electronics assembly (CWEA), and a data storage electronics assembly (DSEA). The SCEA receives most of the LM subsystem status signals from sensors located in the subsystems. The signals are conditioned, then routed to the CWEA for monitoring, to displays, and to the PCMTEA for telemetry.

Each IS assembly receives operating power from the Electrical Power Subsystem (EPS) through associated circuit breakers. (See figure 2.9-1.) The subsystem sensors receive their operating power through the INST: SIG SENSOR circuit breaker (panel 16). The electronic replaceable assemblies (ERA's) in the SCEA receive their operating power through the INST: SIG CONDR 1 and SIG CONDR 2 circuit breakers (panel 11 and 16, respectively). The CWEA power supply receives its operating power through the INST: CWEA circuit breaker (panel 16). If the CWEA power supply fails, a failure-detection circuits lights the C/W PWR caution light (panel 2). When failures are detected, the MASTER ALARM pushbutton/lights (panels 1 and 2) go on. These lights receive their operating power through the LTG: MASTER ALARM circuit breaker (panel 16). The PCMTEA dc-to-dc converter receives its operating power through the INST: PCM/TE circuit breaker (panel 16). The dc-to-dc converter supplies voltages to operate the PCM analog and digital blocks, which prepare subsystem data for telemetering. The converter also supplies the timing electronics (TE) section of the PCMTEA. The TE section routes LM subsystem synchronization signals. The DSEA power supply receives its operating power through the AC BUS A: TAPE RCDR circuit breaker (panel 11) and routes voltages to operate DSEA circuits.

2.9.2 SUBSYSTEM INTERFACES. (See figure 2.9-1.)

The IS draws operating power from the EPS. Data from sensors in all LM subsystems are routed to ERA's in the SCEA for voltage level conditioning acceptable to the PCMTEA. The PCMTEA routes the data from the SCEA to the Communications Subsystem (CS) in nonreturn-to-zero (NRZ) form (51.2 or 1.6 kilobits per second) or split-phase form (1.6 kilobits per second) for transmission to MSFN. The PCMTEA also supplies the CS with a 512-kpps sync signal and a 512-kpps reference signal. The CS uses the reference signal to generate a 1,024-kc subcarrier, which is phase referenced to the PCMTEA NRZ input and modulated by the NRZ input for transmission to MSFN. The CS uses the sync signal to generate a 1.25-mc subcarrier, obtained by doubling the output from mixing the 512-kc sync signal with a 113-kc voltage control oscillator output. This subcarrier is modulated by voice and biomedical data for S-band transmission. The split-phase data modulates a VHF B carrier. Besides these outputs to the CS (in serial digital form), the PCMTEA routes serial digital data received from the LM guidance computer (LGC) and abort guidance section (AGS) of the Guidance, Navigation, and Control Subsystem (GN&CS) and supplies the LGC and AGS with synchronizing pulses necessary for LM operations.

The DSEA records voice and provides an interface with the CS and the TE section of the PCMTEA. A voice-operated relay (VOX) keying signal, supplied by the CS, is routed to the DSEA through the intercommunication bus to turn on the DSEA. The TE section continuously supplies synchronizing signals to LM subsystems and crew displays once the TE's quartz crystal oscillator is pulsed with a 1,024-kpps signal from the LGC.

The SCEA outputs are also routed to the CWEA and to crew displays. The CWEA provides the function needed to trip the warning or caution lights (panels 1 and 2, respectively) and the two MASTER ALARM pushbutton/lights and to enable a 3-kc tone generator in S&C control assembly No. 2 of the GN&CS when a subsystem malfunctions. The tone is heard in the astronaut headsets. The CWEA failure-detection circuits also provide the voltage needed to trip appropriate component caution lights.

2.9.3 FUNCTIONAL DESCRIPTION. (See figure 2.9-2.)

The IS accepts data, such as temperature, frequency, valve position, pressure, switch position, voltage, and current, from other subsystems through subsystem sensors. The sensors convert physical data to analog and digital (discrete event functions) signals that are routed to the SCEA for voltage level conditioning. If conditioning is not required, the signals are routed directly to the PCMTEA and CWEA. The SCEA conditions the sensor outputs and feeds signals of high-level analog (0 to 5 volts dc) or digital (4 to 6 volts dc for logic 1; 0 to 0.5 volt dc for logic 0) data to the PCMTEA, CWEA, and displays. To activate the IS, the circuit breakers for each IS assembly must be closed. To enable the MASTER ALARM pushbutton/lights, component caution lights, and the caution and warning lights, which operate in conjunction with the IS, the LTG: MASTER ALARM circuit breaker (panel 16) and the LTG: ANUN/DOCK/COMPNT circuit breakers (panels 11 and 16) must be closed.

The conditioned signals supplied by the SCEA to the PCMTEA and the signals routed directly from the sensors to the PCMTEA are changed to serial digital form for transmission to MSFN at one of two bit rates: 1,600 bits per second (low rate) or 51,200 bits per second (high rate). Subcarrier frequencies, time reference signals, and sync pulses are generated in the PCMTEA and supplied to other subsystems that require them for proper operation.

The PCMTEA receives a 1,024-kpps synchronizing signal and three types of data: high level analog, parallel digital, and serial digital. Some parallel digital and high-level analog inputs are supplied directly to the PCMTEA from the sensors; others are routed through the SCEA. The SCEA conditions the inputs to voltage levels required by the PCM equipment. The 1024-kpps sync signal from the LGC provides synchronization for the PCMTEA and those subsystems that use outputs from the TE equipment of the PCMTEA.

Primary control of all units in the PCM equipment is established by the programmer. Using submultiples of the internal or external 1,024-kpps signals, the programmer provides the basic timing for data sampling and processing. It generates signals for bit, word, prime frame, and subframe timing intervals. (See figures 2.9-3 and 2.9-4.) External format select signals cause the programmer to generate commands for a fixed, predetermined program of analog and digital data sampling and to sequentially control the sampling operation. The programmer generates synchronization and format identification word patterns and inserts this information into the output serial data stream. It also generates the command and timing signals for synchronizing other LM equipment with the PCMTEA.

The analog multiplexer drivers receive the timing and command signals from the programmer and route the signals to appropriate circuits in the high-level analog multiplexer gates. The analog voltage inputs to these gates are selected at the programmed sampling rate and applied to the high-speed gates. The high-level pulse-amplitude-modulated (PAM) outputs from the high-speed gates are routed to the analog-to-digital converter (coder). The coder produces digitized words that represent the input analog data and supplies the words to the digital multiplexer.

The digital multiplexer gates receive digitized-data signals from the coder and pure digital information from other LM equipment. Gating command signals from the programmer control sequential operation of the digital multiplexer gates according to a fixed program, producing multiplexed data that consist of parallel binary words. The parallel binary words are gated to the output register and data transfer buffers (output buffers). The output register converts the parallel data to a serial RZ and NRZ-C output. It also receives, from the LGC and the AGS, serial digital data, which are inserted into the serial output of the PCMTEA.

The PCMTEA supplies timing commands and synchronization signals. These signals are provided, by the TE and the programmer, to the data transfer buffers located in the TE and PCM sections. These buffers supply the signals to other LM equipment. The TE consists of a phase-locked oscillator and doublers, a decision network, a timing generator, time accumulator, serial time code generator, and three oscillator failure-detection circuits. The TE is redundant in critical areas. A 1,024-kpps input from the LGC forces the phase-locked oscillator in synchronism. If the input from the LGC fails, the phase-locked oscillator continues to furnish the necessary timing signals without loss of data. The TE divides the 1024-kpps signal into a number of selected subharmonic frequencies, which are routed to the PCM equipment and other LM devices.

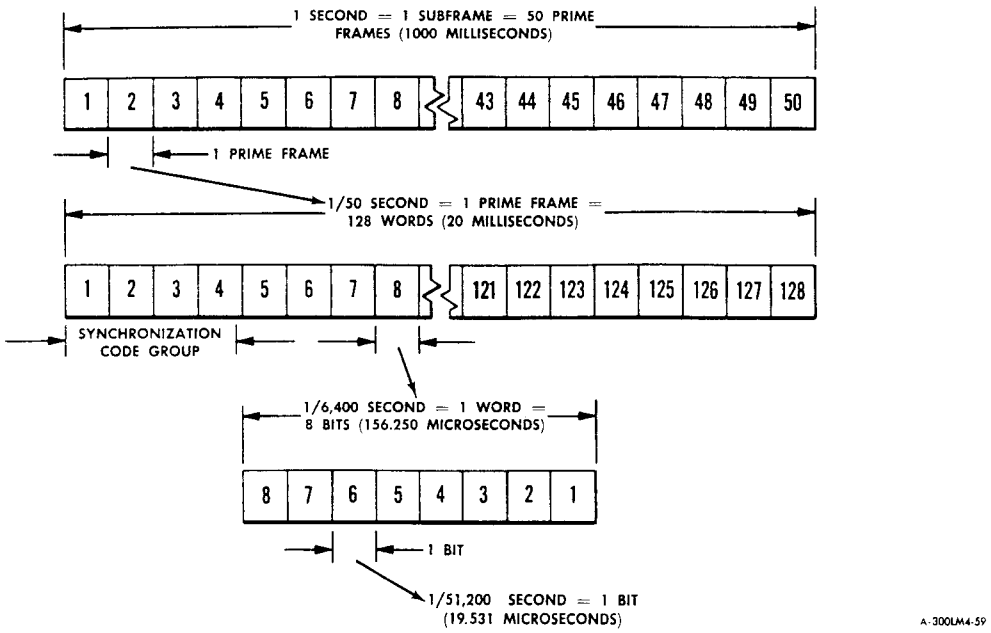

Figure 2.9-3. Data Format No. 1 (Normal Mode)

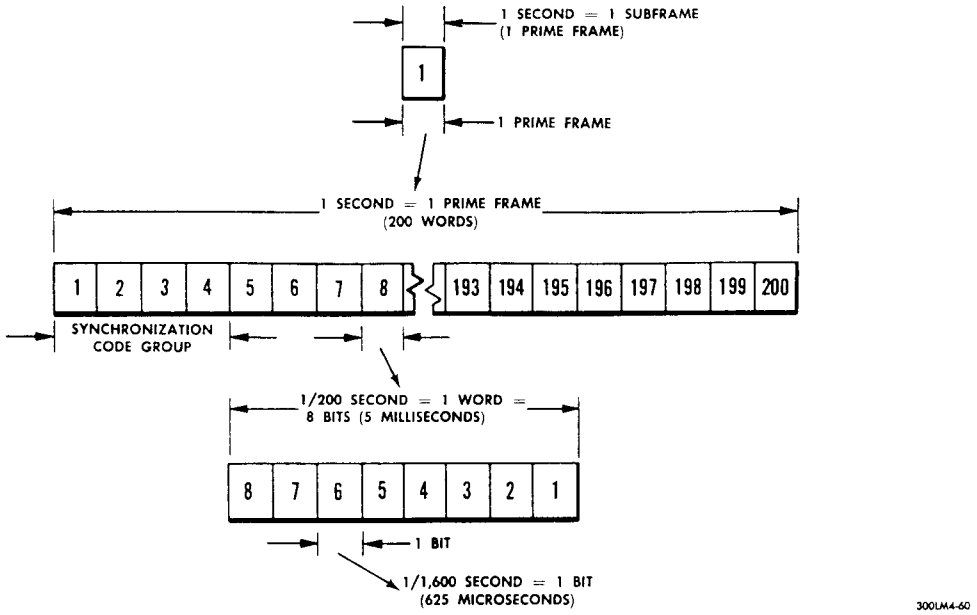

Figure 2.9-4. Data Format No. 2 (Reduced Mode)

Analog and digital signals supplied from the SCEA to the CWEA are constantly compared with internally generated limits and monitored on display panels. On detecting a malfunction (out-of-limit condition), the CWEA provides output signals to energize the associated warning or caution light, both MASTER ALARM pushbutton/lights, and a tone generator. The warning lights indicate malfunctions that jeopardize astronaut safety and require immediate action. The caution lights indicate malfunctions that do not require immediate action.

The DSEA provides voice-recording capability. The audio signal is supplied from the astronaut's bus in the CS to the DSEA, where it is recorded along with time reference signals (mission elapsed time) from the PCMTEA. Ten hours of recording time is provided in the DSEA. The tape cannot be played back by the DSEA; this must be performed with ground equipment.

2.9.4 MAJOR COMPONENT/FUNCTIONAL DESCRIPTION.

The IS consists of the following:

- Sensors - sense physical data in other subsystems (temperature, valve and switch positions, pressure, voltage, current, water and propellant quantity).
- Signal-conditioning electronics assembly - conditions subsystem transducer (sensor) signals and events to proper voltage levels.
- Pulse-code-modulation and timing electronics assembly - prepares subsystem-status signals for transmission and provides timing frequencies and mission-elapsed-time data to subsystems.
- Caution and warning electronics assembly - monitors operational levels and generates signals that cause appropriate caution and warning lights and component caution lights to go on and activate the two MASTER ALARM pushbutton/lights and a tone generator.
- Data storage electronics assembly - stores audio and time-correlation data (mission elapsed time) on tape.

2.9.4.1 Sensing Equipment.

The IS sensors continuously check the status of other subsystems by sensing temperature, valve and switch positions, pressure, voltage, current, and water and propellant quantity. These sensed data are changed to electrical signals (digital or analog) compatible with the requirements of the SCEA or PCMTEA.

2.9.4.2 Signal-Conditioning Electronics Assembly.

The SCEA converts all unconditioned subsystem transducer (sensor) signals and events to proper voltage levels required by the PCMTEA, CWEA, and displays. The unconditioned signals are fed through amplifiers, attenuators, ac-to-dc converters, analog and discrete isolating buffers, frequency-to-dc converters, resistance-to-dc converters, and phase-sensitive demodulators to provide the proper output voltages. These seven basic SCEA subassemblies are in each electronic replaceable assembly (ERA-1 and ERA-2) that makes up the SCEA. Each ERA has capacity for 22 plug-in subassemblies (conditioning units) and provides the interface connections between other LM subsystems and the IS. (Refer to tables 2.9-1 and 2.9-2 for conditioned and preconditioned interfacing signals.) These subassemblies provide conditioned digital and analog data. Digital data (discrete event functions) outputs appear as a 4- to 6-volt d-c level for logic 1 or "on"; as a 0- to 0.5-volt d-c level, for logic 0 or "off." Discrete signals to be monitored by displays are in the form of solid-state switch closures. Analog data varies from 0 to 5 volts dc. Each ERA contains circuits that route signals to IS assemblies. In tables 2.9-1 and 2.9-2, the number in parentheses, following the conditioning unit number, designates the unit location in ERA-1 or ERA-2. The displays in parentheses are located on the corresponding subsystem panel, except where otherwise noted. See figure 2.9-15 for signals routed to the CWEA failure-detection circuits.

Table 2.9-1. ERA-1 - Conditioned and Preconditioned Interfacing Signals

From (Subsystem)	Signal Nomenclature and Telemetry Code No.	To (Conditioning Unit)	Output	To (IS Assembly and Display)
ECS		504-1 (5)		
	Suit outlet pressure - GF1301	Circuit No. 1	0 to 5 vdc (0 to 10 psia)	PCMTEA
				Display (SUIT PRESS indicator)
		Preconditioned	1.56 to 5.0 vdc (3.2 to 10 psia)	CWEA (SUIT/FAN warning light)
	CO_2 Partial pressure - GF1521	Circuit No. 2	0 to 5 vdc (0 to 30 mm Hg)	PCMTEA
		Preconditioned	2.27 to 5.0 vdc	CWEA (ECS caution light) Display (CO_2 component caution light)
	Water separator No. 1 and 2 - GF9999	Circuit No. 3	0 to 5 vdc (500 to 3,600 rpm)	PCMTEA
		Preconditioned	More than 1530 rpm	CWEA (ECS caution light) Display (H_2O SEP component caution light)
		504-1 (7)		
	Ascent oxygen tank No. 1 pressure - GF3582	Circuit No. 1	0 to 5 vdc (0 to 1,000 psia)	PCMTEA
		Preconditioned	95 to 684 psia	CWEA (O_2 QTY caution light)
		Circuit No. 1	0 to 854 psia	Display (O_2 QUANTITY indicator)
	Ascent oxygen tank No. 2 pressure - GF3583	Circuit No. 2	0 to 5 vdc (0 to 1,000 psia)	PCMTEA
		Preconditioned	95 to 684 psia	CWEA (O_2 QTY caution light)
		Circuit No. 2	0 to 854 psia	Display (O_2 QUANTITY indicator)

Table 2.9-1. ERA-1 - Conditioned and Preconditioned Interfacing Signals (cont)

From (Subsystem)	Signal Nomenclature and Telemetry Code No.	To (Conditioning Unit)	Output	To (IS Assembly and Display)
ECS (cont)		504-1 (7) (cont)		
	Descent tank water quantity - GF4500	Circuit No. 3	0 to 5 vdc (0% to 100%)	PCMTEA
	*	Circuit No. 3	0% to 100%	Display (H_2O QUANTITY indicator)
		504-1 (8)		
	Ascent tank No. 1 water quantity - GF4582 (LM 8)	Circuit No. 1	0 to 5 vdc (0% to 100%)	PCMTEA
	Ascent tank No. 1 water quantity - GF4501 (LM 9 and subq)			
	*	Circuit No. 1	0% to 100%	Display (H_2O QUANTITY indicator)
	Ascent tank No. 2 water quantity - GF4583 (LM 8)	Circuit No. 2	0 to 5 vdc (0% to 100%)	PCMTEA
	Ascent tank No. 2 water quantity - GF4502 (LM 9 and subq)			
	*	Circuit No. 2	0% to 100%	Display (H_2O QUANTITY indicator)
		506-3 (10)		
	Water sublimator coolant outlet temperature - GF9998	Circuit No. 1	0 to 5 vdc (+20 to +120 F) More than +50 F 0 to +80 F	PCMTEA CWEA (GLYCOL caution light) Display (GLYCOL temperature indicator)
RCS		504-1 (6)		
	Helium pressure, tank A - GR1101	Circuit No. 1	0 to 5 vdc (0 to 3,500 psia)	PCMTEA
		Preconditioned	More than 1,700 psia	CWEA (RCS caution light)
		Circuit No. 1	0 to 3,500 psia	Display (A PRESS indicator)
	Helium pressure, tank B - GR1102	Circuit No. 2	0 to 5 vdc (0 to 3,500 psia)	PCMTEA

*A nomograph is required for quantity determination. The H_2O QUANTITY meter reading is indicative of pressure change only.

Table 2.9-1. ERA-1 - Conditioned and Preconditioned Interfacing Signals (cont)

From (Subsystem)	Signal Nomenclature and Telemetry Code No.	To (Conditioning Unit)	Output	To (IS Assembly and Display)
RCS (cont)		504-1 (6) (cont)		
		Preconditioned	More than 1,700 psia	CWEA (RCS caution light)
		Circuit No. 2	0 to 3,500 psia	Display (B PRESS indicator)
	Helium regulator pressure system A - GR1201	Circuit No. 3	0 to 5 vdc (0 to 350 psia)	PCMTEA
		Preconditioned	165 to 219 psia	CWEA (RCS A REG warning light)
		Circuit No. 3	0 to 350 psia	Display (A PRESS indicator)
	Helium regulator pressure system B- GR1202	Circuit No. 4	0 to 5 vdc (0 to 350 psia)	PCMTEA
		Preconditioned	165 to 219 psia	CWEA (RCS B REG warning light)
		Circuit No. 4	0 to 350 psia	Display (B PRESS indicator)
		504-4 (12)		
	Main shutoff valves closed, system A - GR9609	Circuit No. 1	4 to 6 vdc (on) 0 to 0.5 vdc (off)	CWEA (RCS A REG warning light inhibit signal) (For PCM and display, refer to circuit No. 8.)
	Main shutoff valves closed, system B - GR9610	Circuit No. 2	4 to 6 vdc (on) 0 to 0.5 vdc (off)	CWEA (RCS B REG warning light inhibit signal) (For PCM and display, refer to circuit No. 10.)
	System A oxidizer interconnect valves open - GR9641	Circuit No. 3	4 to 6 vdc (on) 0 to 0.5 vdc (off) 0 to 0.5 vdc (on) 28 vdc (off)	PCMTEA Display (ASC OXID talkback)
	System B oxidizer interconnect valves - GR9642	Circuit No. 4	4 to 6 vdc (on) 0 to 0.5 vdc (off) 0 to 0.5 vdc (on) 28 vdc (off)	PCMTEA Display (ASC FUEL talkback)
	Spare - Z6018	Circuit No. 5	4 to 6 vdc (on) 0 to 0.5 vdc (off) 0 to 0.5 vdc (on) 28 vdc (off)	CWEA Display

Table 2.9-1. ERA-1 - Conditioned and Preconditioned Interfacing Signals (cont)

From (Subsystem)	Signal Nomenclature and Telemetry Code No.	To (Conditioning Unit)	Output	To (IS Assembly and Display)
RCS (cont)		504-4 (13)		
	Thrust chamber assembly solenoid valve A4 closed - GR9661	Circuit No. 1	4 to 6 vdc (on) 0 to 0.5 vdc (off) 0 to 0.5 vdc (on) 28 vdc (off)	PCMTEA (For CWEA, refer to 504-5, location 14.) Display (SYSTEM A QUAD 4 talkback)
	Thrust chamber assembly solenoid valve B4 closed - GR9662	Circuit No. 2	4 to 6 vdc (on) 0 to 0.5 vdc (off) 0 to 0.5 vdc (on) 28 vdc (off)	PCMTEA (For CWEA, refer to 504-5, location 14.) Display (SYSTEM B QUAD 4 talkback)
	Thrust chamber assembly solenoid valve A3 closed - GR9663	Circuit No. 3	4 to 6 vdc (on) 0 to 0.5 vdc (off) 0 to 0.5 vdc (on) 28 vdc (off)	PCMTEA (For CWEA, refer to 504-5, location 14.) Display (SYSTEM A QUAD 3 talkback)
	Thrust chamber assembly solenoid valve B3 closed - GR9664	Circuit No. 4	4 to 6 vdc (on) 0 to 0.5 vdc (off) 0 to 0.5 vdc (on) 28 vdc (off)	PCMTEA (For CWEA, refer to 504-5, location 14.) Display (SYSTEM B QUAD 3 talkback)
	Thrust chamber assembly solenoid valve A2 closed - GR9665	Circuit No. 5	4 to 6 vdc (on) 0 to 0.5 vdc (off) 0 to 0.5 vdc (on) 28 vdc (off)	PCMTEA (For CWEA, refer to 504-5, location 14.) Display (SYSTEM A QUAD 2 talkback)
	Thrust chamber assembly solenoid valve B2 closed - GR9666	Circuit No. 6	4 to 6 vdc (on) 0 to 0.5 vdc (off) 0 to 0.5 vdc (on) 28 vdc (off)	PCMTEA (For CWEA, refer to 504-5, location 14.) Display (SYSTEM B QUAD 2 talkback)
	Thrust chamber assembly solenoid valve A1 closed - GR9667	Circuit No. 7	4 to 6 vdc (on) 0 to 0.5 vdc (off)	PCMTEA (For CWEA, refer to 504-5, location 14.) Display (SYSTEM A QUAD 1 talkback)
	Thrust chamber assembly solenoid valve B1 closed - GR9668	Circuit No. 8	4 to 6 vdc (on) 0 to 0.5 vdc (off) 0 to 0.5 vdc (on) 28 vdc (off)	PCMTEA (For CWEA, refer to 504-5, location 14.) Display (SYSTEM B QUAD 1 talkback)
	RCS/ASC interconnect A not closed - GR9631	Circuit No. 10	4 to 6 vdc (on) 0 to 0.5 vdc (off) 0 to 0.5 vdc (on) 28 vdc (off)	PCMTEA Display (SYSTEM A ASC FUEL talkback)
	RCS/ASC interconnect B not closed - GR9632	Circuit No. 11	4 to 6 vdc (on) 0 to 0.5 vdc (off) 0 to 0.5 vdc (on) 28 vdc (off)	PCMTEA Display (SYSTEM B ASC FUEL talkback)

Table 2.9-1. ERA-1 - Conditioned and Preconditioned Interfacing Signals (cont)

From (Subsystem)	Signal Nomenclature and Telemetry Code No.	To (Conditioning Unit)	Output	To (IS Assembly and Display)
RCS (cont)		504-4 (13) (cont)		
	Manifold crossfeed valves not closed - GR9613	Circuit No. 12	4 to 6 vdc (on) 0 to 0.5 vdc (off) 0 to 0.5 vdc (on) 28 vdc (off)	PCMTEA Display (CRSFD talkback)
	Thrust chamber assembly solenoid valves A4, B4, A3, B3, A2, B2, A1 and B1 closed - GR9661 through GR9668	504-5 (14) Circuits No. 1 through 8 respectively	4 to 6 vdc (on) 0 to 0.5 vdc (off)	CWEA (RCS TCA warning light inhibit signals)
		506-4 (20)		
	Quad cluster No. 3 - GR6002	Circuit No. 1	0 to 5 vdc (-60° to -260° F)	PCMTEA
			-60° to +260° F	Display (TEMP indicator, panel 3)
	Quad cluster No. 2 - GR6003	Circuit No. 2	0 to 5 vdc (-60° to +260° F)	PCMTEA
			-60° to +260° F	Display (TEMP indicator, panel 3)
	Quad cluster No. 1 - GR6004	Circuit No. 3	0 to 5 vdc (-60° to +260° F)	PCMTEA
			-60° to +260° F	Display (TEMP indicator, panel 3)
	Quad cluster No. 4 - GR6001	Circuit No. 4	0 to 5 vdc (-60° to +260° F)	PCMTEA
			-60° to 260° F	Display (TEMP indicator, panel 3)
		506-3 (21)		
	Suit inlet temperature - GF1281	Circuit No. 1	0 to 5 vdc (+20° to +120° F) +40° to +100° F	PCMTEA and display (SUIT TEMP indicator)

Table 2.9-1. ERA-1 - Conditioned and Preconditioned Interfacing Signals (cont)

From (Subsystem)	Signal Nomenclature and Telemetry Code No.	To (Conditioning Unit)	Output	To (IS Assembly and Display)
RCS (cont)		506-3 (21) (cont)		
	Cabin temperature - GF1651	Circuit No. 2	0 to 5 vdc (+20° to +120° F) +40° to +100° F	PCMTEA and display (CABIN TEMP indicator)
EPS	Commander's bus voltage - GC0301	502-2 (15)		
		Circuit No. 3	26.5 to 40 vdc	CWEA (DC BUS warning light)
		504-1 (18)		
	Commander's bus voltage - GC0301	Circuit No. 3	0 to 5 vdc (0 to 40 vdc)	PCMTEA and display (VOLTS indicator)
		503-2 (17)		
	Inverter bus voltage - GC0071	Circuit No. 1	4.48 to 5.0 vdc (112 to 125 vrms)	CWEA (INVERTER caution light) (For PCMTEA and display, refer to 504-1 (18) circuit No. 2.)
		504-1 (7)		
	Selected ED battery voltage - GY0703U	Circuit No. 4	0 to 5 vdc	EPS display (VOLTS indicator)
		Proconditioned	0 to 5 vdc	
		504-1 (18)		
	Inverter bus frequency - GC0155	Circuit No. 1	0 to 5 vdc (380 to 420 cps)	PCMTEA (For CWEA, refer to 505-1 (16) circuit No. 1.)
	Inverter bus voltage - GC0071	Circuit No. 2	0 to 5 vdc (105 to 125 vrms)	PCMTEA, display (VOLTS indicator) (For CWEA, refer to 503-2 (17) circuit No.1.)
	Main water regulator ΔP - GF4101	Circuit No. 4	0 to 5 vdc (0 to 2 psia)	PCMTEA
		505-1 (16)		
	Frequency inverter bus - GC0155	Circuit No. 1	2.25 to 2.75 vdc (398 to 402 cps)	CWEA (INVERTER caution light) (For PCMTEA, refer to 504-1 (18) circuit No.1.)

Table 2.9-1. ERA-1 - Conditioned and Preconditioned Interfacing Signals (cont)

From (Subsystem)	Signal Nomenclature and Telemetry Code No.	To (Conditioning Unit)	Output	To (IS Assembly and Display)
MPS		504-1 (8)		
(ascent propulsion section)	Regulator outlet manifold pressure - GP0025	Circuit No. 3	0 to 5 vdc (0 to 300 psia)	PCMTEA
		Preconditioned	Less than 220 psia	CWEA (ASC HI REG caution light)
	Helium tank No. 1 pressure - GP0001	Circuit No. 4	0 to 5 vdc (0 to 4,000 psia)	PCMTEA
		Preconditioned	More than 2,773 psia	CWEA (ASC PRESS warning light)
		Circuit No. 4	0 to 4,000 psia	Display (HELIUM indicator)
		504-4 (12)		
	Helium primary line solenoid valve closed - GP0318	Circuit No. 6	4 to 6 vdc (on) 0 to 0.5 vdc (off) 0 to 0.5 vdc (on) 28 vdc (off)	PCMTEA Display (ASCENT He REG 1 talkback)
	Helium secondary line solenoid valve closed - GP0320	Circuit No. 7	4 to 6 vdc (on) 0 to 0.5 vdc (off) 0 to 0.5 vdc (on) 28 vdc (off)	PCMTEA Display (ASCENT He REG 2 talkback)
	Main propulsion valve A closed - GR9609	Circuit No. 8	4 to 6 vdc (on) 0 to 0.5 vdc (off) 0 to 0.5 vdc (on) 28 vdc (off)	PCMTEA (For CWEA, refer to circuit No.1.) Display SYS A MAIN SOV talkback)
	Spare - Z6013	Circuit No. 9	4 to 6 vdc (on) 0 to 0.5 vdc (off) 0 to 0.5 vdc (on) 28 vdc (off)	CWEA Display
	Main propulsion valves B closed - GR9610	Circuit No. 10	4 to 6 vdc (on) 0 to 0.5 vdc (off) 0 to 0.5 vdc (on) 28 vdc (off)	PCMTEA (For CWEA, refer to circuit No.2.) Display (SYS B MAIN SOV talkback)
		504-1 (19)		
	Helium tank No. 2 pressure - GP0002	Circuit No. 1	0 to 5 vdc (0 to 4,000 psia)	PCMTEA and display (HELIUM indicator)
		Preconditioned	3.74 to 5.0 vdc (2,773 psia)	CWEA (ASC PRESS warning light)

Table 2.9-1. ERA-1 - Conditioned and Preconditioned Interfacing Signals (cont)

From (Subsystem)	Signal Nomenclature and Telemetry Code No.	To (Conditioning Unit)	Output	To (IS Assembly and Display)
MPS (cont)		504-1 (19) (cont)		
(descent propulsion section)	Helium regulator output manifold pressure - GQ3018	Circuit No. 2	0 to 5 vdc (0 to 300 psia)	PCMTEA
		Preconditioned	3.65 to 4.32 vdc (220 to 260 psia)	CWEA (DES REG warning light)
(ascent propulsion section)	Fuel bipropellant valve inlet pressure - GP1501	Circuit No. 3	0 to 5 vdc (0 to 250 psia)	PCMTEA
		Preconditioned	2.4 to 5.0 vdc (120 to 250 psia)	CWEA (ASC PRESS warning light)
	Oxidizer bipropellant valve inlet pressure - GP1503	Circuit No. 4	0 to 5 vdc (0 to 250 psia)	PCMTEA
		Preconditioned	2.4 to 5.0 vdc (120 to 250 psia)	CWEA (ASC PRESS warning light)
		506-3 (9)		
(descent propulsion section)	Fuel tank No. 1 fuel bulk temperature - GQ3718	Circuit No. 1	0 to 5 vdc (+20° to +120°F) +40° to +100°F	PCMTEA Display (FUEL TEMP indicator)
	Fuel tank No. 2 fuel bulk temperature - GQ3719	Circuit No. 2	0 to 5 vdc (+20° to +120°F) +40° to +100°F	PCMTEA Display (FUEL TEMP indicator)
(ascent propulsion section)	Fuel tank, fuel bulk temperature - GP0718	Circuit No. 3	0 to 5 vdc (+20° to +120°F) +40° to +100°F	PCMTEA Display (FUEL TEMP indicator)
	Oxidizer tank, oxidizer bulk temperature - GP1218	Circuit No. 4	0 to 5 vdc (+20° to +120°F) +40° to +100°F	PCMTEA Display (OXID TEMP indicator)
		506-3 (10)		
(descent propulsion section)	Oxidizer tank No. 1, oxidizer bulk temperature - GQ4218	Circuit No. 3	0 to 5 vdc (+20° to +120°F) +40° to +100°F	PCMTEA Display (OXID TEMP indicator)

Table 2.9-1. ERA-1 - Conditioned and Preconditioned Interfacing Signals (cont)

From (Subsystem)	Signal Nomenclature and Telemetry Code No.	To (Conditioning Unit)	Output	To (IS Assembly and Display)
MPS (cont)		506-3 (10) (cont)		
	Oxidizer tank No. 2, oxidizer bulk temperature - GQ4219	Circuit No. 4	0 to 5 vdc (+20° to +120°F) +40° to +100°F	PCMTEA Display (OXID TEMP indicator)
GN&CS		502-2 (15)		
(control electronics section)	Automatic thrust command voltage - GH1331	Circuit No. 1	0 to 5.0 vdc (0 to 12.0 vdc) 0 to 4.583 vdc (10% to 100%)	PCMTEA Display (CMD THRUST indicator)
	Manual thrust command voltage - GH1311	Circuit No. 2	0 to 5.0 vdc (0 to 14.6 vdc) 0.89 to 4.658 vdc (10% to 100%)	PCMTEA Display (CMD THRUST indicator)
	Abort sensor assembly voltage - GH3215	Circuit No. 4	3.857 to 4.714 vdc	CWEA (AGS warning light)
		503-2 (17)		
	Rate gyro assembly pickoff excitation (0.8 kc) voltage - GH1405	Circuit No. 3	4.19 to 4.84 vdc (26.0 to 30 vrms)	CWEA (CES AC warning)
		504-2 (2)		
	Jet No. B2U driver output - GH1426	Circuit No. 1	4 to 6 vdc (on) 0 to 0.5 vdc (off)	CWEA (RCS TCA warning light) and PCMTEA
	Jet No. B2U driver output - GH1427	Circuit No. 2	4 to 6 vdc (on) 0 to 0.5 vdc (off)	CWEA (RCS TCA warning light) and PCMTEA
	Jet No. A2A driver output - GH1428	Circuit No. 3	4 to 6 vdc (on) 0 to 0.5 vdc (off)	CWEA (RCS TCA warning light) and PCMTEA
	Jet No. B2L driver output - GH1429	Circuit No. 4	4 to 6 vdc (on) 0 to 0.5 vdc (off)	CWEA (RCS TCA warning light) and PCMTEA
	Jet No. A1U driver output - GH1430	Circuit No. 5	4 to 6 vdc (on) 0 to 0.5 vdc (off)	CWEA (RCS TCA warning light) and PCMTEA
	Jet No. B1D driver output - GH1431	Circuit No. 6	4 to 6 vdc (on) 0 to 0.5 vdc (off)	CWEA (RCS TCA warning light) and PCMTEA
	Jet No. B1L driver output - GH1433	Circuit No. 7	4 to 6 vdc (on) 0 to 0.5 vdc (off)	CWEA (RCS TCA warning light) and PCMTEA

Table 2.9-1. ERA-1 - Conditioned and Preconditioned Interfacing Signals (cont)

From (Subsystem)	Signal Nomenclature and Telemetry Code No.	To (Conditioning Unit)	Output	To (IS Assembly and Display)
GN&CS (cont)		504-2 (2) (cont)		
(Control electronics section)	Jet No. A1F driver output - GH1432	Circuit No. 8	4 to 6 vdc (on) 0 to 0.5 vdc (off)	CWEA (RCS TCA warning light) and PCMTEA
		504-2 (3)		
	Deadband select (wide) - GH1603	Circuit No. 1	4 to 6 vdc (on) 0 to 0.5 vdc (off)	PCMTEA
	Ascent engine arm (from panel 2) - GH1230	Circuit No. 2	4 to 6 vdc (on) 0 to 0.5 vdc (off)	PCMTEA
	Thrust chamber pressures - GR5041 through GR5046	Circuits No. 3 through 8	4 to 6 vdc (on) 0 to 0.5 vdc (off)	PCMTEA CWEA (RCS TCA warning light)
	Descent engine arm - GH1348	Circuit No. 9	4 to 6 vdc (on) 0 to 0.5 vdc (off)	PCMTEA
	X-translation over-ride - GH1893	Circuit No. 10	4 to 6 vdc (on) 0 to 0.5 vdc (off)	PCMTEA
		504-2 (4)		
(abort guidance section)	AEA test mode fail - GI3232	Circuit No. 1	4 to 6 vdc (on) 0 to 0.5 vdc (off)	CWEA (AGS warning light)
(control electronics section)	Jet No. B4U driver output - GH1418	Circuit No. 3	4 to 6 vdc (on) 0 to 0.5 vdc (off)	CWEA (RCS TCA warning light) and PCMTEA
	Jet No. B4F driver output - GH1420	Circuit No. 4	4 to 6 vdc (on) 0 to 0.5 vdc (off)	CWEA (RCS TCA warning light) and PCMTEA
	Jet No. A4D driver output - GH1419	Circuit No. 5	4 to 6 vdc (on) 0 to 0.5 vdc (off)	CWEA (RCS TCA warning light) and PCMTEA
	Jet No. A4R driver output - GH1421	Circuit No. 6	4 to 6 vdc (on) 0 to 0.5 vdc (off)	CWEA (RCS TCA warning light) and PCMTEA
	Jet No. A3U driver output - GH1422	Circuit No. 7	4 to 6 vdc (on) 0 to 0.5 vdc (off)	CWEA (RCS TCA warning light) and PCMTEA
	Jet No. B3D driver output - GH1423	Circuit No. 8	4 to 6 vdc (on) 0 to 0.5 vdc (off)	CWEA (RCS TCA warning light) and PCMTEA
	Jet No. B3A driver output - GH1424	Circuit No. 9	4 to 6 vdc (on) 0 to 0.5 vdc (off)	CWEA (RCS TCA warning light) and PCMTEA

Table 2.9-1. ERA-1 - Conditioned and Preconditioned Interfacing Signals (cont)

From (Subsystem)	Signal Nomenclature and Telemetry Code No.	To (Conditioning Unit)	Output	To (IS Assembly and Display)
GN&CS (cont)		504-2 (30) (cont)		
(Control electronics section)	Jet No. A3R driver output - GH1425	Circuit No. 10	4 to 6 vdc (on) 0 to 0.5 vdc (off)	CWEA (RCS TCA warning light) and PCMTEA
		504-2 (11)		
	Thrust chamber pressures - GH5031 through GR5040	Circuit No. 1 through 10	4 to 6 vdc (on) 0 to 0.5 vdc (off)	PCMTEA and CWEA (RCS TCA warning light)
		505-1 (16)		
(abort guidance section)	Frequency abort sensor assembly - GI3233	Circuit No. 2	0.63 to 4.38 vdc (385 to 415 cps)	CWEA (AGS warning light)
	Spare - Z6015	Circuit No. 3	0 to 5 vdc (380 to 420 cps)	PCMTEA
		506-3 (10)		
	Abort sensor assembly temperature - GI3301	Circuit No. 2	0 to 5 vdc +20° to +200°F	PCMTEA
		506-3 (21)		
(radar section)	Rendezvous radar temperature - GN7723	Circuit No. 3	0 to 5 vdc (-200° to +200° F) -54.07° to +147.69° 1.25 to 5.0 vdc (-100° to +200°F)	PCMTEA CWEA (HEATER caution light) Display (TEMP indicator panel 3)
	Landing radar antenna temperature - GN7563	Circuit No. 4	0 to 5 vdc (-200° to +200°F) -15° to +150°F -100° to +200°F	PCMTEA
EDS		504-1 (12)		
	ED SYS A relay transfer - GY0201	Circuit No. 11	4 to 6 vdc (on) 0 to 0.5 vdc (off) 0 to 0.5 vdc (on) 28 vdc (off)	PCMTEA Display (SYS A component caution light) CWEA (ED RELAYS caution light)

Table 2.9-1. ERA-1 - Conditioned and Preconditioned Interfacing Signals (cont)

From (Subsystem)	Signal Nomenclature and Telemetry Code No.	To (Conditioning Unit)	Output	To (IS Assembly and Display)
EDS (cont)		504-1 (12) (cont)		
	ED SYS B relay transfer - GY0202	Circuit No. 12	4 to 6 vdc (on) 0 to 0.5 vdc (off) 0 to 0.5 vdc (on) 28 vdc (off)	PCMTEA Display SYS B component caution light) CWEA (ED RELAYS caution light)
		504-2 (2)		
	Abort commanded - GY0050	Circuit No. 9	4 to 6 vdc (on) 0 to 0.5 vdc (off)	CWEA (inhibit signal) and PCM
	Spare - Z6002	Circuit No. 10	4 to 6 vdc (on) 0 to 0.5 vdc (off)	CWEA and PCMTEA
		504-4 (13)		
	Landing gear legs deployed - GM5000	Circuit No. 9	4 to 6 vdc (on) 0 to 0.5 vdc (off) 0 to 0.5 vdc (on) 28 vdc (off)	PCMTEA Display (LDG GEAR DEPLOY talkback)
		504-[illegible] (14)		
	System A relays K7 through K15 closed - GY0231	Circuit No. 9	4 to 6 vdc (on) 0 to 0.5 vdc (off)	PCMTEA
	System B relays K7 through K15 closed - GY0232	Circuit No. 10	4 to 6 vdc (on) 0 to 0.5 vdc (off)	PCMTEA
	EDS system A stage sequence relays (K1 through K6) - GY0201	Circuit No. 11	4 to 6 vdc (on) 0 to 0.5 vdc (off)	PCMTEA and display (SYS A component caution light) CWEA (ED RELAYS caution light)
	EDS system B stage sequence relays (K1 through K6) - GY0202	Circuit No. 12	4 to 6 vdc (on) 0 to 0.5 vdc (off)	PCMTEA and display (SYS B component caution light) CWEA (ED RELAYS caution light)
CS		504-1 (5)		
	S-band receiver AGC - GT0994	Circuit No. 4 Preconditioned	0 to 5 vdc	PCMTEA CWEA (S-BD RCVR caution light)
		503-2 (17)		
	Spare - Z6016	Circuit No. 2	0 to 5 vdc	PCMTEA

Table 2.9-2. ERA-2 - Conditioned and Preconditioned Interfacing Signals

From (Subsystem)	Signal Nomenclature and Telemetry Code No.	To (Conditioning Unit)	Output	To (IS Assembly and Display)
ECS		501-1 (8)		
	Descent oxygen tank pressure - GF3584	Circuit No. 1	2.22 vdc (135 psia)	CWEA (O_2 QTY caution light)
		Circuit No. 2	0 to 5 vdc (0 to 3,000 psia) 0 to 2,730 psia (0% to 100%) 0.5 vdc	PCMTEA Display (O_2 QUANTITY indicator) (For CWEA, refer to 501-1 (8) circuit No. 1.)
		504-3 (3)		
	Suit fan No. 1 failure - GF1083	Circuit No. 2	4 to 6 vdc (on) 0 to 0.5 vdc (off)	PCMTEA and CWEA (ECS caution light)
	Coolant fluid level - GF3986	Circuit No. 3	4 to 6 vdc (on) 0 to 0.5 vdc (off)	PCMTEA and CWEA (GLYCOL caution light)
	Suit fan No. 2 failure - GF1084	Circuit No. 6	4 to 6 vdc (on) 0 to 0.5 vdc (off)	PCMTEA and CWEA (SUIT/FAN warning light)
	EPS battery caution - GL4047	Circuit No. 7	4 to 6 vdc (on) 0 to 0.5 vdc (off)	PCMTEA
	Emergency oxygen valve electrically open - GF3572	Circuit No. 8	4 to 6 vdc (on) 0 to 0.5 vdc (off)	PCMTEA and CWEA (CABIN warning light)
		504-4 (12)		
	Cooling pump No. 1 failure - GF2936	Circuit No. 2	4 to 6 vdc (on) 0 to 0.5 vdc (off) 0 to 0.5 vdc (on) 28 vdc (off)	PCMTEA Display (GLYCOL component caution light)
		504-5 (13)		
	Coolant pump No. 2 failure - GF2935	Circuit No. 3	Same as circuit No. 1	CWEA (ECS caution light)
	Spare - Z6570	Circuit No. 4	Same as circuit No. 1	PCMTEA

Table 2.9-2. ERA-2 - Conditioned and Preconditioned Interfacing Signals (cont)

From (Subsystem)	Signal Nomenclature and Telemetry Code No.	To (Conditioning Unit)	Output	To (IS Assembly and Display
ECS (cont)		504-5 (5)		
	CO_2 secondary cartridge - GF1241	Circuit No. 1	4 to 6 vdc (on) 0 to 0.5 vdc (off)	PCMTEA
	Suit diverter valve position indicator closed - GF1221	Circuit No. 2	Same as circuit No. 1	PCMTEA
	Suit pressure relief valve position indicator closed - GF1211	Circuit No. 3	Same as circuit No. 1	PCMTEA
	Suit pressure relief valve position indicator open - GF1212	Circuit No. 4	Same as circuit No. 1	PCMTEA
	Oxygen regulator valve 306A locked closed - GF3071	Circuit No. 5	Same as circuit No. 1	PCMTEA
	Oxygen regulator valve 306A open - GF3070	Circuit No. 6	Same as circuit No. 1	PCMTEA
	Oxygen regulator valve 306B locked closed - GF3073	Circuit No. 7	Same as circuit No. 1	PCMTEA
	Oxygen regulator valve 306B open - GF3075	Circuit No. 8	Same as circuit No. 1	PCMTEA
	Cabin gas return valve position indicator closed - GF1231	Circuit No. 9	Same as circuit No. 1	PCMTEA
	Cabin gas return valve position indicator open - GF1232	Circuit No. 10	Same as circuit No. 1	PCMTEA
	Suit inlet valve position indicator No. 1 closed - GF1201	Circuit No. 11	Same as circuit No. 1	PCMTEA

Table 2.9-2. ERA-2 - Conditioned and Preconditioned Interfacing Signals (cont)

From (Subsystem)	Signal Nomenclature and Telemetry Code No.	To (Conditioning Unit)	Output	To (IS Assembly and Display)
ECS (cont)		504-5 (5) (cont)		
	Suit inlet valve position indicator No. 2 closed - GF1202	Circuit No. 12	Same as circuit No. 1	PCMTEA
		506-3 (6)		
	Spare - Z6574	Circuit No. 2	0 to 5 vdc (+20° to +120° F)	PCMTEA
	Main sublimator inlet water temperature - GF4511	Circuit No. 4	0 to 5 vdc (+20° to +160° F) +70° F normal	PCMTEA
		506-3 (20)		
ECS	Main sublimator coolant inlet temperature - GF2531	Circuit No. 1	0 to 5 vdc (+20° to +120° F) +70° F normal	PCMTEA and display (A TEMP indicator)
RCS	Fuel tank A temperature - GR2121	Circuit No. 2	0 to 5 vdc (+20° to +120° F) +70° F normal	PCMTEA and display (A TEMP indicator)
	Fuel tank B temperature - GR2122	Circuit No. 3	0 to 5 vdc (+20° to +160° F) +70° F normal	PCMTEA and display (B TEMP indicator)
EPS		501-1 (8)		
	4.3 vdc supply - GH1408	Circuit No. 3	4.3 to 5.0 vdc	CWEA (CES DC warning light)
	LM Pilot's bus voltage - GC0302	Circuit No. 4	0 to 5 vdc	PCMTEA and display (VOLTS indicator) (For CWEA, refer to 502-2 (15) circuit No. 4.)
		502-2 (15)		
	Primary -4.7 volts dc - GH1488	Circuit No. 1	3.50 to 4.33 vdc	CWEA (PRE AMPS caution light)

Table 2.9-2. ERA-2 - Conditioned and Preconditioned Interfacing Signals (cont)

From (Subsystem)	Signal Nomenclature and Telemetry Code No.	To (Conditioning Unit)	Output	To (IS Assembly and Display)
EPS (cont)		502-2 (15) (cont)		
	Backup -4.7 volts dc - GH1489	Circuit No. 2	3.50 to 4.33 vdc	CWEA (PRE AMPS caution light)
	Abort sensor assembly +28 vdc - GI3214	Circuit No. 3	3.94 to 4.81 vdc	CWEA (AGS warning light)
	LM Pilot's bus voltage - GC0302	Circuit No. 4	3.31 to 5.0 vdc	CWEA (DC BUS warning light) (For PCMTEA and display, refer to 501-1 (8) circuit No. 4.)
		502-2 (16)		
	Battery No. 1 voltage - GC0201	Circuit No. 1	0 to 5 vdc	PCMTEA and display (VOLTS indicator)
	Battery No. 2 voltage - GC0202	Circuit No. 2	0 to 5 vdc	PCMTEA and display (VOLTS indicator)
	Battery No. 3 voltage - GC0203	Circuit No. 3	0 to 5 vdc	PCMTEA and display (VOLTS indicator)
	Battery No. 4 voltage - GC0204	Circuit No. 4	0 to 5 vdc	PCMTEA and display (VOLTS indicator)
		502-2 (17)		
	Battery No. 5 voltage - GC0205	Circuit No. 1	0 to 5 vdc	PCMTEA and display (VOLTS indicator)
		502-2 (18)		
	Battery No. 6 voltage - GC0206	Circuit No. 1	0 to 5 vdc	PCMTEA and display (VOLTS indicator)
		504-4 (4)		
	Battery No. 1 high-voltage tap - GC4361	Circuit No. 1	4 to 6 vdc (on) 0 to 0.5 vdc (off) 0 to 0.5 vdc (on) 28 vdc (off)	PCMTEA Display (SE BAT 1 talkback)
	Battery No. 1 low-voltage tap - GC4362	Circuit No. 2	4 to 6 vdc (on) 0 to 0.5 vdc (off) 0 to 0.5 vdc (on) 28 vdc (off)	PCMTEA Display (SE BAT 1 talkback)

Table 2.9-2. ERA-2 - Conditioned and Preconditioned Interfacing Signals (cont)

From (Subsystem)	Signal Nomenclature and Telemetry Code No.	To (Conditioning Unit)	Output	To (IS Assembly and Display)
EPS (cont)		504-4 (4) (cont)		
	Battery No. 2 high-voltage tap - GC4363	Circuit No. 3	4 to 6 vdc (on) 0 to 0.5 vdc (off) 0 to 0.5 vdc (on) 28 vdc (off)	PCMTEA Display (SE BAT 2 talkback)
	Battery No. 2 low-voltage tap - GC4364	Circuit No. 4	4 to 6 vdc (on) 0 to 0.5 vdc (off) 0 to 0.5 vdc (on) 28 vdc (off)	PCMTEA Display (SE BAT 2 talkback)
	Battery No. 3 high-voltage tap - GC4365	Circuit No. 5	4 to 6 vdc (on) 0 to 0.5 vdc (off) 0 to 0.5 vdc (on) 28 vdc (off)	PCMTEA Display (CDR BAT 3 talkback)
	Battery No. 3 low-voltage tap - GC4366	Circuit No. 6	4 to 6 vdc (on) 0 to 0.5 vdc (off) 0 to 0.5 vdc (on) 28 vdc (off)	PCMTEA Display (CDR BAT 3 talkback)
	Battery No. 4 high-voltage tap - GC4367	Circuit No. 7	4 to 6 vdc (on) 0 to 0.5 vdc (off) 0 to 0.5 vdc (on) 28 vdc (off)	PCMTEA Display (CDR BAT 4 talkback)
	Battery No. 4 low-voltage tap - GC4368	Circuit No. 8	4 to 6 vdc (on) 0 to 0.5 vdc (off) 0 to 0.5 vdc (on) 28 vdc (off)	PCMTEA Display (CDR BAT 4 talkback)
	Battery No. 5 on (Commander's bus) - GC4369	Circuit No. 9	4 to 6 vdc (on) 0 to 0.5 vdc (off) 0 to 0.5 vdc (on) 28 vdc (off)	PCMTEA Display (BAT 5 BACKUP CDR FEED talkback)
	Battery No. 6 on (Commander's bus) - GC4370	Circuit No. 10	4 to 6 vdc (on) 0 to 0.5 vdc (off) 0 to 0.5 vdc (on) 28 vdc (off)	PCMTEA Display (BAT 6 NORMAL CDR FEED talkback)
	Battery No. 5 on (LM Pilot's bus) - GC4371	Circuit No. 11	4 to 6 vdc (on) 0 to 0.5 vdc (off) 0 to 0.5 vdc (on) 28 vdc (off)	PCMTEA Display (BAT 5 NORMAL SE FEED talkback)
	Battery No. 6 on (LM Pilot's bus) - GC4372	Circuit No. 12	4 to 6 vdc (on) 0 to 0.5 vdc (off) 0 to 0.5 vdc (on) 28 vdc (off)	PCMTEA Display (BAT 6 BACK UP SE FEED talkback)

Table 2.9-2. ERA-2 - Conditioned and Preconditioned Interfacing Signals (cont)

From (Subsystem)	Signal Nomenclature and Telemetry Code No.	To (Conditioning Unit)	Output	To (IS Assembly and Display)
EPS (cont)		504-4 (12)		
	CWEA power supply failure - GL4054	Circuit No. 1	4 to 6 vdc (on) 0 to 0.5 vdc (off) 0 to 0.5 vdc (on) 28 vdc (off)	PCMTEA
MPS (descent propulsion section)	Descent propellant tanks (liquid level low) - GQ4455	Circuit No. 3	4 to 6 vdc (on) 0 to 0.5 vdc (off)	PCMTEA and CWEA (DES QTY warning light)
	Spare - Z6556	Circuit No. 4	Same as circuit No. 2	Same as circuit No. 2
AGS	AGS mode control (attitude hold) - GH1642	Circuit No. 5	4 to 6 vdc (on) 0 to 0.5 vdc (off)	PCMTEA
	AGS mode control (automatic) - GH1641	Circuit No. 6	4 to 6 vdc (on) 0 to 0.5 vdc (off)	PCMTEA
EPS	*Battery No. 1 malfunction (plus battery fault signal from IS for BAT FAULT component caution light) - GC9961	Circuit No. 7	4 to 6 vdc (on) 0 to 0.5 vdc (off) 0 to 0.5 vdc (on) 5.0 vdc (off)	PCMTEA Display (BAT FAULT component caution light) (For CWEA, refer to 504-5 (13) Circuit No. 7.)
	Battery No. 2 malfunction (same as circuit No. 7) - GC9962	Circuit No. 8	4 to 6 vdc (on) 0 to 0.5 vdc (off) 0 to 0.5 vdc (on) 5.0 vdc (off)	PCMTEA Same as circuit No. 7 (For CWEA, refer to 504-5 (13) circuit No. 8.)
	Battery No. 3 malfunction (same as circuit No. 7) - GC9963	Circuit No. 9	4 to 6 vdc (on) 0 to 0.5 vdc (off) 0 to 0.5 vdc (on) 5.0 vdc (off)	PCMTEA Same as circuit No. 7 (For CWEA, refer to 504-5 (13) circuit No. 9.)
	Battery No. 4 malfunction (same as circuit No. 7) - GC9964	Circuit No. 10	4 to 6 vdc (on) 0 to 0.5 vdc (off) 0 to 0.5 vdc (on) 5.0 vdc (off)	PCMTEA Same as circuit No. 7 (For CWEA, refer to 504-5 (13) circuit No. 10.)
	Battery No. 5 malfunction (same as circuit No. 7) - GF9965	Circuit No. 11	4 to 6 vdc (on) 0 to 0.5 vdc (off) 0 to 0.5 vdc (on) 5.0 vdc (off)	PCMTEA Same as circuit No. 7 (For CWEA, refer to 504-5 (13) circuit No. 11.)

Table 2.9-2. ERA-2 - Conditioned and Preconditioned Interfacing Signals (cont)

From (Subsystem)	Signal Nomenclature and Telemetry Code No.	To (Conditioning Unit)	Output	To (IS Assembly and Display)
EPS (cont)		504-4 (12) (cont)		
	Battery No. 6 malfunction (same as circuit No. 7) - GC9966	Circuit No. 12	4 to 6 vdc (on) 0 to 0.5 vdc (off) 0 to 0.5 vdc (on) 5.0 vdc (off)	PCMTEA Same as circuit No. 7 for CWEA, refer to 504-5 (13) circuit No. 12.)
		504-5 (13)		
	**Battery No. 1 malfunction (plus EPS battery caution signal from IS) - GC9961	Circuit No. 7	Same as circuit No. 1	CWEA (BATTERY caution light) (For PCMTEA and display, refer to 504-4 (12) circuit No. 7.)
	Battery No. 2 malfunction (same as circuit No. 7) - GC9962	Circuit No. 8	Same as circuit No. 1	CWEA (BATTERY caution light) (For PCMTEA and display, refer to 504-4 (12) circuit No. 8.)
	Battery No. 3 malfunction (same as circuit No. 7) - GC9963	Circuit No. 9	Same as circuit No. 1	CWEA (BATTERY caution light) (For PCMTEA and display, refer to 504-4 (12) circuit No. 9.)
	Battery No. 4 malfunction (same as circuit No. 7) - GC9964	Circuit No. 10	Same as circuit No. 1	CWEA (BATTERY caution light) (For PCMTEA and display, refer to 504-4 (12) circuit No. 10.)
	Battery No. 5 malfunction (same as circuit No. 7) - GC9965	Circuit No. 11	Same as circuit No. 1	CWEA (BATTERY caution light) (For PCMTEA and display, refer to 504-4 (12) circuit No. 11.)
	Battery No. 6 malfunction (same as circuit No. 7) - GC9966	Circuit No. 12	Same as circuit No. 1	CWEA (BATTERY caution light) (For PCMTEA and display, refer to 504-4 (12) circuit No. 12.)
MPS		504-3 (2)		
(ascent propulsion section)	Fuel tank low level - GP0908	Circuit No. 6	4 to 6 vdc (on) 0 to 0.5 vdc (off)	PCMTEA and CWEA (ASC QTY caution light)
	Oxidizer tank low level - GP1408	Circuit No. 7	4 to 6 vdc (on) 0 to 0.5 vdc (off)	PCMTEA and CWEA (ASC QTY caution light)
	MASTER ALARM identification - GL4069	Circuit No. 8	4 to 6 vdc (on) 0 to 0.5 vdc (off)	PCMTEA

Table 2.9-2. ERA-2 - Conditioned and Preconditioned Interfacing Signals (cont)

From (Subsystem)	Signal Nomenclature and Telemetry Code No.	To (Conditioning Unit)	Output	To (IS Assembly) and Display)
MPS (cont)				
		504-5 (14)		
	Shutoff valves A/B in midposition - GQ7498	Circuit No. 9	Same as circuit No. 1	PCMTEA
	Shutoff valves G/D in midposition - GQ7499	Circuit No. 10	Same as circuit No. 1	PCMTEA
(ascent propulsion section)	Solenoid/bipropellant valves A mismatch - GQ2997	Circuit No. 11	Same as circuit No. 1	PCMTEA
	Solenoid/bipropellant valves B mismatch - GQ2998	Circuit No. 12	Same as circuit No. 1	PCMTEA
		506-3 (21)		
ECS	Ascent water line No. 1 temperature - GF4585T	Circuit No. 3	0 to 5 vdc (-200° to +200° F)	PCMTEA
	Ascent waterline No. 2 temperature - GF4586T	Circuit No. 4	0 to 5 vdc (-200° to +200° F) +70° F normal	PCMTEA
GN&CS		502-2 (17)		
(control electronics section)	X-translation command voltage - GH1240	Circuit No. 2	0 to 5 vdc	PCMTEA
	Y-translation command voltage - GH1241	Circuit No. 3	0 to 5 vdc	PCMTEA
	Z-translation command voltage - GH1242	Circuit No. 4	0 to 5 vdc	PCMTEA
		502-2 (18)		
	Roll logic input error voltage - GH1249	Circuit No. 2	0 to 5 vdc	PCMTEA

Table 2.9-2. ERA-2 - Conditioned and Preconditioned Interfacing Signals (cont)

From (Subsystem)	Signal Nomenclature and Telemetry Code No.	To (Conditioning Unit)	Output	To (IS Assembly and Display)
GN&CS (cont)		502-2 (18) (cont)		
(control electronics section)	Yaw logic input error voltage - GH1247	Circuit No. 3	0 to 5 vdc	PCMTEA
	Pitch logic input error voltage - GH1248	Circuit No. 4	0 to 5 vdc	PCMTEA
		502-2 (19)		
	+15-vdc supply - GH1406	Circuit No. 1	4.12 to 4.71 vdc	CWEA (CES DC warning light)
	-15-vdc supply - GH1407	Circuit No. 2	4.12 to 4.71 vdc	CWEA (CES DC warning light)
	+6.0-vdc supply - GH1493	Circuit No. 3	3.86 to 4.71 vdc	CWEA (CES DC warning light)
	-6.0-vdc supply - GH1494	Circuit No. 4	3.86 to 4.71 vdc	CWEA (CES DC warning light)
		503-2 (7)		
	Rate gyro assembly spin motor line A-B voltage - GH1401	Circuit No. 1	3.83 to 4.83 vdc	CWEA (CES AC warning light)
	Rate gyro assembly spin motor line B-C voltage - GH1402	Circuit No. 2	3.83 to 4.83 vdc	CWEA (CES AC warning light)
	Rate gyro assembly spin motor line C-A voltage - GH1403	Circuit No. 3	3.83 to 4.83 vdc	CWEA (CES AC warning light)
GN&CS		504-3 (2)		
(radar section)	CES A-C power supply failure - GL4026	Circuit No. 1	4 to 6 vdc (on) 0 to 0.5 vdc (off)	PCMTEA
	AGS power supply failure - GL4028	Circuit No. 2	4 to 6 vdc (on) 0 to 0.5 vdc (off)	PCMTEA
	Landing radar range data not good - GN7521	Circuit No. 3	4 to 6 vdc (on) 0 to 0.5 vdc (off)	PCMTEA

Table 2.9-2. ERA-2 - Conditioned and Preconditioned Interfacing Signals (cont)

From (Subsystem)	Signal Nomenclature and Telemetry Code No.	To (Conditioning Unit)	Output	To (IS Assembly and Display)
GN&CS (cont)		504-3 (2) (cont)		
(radar section)	Landing radar velocity data - GN7557	Circuit No. 4	4 to 6 vdc (on) 0 to 0.5 vdc (off)	PCMTEA and CWEA
	Rendezvous radar, no track indication - GN7621	Circuit No. 5	4 to 6 vdc (on) 0 to 0.5 vdc (off)	PCMTEA and CWEA (RNDZ RDR caution light)
(control electronics section)	Ascent engine on/ off to propulsion - GH1260	Circuit No. 10	4 to 6 vdc (on) 0 to 0.5 vdc (off)	PCMTEA and CWEA
(abort guidance section)	Abort guidance section warmup - GI3305	Circuit No. 11	4 to 6 vdc (on) 0 to 0.5 vdc (off)	PCMTEA and CWEA
	CES d-c power supply failure - GL4027	Circuit No. 12	4 to 6 vdc (on) 0 to 0.5 vdc (off)	PCMTEA
GN&CS		504-3 (3)		
	Primary guidance and navigation section - GG9003	Circuit No. 1	4 to 6 vdc (on) 0 to 0.5 vdc (off)	PCMTEA
(control electronics section)	Descent engine on - GH1301	Circuit No. 4	4 to 6 vdc (on) 0 to 0.5 vdc (off)	PCMTEA and CWEA
	Guidance select switch (AGS) - GH1621	Circuit No. 5	4 to 6 vdc (on) 0 to 0.5 vdc (off)	PCMTEA and CWEA
	Pitch trim failure - GH1323	Circuit No. 9	4 to 6 vdc (on) 0 to 0.5 vdc (off)	PCMTEA and CWEA (ENG GMBL caution light)
	Roll trim failure - GH1330	Circuit No. 10	4 to 6 vdc (on) 0 to 0.5 vdc (off)	PCMTEA and CWEA (ENG GMBL caution light)
(primary guidance and navigation section)	LM guidance computer warning - GG9001	Circuit No. 11	4 to 6 vdc (on) 0 to 0.5 vdc (off)	PCMTEA and CWEA (LGC warning light)
	Inertial subsystem warning - GG9002	Circuit No. 12	4 to 6 vdc (on) 0 to 0.5 vdc (off)	PCMTEA and CWEA (ISS warning light)
		504-5 (13)		
(control electronics section)	Roll attitude control selector - GH1628	Circuit No. 1	4 to 6 vdc (on) 0 to 0.5 vdc (off)	PCMTEA

Table 2.9-2. ERA-2 - Conditioned and Preconditioned Interfacing Signals (cont)

From (Subsystem)	Signal Nomenclature and Telemetry Code No.	To (Conditioning Unit)	Output	To (IS Assembly and Display)
GN&CS (cont)		504-5 (13) (cont)		
(control electronics section)	Pitch attitude control selector - GH1629	Circuit No. 2	Same as circuit No. 1	PCMTEA
(abort guidance section)	Abort guidance section standby condition - GI3306	Circuit No. 5	Same as circuit No. 1	PCMTEA
(control electronics section)	Yaw attitude control selector - GH1630	Circuit No. 6	Same as circuit No. 1	PCMTEA
		504-5 (14)		
(control electronics section)	Abort stage command - GH1283	Circuit No. 1	4 to 6 vdc (on) 0 to 0.5 vdc (off)	PCMTEA
	Engine fire override - GH1286	Circuit No. 2	Same as circuit No. 1	PCMTEA
	PGNS mode select - (automatic) GH1643	Circuit No. 3	Same as circuit No. 1	PCMTEA
	PGNS mode select - (attitude hold) - GH1644	Circuit No. 4	Same as circuit No. 1	PCMTEA
	Attitude controller assembly out of detent - GH1204	Circuit No. 5	Same as circuit No. 1	PCMTEA
	Automatic engine-on command - GH1214	Circuit No. 6	Same as circuit No. 1	PCMTEA
	Automatic engine-off command - GH1217	Circuit No. 7	Same as circuit No. 1	PCMTEA
	Unbalanced couples - GH1896	Circuit No. 8	Same as circuit No. 1	PCMTEA
		507-1 (9)		
	Pitch gimbal drive actuator position - GH1313, GH1314	Circuit No. 1	0 to 5 vdc	PCMTEA

Table 2.9-2. ERA-2 - Conditioned and Preconditioned Interfacing Signals (cont)

From (Subsystem)	Signal Nomenclature and Telemetry Code No.	To (Conditioning Unit)	Output	To (IS Assembly and Display)
GN&CS (cont)		507-1 (9) (cont)		
(control electronics section)		Circuit No. 2	Same as circuit No. 1	PCMTEA
	Yaw attenuator error - GH1455	Circuit No. 3	Same as circuit No. 1	PCMTEA
	Pitch attenuator error - GH1456	Circuit No. 4	Same as circuit No. 1	PCMTEA
		507-1 (10)		
	Roll attenuator error - GH1457	Circuit No. 1	0 to 5 vdc (-3.5 to +3.5 vrms)	PCMTEA
	Yaw rate gyro signal - GH1461	Circuit No. 2	0 to 5 vdc (-3.5 to +3.5 vrms)	PCMTEA
	Pitch rate gyro signal - GH1462	Circuit No. 3	0 to 5 vdc (-3.5 to +3.5 vrms)	PCMTEA
	Roll rate gyro signal - GH1463	Circuit No. 4	0 to 5 vdc (-3.5 to +3.5 vrms)	PCMTEA
CS		506-3 (21)		
	S-band steerable antenna electronic assembly temperature - GT0454	Circuit No. 2	0 to 5 vdc (-200° to +200° F) 1.7 to 4.4 vdc	Display (TEMP indicator, panel 3) CWEA (HEATER caution light) PCMTEA
		506-3 (20)		
ECS	Main sublimator coolant outlet temperature - GF2581	Circuit No. 4	0 to 5 vdc (+20° to +120° F) +70° F normal	PCMTEA and display

2.9.4.2.1 D-C Amplifiers.

The d-c amplifier subassembly (501-1) contains four d-c amplifier channels which receive unipolar or bipolar analog voltage inputs and provides four single-channel linear outputs. The unipolar input range is adjustable from 0 to +0.2 volts dc and 0 to +5 volts dc. A maximum input of +0.2 to +5 volts dc provides a +5-volt output. The bipolar input range is adjustable from -0.1 to +0.1 volts dc and -2.5 to +2.5 volts dc. A maximum negative input of -0.1 to -2.5 volts dc provides zero volts output. A maximum positive input of +0.1 to +2.5 volts dc provides a +5-volt output. When operating in a unipolar mode, the output is directly proportional to the input. In the bipolar mode, zero input produces a +2.5-volt output.

The inputs to the d-c amplifier subassembly are amplified by a variable-gain d-c amplifier and fed to a 1.8-kc modulator. The modulated signal is routed through a transformer, for impedance matching and ground isolation. The signal is then demodulated and fed to a two-stage filter circuit that attenuates the ripple and provides the required bandpass. The d-c signal is then fed to an output amplifier to provide a low output impedance. A zener diode across the amplifier limits the output to ensure that maximum and minimum voltage output limits are not exceeded. A zero offset and gain control is provided so that zero input voltage results in zero output voltage and the proper gain is realized.

2.9.4.2.2 Attenuators.

The attenuator subassembly (502-2) contains four separate attenuation channels, which provide signal conditioning and input, output, and ground isolation. Each channel accepts either unipolar or bipolar analog d-c voltage inputs and provides four single-channel outputs (0 to 5 volts dc). When operating in the bipolar mode, the attenuators receive input signals with a range, which is adjustable from -2.5 to +2.5 volts dc and -20 to +20 volts dc. The maximum negative input (adjustable from -2.5 to -20 volts dc) corresponds to a zero output; the maximum positive input (adjustable from +2.5 to +20 volts dc), to a +5-volt d-c output. Zero input provides a +2.5-volt output. When operating in the unipolar mode, the output is directly proportional to the input. In this mode, analog inputs are zero and 5 volts dc (minimum attenuation) to 40 volts dc (attenuation of 8, or a gain of 1/8). The maximum input corresponds to a +5-volt output.

The input signal is applied to an attenuator, which has a gain control for setting full-scale output for maximum input. The attenuator output is conditioned by a d-c amplifier and fed to a transistor chopper. The chopper output is routed through a transformer for input, output, and ground isolation. This signal is then rectified and fed to a two-stage filter that attenuates the ripple and provides the required bandpass. The d-c signal is then fed to an output amplifier to provide a low output impedance. A zener diode across the amplifier limits the output to ensure that the maximum and minimum voltage output limits are not exceeded.

2.9.4.2.3 AC-to-DC Converters.

Each ac-to-dc converter subassembly (503-2) contains three separate ac-to-dc converter nels, which condition sinusoidal a-c input signals within a frequency range of 400±20 cps to 800±20 cps. Each channel also provides input, output, and ground isolation. The three single-channel analog outputs are within a range of 0 to 5 volts dc. The outputs are proportional to the average a-c voltage input. Converter gain is adjustable to provide full-scale output (+5 volts dc), corresponding to full-scale inputs of 21 to 31 and 100 to 150 volts rms.

The input signal is applied to an attenuator, which has a gain control for setting full-scale output for maximum input. The attenuator output is fed through an a-c amplifier to a transformer for input, output, and ground isolation. After demodulation by a precision rectifier, the signal is fed to an active filter that attenuates the ripple and provides proper bandpass and low output impedance. A zener diode across the amplifier limits the output to ensure that the maximum and minimum voltage output limits are not exceeded.

2.9.4.2.4 Analog Signal Isolating Buffers.

The analog signal isolating buffer assembly (504-1) contains four buffer channels which receive 0- to 5-volt d-c input signals and provide input, output, and ground isolation and unity gain at its four single-output channels. Operation of the buffer channels is similar to that of d-c amplifier subassembly 501-1, except that they all are unipolar and have a fixed unity gain.

The input signals are conditioned by a unity gain d-c amplifier and fed to a transistor chopper. The chopper output is routed through a transformer for input, output, and ground isolation. The signal is then rectified and passed through a filter that attenuates ripple and provides proper band-pass. The filter output is fed to an output buffer amplifier to provide a low output impedance. A zener diode across the amplifier output ensures that the maximum and minimum voltage output limits are not exceeded.

2.9.4.2.5 Discrete Signal Isolating Buffers.

The discrete signal isolating buffer assemblies (504-2, -3, -4, and 5) receive remote switch (solid-state or mechanical) closures and provide either 10 dual-channel, 12 single-channel, or 12 dual-channel output step voltages, and solid-state closures.

Buffer 504-2 has a floating input to provide isolation. The buffer has 10 dual buffer channels with discrete output step voltages (0.0 to 5.0 volts dc). Each channel is fully isolated from input, output, and ground. Upon receiving a mechanical or solid-state switch closure at the input, the selected channel provides two step voltage output signals. An input of 14 to 28 volts dc or an open circuit produces zero volts at the output. A discrete closure input actuates an electronic switch that connects a reference square-wave oscillator to a transformer for input-to-output and ground isolation. The signals are then rectified and fed to a filter that attenuates the ripple. A zener diode across the filter limits the output to ensure that maximum and minimum voltage output limits are not exceeded.

Buffers 504-3, -4, and -5 receive signals from floating sources; the negative input terminals are grounded to the LM 28-volt power supply. Buffers 504-3 and -4 have 12 dual-channel outputs: buffer 504-5 has 12 single-channel outputs. The dual channels of buffer 504-3 provide 24 discrete output step voltages that are isolated. These output voltages range from 3.4 to 6 volts dc when the buffer is turned on; from 0.0 to 0.5 volt dc when it is turned off. The dual channels of buffer 504-4 provide 12 discrete output step voltages that are isolated. They range from 3.4 to 6 volts dc when the buffer is turned on; from 0.0 to 0.5 volts dc when it is turned off. These dual channels also provide 12 solid-state switch closure outputs that are used for talkback or lamp displays. The single-channel outputs of buffer 504-5 provide 12 discrete output step voltages that are isolated. These voltages have the same range as those of buffers 504-3 and -4.

A discrete closure for these buffers actuates an electronic switch, which connects the +28-volt d-c power supply to a square-wave oscillator. The oscillator is coupled to the output through a transformer for input, output and ground isolation. The signal is then rectified and fed to a filter that attenuates the ripple. A zener diode across the filter limits the output to ensure that maximum and minimum voltage output limits are not exceeded.

2.9.4.2.6 Frequency-to-DC Converters.

The frequency-to-dc converter subassembly (505-1) contains three frequency-to-dc converter channels that receive sinusoidal inputs with frequency variations between 380 and 420 cps and a carrier amplitude of 20 to 130 volts rms. Zero volts dc corresponds to the low limit of the input frequency range; 5 volts dc, to the high limit of the input frequency range.

The input sine wave is limited and changed to peaked pulses in a differentiator circuit. Each positive spike of the differentiator output triggers a one-shot multivibrator at a rate dependent upon the input frequency. The multivibrator has an accurate timing circuit, which maintains the on state for a definite period. Each state of the multivibrator actuates the switching of a precision d-c reference. At the low-frequency limit, the differentiator and multivibrator outputs are equal in time periods, providing a zero-volt output. At the high-frequency limit, the outputs are unequal in time periods, providing a voltage that is amplified, transformer coupled for isolation, rectified, and filtered to a 5-volt d-c level. A zener diode across the amplifier output ensures that maximum and minimum voltage output limits are not exceeded.

2.9.4.2.7 Resistance-to-DC Converters.

The resistance-to-dc converter subassemblies (506-3 and -4) contain four dual resistance-to-dc converter channels. Each subassembly provides two 0- to 5-volt d-c outputs, corresponding to resistance values of the associated subsystem temperature sensors, at each channel.

Each resistance-to-dc converter includes a dc energized Wheatstone bridge and an amplifier. Bridge excitation is obtained from a precision regulator circuit. The bridge output is linear with temperature changes as follows:

Subassembly	Temperature (°F)	Resistance (ohms)
506-3	+20 to +120	1,364 to 1,671
	+20 to +160	1,364 to 1,793
	+20 to +200	1,364 to 1,914
	-200 to +200	665 to 1,914
	-200 to +500	665 to 2,795
506-4	-60 to +260	1,113 to 2,092

Each 506-3 bridge circuit can be shunted to change the bridge sensitivity in accordance with the required sensor resistance ranges. The 506-4 is a single-range unit. The bridge output signal is amplified and provides a d-c output voltage, which is an analog of the input resistance. The d-c voltage output is then processed through circuits that ensure that each channel provides two fully isolated voltage outputs. A zener diode across the amplifier output ensures that maximum and minimum voltage output limits are not exceeded.

2.9.4.2.8 Phase-Sensitive Demodulators.

The phase-sensitive demodulator subassembly (507-1) receives a-c signals from LM subsystems, compares them to a reference signal of the same frequency, and provides 0- to 5-volts d-c outputs. The subassembly contains four phase-sensitive demodulator channels. Each channel includes an input amplifier, a demodulator, and an active filter. The sinusoidal input voltage to be conditioned is of the same frequency as the phase reference signal and is either in phase or 180 out of phase with it (input signal is either positive or negative respectively). For negative signals, the output varies linearly from 2.5 to 0 volts: for positive signals, the output varies linearly from 2.5 to 5 volts. The relationship between the input signal and the phase of the reference signal, and the resultant d-c output is as follows:

Input Voltage (vrms)	Phase Angle	D-C Output (Volts)
Maximum	180°	0
0.5 maximum	180°	1.25
0.0	180°/0°	2.50
0.5 maximum	0°	3.75
Maximum	0°	5.0

The input signal is fed to an attenuator and gain control circuit that permits adjusting the full-scale output to 5 volts dc for an a-c input of 2.8, 3.5, 15, and 26 volts. The signal then passes through an a-c amplifier to a demodulator, where it is compared to the reference signal. The resultant demodulated signal passes through a filter circuit that provides the required bandpass. A zener diode across the amplifier output ensures that maximum and minimum voltage output limits are not exceeded.

2.9.4.3 Pulse-Code-Modulation and Timing Electronics Assembly.

The PCMTEA converts all data inputs generated by the subsystem sensors into serial digital output signals. These signals are routed to the CS for transmission to MSFN or the CSM. The PCMTEA consists of pulse-code-modulation equipment that processes subsystem data and timing electronics equipment that provides timing and synchronizing signals to other LM subsystems. The PCMTEA (figure 2.9-2) consists of the following:

- Pulse-code-modulation equipment
  - Analog multiplexer gate drivers
  - High-level analog multiplexer and high-speed gates
  - Analog-to-digital converter (coder)
  - Calibrator
  - Programmer
  - Digital multiplexer
  - Output register and data transfer buffers
  - Power supply

- Timing electronics equipment
  - Phase-locked oscillator and doublers
  - Oscillator failure-detection circuits
  - Decision network
  - Timing generator
  - Time accumulator and serial time code generator

2.9.4.3.1 Analog Multiplexer Gate Drivers. (See figure 2.9-5.)

Upon command from the programmer, the analog multiplexer gate drivers perform the switching required by the high-level analog gates for sampling the analog inputs. Two basic types of drivers are used: row and column. A row driver is used to activate 6 to 24 gates; a column driver, 7 to 14 gates. A row driver is a compound NPN transistor stage, used in the common-emitter configuration. The row driver is switched on by a positive-going row command from the programmer. Each column driver is a two-stage, direct-coupled amplifier that uses NPN and PNP transistors connected in the common-emitter configuration. Each column driver is switched on by a positive-going column command from the programmer.

2.9.4.3.2 High-Level Analog Multiplexer and High-Speed Gates. (See figures 2.9-6 and 2.9-7.)

The high-level analog gates sample 277 high-level (0 to 5 volts) analog input channels from LM equipment and generate PAM outputs for each channel input. The pulses occur at the sampling rate of the channel; the amplitude of each pulse represents the analog input at sampling time. The high-level analog gates comprise matrix combinations in an OR-gate arrangement to provide as many as 24 channel inputs per row, with multiple rows forming the desired matrices. Five primary gates in each row use a common sequencer gate. The sequencer gate prevents a shorted primary gate from causing loss of data from more than four primary gates. The shorted gate is not affected and remains on, allowing data to flow continuously. The matrices process the high-level analog inputs and supply four PAM outputs to the high-speed gates. The high-speed gates contain four electronic switches and four associated drivers; they sharply time each pulse in the PAM train. The primary and secondary gates do not turn off sharply; therefore, the trailing edge of each PAM pulse at the input to the sequencer gates gradually trails off to zero. The high-speed gates cut off each pulse sharply before combining all pulses into one serial PAM train. Commands from the programmer to the high-speed gates connect the output of the high-level analog multiplexer to the input of the coder sample-and-hold circuitry.

2.9.4.3.3 Analog-to-Digital Converter. (See figure 2.9-8.)

Controlled by the programmer, the analog-to-digital converter (coder) receives analog high-level PAM inputs from the high-speed gates. The coder converts analog input data to digital form. Based upon commands from the programmer, the coder provides a digital output of eight-bit words to the digital multiplexer. (Refer to paragraph 2.9.4.3.6.) The coder converts the input voltages to an eight-bit binary code: zero volts is coded as binary 00000001 (1_{10}); 5 volts, as binary 11111110 (254_{10}). For each additional 19.7-millivolt input, the binary code is increased by binary 1, until the 5-volt level is obtained. Underscale voltages (less than zero) are represented as binary 00000000 (0); overscale voltages (more than 5 volts), as binary 11111111 (255_{10}). The sample-and-hold circuitry of the coder comprises an input buffer amplifier, a charging capacitor with gates, and an output buffer. The output buffer provides the voltage for driving the current-summing junction.

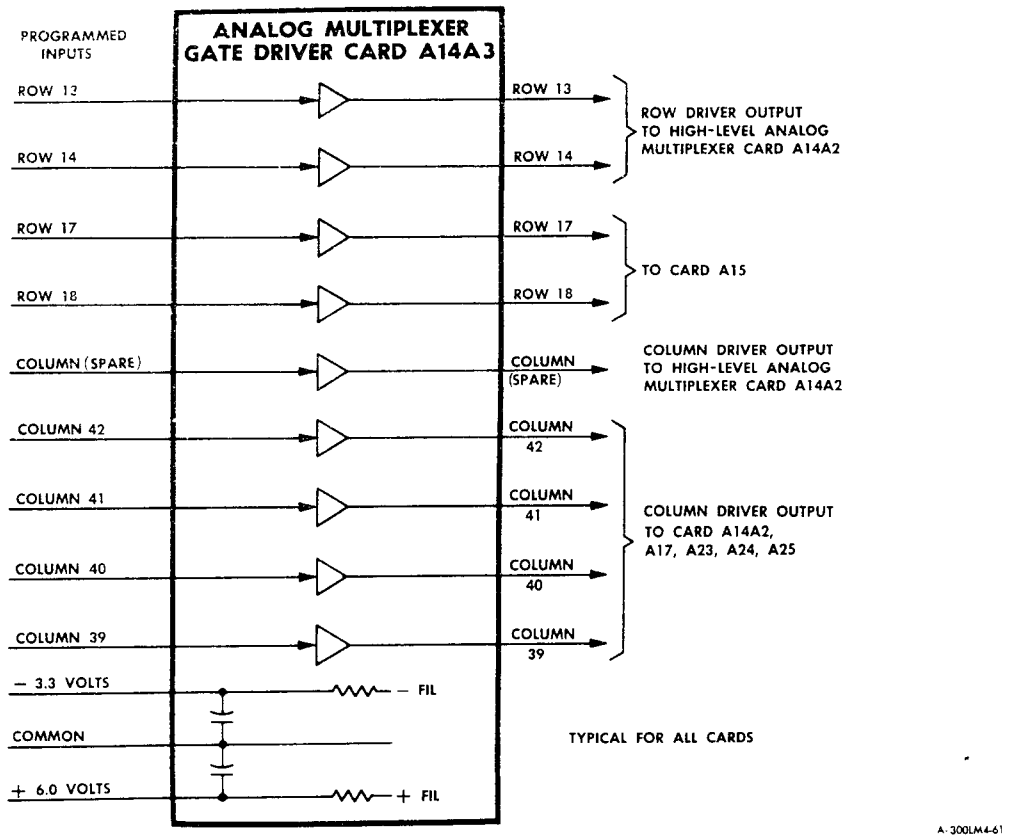

Figure 2.9-5. Typical Analog Multiplexer Driver Card - Simplified Logic Diagram

During a 39-microsecond sampling period, the capacitor is charged to the PAM analog input voltage from the high-speed gates. At the end of 39 microseconds, the sampling gate is disabled and the capacitor voltage appears at the output of the sample-and-hold output buffer. Sample-and-hold commands from the programmer, coincident with the buffer output, initiate successive approximation cycles. The timing generator is a counter that is matrix driven by an astable multivibrator that operates at approximately 100 kc. The generator provides eight sequential timing pulses to the coder. The pulses have separate inputs to the coder to provide timing for the weighted-current (WC) decisions sensed by the differential amplifier. At the beginning of each timing pulse, a differential query pulse is generated and routed to the differential amplifier gate.

Commands from the programmer reset all WC flip-flops, except the 128-bit flip-flop, to 0 state. The 128-bit flip-flop is set to a 1 state, providing a path through the 128-bit weighted-current gate (WCG) for the precision half-scale current input generated by the calibrated reference voltage. The PAM sample-and-hold output and the 128-bit WCG output are summed through their precision resistors and fed to the summing junction. If the resultant current at the junction is positive, the WC was less than the current produced by the PAM voltage. The differential amplifier senses the resultant positive current and applies an input to the differential amplifier gates. Query pulses are coincident with this input. For differential amplifier outputs that represent a resultant positive summing junction current, the query pulses set the differential amplifier flip-flop and provide a 1 output. This 1 output is coincident with timing pulse No. 1 at the input to the 128-bit AND gate. The 1 output from the AND gate is fed to the 128-bit flip-flop, which initially was set to a 1 state. The flip-flop is not reset: the 1 output (128-bit) is stored.

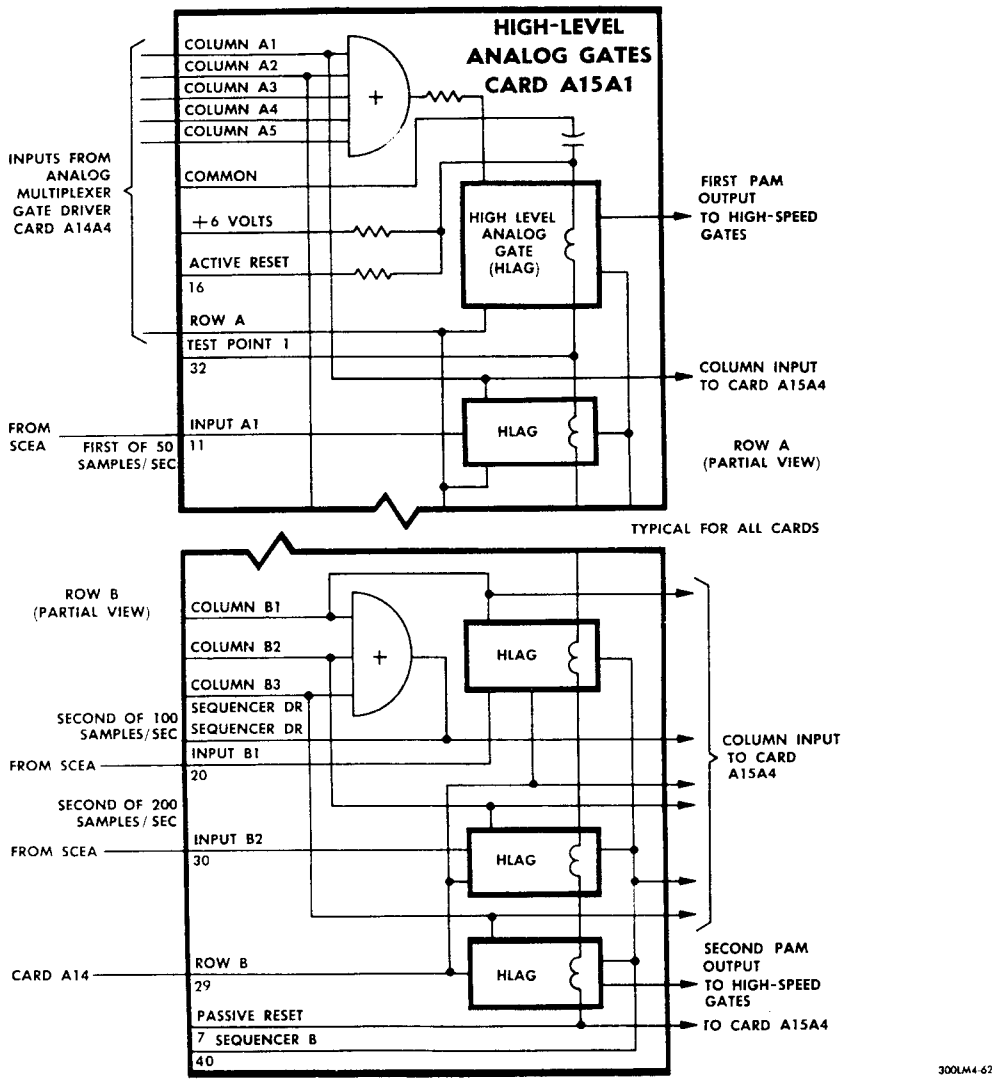

Figure 2.9-6. High-Level Analog Multiplexer Card - Simplified Logic Diagram

The timing pulse input fed to the 128-bit AND gate is also fed to the 64-bit WC flip-flop, setting the 64-bit WCG. Remaining 128-bit current (if any), the 64-bit current, and the PAM analog current are now summed at the summing junction. The differential amplifier again senses the resultant current and accepts or discards the 64-bit WCG output. Discarding occurs when the query pulse prevents the differential amplifier output from gating through to the differential amplifier flip-flop. This provides a zero input at the AND gates; there is no output to the digital multiplexer.

This process continues through timing pulse No. 8, at which time the least significant bit is stored and the WC flip-flops contain a parallel digital representation of a code word. The flip-flop outputs are strobed through digital multiplexer gates to the output register, to be converted to serial NRZ data.

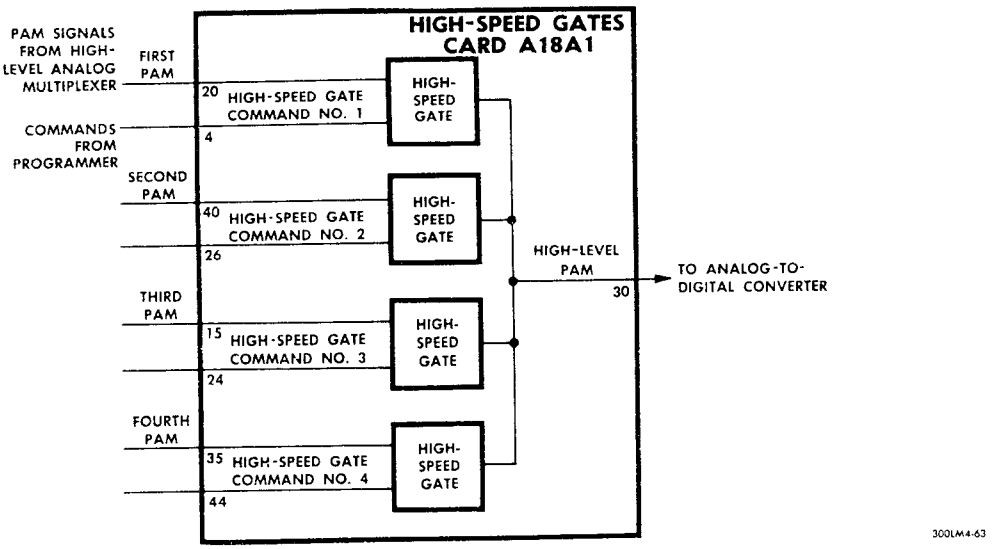

Figure 2.9-7. High-Speed Gates - Logic Diagram

2.9.4.3.4 Calibrator.

The calibrator produces two precision (0.18%) voltage outputs for system calibration. The desired outputs are 85% and 15% of 5 volts (4.25 and 0.750 volts, respectively). The precision voltages are obtained by tapping the desired potentials from a precision resistor network. The calibrator outputs may be supplied to the analog gates by external jumpers. The calibrator precision voltages are used in functional loop checks, to determine the operational status of the high-speed gates and the coder.

2.9.4.3.5 Programmer. (See figure 2.9-9.)

The programmer establishes the basic timing required for operation of the PCMTEA in the normal (51.2 kilobits per second) or reduced (1.6 kilobits per second) mode and controls sampling by the PCMTEA. To operate in the normal mode, the PCM TELEMETRY switch (panel 12) is set to HI. To operate in the reduced mode, the switch is set to LO. The LO position is used when the LM is not in line of sight with MSFN. In this case data are transmitted to the CSM and then relayed to MSFN. Additionally, the LO position is used when the LM is on the lunar surface. The programmer functions are as follows:

- Establishes the basic intervals for timing periods, bits, words, prime frames, and subframes
- Generates commands for analog and digital sampling in conformance with a fixed program
- Generates commands for coder operation and data transfer operations
- Generates patterns for sync and format identification (ID) words, and the commands for inserting these words into the output of the PCMTEA
- Generates commands and timing signals used to synchronize other LM equipment with the PCMTEA.

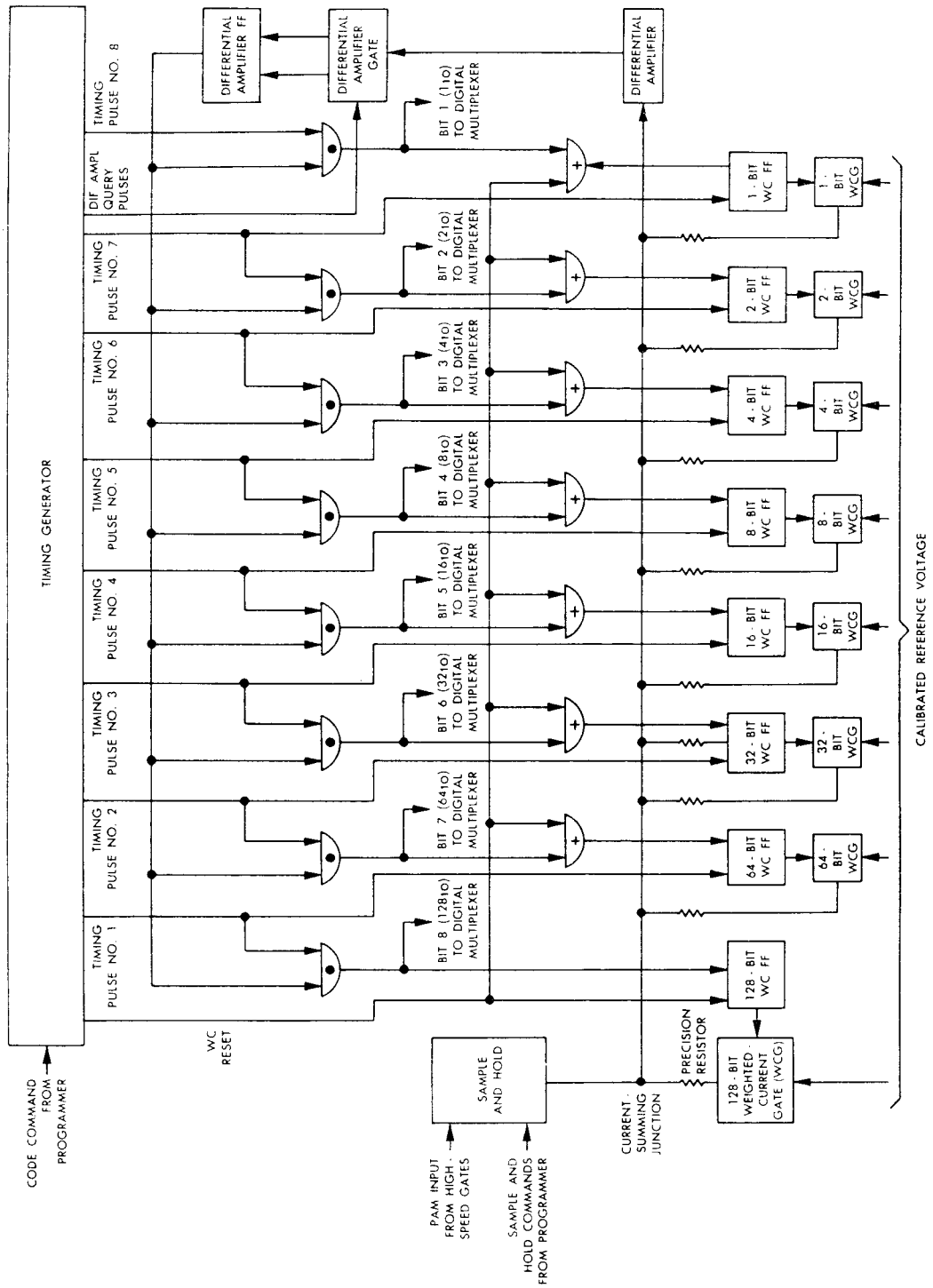

Figure 2.9-8. Analog-to-Digital Converter (Coder) - Simplified Logic Diagram

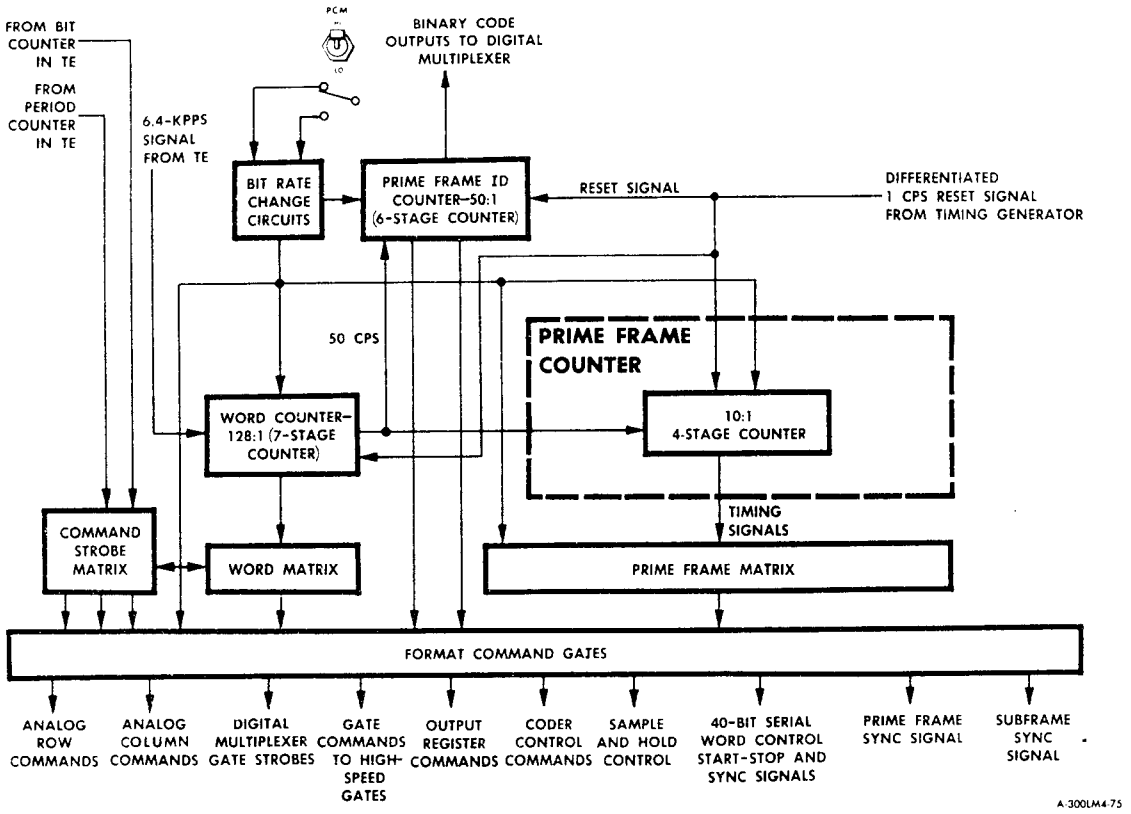

Figure 2.9-9. Programmer - Block Diagram

The programmer counter matrix is a flexible counter that provides submultiples of the basic 512-kpps clock input. The outputs are subsequently decoded to produce specific timing outputs. The counter logic consists of 17 bistable stages: seven stages are allotted for a word counter; six, for a 50-to-1 prime frame ID counter; and four, for a 10-to-1 prime frame counter. Each stage of the counter is designated by an F number. The prime frame ID counter produces the six binary numbers that identify the prime frames. The counter is cleared at the end of each subframe by the differentiated 1-cps input; it is then stepped through 50 binary states (000001 through 110010). The binary numbers are furnished to the digital multiplexer gates, for insertion into the PCMTEA data. During normal bit-rate operation, the binary numbers are inserted into word No. 4 of the data input. During reduced bit-rate operation, binary 000001 is inserted into word No. 4 of every frame.

Normal and reduced bit-rate ID control logic implements the switchover from normal to reduced bit-rate mode within the programmer. It also produces a command to a digital multiplexer gate, which causes the bit-rate format code to be inserted into the PCMTEA serial train during word No. 5 of prime frame No. 1. This is accomplished by sampling the output of the remotely located bit-rate selector switch and storing this information in two bistables controlled by AND gates. When the normal bit-rate mode is selected to replace the reduced bit-rate mode, the mode information is stored at reduced word No. 4. (See figures 2.9-3 and 2.9-4.) The normal bit-rate ID command is then generated during reduced word No. 1 and the format ID word is inserted into the PCMTEA data at the digital multiplexer gates. Likewise, when the reduced bit-rate mode is selected to replace the normal mode, the mode information is stored at prime frame No. 1, word No. 3. The reduced bit-rate ID command is

generated at normal bit-rate word No. 2, prime frame No. 1. Switchover from normal to reduced bit-rate mode can be accomplished only at the start of a subframe. Thus, if a change is made after prime frame No. 1, word No. 3, the remainder of the subframe operates at the normal rate. In the next subframe, the reduced bit-rate ID is inserted in the format and the subframe operates at the normal rate. Switchover occurs at the start of the next subframe.

2.9.4.3.6 Digital Multiplexer. (See figure 2.9-10.)

The first number in channel identification is the sampling rate of the channel. The following letter (A or D) signifies analog or digital data. Letter P, PE, S, or H signifies parallel, parallel event, serial, or high level data, respectively. The last number, letter, or combination thereof identifies the individual channel.

Based upon commands from the programmer, the digital multiplexer gates perform gating functions for digital inputs from the coder, programmer, time accumulator, and other LM equipment. Eight-bit binary words, resulting from the coding of the analog channel inputs, are received by the digital multiplexer gates from the coder. From the programmer, the digital multiplexer gates receive a 32-bit word (channel 50DP1) consisting of a 26-bit sync code and six bits of frame ID (frame number), and an eight-bit format (high-bit rate or low-bit rate) ID word (channel 1DP1). From the time accumulator, the digital multiplexer gates receive a 32-bit word for mission elapsed time (channel 10DP1). The digital multiplexer gates also receive multiple digital inputs from other LM equipment: sixty-two eight-bit words (channels 1DPE1 through 1DPE45, 1DP2 through 1DP10, 50DPE1 through 50DPE4, and 100DPE1 through 100DPE4) and one 16-bit word (channel 200DPE1). Each of these inputs is gated along with analog inputs, to the output register on a time-shared basis in the form of eight-bit words. Specific multiplexing of these inputs provides word outputs in a definite format. Measurement sampling rates and their recurrence are as follows:

Samples Per Second	Recurrence
1	Every 50th prime frame
10	Every fifth prime frame
50	Every prime frame
100	Twice every prime frame
200	Four times every prime frame

Measurements assigned one sample per second will appear every 50th prime frame 6,400 words apart or once per subframe. (See figure 2.9-3.) Measurements assigned 10 samples per second will appear every fifth prime frame, 640 words apart, or 10 times per subframe. If the measurement first appears in the first prime frame it will next appear in the sixth prime frame and each fifth prime frame thereafter. If the measurement first appears in the second prime frame, it will next appear in the seventh prime frame and each fifth prime frame thereafter. For 10-sample-per-second measurements, this repetition appears as follows:

Prime Frame in Which Measurement First Appears	1	2	3	4	5
Repeated frames	6	7	8	9	10
	11	12	13	14	15
	16	17	18	19	20
	21	22	23	24	25
	26	27	28	29	30
	31	32	33	34	35
	36	37	38	39	40
	41	42	43	44	45
	46	47	48	49	50
Total Samples Per Second	10	10	10	10	10

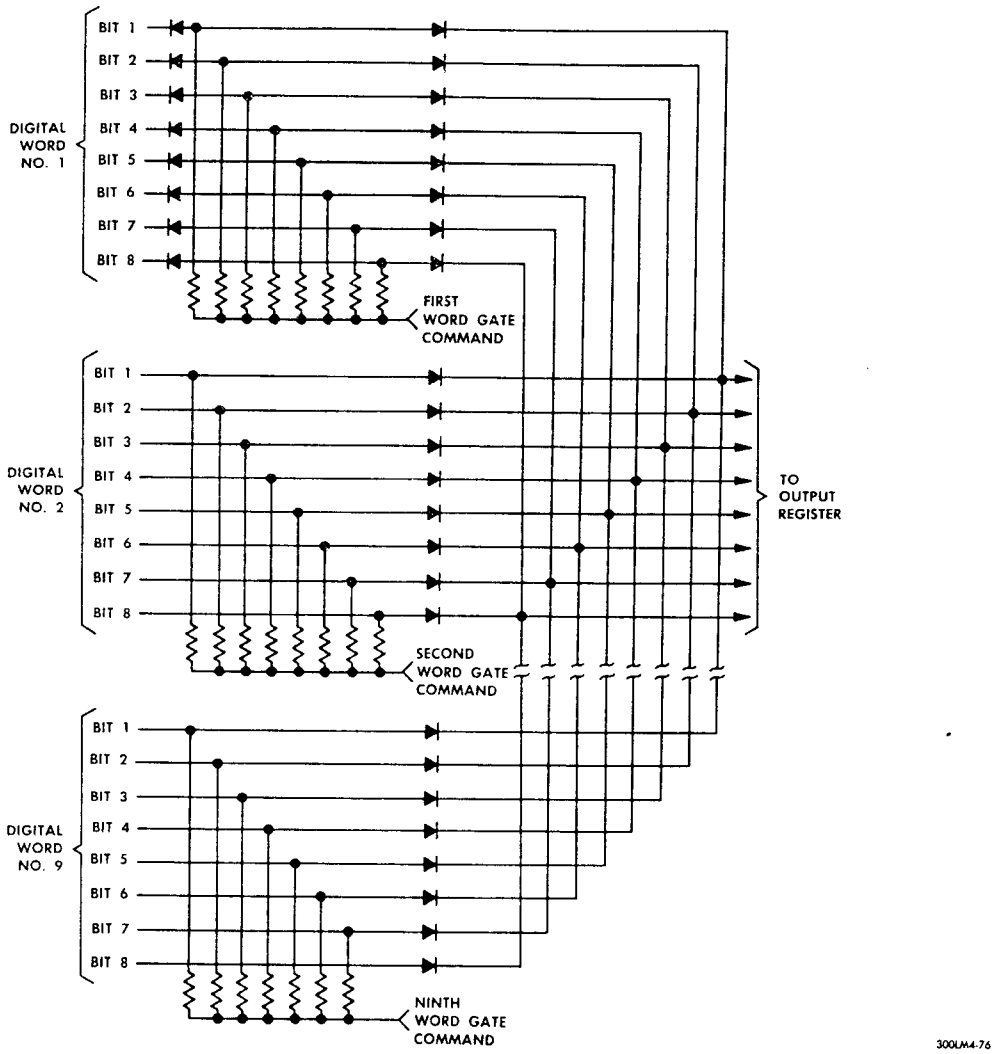

Figure 2.9-10. Digital Multiplexer - Logic Diagram

Measurements assigned 50 samples per second will appear once each prime frame, 128 words apart, or 50 times per subframe (1 second). Measurements assigned 100 samples per second will appear twice per prime frame, 64 words apart, or 100 times per subframe. Measurements assigned 200 samples per second will appear four times per prime frame, 32 words apart, or 200 times per subframe. When a digital input consists of more than eight bits, the eight most significant bits of the input word are gated to the output register first, then the eight next most significant bits.

Each digital multiplexer gating structure consists of nine eight-bit word gates. The binary-weighted outputs of these nine gates are OR-gated to eight output lines. Each word gate consists of eight AND structures (one for each bit of input), followed by an isolation diode that is junction OR-gated to the weighted output lines. Multiplexing of the word inputs is controlled by inputs from the programmer. When a word is to be gated to the output register, the eight-bit AND structure is strobed by a word command from the programmer. The input word configuration is transferred to the output register through the junction OR gates.

The gating structure used for each word gate consists of eight input diodes connected with the collector of a two-stage complementary gate driver and eight isolation diodes. Each junction is OR-gated with the same binary-weighted output of eight other word gates. The AND function is controlled by the gate driver output. During nonsampling time, each input diode is reverse biased by a negative voltage on the collector of the final stage of the driver. When data are to be gated to the output register, the gate driver is pulsed by a word command from the programmer. This saturates the gate driver, providing drive to set a 1 into each stage of the output register, corresponding to the digits of the digital word that are 1 (in excess of +3.5 volts) at the input. If a digit is 0 (less than +1.5 volts), the input diode is forward biased and the set current is inhibited.

2.9.4.3.7 Output Register and Data Transfer Buffers. (See figure 2.9-11.)

The output register receives eight-bit (parallel-by-bit) PCM words from the digital multiplexer gates and converts these data into serial PCM outputs. It also receives 40- and 24-bit serial binary inputs (channels 50DS1 and 50DS2) from other LM equipment and converts these data to PCM outputs. The data transfer buffers accept data from the output register, and inputs from the programmer and TE, to provide the following PCM output signals:

NRZ data
RZ data
Split-phase data
Data rate timing
Subframe sync
Two subcarrier reference signals
One 40-bit serial start
Two 40-bit serial stop
Two 40-bit serial sync
One 24-bit serial stop
One 24-bit serial sync.

The output register consists of an eight-stage shift register, a shift pulse driver, and serial data transfer gates. Eight-bit words (bits 1, 2, ... 8) are parallel loaded into the shift register from the digital multiplexer gates, on word command to the gates from the programmer. The word command is active during bit 8 of 8 of each word time that an analog or parallel digital input is sampled. Each binary 1 sets a stage of the shift register. Each stage of the shift register is a conventional, saturating bistable that uses an input driver and negative steering diodes. During the next word time, the word is shifted out at the bit rate, with the most significant bit (bit 8) shifted out first. This is accomplished by shift pulses developed by the shift pulse driver from a bit rate input furnished by the programmer. The final stage of the shift register drives the NRZ, RZ, and split-phase bistables.

The 40- and 24-bit serial words are also processed by the shift register. These serial words are transferred synchronously from other LM equipment by start, stop, and bit sync pulses furnished by the PCM equipment. Each bit of the words is AND-gated with the word command from the programmer, at the serial data transfer gates and furnished as an input to the eighth stage of the shift register. Each bit is subsequently entered into this stage and shifted out by the shift pulse as serial PCM data. The 50DS1 and 50DS2 inputs are inserted in words No. 121 through 128 of each prime frame during operation in the normal bit-rate mode. When operating in the reduced bit-rate mode, channels 50DS1 and 50DS2 are not sampled.

The data transfer buffers supply a start pulse one bit time before the beginning of the serial digital readout, 40-bit sync pulses (one each read time), and a stop pulse one bit time after readout of the 40th bit.

2.9.4.3.8 Power Supply.

The PCMTEA power supply (double-thickness card) is a dc-to-dc converter. It converts a +28-volt input to highly regulated outputs for the PCM analog blocks (+20, -20, +10, -10, and +6.3 volts) and the PCM digital blocks (+10, +6, +3.3, and -3.3 volts). The power supply also fulfills the power requirements of the TE.

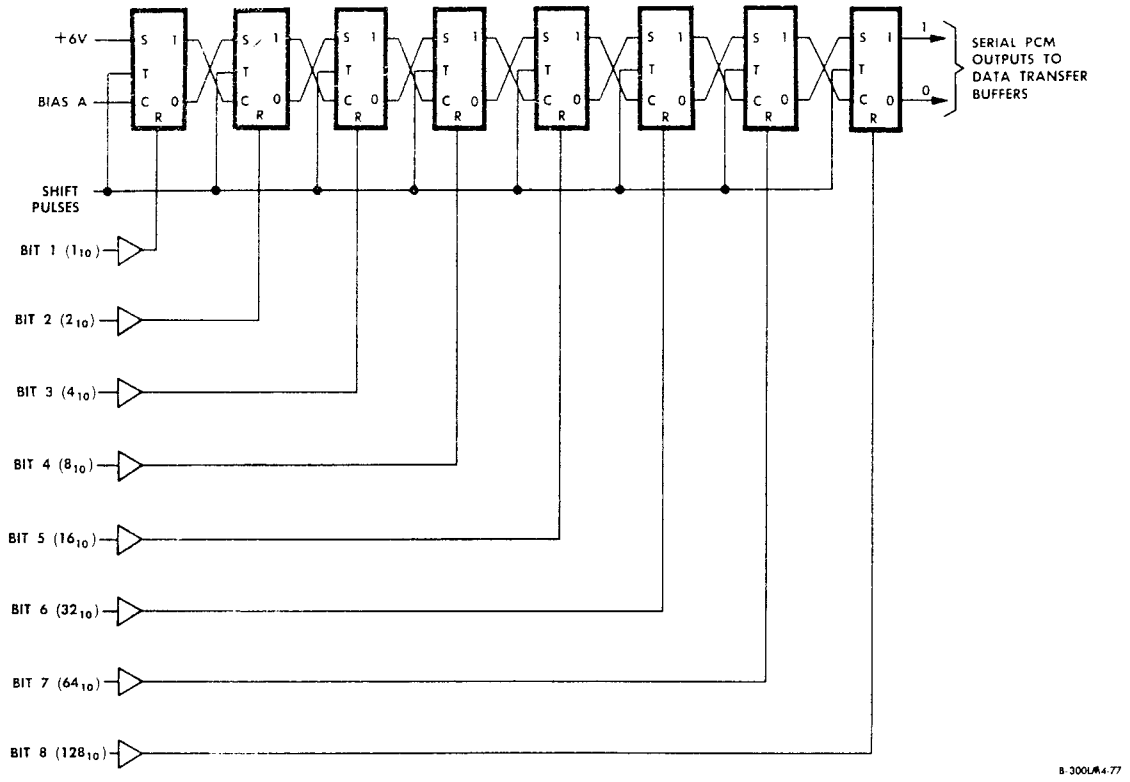

Figure 2.9-11. Output Register

2.9.4.3.9 Phase-Locked Oscillator and Doublers. (See figure 2.9-12.)

A 1,024-kpps signal from the LGC is routed to the TE doubler circuits through two parallel paths (primary and secondary). In the secondary path, a 2,048-kpps signal (doubler circuit output) controls the phase-locked oscillator. This temperature-compensated quartz crystal oscillator continues to operate and drive the timing generator if the 1,024-kpps input from the LGC fails. Additionally, if the Schmitt trigger D output in the primary path fails to drive the timing generator, the phase-locked oscillator provides the redundancy needed for the timing generator to produce synchronizing signals for PCM outputs and other LM subsystems.

2.9.4.3.10 Oscillator Failure-Detection Circuits No. 1, 2, and 3.

Three failure-detection circuits in the TE monitor the status of the phase-locked oscillator in the secondary path. Failure-detection circuit No. 1 monitors the output of the phase-locked oscillator's buffer and provides a digital status signal to the digital multiplexer in the PCMTEA. Failure-detection circuits No. 2 and 3 monitor the 1024-kpps signal from the LGC and the output of the phase-locked oscillator in the secondary path, and provide an analog status signal to the high-level multiplexer in the PCMTEA. If either signal fails, MSFN is cautioned that the TE synchronization output signals to the PCM and other LM subsystems are only being supplied through the primary path to the timing generator or by an unsynchronized phase-locked oscillator in the secondary path.

2.9.4.3.11 Decision Network. (See figure 2.9-12.)

The decision network is triredundant; it receives inputs from the parallel primary and secondary paths in the TE. The primary input from Schmitt trigger D reaches the decision network before the input from the phase-locked oscillator. The triredundant circuit allows the phase-locked oscillator to continue driving the timing generator if the primary input from Schmitt trigger D does not appear at the decision network input. Schmitt triggers A, B, and C simultaneously route outputs from the network to drive the timing generator ripple counters. For the timing generator to continuously provide synchronizing pulses, two of the three Schmitt trigger outputs (A, B, and C) are necessary.

2.9.4.3.12 Timing Generator. (See figure 2.9-12.)

The timing generator consists of triredundant majority voting logic that divides the 2,048 kpps inputs from the decision network into 512-kpps signal for the CS. The timing generator also divides the 512-kpps signal down to 1 pps. The redundant counters provide outputs at 512, 6.4, and 1.6 kpps; 10 pps; and 1 pps through the PCM and TE transfer buffers for other LM subsystems and displays. All division is done by integrated circuit bistables. The redundant outputs from each counter are fed to AND gates. If one of the three outputs from the counters to the AND gates fails, the AND-gate arrangement provides a continuous output from the two other counters.

2.9.4.3.13 Time Accumulator and Serial Time Code Generator. (See figure 2.9-12.)

The time accumulator is a nonredundant device that comprises integrated circuitry that accepts the 1-pps signal from the redundant counters in the timing generator and divides it into binary-coded-decimal (BCD) outputs (seconds, minutes, hours, and days). Total recycling occurs at 39 days. An automatic reset circuit resets the time accumulator when power is initially applied to the PCMTEA. The BCD outputs are fed, in parallel, to the serial time code generator as a 26-bit time code signal. The 26 bits represent mission elapsed time. The generator output (100 bits per second in NRZ-C format) is routed, with the most significant bit first, to the DSEA for time correlation of recorded voice. The first 24 bits are a synchronization code; the following 26 bits represent mission elapsed time.

2.9.4.4 Caution and Warning Electronics Assembly. (See figure 2.9-13.)

The CWEA provides the astronauts and MSFN with a continuous rapid check of LM status during manned missions. By continuously monitoring the data supplied by the SCEA, malfunctions are immediately detected. When a malfunction is detected, the CWEA provides signals that light caution lights (panel 2), warning lights (panel 1), component caution lights, and MASTER ALARM pushbutton/lights (one each on panel 1 and 2). A malfunction also activates a 3-kc signal that provides a tone in the astronaut headsets, and supplies the PCMTEA with a telemetry signal. The warning lights (red) indicate malfunctions that jeopardize astronaut safety and require immediate action. The caution lights (yellow) indicate malfunctions that do not necessarily require immediate action.

The CWEA compares analog signals (between 0 and 5 volts dc) from the SCEA with preselected internally generated limits supplied by the caution and warning power supply as reference voltage. In addition to the analog inputs, the CWEA receives discrete on-off and contact closure signals. All inputs are applied to detectors (analog and discrete) in the CWEA. The detected signal is routed through logic circuitry, enabling the necessary relay contacts for the caution or warning lights. Simultaneously, the signal is routed to a master flip-flop that energizes a master relay driver, enabling relay contacts. These relay contacts route the signal to light the MASTER ALARM pushbutton/lights and provide the 3-kc tone to the astronaut headsets. Pressing either MASTER ALARM pushbutton/light extinguishes both lights and terminates the tone, but has no effect on the caution or warning lights. The MASTER ALARM pushbutton/lights are not resettable when the C/W PWR caution light goes on.

The CWEA channel detector logic also receives automatic reset signals from the power supply assembly, and manual caution and manual warning reset signals from LM subsystems. The thrust chamber assembly (TCA) logic accepts command input signals that correspond to TCA operation. Automatic reset signals from the power supply assembly and reset signals from LM subsystems are accepted by the TCA logic. TCA outputs are routed simultaneously to a warning relay driver and a talkback relay driver, which operate the RCS TCA warning light and a particular QUAD talkback, depending on the quadrant in which the TCA (system A or B) failed. The master flip-flop monitors the output of all caution and

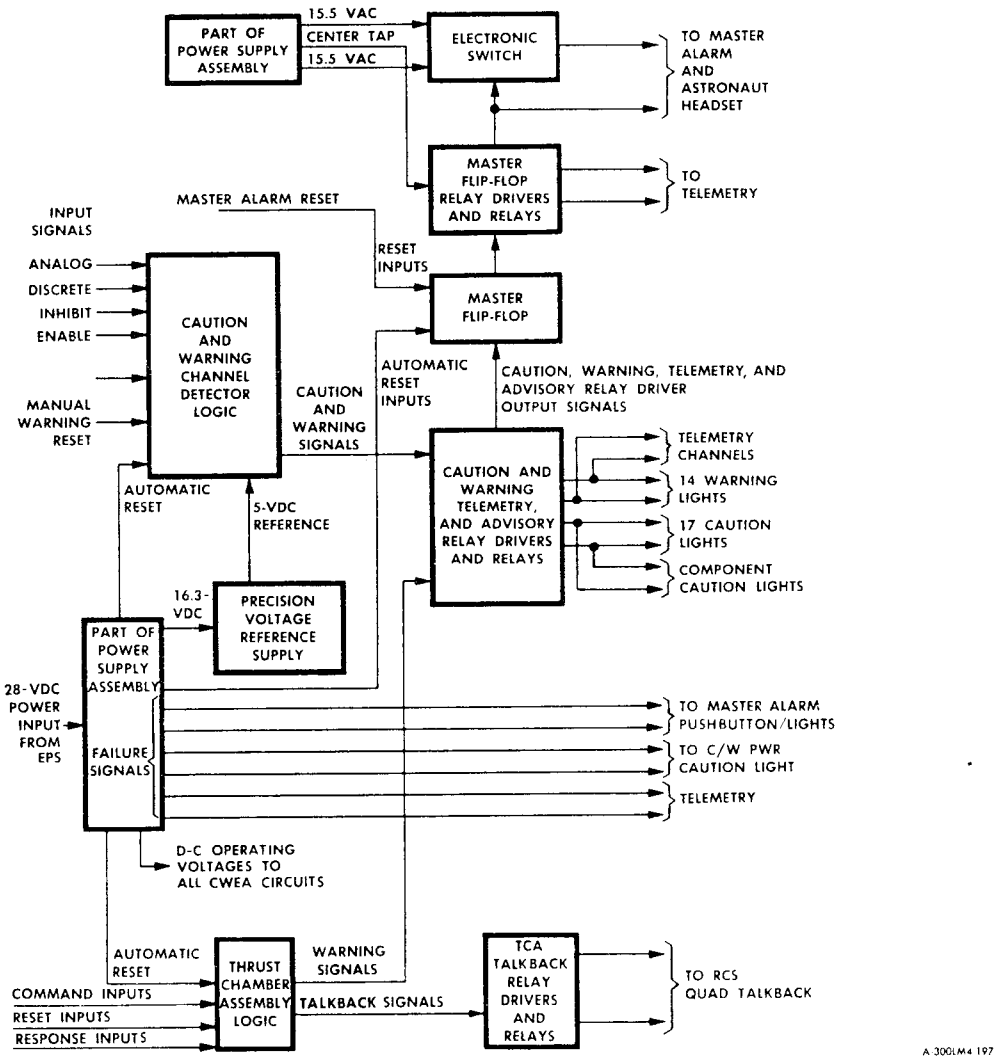

Figure 2.9-13. CWEA - Functional Block Diagram

warning relay drivers. When one of these relay drivers is energized, the master flip-flop energizes master relay drivers. These drivers operate relays whose contacts provide a path to actuate an electronic switch and a telemetry channel. When the electronic switch contacts close, a signal is routed to light both MASTER ALARM lights. Resetting the MASTER ALARM pushbutton/lights does not affect a caution, warning, telemetry, component caution lights, or talkbacks. These malfunction indications remain until the cause is eliminated or until the appropriate reset or inhibit signal is applied. The telemetry channel provides MSFN with the malfunction indication. The power supply assembly not only provides operating voltages for the CWEA; it has automatic reset and failure-detection circuits. The automatic reset circuits operate when power is turned on; they reset the master flip-flop and all resettable CWEA logic circuits. Power supply failure is sensed by the failure-detection circuit, which operates relays that cause the MASTER ALARM pushbutton/lights and the C/W PWR caution light to go

on and close a telemetry channel. The 16.3-volt d-c output of the power supply assembly provides a regulated voltage to a precision voltage reference supply. This supply provides a precise zener voltage reference for comparing input signal voltages in the CWEA channel detector logic circuits.

Individual caution and warning light logic circuits (figure 2.9-15) are discussed in the following paragraphs. Figure 2.9-15 shows input functions, SCEA, and CWEA logic elements, and output data involved in routing a malfunction signal to a caution or warning light. SCEA interfacing of signals is discussed in detail in paragraph 2.9.4.2. In all cases the output of the CWEA enables a relay driver which energizes a relay, and the closed contacts of this relay cause the caution or warning light to go on. To avoid repetition this operation is not described for each light. Failure modes detected by the CWEA, malfunction limits, and inhibit, enable, and reset signals discussed in the following paragraphs are summarized in table 2.9-3. In the "Light (Telemetry Code No.)" column of the table, the letter "C" denotes a caution light, the letter "W" a warning light.

2.9.4.4.1 MASTER ALARM Pushbutton/Lights and C/W PWR Caution Light. (See figure 2.9-14.)

The C/W PWR caution light goes on if any one or a combination of the regulated voltages (+23, +9, +4, -3 volts dc) or the 10 kc chopper driver voltage generated by the CWEA power supply fails. The CWEA power supply receives 28 volts dc from the LM Pilot's bus through the INST: CWEA circuit breaker (panel 16) and provides regulated voltages for the CWEA logic circuits and the precision voltage-regulated supply (PVRS). The PVRS supplies a highly regulated reference voltage to the CWEA comparators, where inputs from various subsystems are compared for the correct operating voltage. Power supply outputs are sent to level detectors; the output of these detectors is applied to a NAND gate. Normally, when all voltages are present the NAND gate is enabled and the output of the gate is at ground, energizing the coil of relays K5, K6, and K7. The relay contacts open the ground path for the C/W PWR caution light and the MASTER ALARM light causing them to go off. If a low-voltage condition occurs on any power supply output or an overvoltage condition on the +9-volt output, the NAND gate is disabled, deenergizing K5, K6, and K7. Deenergizing these relays causes their contacts to close. Contacts of K7 provide a ground to light the C/W PWR caution light; contacts of K5, K6, and K7 provide a ground to light the MASTER ALARM pushbutton/lights.

Ground for the MASTER ALARM pushbutton/lights is also supplied if a LM subsystem malfunction is sensed by the CWEA master flip-flops. These flip-flops route the signal to master relays K1, K2, and K3. Contacts of these relays, connected to the same circuit as those of relays K5, K6, and K7, provide a primary ground path to light the MASTER ALARM pushbutton/lights. The LM Pilot's bus voltage used for the pushbutton/lights and the ground provided when a malfunction signal is generated are also routed to the tone generator in the S&C control assembly. The tone generator routes a 3-kc tone to the astronaut headsets. Except if the C/W PWR caution light is on, the MASTER ALARM pushbutton/lights are resettable. Pressing either pushbutton/light resets the master flip-flops and deenergizes the master relays. This interrupts the ground path, extinguishes both pushbutton/lights, and terminates the 3-kc tone, but has no effect on the caution or warning light. If the C/W PWR caution light is on, its relays provide a redundant ground path for the pushbutton/lights. Pressing either pushbutton/light resets the master relays and interrupts its ground. The redundant ground provided by the C/W PWR caution light relays maintain the MASTER ALARM pushbutton/lights on.

2.9.4.4.2 CABIN Warning Light. (See A, figure 2.9-15.)

The CABIN warning light goes on to indicate a loss of cabin oxygen pressure due to a malfunction. If cabin pressure drops below 4.15 psia, a solenoid in the ECS opens the emergency oxygen valve, sending a signal to a discrete voltage detector in the CWEA. The detector output enables an AND gate causing the CABIN warning light to go on. When cabin pressure exceeds 4.45 psia, the emergency oxygen valve closes, removing the signal to the CWEA and causing the light to go off.

During the egress mode, setting the CABIN REPRESS valve on the ECS module to MANUAL causes the emergency oxygen open valve-position-indicator switch to send an inhibit signal to the CWEA. This signal is inverted, disabling the AND gate, and thereby inhibiting the light.

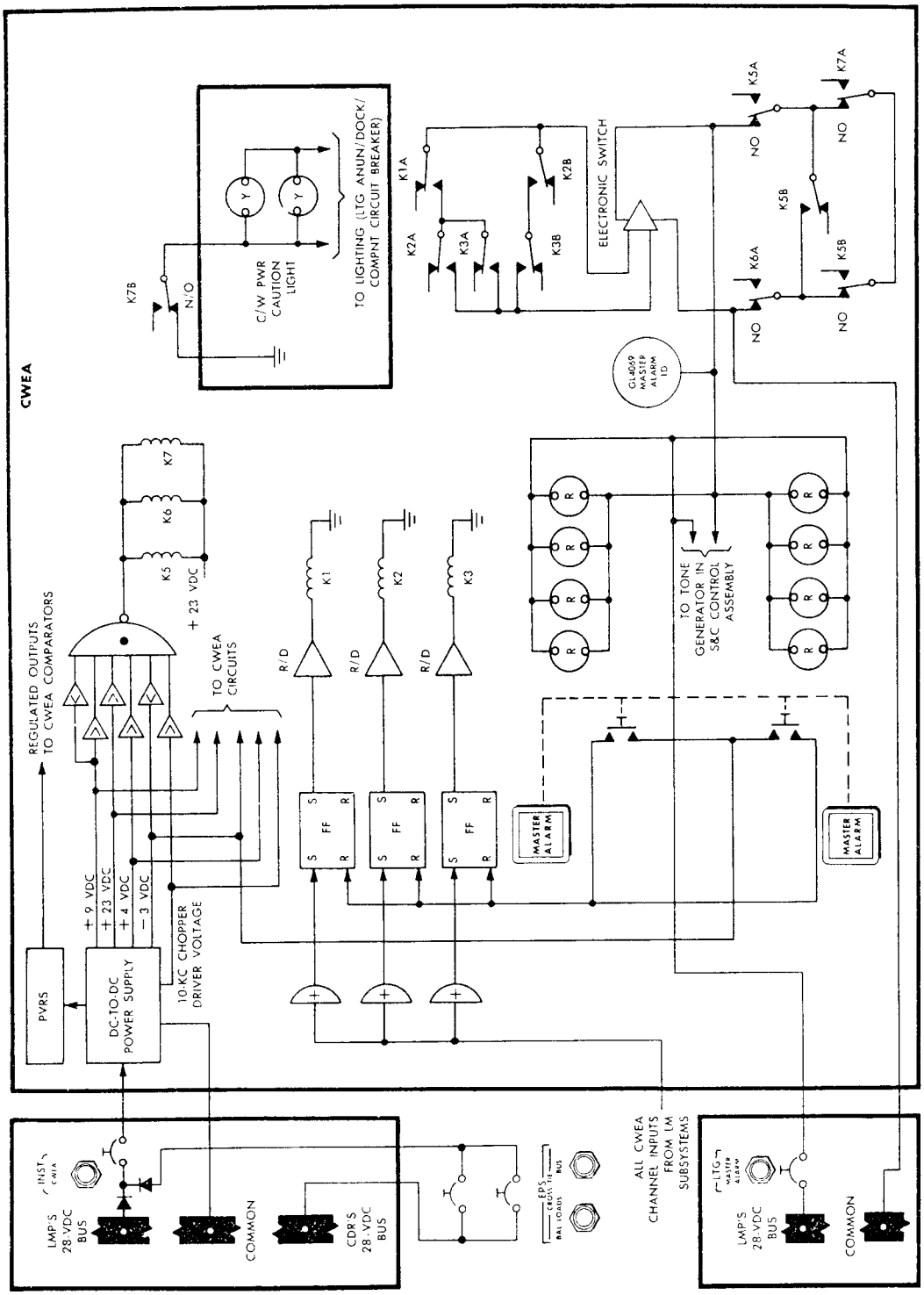

Figure 2.9-14. Master Alarm Pushbutton/Lights and C/W PWR Caution Light - Simplified Logic Diagram

2.9.4.4.3 ECS Caution Light. (See B, figure 2.9-15.)

The ECS caution light goes on to indicate a glycol pump No. 2 failure, suit fan No. 1 failure, excessive CO_2 partial pressure, or a water separator No. 1 or 2 failure.

If glycol pump No. 1 fails, the GLYCOL component caution light (panel 2) goes on and pump No. 2 is selected. If pump No. 2 malfunctions a low-pressure sensor in the coolant recirculation assembly sends a signal to a discrete voltage detector in the CWEA. The output of this detector enables an OR gate which causes the ECS caution light to go on. The ECS caution light goes off when normal coolant pressure is restored.

If suit fan No. 1 malfunctions, a low-pressure sensor in the ECS suit fan assembly sends a signal to a discrete voltage detector in the CWEA, enabling the OR gate and causing the ECS caution light to go on. The SUIT FAN component caution light (panel 2) also goes on at this time. Setting the SUIT FAN selector switch (panel 2) to 2 selects suit fan No. 2 (backup mode) and causes the ECS caution light and SUIT FAN component caution light to go off.

If CO_2 partial pressure exceeds approximately 7.6 mm Hg (refer to calibration curve in B, figure 2.9-15 for specific value) a sensor signal greater than 2.274 volts dc is detected by a CWEA comparator. The comparator output enables the OR gate, causing the ECS caution light to go on. The comparator output is also routed to the CO_2 component caution light (panel 2) causing it to go on. The increase in CO_2 partial pressure is monitored on the PART PRESS CO_2 indicator (panel 2). The ECS caution light and CO_2 component caution light go off when nominal CO_2 partial pressure is restored. Setting the CO_2 CANISTER SEL valve on the ECS module to SEC selects the backup mode. The primary CO_2 cartridge can now be replaced and the CO_2 CANISTER SEL valve returned to the PRIM position. Monitoring the PART PRESS CO_2 indicator ensures that CO_2 partial pressure is restored.

If the operating water separator malfunctions, a low rpm signal, indicating less than 792.5 rpm (refer to calibration chart in B, figure 2.9-15 for specific value) is detected by a comparator in the CWEA. The comparator output enables the OR gate causing the ECS caution light to go on. The comparator output is also routed to the H_2O SEP component caution light (panel 2) causing it to go on. The lights go off when nominal water separator speed is restored. If separator No. 1 fails, separator No. 2 can be selected by pulling the WATER SEP SEL valve handle on the ECS module.

■ 2.9.4.4.4 Deleted

2.9.4.4.5 GLYCOL Caution Light. (See D, figure 2.9-15.)

The GLYCOL caution light goes on to indicate low coolant quantity in the primary coolant loop or high coolant temperature, sensed at the heat transport section sublimator outlet, in the primary coolant loop. If only 10% of coolant remains in the coolant accumulator a low-level sensor sends a signal to a discrete voltage detector in the CWEA, which enables the OR gate. If coolant temperature exceeds +49.98° F, a comparator in the CWEA also enables the OR gate. The OR-gate output is applied to an AND gate enabled by an inverted output from the GLYCOL switch (panel 2), causing the GLYCOL caution light to go on. Coolant temperature may be monitored on the GLYCOL temperature indicator (panel 2). Setting the GLYCOL switch to INST (SEC) inhibits the AND gate and causes the light to go off.

2.9.4.4.6 O_2 QTY Caution Light. (See E, figure 2.9-15.)

The O_2 QTY caution light goes on, before staging, to indicate a low-quantity condition (less than approximately 5%) in the descent oxygen tank or a less-than-full condition (less than approximately 80%) in either ascent oxygen tank. After staging, the O_2 QTY caution light goes on to indicate a low-quantity condition (less than approximately 10%) in ascent oxygen tank No. 1. To determine which tank is low, the O_2/H_2O QTY MON selector switch (panel 2) is cycled through all positions and the corresponding quantity is monitored on the O_2 QUANTITY indicator (panel 2).

If descent oxygen tank pressure drops below 135.0 psia, a CWEA comparator sets a flip-flop. In the same manner, ascent oxygen tank No. 1 pressure less than 681.6 psia or ascent oxygen tank No. 2 pressure less than 682.4 psia sets a flip-flop through an OR gate. Either flip-flop in a set condition enables an OR gate whose output is applied to an AND gate, which is enabled by the normally closed contacts of the staging deadface relay. When enabled, the output of this AND gate is applied through an output OR gate to the O_2 QTY caution light, causing it to go on. Separation of the ascent and descent stages opens the staging deadface relay contacts, disabling the AND gate and causing the light to go off. If, after staging, the ascent oxygen tank No. 1 pressure drops below 99.60 psia, a CWEA comparator sets a flip-flop. The output of the flip-flop is applied to the O_2 QTY caution light through the output OR gate, causing the light to go on.

In all cases, the light can be turned off by setting the O_2/H_2O QTY MON selector switch to C/W RESET. This applies a signal to the reset side of each flip-flop, resetting it. If the descent tank malfunctions, the #1 ASC O_2 (ascent tank No. 1) valve on the ECS module must be opened. The O_2 QUANTITY indicator is monitored for this tank by setting the O_2/H_2O QTY MON selector switch to ASC 1. If ascent tank No. 1 indicates a low quantity, the #2 ASC O_2 (ascent oxygen tank No. 2) valve on the ECS module must be opened.

2.9.4.4.7 SUIT/FAN Warning Light. (See F, figure 2.9-15.)

The SUIT/FAN warning light goes on to indicate a lack of suit pressure or a suit fan malfunction. Suit pressure is circulated by one of two fans. If fan No. 1 malfunctions, the astronaut switches to fan No. 2. If fan No. 2 also malfunctions a signal is sent to a discrete voltage detector in the CWEA. The detector output enables an OR gate, causing the SUIT/FAN warning light to go on. The SUIT/FAN warning light also goes on if suit pressure drops below 3.11 psia. This condition, detected by a CWEA comparator, enables the OR gate and causes the SUIT/FAN warning light to go on. In addition, a signal from the comparator energizes a CWEA relay, which energizes a relay of the torn suit protection circuit. These contacts close the suit isolation valves, isolating the individual oxygen loops. Microswitches on the valves close, routing ground signals through the CABIN PRESS switch to energize the cabin repressurization valve. Suit pressure may be read on the SUIT PRESS indicator (panel 2).

Restoring suit pressure to 3.11 psia or more causes the light to go off if the suit fans are operative. If the light is on due to a faulty suit fan, opening the ECS: SUIT FAN ΔP circuit breaker (panel 16) causes it to go off.

2.9.4.4.8 RCS A REG and RCS B REG Warning Lights. (See G, figure 2.9-15.)

The RCS A REG warning light goes on to indicate a high- or low-pressure condition in the helium line of the RCS. If helium pressure exceeds 218.8 psia or drops below 164.4 psia, the

malfunction is detected by a high- or low-level comparator in the CWEA. The comparator output is applied to an AND gate through an OR gate, enabling the AND gate and causing the RCS A REG warning light to go on. Helium regulator pressure for system A may be monitored on the A PRESS indicator (panel 2).

In the event of a malfunction, the defective system can be shut down by setting the MAIN SOV SYS A switch (panel 2) to CLOSE. This closes the main shutoff solenoid valves of system A, sending an inhibit signal to the AND gate in the CWEA and causing the light to go off. The closed-valve condition is indicated by the MAIN SOV SYS A talkback (panel 2).

The logic and operation of the RCS B REG warning light (for system B) are identical with that for the RCS A REG warning light (for system A).

2.9.4.4.9 RCS Caution Light. (See H, figure 2.9-15.)

The RCS caution light goes on when RCS helium tank pressure (system A or B) drops below 1696 psia. Low-pressure signals are routed from pressure transducers at the helium tank of each system to low-level comparators in the CWEA. Detection of a low-pressure condition by a comparator sets a flip-flop. The output of the flip-flop enables an OR gate, causing the RCS caution light to go on. Setting the TEMP/PRESS MON selector switch (panel 2) to He resets both flip-flops, disabling the OR gate and causing the light to go off. Helium tank pressure may be monitored on the A PRESS or B PRESS indicators (panel 2). In the event of a malfunction, the remedial action is either to use the ascent interconnect (during ascent burn) or the crossfeed (before ascent pressurization).

2.9.4.4.10 ENG GMBL Caution Light. (See I, figure 2.9-15.)

The ENG GMBL caution light goes on during descent engine operation if a difference between the gimbal drive signal and the gimbal response signal from the Y- or Z-axis gimbal drive actuators, is sensed. The pitch (Y) and roll (Z) trim malfunction signals are detected by discrete voltage detectors in the CWEA. The output of either detector enables an OR gate, causing the ENG GMBL caution light to go on. The RCS duty cycle (propellant quantity depletion rate) may be monitored on the A and B QUANTITY indicators (panel 2) to determine the extent that the center of gravity and trim are off.

2.9.4.4.11 HEATER Caution Light. (See J, figure 2.9-15.)

The HEATER caution light goes on to indicate an out-of-tolerance temperature condition in the S-band steerable antenna assembly or the rendezvous radar antenna assembly. Detection of an out-of-tolerance condition signal by a high- or low-level comparator in the CWEA enables an OR gate, the output of which sets a flip-flop. When set, the flip-flop enables the output OR gate, causing the HEATER caution light to go on. The out-of-tolerance temperatures that cause the HEATER light to go on are as follows:

S-band steerable antenna assembly - less than -64.1° F or greater than +153.7° F

Rendezvous radar antenna assembly - less than -50.48° F or greater than +148.9° F

To determine which heater malfunctioned, the TEMP MONITOR selector switch (panel 3) is cycled to RNDZ and S-BAND, and the corresponding temperature is monitored on the TEMP indicator (panel 3). When the TEMP MONITOR selector switch is set to the affected heater position, the flip-flop in the CWEA is reset, causing the light to go off. High-temperature conditions are eliminated when the affected heater assembly circuit breaker (HEATERS: S-BD ANT on panel 16, HEATERS: RNDZ RDR on panel 11) is opened.

2.9.4.4.12 RCS TCA Warning Light. (See K, figure 2.9-15.)

The RCS TCA warning light goes on if there are repeated short commands or an extended command to fire a specific thruster, but no chamber pressure response at that thruster, or if opposing collinear jets are commanded on simultaneously. The logic shown in figure 2.9-15 illustrates failure detection for the A4D and A4R jet driver pair and is typical for the other seven jet driver pairs.

Jet driver commands are routed to a discrete voltage detector in the CWEA. The detector output enables an AND gate if the SYSTEM A QUAD 4 switch is set to OPEN. The AND gate output is routed to a three-input AND gate for detecting on failures, a counter for detecting off failures resulting from repeated short commands with no response, and an AND gate associated with a pulse width discriminator (PWD) used to detect off failures resulting from an extended command with no response. If either of the three logic elements (AND gate, counter, or PWD) is enabled, the output enables an OR gate that sets a flip-flop. The output of the set flip-flop enables an OR gate, causing the RCS TCA warning light to go on. The flip-flop output is also routed to a QUAD talkback (SYSTEM A QUAD 4 talkback, in the case of A4D and A4R failures). Setting the SYSTEM A QUAD 4 switch to CLOSE resets the flip-flops and counters, inhibits the command input AND gate, and causes the RCS TCA warning light to go off.

An on failure is a thrusting condition without the presence of an on command from the LGC. This condition is caused by a malfunction of the command signal sources upstream of the TCA's or by a short circuit within the TCA valves. Uncorrected, this condition results in excessive propellant consumption. Opposing collinear TCA's are not fired simultaneously unless it is necessary to compensate for the effect of a failed-on TCA. The AND gate senses this failure and causes the RCS TCA warning light to go on.

TCA's may not respond to all individual command signals if they are of short duration (less than 80±8 milliseconds). Pulse skipping is not critical until six consecutive short pulses do not produce a thrust response signal (off failure). After six pulses without a response, the next command pulse (even if accompanied by a response) enables the counter and causes the RCS TCA warning light to go on. If one long pulse (in excess of 80±8 milliseconds) is skipped and a thrust response signal is not produced, the input to the PWD is not inhibited; the PWD is enabled, causing the RCS TCA warning light to go on.

2.9.4.4.13 DC BUS Warning Light. (See L, figure 2.9-15.)

The DC BUS warning light goes on to indicate a low-voltage condition (less than 26.5 volts) on the Commander's or LM Pilot's d-c bus. Conditioned signals representing d-c bus voltages are routed to low-level comparators in the CWEA. Detection of an out-of-tolerance voltage condition by a comparator enables an OR gate, causing the DC BUS warning light to go on. Bus voltages may be monitored on the VOLTS indicator (panel 14) by setting the POWER/TEMP MON selector switch (panel 14) to the CDR BUS or SE BUS (LM Pilot's bus). The light goes off when nominal voltage conditions are restored.

2.9.4.4.14 INVERTER Caution Light. (See M, figure 2.9-15.)

The INVERTER caution light goes on if the a-c bus voltage is less than 112.0 volts or if the a-c bus frequency is less than 398.0 cps or more than 402.0 cps. Conditioned signals representing a-c bus voltage and frequency are routed to CWEA comparators. Detection of an out-of-tolerance condition by a comparator enables an OR gate. The OR gate output enables an AND gate, causing the INVERTER caution light to go on. Setting the INVERTER switch (panel 14) to OFF thereby inhibiting the AND gate in the CWEA, or restoration of a within-tolerance condition causes the light to go off. Setting the INVERTER switch to 1 selects inverter No. 1 (backup mode). Voltage on the a-c bus may be monitored on the VOLTS indicator (panel 14) by setting the POWER/TEMP MON selector switch (panel 14) to AC BUS.

2.9.4.4.15 BATTERY Caution Light. (See N, figure 2.9-15.)

The BATTERY caution light goes on to indicate an overcurrent, reverse-current, or overtemperature condition in any of the two ascent or five descent batteries. If a malfunction occurs, a failure signal is sent to a discrete voltage detector in the CWEA. The output of any detector enables an OR gate, causing the BATTERY caution light to go on. To determine which battery malfunctioned the BAT FAULT component caution light must be monitored as the POWER/TEMP MON selector switch (panel 14) is cycled from BAT 1 through BAT 6. The component caution light goes on when the POWER/TEMP MON switch is set to the affected battery position. The BATTERY caution light goes off when nominal conditions are restored or if the affected battery is turned off.

2.9.4.4.16 ASC HI REG Caution Light. (See O, figure 2.9-15.)

The ASC HI REG caution light goes on if the helium pressure downstream of the regulators in the ascent helium lines exceeds 219.5 psia. A CWEA comparator detects a malfunction signal and causes the ASC HI REG caution light to go on. The light goes off when nominal pressure is restored.

The remedial action, in the event of a malfunction, is to set the ASCENT He REG 1 and REG 2 switches to CLOSE. This closes ascent regulator solenoid valves No. 1 and 2 and causes the light to go off. If, upon opening valve No. 1, the light goes on, this valve malfunctioned; valve No. 1 must be closed and valve No. 2 opened.

2.9.4.4.17 ASC PRESS Warning Light. (See P, figure 2.9-15.)

The ASC PRESS warning light goes on if the pressure in either ascent helium tank drops below 2,773 psia before staging. The CWEA receives signals indicating hilium pressure from the MPS. These inputs are routed to low-level comparators. If the compared input is less than 2,773 psia (helium tank), low-pressure signals are fed through an OR gate to an AND gate. An input signal from the staging deadface relay and the low-pressure input enable the AND gate and cause the ASC PRESS warning light to go on. If the pressure in a helium tank is low, the other tank is used. The light goes off upon separation of the descent and ascent stages. Stage separation disables the AND gate, and the light is inhibited.

2.9.4.4.18 ASC QTY Caution Light. (See Q, figure 2.9-15.)

The ASC QTY caution light goes on when the quantity of fuel or oxidizer remaining in the ascent tanks is sufficient for only approximately 10 seconds of burning time. Low-level signals are detected by a discrete voltage detector in the CWEA. The detector output enables an OR gate, the output of which enables an AND gate if an ascent engine-on signal is present. The AND-gate output causes the ASC QTY caution light to go on. Manually shutting down the ascent engine prevents possible explosion due to depletion of either propellant before the other. Additionally, this malfunction indication advises that ascent engine thrusting is not available for midcourse correction or rendezvous braking. If feasible, the astronaut will prepare to use the RCS for thrusting.

2.9.4.4.19 DES QTY Warning Light. (See R, figure 2.9-15.)

The DES QTY warning light goes on if, before staging, the quantity of fuel or oxidizer in the descent tanks is sufficient for approximately 2 minutes of burn time. A discrete voltage is routed to a discrete buffer signal conditioner. This provides a solid-state closure directly to the relay driver, causing the light to go on. The CWEA is bypassed; therefore, the MASTER ALARM lights and tone do not go on.

2.9.4.4.20 DES REG Warning Light. (See S, figure 2.9-15.)

The DES REG warning light goes on if, before staging, pressure in the descent helium lines downstream of the regulators exceeds 259.1 psia or drops below 219.2 psia. Out-of-tolerance signals are detected by high- or low-level comparators in the CWEA. The output of the comparators is applied through an OR gate, which is enabled by the normally closed contacts of the staging deadface relay. The AND-gate output is applied to the output AND gate, which is enabled by the output of a flip-flop. The flip-flop is set by the descent engine arm command. When the output AND gate is enabled, the DES REG warning light goes on. Restoration of nominal pressure, or staging (which opens the contacts of the staging deadface relay, thereby inhibiting the AND gate), causes the light to go off.

2.9.4.4.21 CES AC Warning Light. (See T, figure 2.9-15.)

The CES AC warning light goes on to indicate an excessive increase or decrease in voltage from the GN&CS 28-volt, 800-cps, single-phase and 26-volt, 800-cps, three-phase a-c power supplies. Conditioned signals, representing a-c power supply output voltages are routed to the high- and low-level comparators in the CWEA. Out-of-tolerance voltage signals are detected in the comparators; the output

of any comparator enables an OR gate which sets a flip-flop. When the flip-flop is set, the CES AC warning light goes on. Momentarily setting the GYRO TEST switch (panel 3) to POS RT or POS LEFT resets the flip-flop and causes the light to go off. The light will not go on again until the out-of-tolerance voltage condition is corrected and another failure is detected.

2.9.4.4.22 PRE AMPS Caution Light. (See U, figure 2.9-15.)

The PRE AMPS caution light goes on to indicate an out-of-tolerance condition (less than -4.2 volts dc or more than -5.2 volts dc) in either of the two parallel redundant -4.7-volt d-c power supplies in the CES, which power the TCA preamplifiers. Conditioned signals, representing voltage outputs from the primary and backup -4.7-volt d-c power supplies are sent to high- and low-level comparators in the CWEA. Out-of-tolerance signals, detected by the comparators, enable an OR gate. The OR-gate output, along with the signal from the normally closed contacts of the staging deadface relay, enables an AND gate causing the PRE AMPS light to go on. Pressing the ABORT pushbutton (panel 2) inhibits the AND gate and causes the light to go off. The ABORT pushbutton is used when aborting a mission, using the descent engine. After staging, the staging deadface relay contacts open, disabling the AND gate and causing the light to go off.

2.9.4.4.23 CES DC Warning Light. (See V, figure 2.9-15.)

The CES DC warning light goes on to indicate an excessive decrease or increase in voltage from the GN&CS +4.3-, +6-, -6-, +15-, and -15-volt d-c power supplies. Conditioned signals representing d-c power supply output voltages, are routed to high-level comparators in the CWEA. Out-of-tolerance voltage signals are detected by the comparators. The output of any comparator enables one of five two-input OR gates, setting a flip-flop through a five-input OR gate. When the flip-flop is set, the CES DC warning light goes on. Momentarily setting the GYRO TEST switch (panel 3) to POS RT or POS LEFT resets the flip-flop and causes the light to go off. The light will not go on again until the out-of-tolerance voltage condition is corrected and another failure is detected.

2.9.4.4.24 LGC Warning Light. (See W, figure 2.9-15.)

During LM guidance computer (LGC) operate periods, the LGC warning light goes on in the event of the following LGC failures: power failure, certain scaler failures, and restart or counter failures. The light also goes on in response to an alarm test program. If an LGC failure occurs a failure signal is sent to a discrete voltage detector in the CWEA. The detector output enables an AND gate (if the GUID CONT switch on panel 1 is not set to AGS) causing the LGC warning light to go on. The light goes off when the failure is corrected or if the GUID CONT switch is set to AGS. In the AGS position, the signal from the GUID CONT switch disables the AND gate, causing the light to go off.

2.9.4.4.25 ISS Warning Light. (See X, figure 2.9-15.)

The ISS warning light goes on to indicate a failure in the inertial subsystem section (ISS) of the 3.2-kc power supply, the pulsed integrating pendulous accelerometer (PIPA) during main engine thrusting, the gimbal servo, or the coupling data unit (CDU). A failure signal from the ISS or an inhibit signal from the GUID CONT switch (panel 1) is routed through logic circuitry similar to that for the LGC warning light. The ISS warning light goes off when the failure is corrected or if the GUID CONT switch is set to AGS.

2.9.4.4.26 RNDZ RDR Caution Light. (See Y, figure 2.9-15.)

The RNDZ RDR caution light goes on if no tracking indication or if velocity data are not good. Either condition causes a failure signal to be sent to a discrete voltage detector in the CWEA. When the RENDEZVOUS RADAR selector switch is set to AUTO TRACK, a signal is applied to a flip-flop, resetting it. The reset flip-flop inhibits the output AND gate, and the RNDZ RDR caution light remains off even though a data-no-good condition may exist. When both no tracking indication and velocity data-good-signals are sent to the CWEA, an OR gate is inhibited and the low-level output of this gate is inverted, enabling an AND gate and thereby setting the flip-flop. If a data-no-good condition occurs now, the RNDZ RDR caution light goes on because the output AND gate is enabled by the OR-gate output, the set flip-flop output, and the no tracking indication input. The light goes off when the data-good condition or tracking indication is restored.

2.9.4.4.27 AGS Warning Light. (See Z, figure 2.9-15.)

The AGS warning light goes on to indicate an incorrect output from the abort guidance section (AGS) +28- and +12-volt d-c and 28-volt, 400-cps power supplies or an abort electronics assembly (AEA) malfunction. Conditioned signals, representing voltage outputs of the d-c supplies or the frequency of the output of the a-c supply, are routed to high- and low-level comparators in the CWEA. Out-of-tolerance signals are detected by the comparators. The output of any comparator enables an OR gate, which enables a central OR gate, which in turn enables an AND gate if the AGS STATUS switch (panel 6) is not set to OFF. When the AND gate is enabled, it enables an OR gate which causes the AGS warning light to go on. If the memory and logic self-test results indicate an AEA malfunction, a failure signal is sent to a discrete voltage detector. The detector output enables the AND gate which enables an OR gate causing the AGS warning light to go on. Setting the AGS STATUS switch to OFF inhibits the AND gate and causes the light to go off.

2.9.4.4.28 ED RELAYS Caution Light. (See AA, figure 2.9-15.)

The ED RELAYS caution light goes on when a failure occurs in the master arm relay (K1) or in any one or combination of the stage sequence relays (K2 through K6) located in both ED relay boxes (EDS system A and B). A malfunction signal from the EDS is detected by a discrete voltage detector in the CWEA. The detector output enables an OR gate, which enables an AND gate (if the MASTER ARM switch (panel 8) is not set to ON), causing the ED RELAYS caution light to go on. The SYS A and/or SYS B component caution lights on the EXPLOSIVE DEVICES portion of panel 8 also go on. If any one or combination of relays K3 through K6 caused the ED RELAYS light and the SYS A and/or SYS B component caution lights to go on, there is no way of isolating the faulty relay or relays. However, K2 can be reset by momentarily holding the STAGE RELAY switch (panel 8) to RESET. If the lights go off K2 was at fault. If the lights do not go off, the ED: LOGIC PWR A and/or LOGIC PWR B circuit breakers (depending on which component caution light is on) on panels 11 and 16, respectively, must be opened.

The MASTER ARM switch (panel 8) must not be touched. If this switch is set to ON while a failure exists in the stage sequence relays, a complete staging operation, or part of the staging operation (depending on which relay or relays failed) would result. Deactivating one EDS system (A or B) will not prevent performance of EDS functions. Either system can perform EDS functions.

2.9.4.4.29 S-BD RCVR Caution Light. (See AB, figure 2.9-15.)

The S-BD RCVR caution light goes on if the S-band receiver automatic gain control fails (loss of S-band uplink voice). Loss of MSFN reception can be monitored on the SIGNAL STRENGTH indicator on panel 12. It will indicate less than 1. Communications can be obtained by setting the XMTR/RCVR switch (panel 12) to SEC. The S-BD RCVR caution light circuitry is enabled only if the RANGE FUNCTIONS switch (panel 12) is set to TV/CWEA ENABLE. The light goes off when this switch is set to OFF/RESET.

Table 2.9-3. Caution and Warning Electronics Assembly - Malfunction Data Summary

Input Description (Telemetry Code No.)	Malfunction	Illuminated By	CWEA Voltage Trip Level (volts dc)	Light (Telemetry Code No.)	Reset	Inhibit/Enable (Telemetry Code No.)	Detail (Figure 2.9-15)
Emergency O_2 valve electrically open (GF3572X) Emergency O_2 valve position indicator (VPI) open (GF3081X)	Low cabin pressure	Low-pressure signal (<4.15±0.15 psia) from cabin pressure switch		CABIN (GL4036) C	Restored cabin pressure (4.8 psia)	Inhibited during cabin depressurization and when CABIN REPRESS valve on ECS module set to MANUAL	A
Coolant pump failure No. 2 (GF2935X)	Coolant pump failure	Low ΔP signal (<3 psia) from sensor in coolant line downstream of glycol pumps No. 1 and 2 (GLYCOL component caution light, panel 2, goes on.)		ECS (GL4056) C	GLYCOL switch (panel 2)		B
CO_2 partial pressure (GF1521P)	High CO_2 partial pressure	High CO_2 partial pressure signal (>7.6 mm Hg) from sensor (CO_2 component caution light goes on.)	2.274		Restored CO_2 partial pressure (CO_2 component caution light remains on until CO_2 CANNISTER SEL valve on ECS module is set to PRIM.)	Inhibit - ECS: CO_2 SENSOR circuit breaker (panel 16)	
Water separator No. 1 and 2 speed (GF9999U)	Water separator failure	Low rpm signal (<792.5 rpm) from sensor in centrifuge of selected water separator (H_2O SEP component caution light goes on.)	1.651		Newly selected water separator		
Suit fan No. 1 (GF1083)	Suit fan No. 1 failure	Low ΔP signal (<6 in. H_2O) across suit fan assembly (SUIT FAN component caution light goes on.)			SUIT FAN selector switch (panel 2) set to position 2	Inhibit - ECS: SUIT FAN 1 circuit breaker (panel 11)	

Table 2.9-3. Caution and Warning Electronics Assembly - Malfunction Data Summary (Cont)

Input Description (Telemetry Code No.)	Malfunction	Illuminated By	CWEA Voltage Trip Level (volts dc)	Light (Telemetry Code No.)	Reset	Inhibit/Enable (Telemetry Code No.)	Detail (Figure 2.9-15)
Coolant fluid level (GF2041X)	Low glycol quantity	Low-level signal (<10% remaining in accumulator) from sensor in coolant accumulator		GLYCOL (GL4058) C		Inhibited when GLYCOL switch is set to INST (SEC)	D
Water sublimator coolant outlet temperature (GF9998U)	Coolant evaporator outlet high temperature	High-temperature signal (>+50° F) from sensor at sublimator outlet of primary coolant loop	1.489		Restored temperature	Inhibited when GLYCOL switch is set to INST (SEC)	
Descent oxygen tank pressure (GF3584P)	Low descent-oxygen-tank quantity	Low-pressure signal (<135 psia or less than 5% remaining) from sensor in descent oxygen tank	0.5	O_2 QTY (GL4057) C	O_2/H_2O QTY MON selector switch set to C/W RESET	Enabled by staging deadface switch	E
Ascent oxygen tank No. 1 pressure (GF3582P)	Ascent tank No. 1 less-than-full pressure or low pressure	Less-than-full pressure signal (>684 psia) before staging or low-pressure signal (>99.6 psia) from sensor in tank after staging	3.408 0.498				
Ascent oxygen tank No. 2 pressure (GF3583P)	Ascent tank No. 2 less-than-full pressure	Less-than-full pressure signal (>682.4 psia) from sensor in tank before staging	3.412				

Table 2.9-3. Caution and Warning Electronics Assembly - Malfunction Data Summary (cont)

Input Description (Telemetry Code No.)	Malfunction	Illuminated By	CWEA Voltage Trip Level (volts dc)	Light (Telemetry Code No.)	Reset	Inhibit/Enable (Telemetry Code No.)	Detail (Figure 2.9-15)
Suit outlet pressure (GF1301P)	Low suit pressure (spare suit compressor failure)	Low-pressure signal (<3.11 psia) from sensor in suit circuit	1.556	SUIT/FAN (GL4037) W	Restored suit pressure		F
Suit fan No. 2 failure (GF1084X)	Low ΔP (<6 in. H_2O) in suit fan No. 2	Low ΔP signal across suit fan section when suit fan No. 2 is in use (SUIT FAN component caution light, panel 2, goes on.)				Inhibit - ECS: SUIT FAN 2 circuit breaker (panel 16)	G
Helium regulator pressure, system A (GR1201P)	High or low helium regulator outlet pressure in RCS system A	High- or low-pressure signal (>218.8 or <164.4 psia) from sensor in helium line	2.918 2.349	RCS A REG (GL4032) W	Restored pressure	Inhibited if main shutoff solenoid valves in system A are closed (GR9609)	
Helium regulator pressure, system B (GR1202P)	High or low helium regulator outlet pressure in RCS system B	High- or low-pressure signal (>218.8 or <164.4 psia) from sensor in helium line	2.918 2.349	RCS B REG (GL4033) W	Restored pressure	Inhibited if main shutoff solenoid valves in system B are closed (GR9610)	G
RCS helium pressure tank A (GR1101P)	Low helium tank pressure in RCS system A	Low-pressure signal (<1,696.1 psia) from sensors at helium tank	2.423	RCS (GL4052) C	TEMP/ PRESS MON selector switch (panel 2) set to He		H
RCS helium pressure, tank B (GR1102P)	Low helium tank pressure in RCS system B	Low-pressure signal (<1,696.1 psia) from sensors at helium tank	2.423		TEMP/ PRSS MON selector switch set to He		

Table 2.9-3. Caution and Warning Electronics Assembly - Malfunction Data Summary (cont)

Input Description (Telemetry Code No.)	Malfunction	Illuminated By	CWEA Voltage Trip Level (volts dc)	Light (Telemetry Code No.)	Reset	Inhibit/Enable (Telemetry Code No.)	Detail (Figure 2.9-15)
Pitch trim (GH1323X) Roll trim (GH1330X)	Failure of automatic function in Y- or Z-axis of the descent engine gimbal drive assembly	Discrepancy between gimbal drive signal and gimbal response from Y- or Z-axis trim function		ENG GMBL (GL4043) C		Enabled by descent engine arm signal; inhibited when staging occurs	I
Temperature - quad 4 cluster (GR6001T) Temperature - quad 3 cluster (GR6002T) Temperature - quad 2 cluster (GR6003T) Temperature - quad 1 cluster (GR6004T)	RCS thruster quad heater failure	High- or low-temperature signal (>+241° F or <+130° F) from heater assemblies	2.790 4.725	HEATER (GL4053) C	TEMP MONITOR switch (panel 3) set to affected heater position (Switch must be set to all positions, including return to starting position.)	MASTER ALARM lights and tone are disabled	J
Rendezvous radar temperature (GN7723T)	Rendezvous radar antenna assembly heater failure	High- or low-temperature signal (<-50.48°F or >+148.9°F)	1.869 4.361				

Table 2.9-3. Caution and Warning Electronics Assembly - Malfunction Data Summary (cont)

Input Description (Telemetry Code No.)	Malfunction	Illuminated By	CWEA Voltage Trip Level (volts dc)	Light (Telemetry Code No.)	Reset	Inhibit/Enable (Telemetry Code No.)	Detail (Figure 2.9-15)
S-band antenna temperature (GT0454T)	S-band steerable antenna assembly heater failure	High- or low-temperature signal (<-64.1 F or >+152.6 F)	1.743 4.421				J (cont)
Jet driver A4D output command (GH1419V) Thrust chamber A4D response (GR5032P) Jet driver A4R output command (GH1421V) Thrust chamber A4R response (GR5034P) Jet driver B4U output command (GH1418V) Thrust chamber B4U response (GR5031P) Jet driver B4F output command (GH1420V) Thrust chamber B4F response (GR5033P) Jet driver A3U output command (GH1422V)	Failure of TCA in RCS system A or B	Discrepancy between primary coil command to fire specific TCA and chamber pressure response at that TCA, or failure such that opposing collinear jets are on simultaneously (If TCA fails, associated QUAD talkback (panel 2) provides a red display.)		RCS TCA (GL4031) W		Inhibited when isolation valve associated with failed TCA is closed (QUAD switch, panel 2, set to CLOSE)	K

Table 2.9-3. Caution and Warning Electronics Assembly - Malfunction Data Summary (cont)

Input Description (Telemetry Code No.)	Malfunction	Illuminated By	CWEA Voltage Trip Level (volts dc)	Light (Telemetry Code No.)	Reset	Inhibit/Enable (Telemetry Code No.)	Detail (Figure 2.9-15)
Thrust chamber A3U response (GR5035P)				RCS TCA (cont)			K (cont)
Jet driver A3R output command (GH1425V)							
Thrust chamber A3R response (GR5038P)							
Jet driver B3D output command (GH1423V)							
Thrust chamber B3D response (GR5036P)							
Jet driver A3R output command (GH1424V)							
Thrust chamber B3A response (GR5037P)							
Jet driver A2D output command (GH1427V)							
Thrust chamber A2D response (GR5040P)							
Jet driver A2A output command (GH1428V)							
Thrust chamber A2A response (GR5041P)							

Table 2.9-3. Caution and Warning Electronics Assembly - Malfunction Data Summary (cont)

Input Description (Telemetry Code No.)	Malfunction	Illuminated By	CWEA Voltage Trip Level (volts dc)	Light (Telemetry Code No.)	Reset	Inhibit/Enable (Telemetry Code No.)	Detail (Figure 2.9-15)
Jet driver B2U output command (GH1426V)				RCS TCA (cont)			K (cont)
Thrust chamber B2U response (GR5039P)							
Jet driver B2L output command (GH1429V)							
Thrust chamber B2L response (GR5042P)							
Jet driver A1U output command (GH1430V)							
Thrust chamber A1U response (GR5043P)							
Jet driver A1F output command (GH1432V)							
Thrust chamber A1F response (GR5045P)							
Jet driver B1D output command (GH1431V)							
Thrust chamber B1D response (GR5044P)							
Jet driver B1L output command (GH1433V)							

Table 2.9-3. Caution and Warning Electronics Assembly - Malfunction Data Summary (cont)

Input Description (Telemetry Code No.)	Malfunction	Illuminated By	CWEA Voltage Trip Level (volts dc)	Light (Telemetry Code No.)	Reset	Inhibit/Enable (Telemetry Code No.)	Detail (Figure 2.9-15)
Thrust chamber B1L response (GR5046P)				RCS TCA (cont)			K (cont)
Commander's bus voltage (GC0301V)	Low-voltage condition	Low-voltage signal (<26.50v)	3.312	DC BUS (GL4034) W	Restored voltage		L
LM Pilot's bus voltage (GC0302V)	Low-voltage condition	Low-voltage signal (<26.50v)	3.312				
Inverter bus voltage (GC0071V)	Inverter output voltage	Out-of-tolerance voltage signal (<112v) from a-c bus	4.480	INVERTER (GL4046) C	Restored voltage	Inhibited when INVERTER switch (panel 14) is set to OFF	M
Inverter bus frequency (GC0155F)	Inverter output frequency	Out-of-tolerance frequency (<398 cps or >402 cps)	2.250 2.750				
Battery No. 5 (GC9965U) Battery No. 6 (GC9966U) Battery No. 2 (GC9962U) Battery No. 3 (GC9963U) Battery No. 4 (GC9964U)	Failure in any one of the four descent or two ascent batteries	Overcurrent, reverse-current, or over-temperature condition in any one or more of the six batteries		BATTERY (GL4047) C	Restored condition in affected batteries	Inhibited when affected battery is turned off	N

Table 2.9-3. Caution and Warning Electronics Assembly - Malfunction Data Summary (cont)

Input Description (Telemetry Code No.)	Malfunction	Illuminated By	CWEA Voltage Trip Level (volts dc)	Light (Telemetry Code No.)	Reset	Inhibit/Enable (Telemetry Code No.)	Detail (Figure 2.9-15)
Regulator outlet manifold pressure (GP0025P)	High ascent-Helium-regulator outlet pressure	High-pressure signal (>219.5 psia) from sensor in ascent helium lines downstream of regulators	3.658	ASC HI REG (GL4041) C	Reduced pressure (Close affected regulator.)		O
Helium tank No. 1 pressure (GP0001P) Helium tank No. 2 pressure (GP0002P) Fuel bipropellant valve inlet pressure (GP1501P) Oxidizer bipropellant valve inlet pressure (GP1503F)	Low helium-tank pressure Low propellant pressure at bipropellant valve inlet of ascent stage	Low-pressure signal (<2.772.8 psia) from sensors (two) in tank Low-pressure signal (<119.8 psia) from sensors in fuel line at bipropellant valve	3.742 2.395	ASC PRESS (GL4022) W	Restored pressure (possible only if temperature rises) Restored pressure	Enabled before staging (dead-facing) Inhibited after staging	P
Fuel tank low level (GP0908X) Oxidizer tank low level (GP1408X)	Low ascent fuel quantity Low ascent oxidizer quantity	Low-quantity-level signal from sensor in ascent fuel tank Low-quantity-level signal from sensor in ascent oxidizer tank		ASC QTY (GL4042) C		Enabled when ascent engine is on (GH1260)	Q
Descent propellant tanks (GQ4455X)	Low descent propellant quantity	Low-quantity-level signal from sensors in descent fuel or oxidizer tanks (approximately 2 minutes of burn time remaining)		DES QTY (GL4024) W		MASTER ALARM lights and tone are disabled.	R

Table 2.9-3. Caution and Warning Electronics Assembly - Malfunction Data Summary (cont)

Input Description (Telemetry Code No.)	Malfunction	Illuminated By	CWEA Voltage Trip Level (volts dc)	Light (Telemetry Code No.)	Reset	Inhibit/Enable (Telemetry Code No.)	Detail (Figure 2.9-15)
Helium regulator outlet manifold pressure (GQ3018P)	High or low descent-helium-regulator outlet pressure	High- or low-pressure signal (>260 or <220 psia) from sensor in descent helium line downstream of regulators	4.318 3.654	DES REG (GL4023) W	Restored pressure	Enabled before staging (deadfacing) and delayed (6±0.5-second delay) descent engine-on command (GH1348)	S
28 vac, ϕ1 (GH140[illegible]) 26 vac, ϕA (GH1401V) 26 vac, ϕB (GH1402V) 26 vac, ϕC (GH1403V)	Failure in either of two a-c power supplies in CES	Out-of-tolerance voltage signal: 28 vac (<26v or >30v) 26 vac (<23v or >29v)	4.194 4.839 3.833 4.833	CES AC (GL4026) W	GYRO TEST switch set to POS RT or NEG RT		T
-4.7-volt supply (GH1488V) -4.7-volt supply (GH1489V)	Failure of regulated power supply that provides power to RCS jet pre-amplifiers	Out-of-tolerance voltage signal (>-4.2v or<-5.2v) from either of two parallel redundant -4.7-volt regulated power supplies in CES	3.500 4.333	PRE AMPS (GL4050) C	Restored voltage	Enabled by DES BATS switch (panel 14); inhibited by ABORT pushbutton (panel 1) (GY0050)	U
Attitude and translation control assembly power supply: +15 vdc (GH1406V) -15 vdc (GH1407V)	Failure of any d-c power supply in CES	Out-of-tolerance voltage signal: <14V or >16V <-16.0 or >-14V	4.118 4.706	CES DC (GL4027) W	GYRO TEST switch (panel 3) set to POS RT or NEG RT		V

Table 2.9-3. Caution and Warning Electronics Assembly - Malfunction Data Summary (cont)

Input Description (Telemetry Code No.)	Malfunction	Illuminated By	CWEA Voltage Trip Level (volts dc)	Light (Telemetry Code No.)	Reset	Inhibit/Enable (Telemetry Code No.)	Detail (Figure 2.9-15)
+4.3 vdc (GH1408V) +6.0 vdc (GH1493V) -6.0 vdc (GH1494V)		<3.8v or >4.8v <5.4v or >6.6v <-6.6 or>-5.4	3.800 4.800 3.857 4.714				
LM guidance computer (GG9001X)	Failure in any LGC regulated power supply Counter failure Scaler failure	Out-of-tolerance voltage signal from 28-, 3-, or 13-volt supply Failure in counter, sensed by program checks Failure in scaler, sensed by program checks		LGC (GL4029) W	Restored voltage	Inhibited when GUID CONT switch (panel 1) is set to AGS (GH1621)	W
Inertial subsection (CG9002X)	Inertial measurement unit (IMU) failure PIPA failure	Excessive servo error; 3.2-kc power supply; 800-cps 5% supply PIPA failure during main engine thrusting		ISS (GL4030) W		Inhibited when GUID CONT switch is set to AGS (GH1621)	X
Rendezvous radar data (GN7621X)	Rendezvous radar data no good (no track condition)	Data-no-good signals from sensors in rendezvous radar electronic assembly		RNDZ RDR (GL4048) C	Restored data-good condition	Enabled when RENDEZVOUS RADAR selector switch is set to AUTO TRACK and data good signal is acquired.	Y

Table 2.9-3. Caution and Warning Electronics Assembly - Malfunction Data Summary (cont)

Input Description (Telemetry Code No.)	Malfunction	Illuminated By	CWEA Voltage Trip Level (volts dc)	Light (Telemetry Code No.)	Reset	Inhibit/Enable (Telemetry Code No.)	Detail (Figure 2.9-15)
28-volt supply (GI3214V)	Failure of regulated power supply in AGS	<25.2v or >30.8v		AGS (GL4028) W	Restored voltage	Inhibited when AGS STATUS switch (panel 6) is set to OFF (GI3305)	Z
12-volt supply (GI3215V)		<10.8v or >13.2v	3.857 4.714				
AEA test mode failure (GI3232V)		<385 cps or >415 cps	0.625 4.375				
28-volt, 400-cps supply (GI3233F)		28 volts (<25.2v or >30.8v)	3.937 4.812				
Master arm relay K1 or any one or combination of stage sequence relays K2 through K6 (GY0201X - EDS system A, and GY0202X - EDS system B)	Any one or combination of ED relays K1 through K6 fails on.	Relay contact closure (SYS A and/or SYS B component caution lights, panel 8, also go on.)		ED RELAYS (GL4051) C	If relay K2 fails, STAGE RELAY switch (panel 8) set to RESET	Inhibited when MASTER ARM switch (panel 8) or ABORT STAGE pushbutton (panel 1) is used	AA
S-band receiver (GT0994V)	Failure in S-band receiver automatic gain control (loss of up-link voice)	SIGNAL STRENGTH indicator (panel 12) indicates less than 1.	1.071	S-BD RCVR C	RANGE FUNCTIONS switch (panel 12) set to OFF/RESET	Enabled when RANGE FUNCTIONS switch is set to TV/CWEA ENABLE	AB
CWEA power supply	Failure of CWEA regulated power supply	Out-of-tolerance voltage signal from CWEA +9-, +23-, +4-, and -3-volt power supplies		C/W PWR (GL4054) C	Restored voltage		See figure 2.9-14

2.9.4.5 Data Storage Electronics Assembly. (See figure 2.9-16.)

The DSEA is a single-speed, four-track, magnetic-tape recorder that stores voice and time-correlation data (TCD) (mission elapsed time). A maximum of 10 hours of recording time is provided (2.5 hours on each track) by driving the tape in one direction over the record head and, on completion of a pass, switching to the next track and reversing tape direction. The tape is supplied in a magazine, consisting of a supply reel and takeup reel. Once the magazine is properly placed in the DSEA and the control logic is placed in track No. 1 forward condition (reset), the DSEA is operated with the RECORDER switch on the COMMUNICATIONS portion of panel 12 in conjunction with the VOX trigger signal supplied by the signal-processing assembly (SPA) of the CS.

The DSEA operates in either a manual or semiautomatic mode. In the manual mode, the ICS T/R switch on the AUDIO portion of panel 8 or 12 is set to ICS T/R and the MODE switch on either panel is set to PTT. The PTT position bypasses the automatic voice sense circuits. The Commander or LM Pilot can close a push-to-talk switch (on the attitude controller assemblies or the umbilicals) and speak into a microphone. The push-to-talk switch energizes the VOX key relay, providing a ground for activation of the power control logic in the DSEA. In the energized state, this relay routes an enabling signal through the RECORDER switch and is applied to the recorder electronics. The audio signal generated by the astronaut is conditioned by the SPA and fed to the recorder for transfer to tape. For operation in the semiautomatic mode, the MODE switch is set to VOX. With the switch set to this position, the VOX trigger circuit is enabled. The VOX sense circuit senses voice input from within the cabin or from the communications receivers and feeds this signal to the VOX trigger circuit. When the two inputs are coincident, the trigger is activated. Setting the MOD switch to ICS/PTT results in a continuous key for the recorder. When operating in this mode, recorder operation is manually controlled with the RECORDER switch (panel 12). With the MODE switch in the ICS/PTT position, the RECORDER switch must be in the OFF position until voice is to be taped. The RECORDER TAPE talkback (panel 12) indicates tape motion during recording.

The DSEA consists of signal-conditioning electronics, a power supply, control logic, and a tape-motion amplifier. The signal-conditioning electronics accepts audio and TCD signals and conditions them before they are fed to the record head. Audio signals routed through the astronaut's intercommunications bus are applied to a voice amplifier that provides the band-pass filtering, impedance matching, and signal amplification required to drive the record head. Simultaneously with the voice input, TCD is supplied (as binary inputs) from the serial time code generator in the PCMTEA. A DSEA time-correlation data modulator accepts and converts serial binary-coded decimal data to frequency-coded data for recording. The binary input signals modulate a voltage-controlled oscillator to produce an output frequency of 4,175 cps, with a binary 1 input; 4,625 cps, with a binary 0 input. These voice and timing signals are mixed with the outputs of a reference oscillator that supplies a constant 5.2-kc signal for subsequent use in the DSEA test station, servoamplifiers, and a bias oscillator, which provides a 33-kc signal that eliminates nonlinear response in playback of voice and data. This permits recording multiplexed data on each of the four tracks. The control logic provides transport control, automatic track switching for the four tape passes, and starting and stopping of the DSEA. The tape transport uses a closed-loop capstan drive system with controlled tension in the record/reproduce head area. Dual capstans with a high angle of tape wrap provide sufficient driving friction without the use of pinch rollers. The drive motor in the tape transport is of the single-phase, 400-cycle, hysteresis, synchronous type with constant speed (+0.1% of input power). During recording, the reproduce head reads the recorded track and, through the tape-motion amplifier, supplies the signal that operates the TAPE talkback

2.9.4.5.1 Power Supply.

The DSEA power supply consists of a power converter and voltage regulator, which provide regulated d-c power for all DSEA electronics. The power converter conditions 115-volt, 400-cps, power supplied from control logic circuits, to voltage levels of +17 and -8 volts dc. The +17 volts operates relays in control logic and tape-motion monitor circuits. It is also applied to the voltage regulator, along with the -8 volts. A-C power for the capstan drive motor is supplied from a tap on the primary winding of a transformer (T1). The voltage regulator regulates the +17 and -8 volts dc from the power converter to +11.5 and -4.5 volts, respectively. These voltage levels are required for DSEA electronic circuitry.

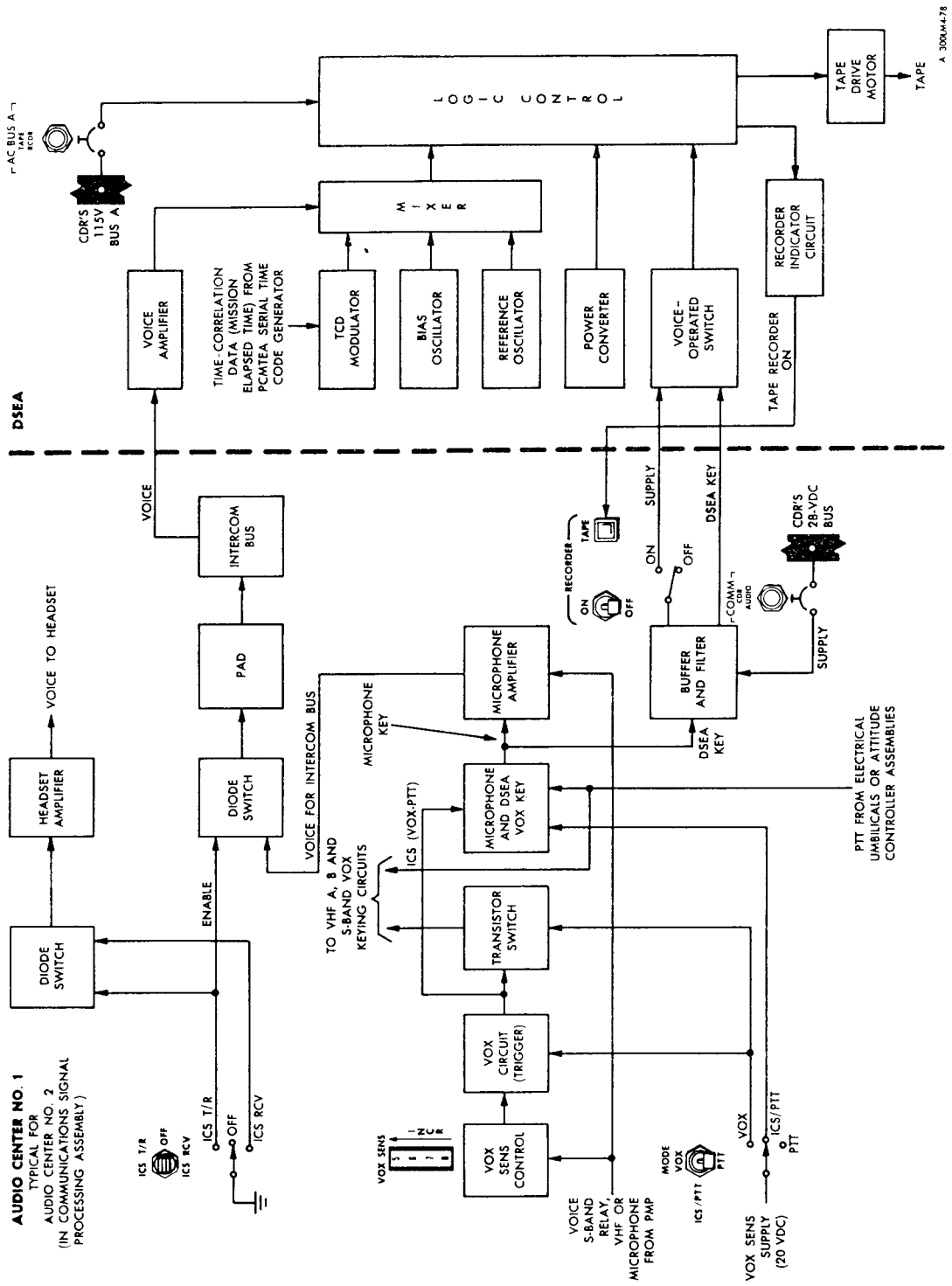

Figure 2.9-16. DSEA - Functional Block Diagram

2.9.5 PERFORMANCE AND DESIGN DATA.

The performance and design data for the IS are given in table 2.9-4.

Table 2.9-4. Instrumentation Subsystem - Performance and Design Data

Pulse-code-modulation and timing electronics assembly	
Height	6.72 inches
Width	5.12 inches
Length	19.75 inches
Weight	23.0 pounds (approximate)
Power requirements	
Excitation	20 to 32 volts dc
Consumption	11 watts
Operating temperature (ambient)	+30° to +130° F
Reliability	
Component calibration	Amplifiers, analog-to-digital converter, and all analog circuitry with functions common to 10 or more measurements
Calibration levels	4.250 volts, 0.750 volts
Accuracy	±9 millivolts on high level
High-level analog signals	
Number of channels	277
Normal bit rate (51.2 kilobits per second)	200 channels externally programmed, 77 channels internally redundant
Reduced bit rate (1.6 kilobits per second)	113 channels externally programmed, 41 channels internally redundant
Signal levels	0 to 5 volts
Analog error	0.5% (maximum)
Sampling rate	1, 10, 50, 100, or 200 samples per second
Bits formed per channel input	8
Parallel digital signals	
Number of channels	75
Normal bit rate	1, 10, 50, 100, or 200 samples per second
Reduced bit rate	1 sample per second

Table 2.9-4. Instrumentation Subsystem - Performance and Design Data (cont)

Pulse-code-modulation and timing electronics assembly (cont)	
Parallel digital signals (cont)	
Signal levels	
Binary 1	+3.5 to +10 volts
Binary 0	-0.5 to +1.5 volts
Bits per output word	8, 16, or 32
Sampling sequence for 8-, 16-, and 32-bit input words	Sequential, with eight most significant bits first
Serial digital signals	
Number of channels	2 channels, serial by bit
Signal levels	
Binary 1	+3.5 to +10 volts
Binary 0	-0.5 to +1.5 volts
Word length	One 24-bit channel One 40-bit channel
Normal bit rate	50 samples per second
Reduced bit rate	None
1,024-kpps input signals	
Type	Square wave
Amplitude	7±3 volts, peak to peak
NRZ output	
Bit rate	51.2 or 1.6 kilobits per second
Signal levels	
Binary 1	+6±0.5 volts
Binary 0	0.0 to +0.5 volt
RZ output	
Bit rate	51.2 or 1.6 kilobits per second
Signal levels	4.5±2 volts, peak to peak

Table 2.9-4. Instrumentation Subsystem - Performance and Design Data (cont)

Pulse-code-modulation and timing electronics assembly (cont)	
Data rate timing output	
Frequency	51.2 or 1.6 kpps (selected by remote switching)
Signal levels	4.5±2 volts, peak to peak
Subcarrier reference output	
Frequency	51.2 pps
Signal levels	
10-kilohm output load	0.0 to +0.5 volt and +6±0.5 volts
100-ohm output load	4.5±2 volts, peak to peak
Subframe sync pulse output	
Frequency	1 pps
Signal levels	4.5±2 volts, peak to peak
512-kpps timing output signals	
Frequency	512 kpps
Signal levels	0.0 to 0.5 volt and +3.0 ±0.5 volts
6.4-kpps timing output signals	
Frequency	6,400 pps
Signal levels	0.0 to 0.5 volt and +3.0 ±0.5 volts
1.6-kpps timing output signals	
Frequency	1,600 pps
Signal levels	0.0 to 0.5 volt and +3.0 ±0.5 volts
10-pps timing output signal	
Frequency	10 pps
Signal levels	0.0 to 0.5 volt and +3.0 ±0.5 volts
1024-kpps timing output signal	
Frequency	1024 kpps
Signal levels	0.0 to 0.5 volt and +3.0 ±0.5 volts
Time-correlation data	
40-bit serial start	
Frequency	1 pps
Signal level	4.5±1 volts, peak to peak

Table 2.9-4. Instrumentation Subsystem - Performance and Design Data (cont)

Pulse-code-modulation and timing electronics assembly (cont)	
Time-correlation data (cont)	
40-bit serial stop	
Frequency	1 pps
Signal level	4.5±1 volts, peak to peak
40-bit serial sync	
Frequency	2 kpps
Signal level	4.5±1 volts, peak to peak
24-bit serial sync	
Frequency	1.2 kpps
Signal level	4.5±1 volts, peak to peak
24-bit serial stop	
Frequency	1 pps
Signal level	4.5±1 volts, peak to peak
Low-bit-rate split-phase data outputs	
Bit rate	1.6 kilobits per second
Signal levels	+6.0 ±0.5 volts (up level) +0.0 to 0.5 volt (down level)
Analog-to-digital conversion	
Each analog sample	8-bit binary word output
Full-scale input to ADC	11111110
Zero input	00000001
Greater than full scale	11111111
Less than zero	00000000
Signal-conditioning electronics assembly	
Height	8.0 inches
Width	5.25 inches
Length	23.90 inches
Weight	
ERA-1	35.44 pounds
ERA-2	35.25 pounds

Table 2.9-4. Instrumentation Subsystem - Performance and Design Data (cont)

Signal-conditioning electronics assembly (cont)	
Power requirements	
Excitation	28 volts dc
Consumption	
ERA-1	16.04 watts
ERA-2	14.23 watts
Thermal characteristics	An efficient thermal path exists between heat-producing sources within subassemblies and an external heat sink.
Environmental limits	
Vibration	8.1g rms from 20 to 2,000 cps
Acceleration	8g
Shock	15g sawtooth
Temperature	
Operating	+30° to +130° F
Nonoperating	-65° to +160° F
D-C amplifiers	
Inputs	
Unipolar mode	0 to 200 millivolts dc and 0 to 5 volts dc
Bipolar mode	-100 millivolts to -2.5 volts dc and +100 millivolts to +2.5 volts dc
Output	0 to 5 volts dc (four single channels)
Attenuators	
Inputs	
Unipolar mode	0 to 5 volts dc (minimum attenuation) 0 to 40 volts dc (attenuation of 8)
Bipolar mode	-2.5 to +2.5 volts dc and -20 to +20 volts dc
Output	0 to 5 volts dc (four single channels)
AC-to-dc converters	
Input frequency	380 to 840 cps
Output	0 to 5 volts dc (three single channels)
Analog signal isolating buffer	
Input	0 to 5 volts dc
Output	0 to 5 volts dc (four single channels)

Table 2.9-4. Instrumentation Subsystem - Performance and Design Data (cont)

Signal-conditioning electronics assembly (cont)	
Discrete signal isolating buffers	
504-2	
Turn-on voltage	0.5 to 2.5 volts dc
Output voltage	0.to 5 volts dc (10 dual channels)
504-3-4	
Output voltage	0 to 5 volts dc (12 dual channels)
504-5	
Output voltage	0 to 5 volts dc (12 single channels)
Frequency-to-dc converter	
Input frequency	380 to 420 cps
Output	0 to 5 volts dc
Resistance-to-dc converters	
Resistance changes	665 to 2,795 ohms (-200° to +500° F)
Output	0 to 5 volts dc (four dual channels)
Phase-sensitive demodulators	
Output	0 to 5 volts dc
Caution and warning electronics assembly	
Height	7.0 inches
Width	6.750 inches
Length	11.750 inches
Weight	19.75 pounds (approximate)
Power requirements	
Excitation	28 volts dc
Consumption	13 watts
Internally generated	+4, +23, +12, +9, -3, +7, and 16.3 volts dc, rectified
	Three 34-volt, zero-to-peak, 10-kc, center-tapped square waves
	One 15.5-volt, zero-to-peak, 10-kc, center-tapped square wave
	Two 10-kc reference signals

Table 2.9-4. Instrumentation Subsystem - Performance and Design Data (cont)

Caution and warning electronics assembly (cont)	
Environmental limits	
Temperature	
Operating	+35° to +135° F
Nonoperating	-65° to +160° F
Vibration	8.1g rms from 20 to 2,000 cps
Shock	15g sawtooth
Acceleration	8g
Input signals	
Caution	
Discrete	26
Analog	23
Inhibit	3
Enable	4
Warning	
Discrete	10
Analog	22
Inhibit	7
Enable	2
Indicator reset	
Caution	10
Warning	1
Thrust chamber assembly (TCA) logic	
Command (discrete or analog)	16
Response (discrete)	16
Output signals	
Caution light	17
Warning light	14
Component caution light	2
Talkback	8
MASTER ALARM pushbutton/light	2

Table 2.9-4. Instrumentation Subsystem - Performance and Design Data (cont)

Caution and warning electronics assembly (cont)	
Inputs	
Analog signals	0.5 to 5.0 volts dc
Discrete, malfunction	3.4 to 6.0 volts dc
Discrete, no malfunction	0 to 0.5 volt dc
Out-of-limit inputs	Delay time (input to output): 0.5 second maximum
Telemetry output	
Malfunction	Relay contacts open
No malfunction	Relay contacts closed
Voltage limits	
Upper	Output signal generated when preset voltage is exceeded
Lower	Output signal generated when preset voltage is exceeded
Data storage electronics assembly	
Height	2.05 inches
Width	4.0 inches
Length	6.22 inches
Weight	38 ounces
Power requirements	
Power supply input	115±2.5 volts rms, 400 cps, single phase
Reset command	28±4 volts dc
VOX command input	28+4-8 volts dc
Output	+17 volts dc unregulated, +11.5 volts dc regulated 26.0 volts rms
Magnetic heads	Two record/reproduce heads to provide four tracks
Voice record amplifier	
Input level	-3 to +7 dbm
Frequency response	300 cps to 3,000 cps ±3 db
Bias oscillator	
Output frequency	33 kc ±10%
Output level	5±1 milliamperes

Table 2.9-4. Instrumentation Subsystem - Performance and Design Data (cont)

Data storage electronics assembly (cont)	
Tape	
Speed	0.6 inch per second
Total recording time	10 hours (maximum)
Length of tape between sensor strips	450 feet (minimum)
Power Source	
AC	115±2.5 volts rms
DC	28 volts dc
DSEA transport	
Speed error	0.05 of input power deviation
Start time	100 milliseconds after receipt of VOX trigger
Stop time	300 milliseconds after cessation of VOX trigger
Record time	Total of 10 hours
End of tape	Automatically sensed
Time-correlation data	
Input	Serial NRZ-C (100 bits per second)
Input levels	
Binary 1	6±1 volts
Binary 0	-0.5 to 1.5 volts

2.9.6 OPERATIONAL LIMITATIONS AND RESTRICTIONS.

The operational limitations and restrictions for the IS are as follows:

- The PCMTEA, SCEA, and signal sensors (for preconditioned transducers) must be warmed up for 5 minutes after coolant-loop stabilization, before use. If the 5-minute warmup period is not allowed, the accuracy of data will be uncertain.
- Total recording time (voice keyed) for the DSEA voice tape recorder is 10 hours. The DSEA will not record voice after 10-hour use.

2.10 LIGHTING.

2.10.1 INTRODUCTION.

Exterior and interior lighting aids in the performance of crew visual tasks and lessens astronaut fatigue and interior-exterior glare effects. Exterior lighting is used for LM and CSM tracking and docking maneuvers. Interior lighting illuminates the cabin and the controls and displays on the Commander's and LM Pilot's panels. Power for exterior and interior lighting is routed through the 28-volt d-c LTG circuit breakers on panels 11 and 16 and the 115-volt AC BUS A and AC BUS B lighting circuit breakers on panel 11.

2.10.2 FUNCTIONAL DESCRIPTION.

LM lighting is provided by exterior and interior lights and lighting control equipment. (See figure 2.10-1.) The exterior lighting enables the astronauts to visually guide and orient the LM and CSM to achieve successful tracking or docking. Interior lighting provides general cabin illumination, integral electroluminescent (EL) lighting of displays and controls, and radioluminescent (RL) and photoluminescent lighting of switch tips and window reticles.

2.10.2.1 Exterior Lighting. (See figure 2.10-2.)

Exterior lighting includes a radioluminescent docking target, radioluminescent EVA handrail markers, five docking lights, and a high-intensity tracking light. The color, brightness, and lighting method of the exterior lights are listed in table 2.10-1. The EXTERIOR LTG switch on the LIGHTING portion of panel 3 controls the five docking lights and the high-intensity tracking light on the exterior of the ascent stage.

2.10.2.1.1 Docking Lights. (See figure 2.10-3.)

Five running lights mounted on the exterior of the LM provide visual orientation and permit gross attitude determination relative to a line of sight through the CM windows during rendezvous and docking. The lights are controlled with the EXTERIOR LTG switch. Before earth launch, this switch is set to DOCK to provide for future automatic turn-on of the docking lights. For transposition and docking, the docking lights are turned on by the normally open SLA/LM antenna transfer switch (located at SLA attachment points). This switch is automatically released to the closed position upon deployment of the spacecraft-Lunar Module adapter (SLA) panels. Upon transfer of power from the CM to the LM, the docking lights go off. Setting the EXTERIOR LTG switch to OFF interrupts the input power to the docking lights. The lights are visible, and their color recognizable, at a maximum distance of 1,000 feet.

2.10.2.1.2 Tracking Light.

The tracking light permits visual tracking of the LM from the CM. It is turned on by setting the EXTERIOR LTG switch to TRACK. A flash tube in the tracking light electronics assembly causes the light, which has a 60° beam spread, to flash at a rate of 60 flashes per minute.

2.10.2.1.3 Docking Target.

The docking target is a three-dimensional, self-illuminated standoff cross that is separated by a shaft from a circular base. Illumination is provided by radioluminescent disks, which outline the cross and circular-base markings. The docking target provides for visual alignment of the CSM to the LM during final docking maneuvers. (Refer to paragraph 2.11.6.2.)

2.10.2.2 Interior Lighting. (See figure 2.10-2.)

Interior lighting consists of integral EL panel and display lighting, backup floodlighting, RL lighting, and general ambient lighting. The color, brightness, and lighting method of the interior lights are listed in table 2.10-2. Interior lighting controls are located on the LIGHTING portion of panels 3 and 5.

2.10.2.2.1 Integrally Lighted Components.

There are three types of integrally lighted components: panel areas, displays, and caution and warning annunciators. The integrally lighted components use EL or incandescent devices that are controlled by on-off switches and potentiometer-type dimming controls. All panel placards are integrally lighted by white EL lamps with overlays. The displays have EL lamps within their enclosures. The numeric displays show green illuminated digits on a nonilluminated background. Displays with pointers show a nonilluminated pointer travelling over an illuminated background. The brightness of the EL displays can be controlled manually with potentiometer-type dimming controls. Each EL dimming control can be bypassed by a related override switch, so that full brightness is maintained should a dimming concontrol fail.

With the ANUN OVERRIDE switch (panel 5) set at OFF, the ANUN potentiometer of the triple-potentiometer ANUN/NUM dimming control adjusts the light intensity of the caution and warning annunciators (except the C/W PWR caution light), the component caution lights (except the DC FEEDER FAULT, and STAGE SEQ RELAY SYS A and SYS B lights), the incandescent pushbuttons, and the power failure indicator lights at the top of indicators on panels 1 and 2. The C/W PWR caution light goes on if a CWEA power supply failure is detected. For this reason, it is not affected by the ANUN/NUM dimming control. The DC FEEDER FAULT component caution light goes on if an EPS bus voltage failure is detected. For this reason, it, too, is not controlled by the ANUN/NUM dimming control. The STAGE SEQ RELAYS SYS A and SYS B component caution lights are connected directly to 5 volts dc and are not controlled by the ANUN/NUM dimming control. If the ANUN potentiometer of the dimming control fails, setting the ANUN OVERRIDE switch to ON routes 5-volt d-c power directly to the lights.

When the NUM OVERRIDE switch (panel 5) is set to OFF, power is provided to the NUM potentiometer of the ANUN/NUM dimming control. This potentiometer adjusts the light intensity of the EL numeric displays (except the DSKY). If the NUM potentiometer fails, setting the NUM OVERRIDE switch to ON bypasses the potentiometer and routes 115-volt a-c bus voltage directly to the numeric displays. The third potentiometer of the ANUN/NUM dimming control receives a voltage from the DSKY and routes a reduced voltage back to the DSKY to control the brightness of its numeric displays. There is no override capability to bypass this potentiometer.

The SIDE PANELS switches (panels 3 and 5) turn the EL lighting for the Commander's and LM Pilot's side panels on and off. With these switches set to ON, the integral side panel lights are connected to the INTEGRAL dimming control (panel 5) and the INTEGRAL OVERRIDE switch (panel 5). The INTEGRAL dimming control adjusts the light intensity of all EL panels when the INTEGRAL OVERRIDE switch is set to OFF. If the INTEGRAL dimming control fails, setting the INTEGRAL OVERRIDE switch to ON, bypasses the INTEGRAL dimming control and routes 115-volt a-c bus voltage directly to the EL panel lamps.

Two MASTER ALARM pushbutton/lights (panels 1 and 2) go on to alert the astronauts when a failure or out-of-tolerance condition is sensed by the CWEA. The signal that causes the MASTER ALARM pushbutton/lights to go on also activates an audio tone (3 kc) generator. Except when the C/W PWR caution light is on, pressing either MASTER ALARM pushbutton/light extinguishes the MASTER ALARM lights and deactivates the tone generator.

2.10.2.2.2 Lunar Contact Lights. (See figure 2.10-1A)

Both LUNAR CONTACT lights (panels 1 and 3) go on when one or more of the three lunar-surface sensing probes contacts the lunar surface. When on, the lights advise the crew to shut off the descent engine.

Each probe contains a pair of mechanically actuated switches that open when the probe contacts the lunar surface. Opening the +Y pair of switches removes the ground from, and applies forward bias voltage to, the bases of transistors 1Q1 and 1Q2, energizing relays 1K2 and 1K3. Contacts of 1K2 and 1K3 close to complete the ground circuit for both LUNAR CONTACT lights. Similarly, opening

the -Z or -Y pair of switches removes the ground from the bases of transistors 2Q1 and 2Q2, energizing relays 2K2 and 2K3. Contacts of 2K2 and 2K3 close to provide an additional ground for both LUNAR CONTACT lights.

The STAB/CONT: ATCA circuit breaker (panel 16) and the STAB/CONT: ENG CONT circuit breaker (panel 11) provide the 28-volt d-c power sources to the LUNAR CONTACT lights circuitry, through interlocking relays.

The interlocking relays ensure that the required voltages are available only when the descent engine is in operation. When descent engine-on relay contacts K16B are open, descent engine override relays 1K5 and 2K5 are energized; this energizes lunar probe relays 1K1 and 2K1, respectively. Thus, the required voltages are routed through relay contacts 1K1A and 2K1A instead of relay contacts 3K7A and 3K7B. When the descent engine is shut down, the interlocking relays become deenergized and the LUNAR CONTACT lights go off.

2.10.2.2.3 Floodlighting. (See figure 2.10-4.)

Floodlighting is used for general cabin illumination and as a secondary source of illumination for the control and display panels. Floodlighting is provided by the Commander's overhead and forward floodlights, the LM Pilot's overhead and forward floodlights, and recessed floodlights in the bottom of extending side panels and on the circuit breaker panels. These floodlight fixtures provide an even distribution of light with minimum reflection. For redundancy every panel area is illuminated more than one lamp.

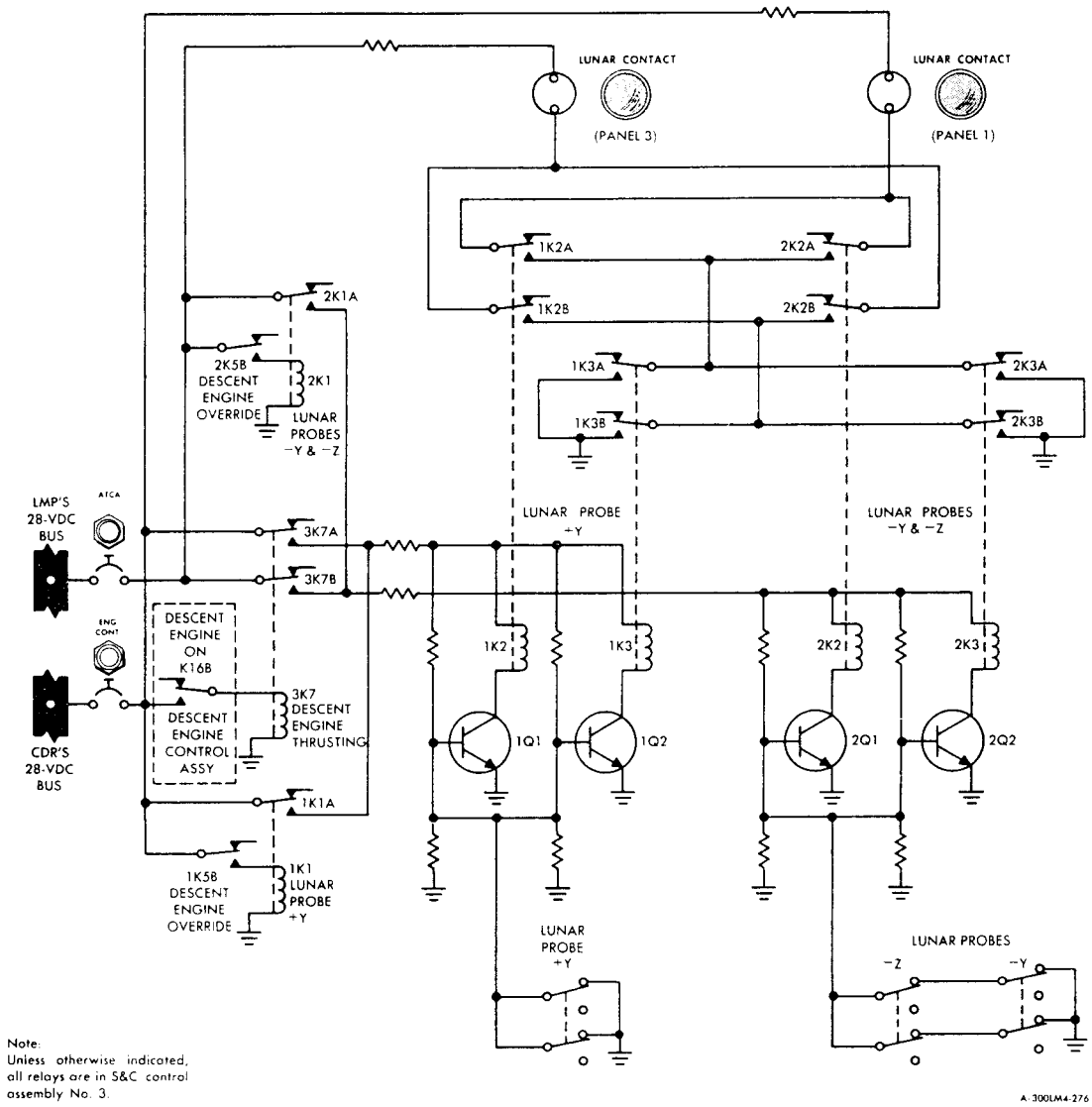

Note:
Unless otherwise indicated, all relays are in S&C control assembly No. 3.

Figure 2.10-1A. Lunar Contact Lights Circuits

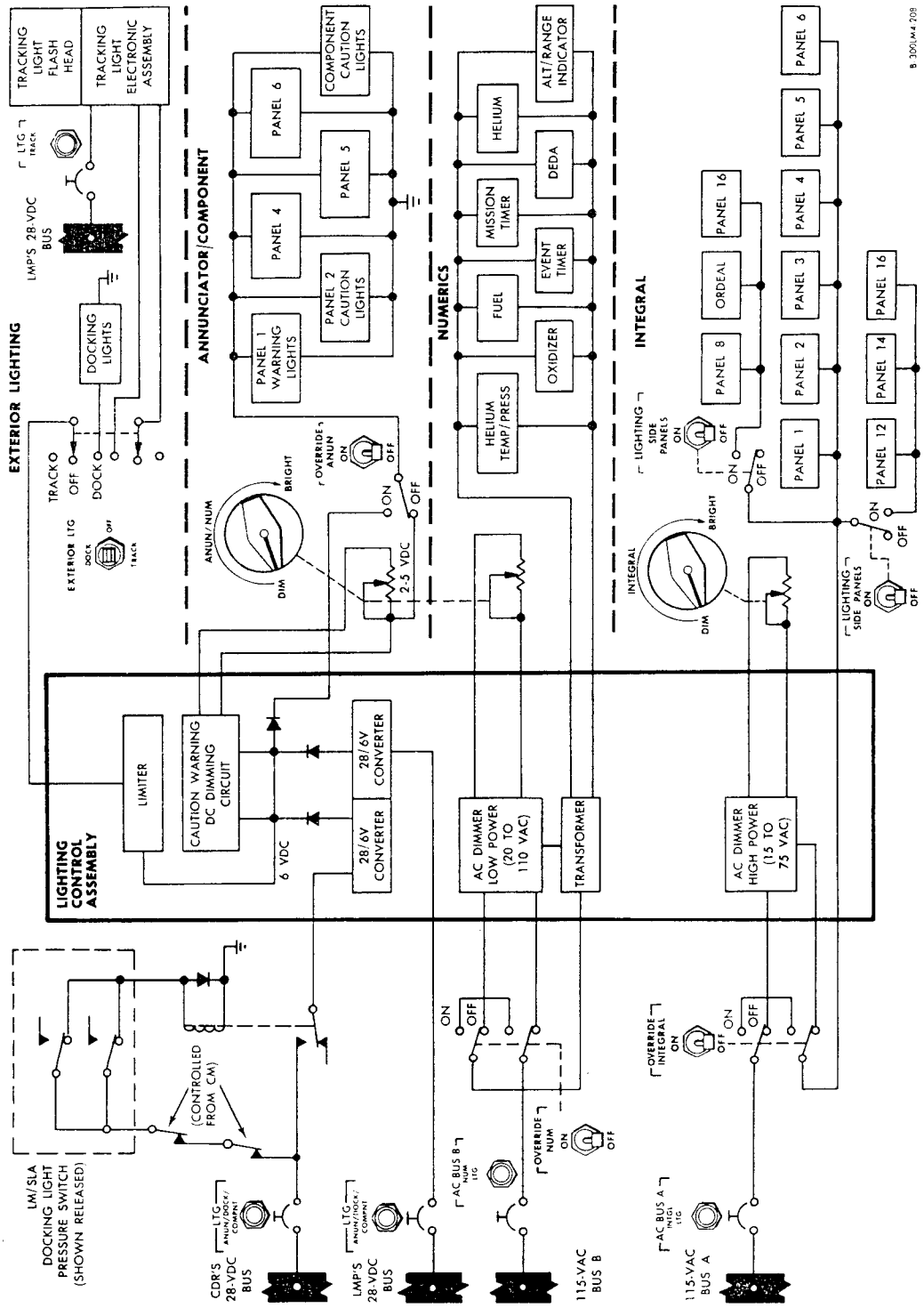

Figure 2.10-2. Lighting Circuits

Table 2.10-1. Exterior Lights - Color, Brightness, and Lighting Method

Component	Lighting Method	Color	Brightness at Rated Capacity	Brightness Adjustment
Docking target	Radioluminescent	Green	0.3 foot-lambert minimum (at time of launch)	Fixed
EVA handrail disks	Radioluminescent	Green	0.3 foot-lambert minimum (at time of launch)	Fixed
Landing gear down-lock mechanism	Phosphorescent	Red	-	Fixed
Docking lights				
Port	Incandescent	Aviation red	0.15 candlepower minimum	Fixed
Starboard	Incandescent	Aviation green	0.15 candlepower minimum	Fixed
Forward (2 lights)	Incandescent	Aviation white (+Y) Yellow (-Y)	0.23 candlepower minimum	Fixed
Aft	Incandescent	Aviation white	0.23 candlepower minimum	Fixed
Tracking light	Gaseous discharge	White	9,000 effective beam candlepower	Fixed

Table 2.10-2. Interior Lights - Color, Brightness, and Lighting Method

Component	Primary Lighting Method	Color	Brightness Adjustment	Color Under Incident Illumination
Control panels and pushbuttons (illuminated-character type)	Integral (EL) (primary)	White	Continuous from zero foot-lamberts	Control panels: gray Pushbuttons Background: black Characters: white
Floodlights	Flood (incandescent)	White (unfiltered)	Continuous from less than 0.1 foot-candle	
Circuit breakers	Flood (EL)	White	Continuous from zero foot-lamberts	Background: gray Characters: white
Numeric displays	Integral (EL)	Green	Continuous from zero foot-lamberts	Background: gray
LUNAR CONTACT lights	Integral (incandescent)	Blue	Fixed	Background: nonspecular gray
MASTER ALARM pushbutton/lights	Integral (incandescent)	Aviation red	Fixed (press to reset)	Background: translucent gray/white Legend: black
Caution lights	Integral (incandescent)	Aviation yellow	Continuous from less than 1.5 foot-lamberts	Background: translucent gray/white Legend: black
Warning lights		Aviation red		
Power failure indicator lights	Integral (incandescent)	Aviation red	Continuous from less than 0.5 foot-lambert	Translucent gray/white
Component caution lights	Integral (incandescent)	Aviation yellow	Continuous from less than 0.5 foot-lambert	Background: translucent gray/white Legend: black

Table 2.10-2. Interior Lights - Color, Brightness, and Lighting Method (cont)

Component	Primary Lighting Method	Color	Brightness Adjustment	Color Under Incident Illumination
Engine START pushbutton/light	Integral (incandescent)	Aviation red	Continuous from less than 0.5 foot-lambert	Background: translucent gray/white Legend: black with white letters
Engine stop pushbutton/lights				Background: translucent gray/white
Computer status condition indicator (DSKY and DEDA)	Integral (incandescent)	Aviation white	Continuous from zero foot-lamberts	Background: translucent gray/white
Computer caution condition indicator (DSKY)		Aviation yellow		Legends: black
Self-luminous devices (toggle switch tips)	Radio-luminescent	Green	Fixed	Pale green
Landing-point designator and, docking window reticles	Photo-luminescent	Green and Red	Fixed	Outer window: pale green Inner window: pale red
Talkbacks Two-position	Integral (EL)	1. - 2. Black and white stripes	Continuous from zero foot-lamberts	1. Gray 2. Black and white stripes
Three-position	Integral (EL)	1. - 2. Black and white stripes 3. Red	Continuous from zero foot-lamberts	1. Gray 2. Black and white stripes 3. Red
Interior pointers	Silhouette of EL flood			Black-yellow "Switzer" - rocket red or fire orange
Indicia (arrows, symbols, etc)	Integral (EL)	White	Continuous from zero foot-lamberts	Black - white
Characters (numbers and letters on displays)	Integral (EL)	White	Continuous from zero foot-lamberts	Black - white
Time-shared labels and multipliers (X10 indicator)	Integral (EL)	Green	Continuous from zero foot-lamberts	None
Range marking (color bands, normal mode)	Integral (EL)	Green	Continuous from zero foot-lamberts	Green
Immediate or emergency action controls	Integral (EL)	Yellow	Continuous from zero foot-lamberts	Alternate yellow and black striping, at 45° (Yellow is three times thickness of black.)

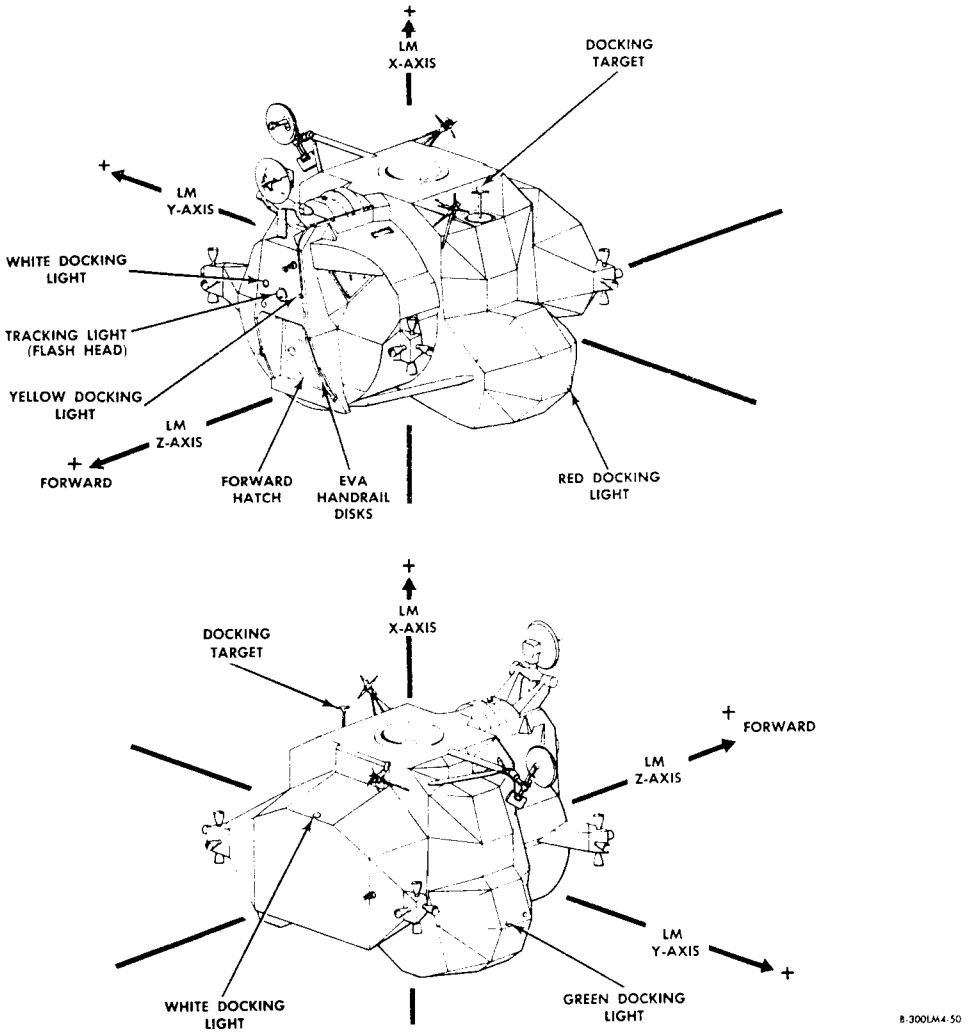

Figure 2.10-3. Exterior Lighting

When the SIDE PANELS switches are set to OFF, the Commander's and LM Pilot's side panel integral lighting is interrupted. Setting the FLOOD toggle switch (panel 3) to ALL routes 28 volts dc to the Commander's and LM Pilot's overhead and forward floodlights and to their side panel floodlights. The OVHD/FWD FLOOD dimming controls (panels 3 and 5) adjust the intensity of the LM Pilot's and Commander's respective overhead and forward floodlights. There is no intensity control for the side panels. Setting the FLOOD toggle switch to OVHD/FWD routes 28 volts dc to the Commander's and LM Pilot's overhead and forward floodlights only. With the FLOOD toggle switch set to OFF, all floodlights are off, unless the overhead hatch is open. The overhead hatch actuates a microswitch that overrides the FLOOD toggle switch and routes the 28-volt d-c bus voltage through the dimming controls to light the overhead and forward floodlights.

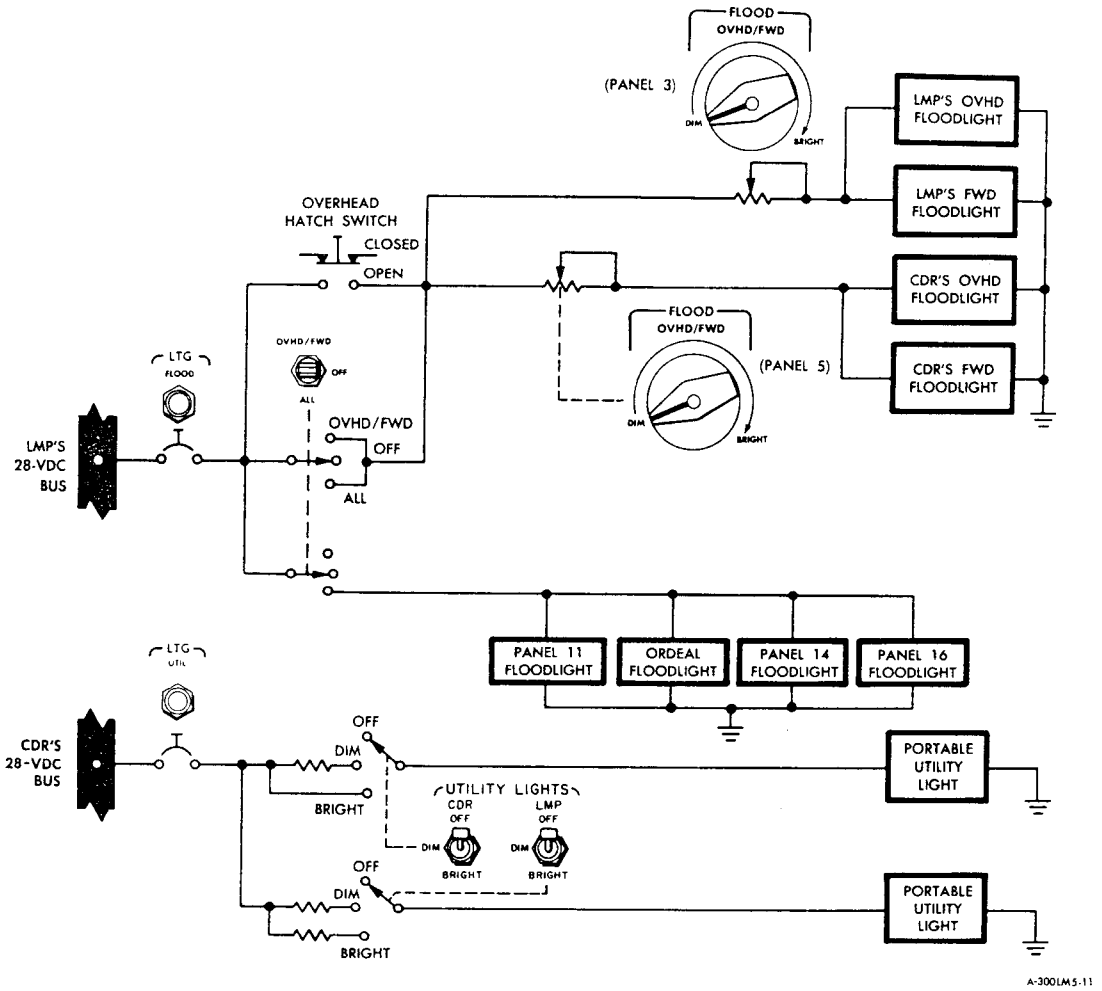

Figure 2.10-4. Floodlighting and Utility Lights - Simplified Diagram

2.10.2.2.4 Portable Utility Lights. (See figure 2.10-4.)

Two portable utility lights are used, when necessary, to supplement the cabin interior lighting. The lights, when removed from the interim stowage assembly, must be connected to the overhead utility lights panel. Power is applied to the connector from the CDR's 28-volt dc bus through the LTG: UTIL circuit breaker (panel 11) and the CDR and LMP UTILITY LIGHT switches on the overhead panel. The switches provide one-step dimming for the light-intensity control. The intensity of the brightness obtained with the CDR switch in the BRIGHT and DIM positions is greater than that obtained with the LMP switch.

2.10.2.2.5 Optical Sight Reticle Light.

The crewman's optical alignment sight (COAS), used to sight the docking target on the CM, has a reticle that is illuminated by a 28-volt d-c lamp. Power to the lamp, supplied by the CDR's 28-volt d-c bus, is routed through the FLIGHT DISPLAYS: COAS circuit breaker (panel 11) and the COAS switch (panel 8). (Refer to paragraph 2.11.6.1 for details.)

2.10.2.2.6 Alignment Optical Telescope Lights.

A thumbwheel on the computer control and reticle dimmer assembly controls the brightness of the AOT reticle. The lamp voltage is adjustable from 0.2±0.1 to 4.0±0.5 volts rms. The lamps edge-light the reticle with incandescent red light.

2.10.2.2.7 Lamp and Tone Test. (See figure 2.10-5.)

The LAMP/TONE TEST selector switch (panel 3) is used to perform a functional test of lights and the master alarm tone. The ALARM TONE position tests the MASTER ALARM pushbutton/lights and related tone. The C/W 1, C/W 3, and C/W 4 positions test the lamps of some of the caution and warning annunciators (panels 1 and 2). The ENG PB-C/W 2 position tests the lamps in the engine stop and START pushbutton/lights (panels 3 and 5) and the remainder of the caution and warning annunciators. The COMPNT position tests the component caution lights and the LUNAR CONTACT lights (panels 1 and 3).

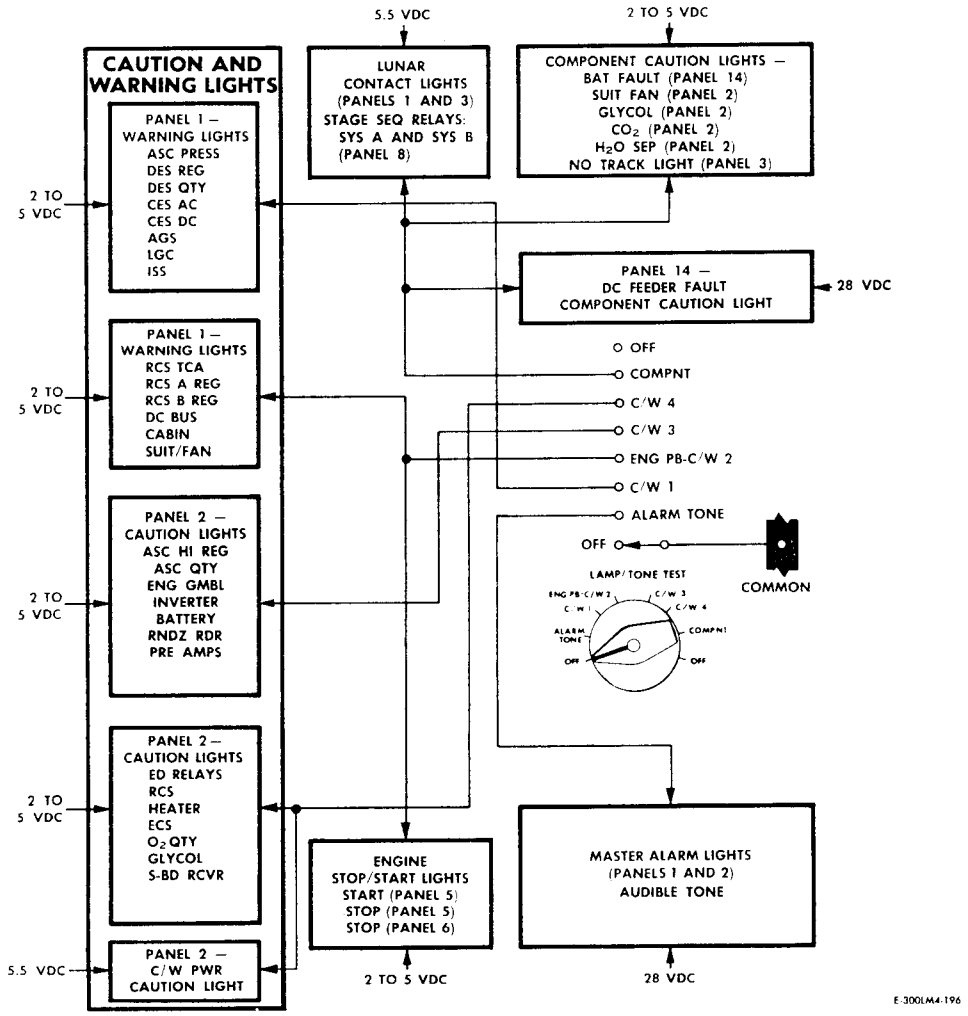

Figure 2.10-5. Lamp and Tone Test Circuits

2.10.3 PERFORMANCE AND DESIGN DATA.

The performance and design data for LM lighting are given in tables 2.10-3 and 2.10-4.

Table 2.10-3. Exterior Lights - Performance and Design Data

Tracking Light	
Type	High intensity, flashing
Intensity	9,000 beam candlepower (minimum)
Visibility	Cone centered on LM +Z-axis, with semivertex angle of 30°
	Visual: 10 to 140 nautical miles CSM sextant: 30 to 400 nautical miles
Docking lights	
Type	Incandescent
Intensity	Fixed
Visibility	1,000 feet (gross attitude) 200 feet (orientation)
Docking target	
Type	Self-luminous
Intensity	Fixed
EVA handrail disks	
Type	Self-luminous
Intensity	Fixed

Table 2.10-4. Interior Lights - Performance and Design Data

	Intensity	Power
Control panels and pushbuttons		
Primary	0.5±0.3 foot-lambert	75 volts, 400 cps
Backup	0.2 foot-candle (minimum)	24 volts dc
Circuit breakers	0.5±0.3 foot-lambert	75 volts, 400 cps
EL numeric readout	7 foot-lamberts (minimum)	115 volts, 400 cps (DSKY: 250 volts, 800 cps)
LUNAR CONTACT lights	50±10 foot-lamberts	5 volts dc
Caution and warning annunciators	30 to 60 foot-lamberts (one light operating) 12 foot-lamberts (5 lamps operating)	5 volts dc

Table 2.10-4. Interior Lights - Performance and Design Data (cont)

	Intensity	Power
MASTER ALARM pushbutton/lights	150±30 foot-lamberts	28 volts dc
DC BUS FAULT component caution light	8 to 18 foot-lamberts 3.1 foot-lamberts at threshold voltage	28 volts dc 18 volts dc threshold voltage
All other component caution lights	8 to 18 foot-lamberts	5 volts dc
Engine START and stop pushbutton/lights		
Incandescent	8 to 18 foot-lamberts	5 volts dc
EL	0.5±0.3 foot-lambert	75 volts, 400 cps
Computer status condition indicators (DSKY and DEDA)	15+13-7 foot-lamberts	5 volts dc
Self-luminous devices	0.05+0.03-0.04 foot-lambert	-
Talkbacks (two- and three-position)	0.5±0.3 foot-lambert	75 volts, 400 cps
Displays		
Characters and indicia	0.5±0.3 foot-lambert	75 volts, 400 cps
Labels and multipliers	7 foot-lamberts (minimum)	115 volts, 400 cps
Range markings	7 foot-lamberts (minimum)	75 volts, 400 cps
Immediate or emergency controls	0.1 foot-lambert (minimum)	75 volts, 400 cps
Indicator power failure lights	20±5 foot-lamberts	5 volts dc

2.10.4 OPERATIONAL LIMITATIONS AND RESTRICTIONS.

The operational limitations and restrictions for LM lighting are as follows:

- The tracking light should be turned off when the docking lights are visible. When docking, the tracking light is not visible; therefore, unnecessary power is used if it is left on.

2.11 CREW PERSONAL EQUIPMENT.

2.11.1 INTRODUCTION.

This subsection covers crew personal equipment, which includes equipment required for life support and astronaut safety, and accessories related to successful completion of the mission. The portable life support system (PLSS) oxygen and water recharge connectors interface with the Environmental Control Subsystem (ECS) for refills of oxygen and water. The pressure garment assembly (PGA) interfaces with the ECS for conditioned oxygen, through oxygen umbilicals; with the Communications Subsystem (CS) and Instrumentation Subsystem (IS) for communications and bioinstrumentation, through an electrical umbilical; and with the ECS for water supplied to the LCG, through a water umbilical. For stowage locations of crew personal equipment, refer to paragraph 2.11.8.

2.11.2 EXTRAVEHICULAR MOBILITY UNIT. (See figures 2.11-1, 2.11-2, and 2.11-3.)

The extravehicular mobility unit (EMU) provides life support in a pressurized or unpressurized cabin, and up to 7 hours of extravehicular activity (depending on the astronaut's metabolic rate).

In its extravehicular configuration, the EMU is a closed-circuit pressure vessel that envelops the astronaut. The environment inside the pressure vessel consists of 100% oxygen at a nominal pressure of 3.75 psia. The oxygen is provided at a flow rate of 6 cfm. The extravehicular life support equipment configuration includes the following:

- Liquid cooling garment
- Pressure garment assembly
- Integrated thermal micrometeoroid garment
- Portable life support system
- Oxygen purge system
- Communications carrier
- EMU waste management system
- EMU maintenance kit
- PLSS remote control unit
- Lunar extravehicular visor assembly
- Biomedical belt
- Extravehicular EV gloves

During intravehicular phases of the mission, several configurations are possible. The basic configuration provides intravehicular life support independent of the ECS. It includes the following:

- Pressure garment assembly (with PLSS)
- Integrated thermal micrometeoroid garment
- Communications carrier
- Constant-wear garment (not used in LM)
- Liquid cooling garment

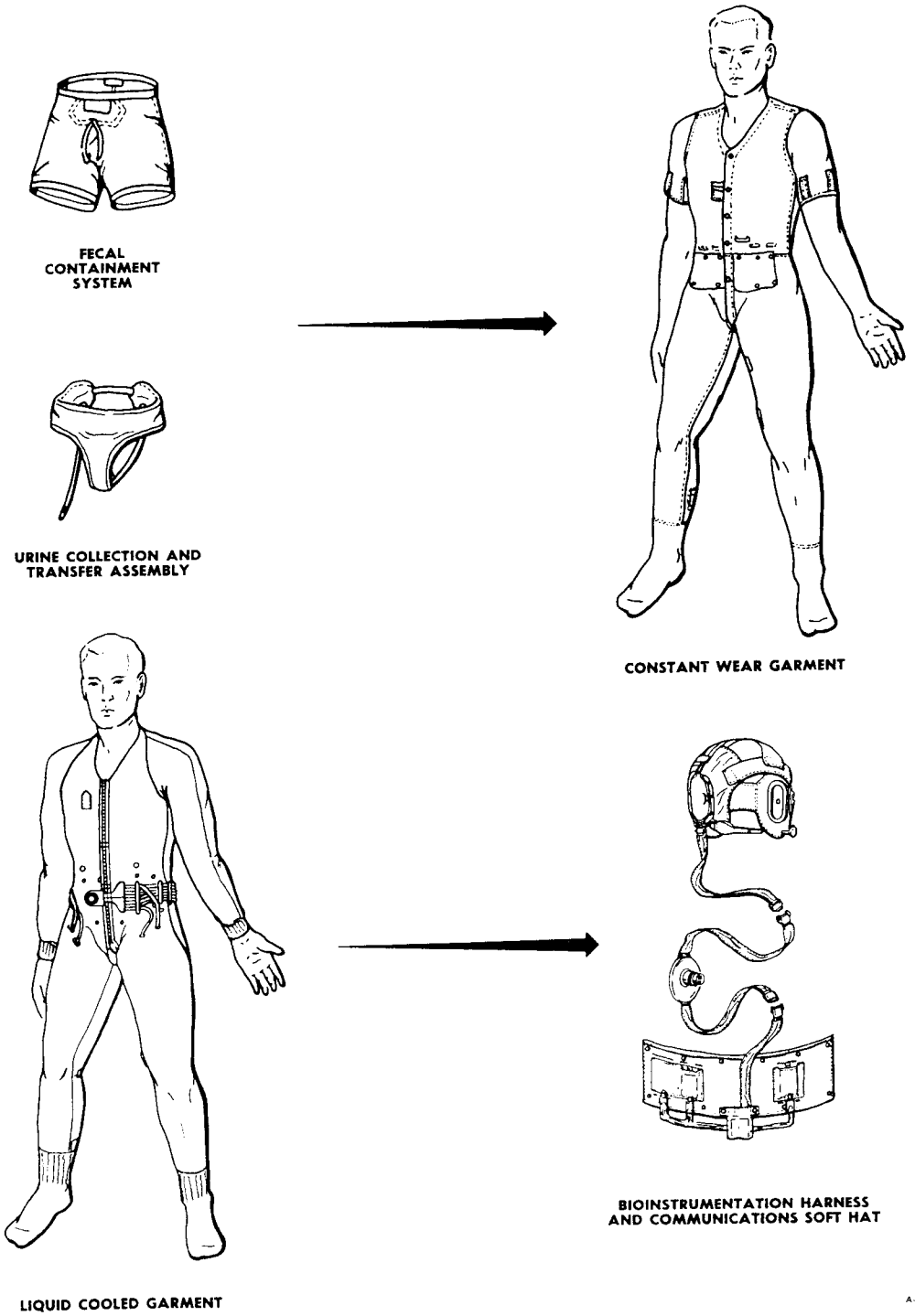

Figure 2.11-1. Extravehicular Mobility Unit

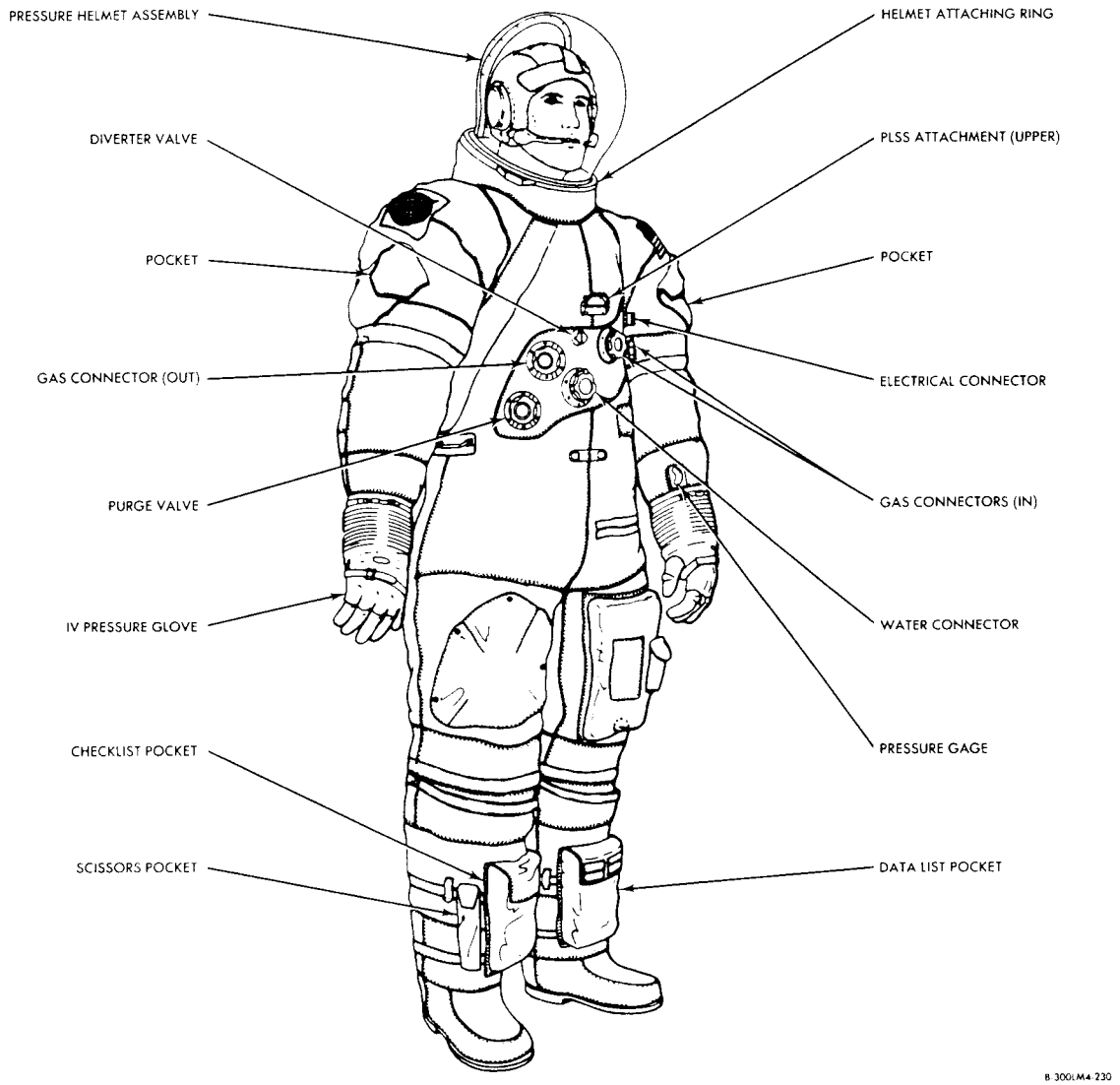

Figure 2.11-2. Pressure Garment Assembly

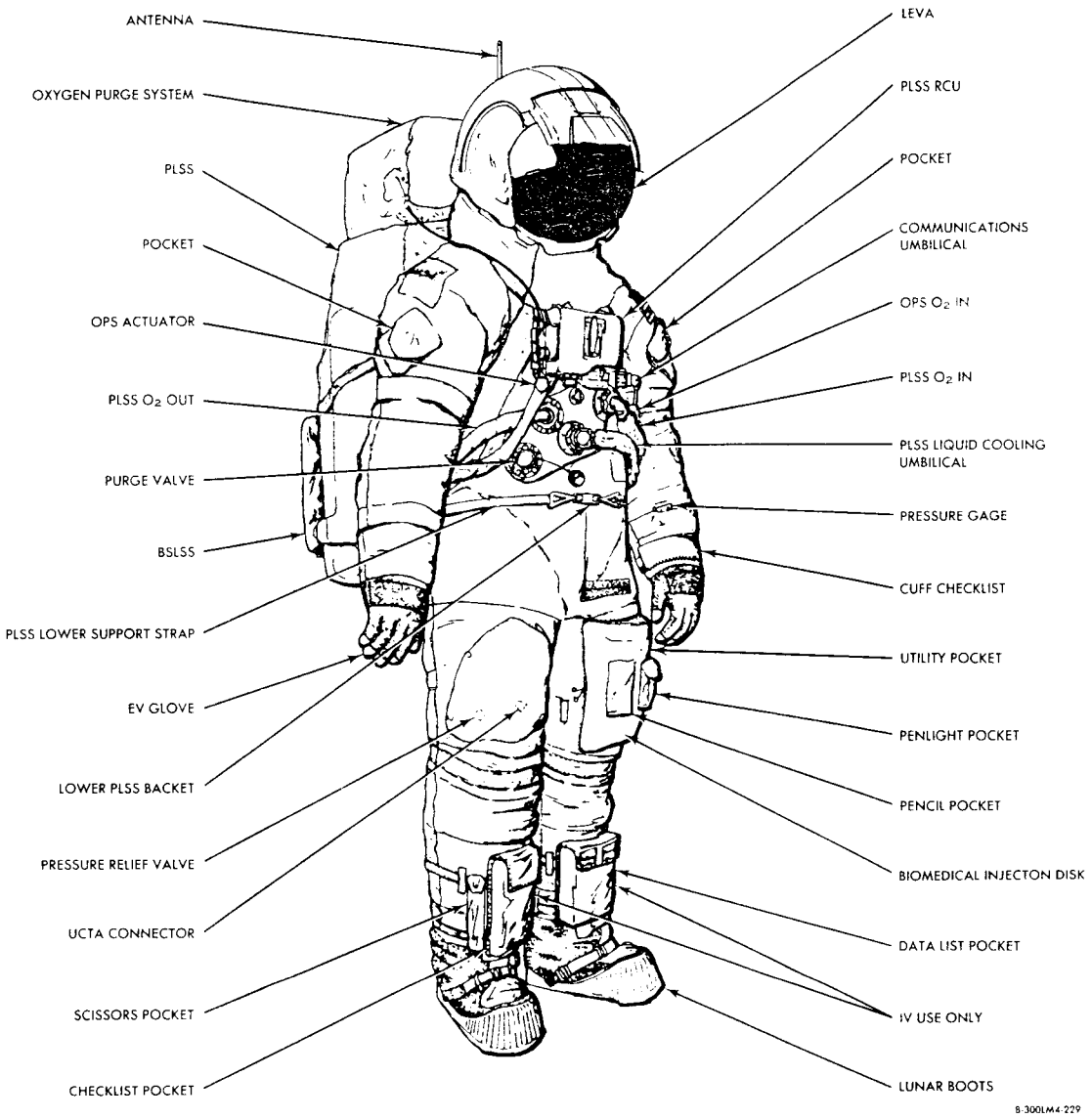

Figure 2.11-3. Integrated Micrometeoroid Garment, PLSS, OPS, and PLSS Control Unit

- Urine collection and transfer assembly
- Auxiliary equipment.

2.11.2.1 Liquid Cooling Garment. (See figure 2.11-1.)

The LCG is worn by the astronauts while in the LM and during all extravehicular activity. It cools the astronaut's body during extravehicular and intravehicular activity by absorbing body heat and transferring excessive heat to the sublimator in the PLSS or the ECS. The LCG is a one-piece, long-sleeved, integrated-stocking undergarment of netting material. It consists of an inner liner of nylon chiffon, to facilitate donning, and an outer layer of nylon Spandex into which a network of Tygon tubing is woven. The tubing does not pass through the stocking area. A double connector for incoming and outgoing water is located on the front of the garment. Cooled water, supplied from the PLSS or from the ECS, is pumped through the tubing. Pockets for bioinstrumentation signal conditioners are located around the waist. A zipper that runs up the front is used for donning and doffing the LCG; an opening at the crotch is used for urinating. Dosimeter pockets and snaps for attaching a biomedical belt are part of the LCG.

2.11.2.2 Pressure Garment Assembly. (See figures 2.11-2 and 2.11-3.)

The PGA is the basic pressure vessel of the EMU. It provides a mobile life-support chamber if cabin pressure is lost due to leaks or puncture of the vehicle. The PGA consists of a helmet, torso and limb suit, intravehicular gloves, and various controls and instrumentation to provide the crewman with a controlled environment. In an emergency, the PGA is designed to be worn for 115 hours at a regulated pressure of 3.75 ± 0.25 psig, in conjunction with the LCG.

2.11.2.2.1 Torso and Limb Suit.

The torso and limb suit is a flexible pressure garment that encompasses the entire body, except the head and hands. It has four gas connectors, a PGA multiple water receptacle, a PGA electrical connector, and a PGA urine transfer connector for the PLSS/PGA and ECS/PGA interface. The PGA connectors have positive locking devices; they can be connected and disconnected without assistance. The gas connectors comprise an oxygen inlet and outlet connector, on each side of the suit front torso. Each oxygen inlet connector has an integral ventilation diverter valve. The PGA multiple water receptacle, mounted on the suit torso, serves as the interface between the LCG multiple water connector, PLSS multiple water connector, and the ECS water supply. A protective external cover provides PGA pressure integrity when the LCG multiple water connector is removed from the PGA water receptacle. The PGA electrical connector, mated with the vehicle or PLSS electrical umbilical, provides a communications, instrumentation, and power interface to the PGA. The PGA urine transfer connector is used to transfer urine from the urine collection transfer assembly (UCTA) to the waste management system.

The PGA urine transfer connector, on the suit right leg, permits dumping the urine collection bag without depressurizing the PGA. A PGA pressure relief valve on the right-leg thigh vents the suit in the event of overpressurization. The pressure relief valve relieves pressure in excess of 5.4 psid. If the valve does not open, it can be manually overridden. A pressure gage on the left-arm wrist cone indicates suit pressure. A low-pressure warning-tone switch and pressure transducer are part of the PLSS equipment. C

2.11.2.2.2 Helmet.

The helmet is a Lexan (polycarbonate) shell with a bubble-type visor, a vent-pad assembly, and a helmet-attaching ring. The vent-pad assembly permits a constant flow of oxygen over the inner front surface of the helmet. The astronaut can turn his head within the helmet neck-ring area. The helmet does not turn independently of the torso and limb suit. The helmet has provisions on each side for mounting a lunar extravehicular visor assembly (LEVA). When the LM is unoccupied, the helmet protective bags are stowed on the cabin floor at the crew flight stations. Each bag has a hollow-shell plastic base with a circular channel for the helmet and the LEVA, two recessed holes for glove connector rings, and a slot for the EMU maintenance kit. The bag, made of Beta cloth, folds towards the plastic base when empty.

2.11.2.2.3 Intravehicular Gloves.

The intravehicular gloves are worn during operations in the LM cabin. The gloves are secured to the wrist rings of the torso and limb suit with a slide lock; they rotate by means of a ball-bearing race. Freedom of rotation, along with convoluted bladders at the wrists and adjustable antiballooning restraints on the knuckle areas, permits manual operations while wearing the gloves.

2.11.2.2.4 Controls.

All PGA controls are accessible to the crewman during intravehicular and extravehicular operations. The PGA controls comprise two ventilation diverter valves, a pressure relief valve with manual override, and a manual purge valve. For intravehicular operations, the ventilation diverter valves are open, dividing the PGA inlet oxygen flow equally between the torso and helmet of the PGA. During extravehicular operation, the ventilation diverter valves are closed and the entire 6.0-cfm oxygen flow enters the helmet. The pressure relief valve accommodates flow from a failed-open primary oxygen pressure regulator. If the pressure relief valve fails open, it may be manually closed. The purge valve interfaces with the PGA through the PGA oxygen outlet connector. Manual operation of this valve initiates an 8-pound-per-hour purge flow, providing carbon dioxide (CO_2) washout and minimum cooling during contingency or emergency operations.

2.11.2.2.5 Instrumentation.

A pressure transducer on the right cuff indicates pressure within the PGA. Biomedical instrumentation comprises an EKG (heart) sensor, ZPN (respiration rate) sensor, dc-to-dc converter, and wiring harness. The ZPN sensor is only operational with the spacecraft telemetry system. A personal radiation dosimeter (active) is attached to the integrated thermal micrometeoroid garment ITMG for continuous cumulative radiation readout. A chronograph wristwatch (elapsed-time indicator) is readily accessible to the crewman for monitoring.

2.11.2.3 Communications Carrier.

The communications carrier (cap) is a polyurethane-foam headpiece with two independent earphones and microphones, which are connected to the suit 21-pin communications electrical connector. The communications carrier is worn with or without the helmet during intravehicular operations. It is worn with the helmet during extravehicular operations.

2.11.2.4 Integrated Thermal Micrometeoroid Garment.

The ITMG is worn over the PGA. It protects the astronaut from harmful radiation, heat transfer, and micrometeoroid activity.

The ITMG is a one-piece, form-fitting multilayered garment that is laced over the PGA and remains with it. The LEVA, gloves, and boots are donned separately. From the outer layer in, the ITMG is made of a protective cover, a micrometeoroid-shielding layer, a thermal-barrier blanket (multiple layers of aluminized mylar), and a protective liner. A zipper on the ITMG permits connecting or disconnecting umbilical hoses.

2.11.2.4.1 Extravehicular Gloves.

For extravehicular activity, the PGA gloves are replaced with the extravehicular gloves. The extravehicular gloves are made of the same material as the ITMG to permit handling intensely hot or cold objects outside the cabin and for protection against lunar temperatures.

2.11.2.4.2 Extravehicular Boots.

For extravehicular activity, the extravehicular boots are worn over the PGA boots. They are made of the same material as the ITMG. The soles have additional insulation for protection against intense temperatures.

2.11.2.4.3 Lunar Extravehicular Visor Assembly. (See figure 2.11-4.)

The LEVA, which fits over the clamps around the base of the helmet, provides added protection against solar heat, space particles, solar glare, ultra-violet rays, and accidental damage to the helmet. The LEVA is comprised of a plastic shell, cover, hinge assemblies, three eyeshades (left, center and right), and two visors (protective and sun visors). The protective visor provides impact, infrared, and ultra-violet ray protection. This visor can be positioned anywhere between full up to full down. The sun visor has a gold coating which provides protection against light and reduced heat gain within the helmet. The sun visor can be positioned anywhere between full up and full down providing that the protective visor is lowered. The eyeshades, two located on each side and one in the center, reduce low-angle solar glare by preventing light penetration at the sides and overhead viewing areas. The LEVA can be attached or detached from the helmet without the aid of tools. A latching mechanism allows the lower rim of the LEVA to be tightened and secured around the neck area of the helmet. A LEVA for each astronaut is stowed in the LEVA helmet stowage bags and secured on the floor at his station during launch. When the LM is occupied, the LEVA'S are stowed in helmet stowage bags and secured on the ascent engine cover.

2.11.2.5 Portable Life Support System. (See figures 2.11-5 and 2.11-6.)

The PLSS is a self-contained, self-powered, rechargeable environmental control system. In the extravehicular configuration of the EMU, the PLSS is worn on the astornaut's back. The PLSS supplies pressurized oxygen to the PGA, cleans and cools the expired gas, circulates cool liquid in the LCG through the liquid transport loop, transmits astronaut biomedical data, and functions as a dual VHF transceiver for communication.

The PLSS has a contoured fiberglass shell to fit the back, and a thermal micrometeoroid protective cover. It has three control valves, and, on a separate control unit, two control switches, a volume control, and a five-position switch for the dual VHF transceiver. The remote control unit is set on the chest, below the neck ring.

Fully charged, the equipment can assimilate an average astronaut output of 1,600 Btu per hour with peak rates of 2,000 Btu per hour. The PLSS can operate for 7 hours, depending upon the astronaut's metabolic rate, before the oxygen and feedwater must be replenished, the battery and lithium hydroxide (LiOH) cartridge must be replaced, and condensate discharged. The basic systems and loops of the PLSS are: primary oxygen subsystem, oxygen ventilation loop, feedwater loop, liquid transport loop, and electrical system.

The PLSS attaches to the astronaut's back, over the ITMG; it is connected by a shoulder harness assembly. When not in use, it is stowed on the floor or in the left-hand midsection. To don the PLSS, the astronaut backs against the pack, makes PGA and harness connections, and unhooks the PLSS straps from the overhead attachment.

2.11.2.5.1 Primary Oxygen Subsystem. (See figure 2.11-6.)

The primary oxygen subsystem is rechargeable. It provides regulated oxygen for the oxygen ventilation loop. The subsystem consists of a primary oxygen bottle, recharge connector, primary oxygen regulator assembly, and associated instrumentation.

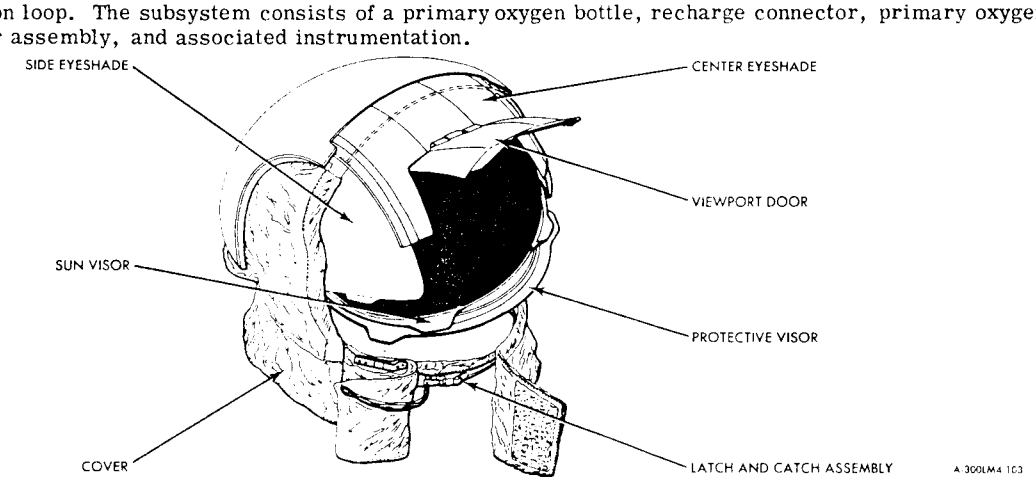

Figure 2.11-4. Lunar Extravehicular Visor Assembly

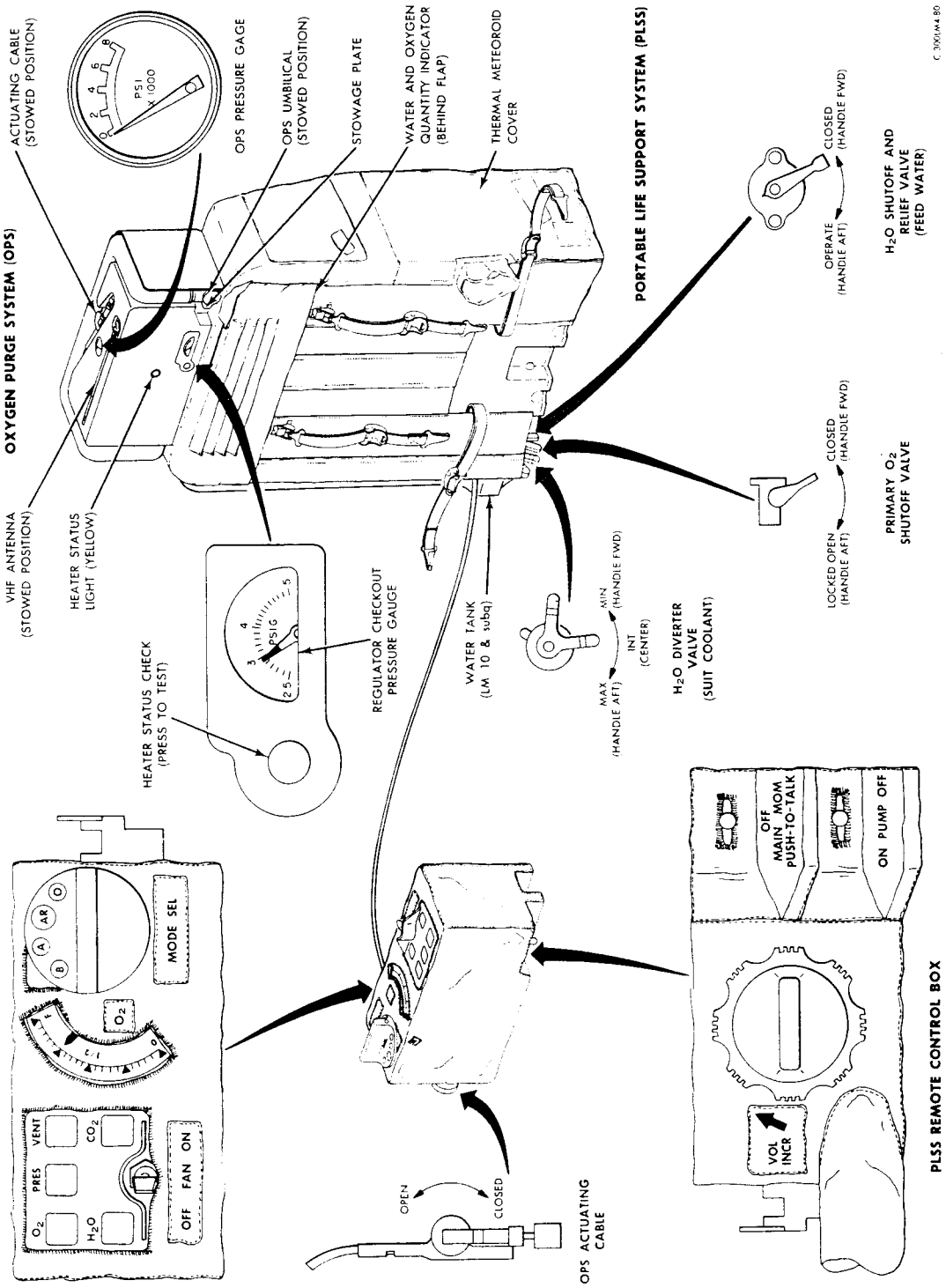

Figure 2.11-5. PLSS Controls and Indicators

Primary Oxygen Bottle. The oxygen bottle contains 1.0 pound of usable oxygen, at 900 psia and +65°F. This supply provides adequate makeup oxygen for a 1,200-Btu/hr metabolic load and to compensate for EMU leakage for 4 hours of extravehicular activity. Recharge time from a 900 ± 50-psig source, at 0° to +60°F, is 1 hour.

Primary Oxygen Regulator Assembly. The primary oxygen regulator assembly is a single-stage unit that regulates the oxygen ventilation loop at 3.75 ± 0.15 psig. It is used with the oxygen purge subsystem (OPS) during purge operation. A flow-limiting orifice upstream of the regulator valve restricts flow to 3.6 lb/hr to protect the PGA against overpressurization if the regulator fails open. All oxygen flow from the primary oxygen subsystem is controlled manually with the primary oxygen shutoff valve.

Instrumentation. A high-oxygen-flow-rate sensor activates an audible 3-kc warning tone when the flow rate exceeds 0.62 lb/hr. The primary oxygen bottle contains two independent pressure transducers that provide separate signals for telemetry and crew visual readout. In addition, two independent pressure transducers monitor PGA pressure: one provides telemetry data; the other, activates an audible 1.5-kc warning tone when PGA pressure drops below 3.15 ± 0.05 psia.

2.11.2.5.2 Oxygen Ventilation Loop. (See figure 2.11-6.)

The oxygen ventilation loop is a closed-loop system that reconditions and recirculates oxygen through the PGA. The loop consists of a contaminant control assembly, a section of a porous plate sublimator, a water separator, a fan/motor assembly, two PLSS oxygen connectors, and instrumentation.

Contaminant Control Assembly. This assembly contains an expendable LiOH and charcoal cartridge that filters foreign particles and removes carbon dioxide and odors from the oxygen ventilation loop. The cartridge is rated at 1,200 Btu/hr for a 4-hour operational lifetime.

Sublimator and Water Separator. A section of the porous plate sublimator dissipates heat and condenses excess water from the oxygen ventilation loop. The water separator removes the entrained water and directs it to the drain water section of the feedwater reservoir. The maximum water separation rate is 0.54 lb/hr at 2,000 Btu/hr.

Fan/Motor Assembly. A centrifugal-type fan, operating at 18,000 ± 600 rpm, circulates oxygen at 6.0 cfm between the PLSS and PGA. The fan is powered by a 16.0 ± 0.8-volt brushless d-c motor. The heat generated by the motor is transferred to the liquid transport loop by the fan cooling jacket heat exchanger.

PLSS Oxygen Connectors. The PLSS oxygen connectors provide an interface between the oxygen ventilation loop and the PGA inlet and outlet gas connectors.

Instrumentation. A low-ventilation-flow-rate sensor activates an audible 1.5-kc warning tone when the oxygen flow rate drops below 5 ± 0.3 cfm.

CP

2.11.2.5.3 Feedwater Loop. (See figure 2.11-6.)

The feedwater loop is rechargeable. It supplies expendable water to the sublimator and stores condensation removed by the water separator. The loop consists of a reservoir; water fill, vent, and drain connectors; a water shutoff and relief valve; sublimator; and instrumentation.

Feedwater Reservoir and Vent Connector. The reservoir is a bladder-type tank that provides 8.40 ± 0.25 pounds of expendable feedwater for sublimation. Drainwater from the water separator is stored in the volume between the reservoir housing and bladder. The combination of stored drainwater and oxygen ventilation loop pressure provides the necessary differential pressure to expel feedwater from the bladder. The bladder contains a vent line for removal of entrapped gas to assure a full charge.

Water Shutoff and Relief Valve. When open, this manually operated valve allows feedwater to flow to the sublimator. When closed, the valve acts as a pressure relief device to prevent feedwater reservoir overpressurization. The valve relieves at 58.5 ± 6.5 psig and resets at 40.0 psig.

Water Fill and Drain Connectors. These connectors allow access to both sides of the reservoir bladder to facilitate recharging and draining. Because the reservoir contains a bladder, filling and draining are performed simultaneously. Recharge time from a 40-psig source is 15 minutes.

Sublimator. The sublimator transfers heat, by conduction, from the liquid transport loop and the oxygen ventilation loop cooling passages to the feedwater loop passages. The heat in the feedwater is then dissipated by sublimation of ice.

Instrumentation. A pressure transducer provides systems telemetry monitoring to identify sublimator breakthrough and feedwater reservoir low level.

2.11.2.5.4 Liquid Transport Loop. (See figure 2.11-6.)

The liquid transport loop is a recirculating loop that provides thermal control of the EMU by dissipating heat through sublimation. The loop consists of a water accumulator, water fill connector, pump/motor assembly, water diverter valve, a section of the porous plate sublimator, a multiple water connector, and instrumentation.

Water Accumulator and Fill Connector. The accumulator maintains makeup transport water at an outlet pressure between 11.9 and 20.0 psig. The water fill connector permits initial charging of the loop and topping-off the accumulator charge between extravehicular excursions. A recharge key required for recharging the accumulator is stowed in the EMU maintenance kit.

Pump/Motor Assembly. A vibrating-diaphragm-type pump imparts a coolant flow rate of 4.0 ± 0.2 lb/min through the liquid transport loop. A 16.8 ± 0.8-volt brushless d-c motor operating at 9,000 ± 300 rpm powers the pump, creating a pressure rise of 5.65 ± 0.30 psig.

Water Diverter Valve. The water diverter valve is a manually operated, three-way, three-position valve. It regulates the coolant flow rate through the sublimator to provide thermal control for the liquid transport loop. In the minimum and intermediate positions, the valve diverts the flow so that most of the water bypasses the sublimator. In the maximum position, the entire flow passes through the sublimator before returning to the LCG. The sublimator and bypass flow rates are as follows:

Diverter Valve Position	Sublimator Flow Rate (lb/min)	Bypass Flow Rate (lb/min)
Maximum	4.0 ± 0.1	0
Intermediate	0.5 ± 0.05	3.5 ± 0.05
Minimum	0.25 ± 0.05	3.75 ± 0.05

Sublimator. The porous plate sublimator contains liquid transport loop passages and provides thermal control through sublimation of ice.

PLSS Multiple Water Connector. This connector interfaces with the PGA multiple water receptacle, providing a single PGA penetration with dual passages to the LCG.

Instrumentation. The water accumulator contains a dip-stick-type indicator that shows the water level. The liquid transport loop has three individual temperature transducers that monitor LCG water inlet temperature and LCG water differential temperature to provide telemetry data.

2.11.2.5.5 Electrical Power Subsystem. (See figure 2.11-6.)

The PLSS electrical power subsystem provides d-c power to the fan/motor and pump/motor assemblies, communications, and instrumentation. The power is supplied by a 16.8 ± 0.8-volt, 11-cell, silver-zinc alkaline battery rated at 14.3 ampere-hours. This provides 4 hours of nominal operation at

3.75 amperes and 60 watts. Current limiters protect the electrical circuits against overcurrent. The power consumption is as follows:

Space suit communicator (including all transducers, indicators, and microphones)	11.55 watts
Pump	10.0 watts
Fan	30.0 watts

EMU Electrical Connectors. (See figure 2.11-7.) During EMU checkout and recharge, the crewman is required to make and break the following electrical connectors:

PLSS	PGA
J-3 PLSS battery connector	J-7 communication connector
J-4 PLSS electrical umbilical connector	J-8 biomedical connector
J-5 PLSS antenna connector	J-9 PGA electrical connector

The following two connectors provide an interface between the space suit communicator and the two terminal boxes. They do not require crew action.

J-1 terminal box A-1	J-2 terminal box A-2

Current Limiters. For PLSS/EVCS current limiter values, refer to the EMU AOH, Volume I (System Description), CSD-A-789-(1).

Instrumentation. The battery current and voltage transducers share the same telemetry frequency. Manual actuation of the mode selector switch on the PLSS remote control unit determines which transducer output is being telemetered.

2.11.2.5.6 Extravehicular Communications System. (See figures 2.11-5 and 2.11-6.)

The extravehicular communication system (EVCS) has the following basic capabilities:

- Simultaneous and continuous telemetry from two extravehicular astronauts
- Duplex voice communications between earth and one or both extravehicular astronauts
- Uninterruptable voice communications between the astronauts
- Provides 30 telemetry channels, 30 x 1 1/2 PAM for each extravehicular communicator (EVC); 26 channels are for status information
- Provides separate subcarrier frequencies for continuously monitoring each EKG during EVA
- Generates an audible alarm for 10±2 seconds if an unsafe condition occurs. (If the EVC mode selector switch position is changed, this warning tone comes on again for 10±2 seconds if the condition still exists.)

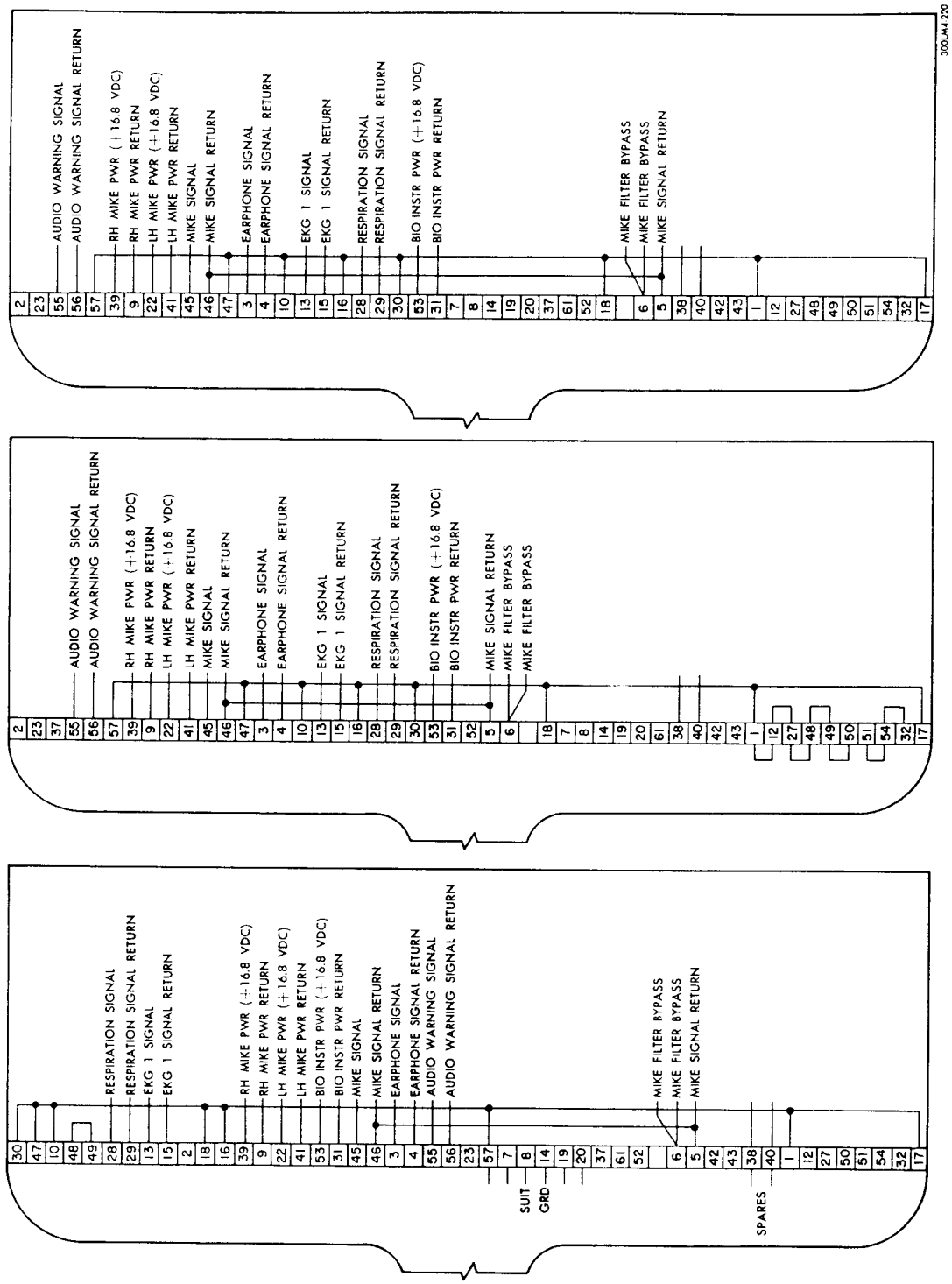

Figure 2.11-7. EMU Electrical Connectors

The EVCS consists of a pair of extravehicular communicators (EVC-1 and EVC-2), which are an integral part of the PLSS. The EVC-1 consists of two AM transmitters, two AM receivers, one FM receiver, signal-conditioning circuits, a telemetry system, a warning system, and other components required for system operation. The EVC-2 is similar to the EVC-1, except that it has an FM transmitter instead of an FM receiver.

Each EVC is controlled with a four-position switch. (See figure 2.11-5.) The O position is the off position; AR, for dual-mode operation; and A and B, for primary- and secondary-mode operation, respectively.

The dual mode is the normal operating mode. In this mode, the EVC-2 transmits a 0.3- to 2.3-kc voice signal and two interrange instrument group subcarriers (3.9 and 7.35 kc) via a 279-mc FM transmitter. The transmitter has an unmodulated output in excess of 500 mw. The composite signal from the EVC-2 is received at EVC-1, mixed with a 0.3- to 2.3-kc voice signal and two interrange instrument group subcarriers (5.4 and 10.5 kc), and transmitted to the LM on a 259.7-mc AM link. This composite signal of voice and four subcarriers is then relayed from the LM to earth via S-band. The EVC-2 also receives EVC-1 output (which includes the original EVC-2 transmission) via a 259.7-mc receiver; thus, a duplex link between the two extravehicular astronauts is established. Communications signals are transmitted from earth to the LM via S-band and are then relayed to both astronauts on the 296-mc AM link.

The outputs of the FM and AM receivers are summed with an attenuated input voice signal and applied to the earphones. The audio output levels of both receivers are individually controlled by separated volume controls on the RCU affixed to the chest of the PGA. The input voice signal is attenuated 10 db to provide a sidetone for voice-level regulation.

The dual mode provides uninterruptable duplex voice communications between the astronauts and the LM-earth linkup, plus simultaneous telemetry from each astronaut via relay through the EVC-1. If a malfunction occurs in the dual mode, the system has backup in the primary and secondary modes. Both EVC's should never be in the primary or secondary modes simultaneously. Severe distortion and interference will occur, and communications will be temporarily lost.

In the primary and secondary modes, duplex voice communication is maintained between the two astronauts and the LM. The secondary mode has no telemetry capability. Also, the secondary-mode transmitter is inoperative unless activated by the voice-operated switch or the manual switch. The dual- and primary-mode transmitter is continually operative.

In all modes of operation, the telemetry systems provide a warbling 1.5-kc tone to warn of high oxygen flow, low vent flow, low PGA pressure, and low feedwater pressure. The tone alerts the astronaut to check his remote control unit for a visual indication of the problem area. Each telemetry system can accommodate as many as 26 commutated channels at 1-1/2 samples per second, and one EKG channel. Data accuracy is 2% rms.

The LM communication relay unit (LCRU) enables the communication relay to MSFN via S-band.

2.11.2.5.7 PLSS Remote Control Unit.

The PLSS remote control unit is a chest-mounted instrumentation and controls unit. It has a fan switch, pump switch, SSC mode selector switch, volume control, PLSS oxygen quantity indicator, five status indicators, and an interface for the OPS actuator.

2.11.2.6 Oxygen Purge System.

The OPS is a self-contained, independently powered, high-pressure, nonrechargeable emergency oxygen system that provides 30 minutes of regulated purge flow. The OPS consists of two interconnected spherical high-pressure oxygen bottles, an automatic temperature control module, an oxygen pressure regulator assembly, a battery, an oxygen connector, and checkout instrumentation. In the normal extravehicular configuration, the OPS is mounted on top of the PLSS and is used with PLSS

systems during emergency operations. In the contingency extravehicular configuration, the OPS is attached to the PGA front lower torso and functions independently of the PLSS. The OPS has no communications capability, but provides a hard mount for the SSC VHF antenna. Two OPS's are stowed in the LM.

2.11.2.6.1 OPS Oxygen Bottles.

The OPS oxygen bottles contain a total of 4 pounds of usable oxygen at 7,500±750 psig. This supply provides a 30-minute operational lifetime at a purge flow rate of 8 pounds per hour.

2.11.2.6.2 OPS Oxygen Pressure Regulator Assembly.

This assembly is a single-stage, variable-orifice regulator that regulates PGA inlet oxygen pressure to 3.45±0.25 psig. The regulator has an inline heater and automatic temperature control module to offset the adiabatic expansion cooling of the oxygen and to maintain PGA inlet oxygen temperature between +50° and +80° F. The manually operated OPS oxygen shutoff valve is mechanically coupled to the heater switch.

2.11.2.6.3 OPS Battery.

The battery supplies 27 volts dc to the 116-watt heater and automatic temperature control module. The battery is rated at 2.5 ampere-hours.

2.11.2.6.4 OPS Oxygen Connectors.

The OPS connector interfaces with the PGA inlet gas connector. The GSE fill connector is used only for initial ground charge.

2.11.2.6.5 OPS Instrumentation.

The regulator and heater have preoperational checkout systems. The OPS pressure gage monitors the OPS oxygen bottles and is used for ground fill and preoperational checkout. The gage verifies regulated flow (8 pounds per hour) through an orifice mounted on the stowage plate. The heater circuitry is checked before egress, with a momentary-contact switch which, when actuated, causes a yellow light to go on to indicate circuit continuity.

2.11.2.6.6 PLSS Condensate Transfer. (See figure 2.11-8.)

PLSS condensate transfer and PLSS feedwater recharge occur simultaneously. When the PLSS is recharged with water, it forces condensate waste out through the PLSS drain port and the transfer hose into the PLSS condensate transfer assembly. The condensate waste comes in contact with the air-water separator and germicide. The separator prevents the waste liquid from entering the cabin. The germicide prevents biological contamination of the lunar surface. The transfer hose can be connected to the vent connector to bleed off the nitrogen bubble, thus enabling topping off the PLSS to full capacity. The PLSS condensate transfer assembly can be quickly disconnected and jettisoned to the lunar surface.

2.11.2.7 EMU Maintenance Kit.

The EMU maintenance kit consists of an accumulator key for the PLSS, lubricant, spare O-rings, and patching tape for repair of the EMU. The kit is stowed in the helmet stowage bag until needed for extravehicular activity.

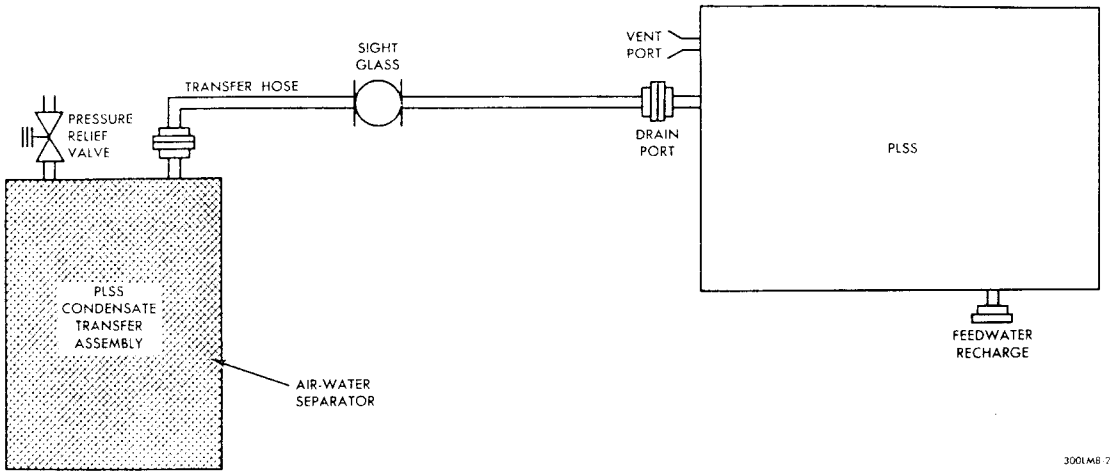

Figure 2.11-8. PLSS Condensate Transfer - Schematic Diagram

2.11.3 UMBILICAL ASSEMBLY.

The umbilical assembly consists of hoses and connectors for securing the PGA to the ECS, CS, and IS. Separate oxygen, electrical, and water umbilicals connect to each astronaut. A buddy umbilical system is provided for extravehicular-activity emergency.

2.11.3.1 Oxygen Umbilical.

The oxygen umbilical consists of silicone rubber hoses (1.25-inch inside diameter) with wire reinforcement. The connectors are of the quick-disconnect type, with a 1.25-inch, 70° elbow at the PGA end. Each assembly is made up of two hoses and a dual-passage connector at the ECS end and two separate hoses (supply and exhaust) at the PGA end. When not connected to the PGA, the ECS connector end remains attached and the hoses stowed.

2.11.3.2 Electrical Umbilical.

The electrical umbilical carries voice communications and biomedical data, and electrical power for warning tone impulses.

2.11.3.3 Buddy System Umbilical. (See figure 2.11-9.)

The buddy system umbilical is used by the EVA's if oxygen or water flow fails in either PLSS. If PLSS oxygen flow fails the OPS is turned on to provide approximately 50% flow and the buddy umbilical is used to circulate water coolant to the other PGA (a function formerly performed by OPS flow). This enables conservation of oxygen. If water flow fails in one PLSS, the buddy umbilical is also used to restore the water cooling function.

Use of the buddy umbilical to provide alternative functions if these failures occur, increases the EVA walkback limit to 2 kilometers.

The buddy umbilical, approximately 9 feet long, permits an effective distance of 5 feet between the EVA's. When use of the buddy umbilical is required, the extravehicular activity is aborted and the astronauts must return to the LM.

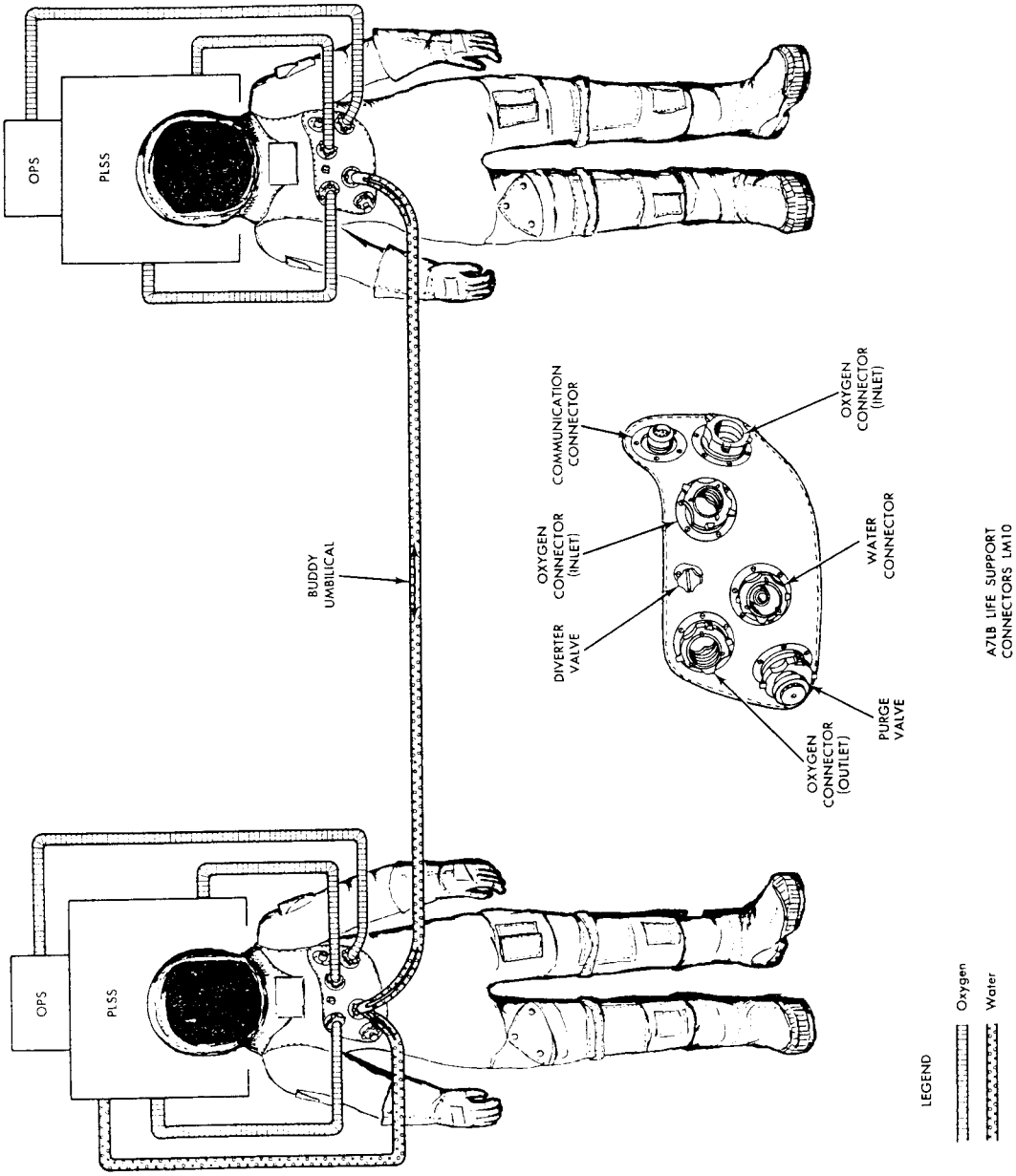

Figure 2.11-9. Buddy System, Schematic Diagram

2.11.4 CREW LIFE SUPPORT.

The crew life support equipment includes food and water, a waste management system, personal hygiene items, and medical equipment for in-flight emergencies. A potable-water unit and food packages contain sufficient life-sustaining supply for completion of the LM mission.

2.11.4.1 Crew Water System.

The water dispenser assembly consists of a Trevarno mounting bracket, a coiled hose, and a trigger-actuated water dispenser. The hose and dispenser extend approximately 72 inches to dispense water from the ECS water feed control assembly. The ECS water feed control valve is opened to permit water flow. The dispenser assembly supplies water at +50° to +90° F for drinking, food preparation, and fire extinguishing. The water dispenser is inserted directly into the mouth for drinking. Pressing the trigger-type control supplies water.

2.11.4.2 Food Preparation and Consumption

The astronaut's food supply (approximately 2,500 calories per man per day) includes liquids and solids with adequate nutritional value and low waste content. Food packages are stowed in the LM midsection, and in the left-hand side stowage compartment (LHSSC) of LM 8.

The food is vacuum-packed in plastic bags that have one-way poppet valves into which the water dispenser can be inserted. Another valve allows food passage for eating. The food bags are packaged in aluminum-foil-backed plastic bags for stowage and are color coded: red (breakfast), white (lunch), and blue (snacks).

Food preparation involves reconstituting the food with water. The food bag poppet-valve cover is cut with scissors and pushed over the water dispenser nozzle after its protective cover is removed. Pressing the water dispenser trigger releases water. The desired consistency of the food determines the quantity of water added. After withdrawing the water dispenser nozzle, the protective cover is replaced and the dispenser returned to its stowage position. The food bag is kneaded for approximately 3 minutes, after which the food is considered reconstituted. After cutting off the neck of the food bag, food can be squeezed into the mouth through the food-passage valve. A germicide tablet, attached to the outside of the food bag, is inserted into the bag after food consumption, to prevent fermentation and gas formation. The bag is rolled to its smallest size, banded, and placed in the waste disposal compartment.

2.11.4.3 EMU Waste Management System.

The EMU waste management system provides for the disposal of body waste through use of a fecal containment system and a urine collection and transfer assembly, and for neutralizing odors. Personal hygiene items are stowed in the left-hand stowage compartment.

2.11.4.3.1 Waste Fluid Transfer.

Waste fluids are transferred to small waste fluid collector assemblies by a controlled difference in pressures between the PGA and cabin (ambient).

A waste storage container in the descent stage provides urine stowage, PLSS condensate stowage, and gas separation. The size and skin thickness (and therefore the weight) of the container are minimized because the pressure caused by accumulated gases are vented to the lunar environment. Biological contamination of the lunar surface is avoided by incorporation of a germicide in the container and a bacteria filter at the vent port. An electrical heater and a pressure control valve prevent ice accumulation at the inlet and vent ports. A urine receptacle (stowed) in the cabin) collects urine by direct interface with the crew.

The quick-disconnect on the urine receptacle and the overboard dump line contains a self-sealing valve. This feature enables cabin pressure to be retained when the quick-disconnect is broken. In addition, a safety pressure cap on the hose quick-disconnect provides a redundant method of

preventing loss of cabin atmosphere. The hose assembly also mates with the vent and drain ports of the PLSS for water recharge. PLSS condensate is transferred to the descent stage container, using the pressure available at the PLSS to effect the transfer.

2.11.4.3.2 Fecal Device.

The fecal containment system consists of an outer fecal/emesis bag (one layer of Aclar) and a smaller inner bag. The inner bag has waxed tissue on its inner surface. Polyethylene-backed toilet tissue and a disinfectant package are stored in the inner bag.

To defecate, the astronaut removes the inner bag from the outer bag. After unfastening the PGA and removing undergarments, the waxed tissue is peeled off the bag's inner surface and the bag is placed securely over the anal area. After defecating, the used toilet tissue is deposited in the used bag and the disinfectant package is pinched and broken inside the bag. The used bag is then closed, kneaded, and inserted in the outer bag. The wax paper is removed from the adhesive on the fecal/emesis bag, it is sealed, then placed in the waste disposal compartment.

2.11.4.4 Personal Hygiene Items.

Personal hygiene items consist of wet and dry cleansing cloths, chemically treated and sealed in plastic covers, and packs of teeth-cleansing, ingestable chewing gum. The cloths measure 4 by 4 inches and are folded into 2-inch squares. They are stored in the food package container along with the chewing gum.

2.11.4.5 Medical Equipment.

The medical equipment consists of biomedical sensors, personal radiation dosimeters, and emergency medical equipment.

2.11.4.5.1 Bioinstrumentation.

Biomedical sensors gather physiological data for telemetry. Government-furnished impedance pneumographs continuously record heart beat (EKG) and respiration rate. Each assembly (one for each astronaut) has four electrodes which contain electrolyte paste; they are attached with tape to the astronaut's body.

2.11.4.5.2 Personal Radiation Dosimeters.

Six dosimeters are provided for each astronaut. They contain thermoluminescent powder, nuclear emulsions, and film that is sensitive to beta, gamma, and neutron radiation. They are placed on the forehead or right temple, chest, wrist, thigh, and ankle to detect radiation to eyes, bone marrow, and skin. Serious, perhaps critical, damage results if radiation dosage exceeds a predetermined level. For quick, easy reference each astronaut has a dosimeter mounted on his EMU. Dosimeters are government-furnished equipment.

2.11.4.5.3 Emergency Medical Equipment.

The emergency medical equipment consists of a kit of six capsules: four pain killers (Darvon) and two pep pills (Dexedrine). For LM 8 and LM 9, the kit is attached to the forward exterior side of the flight data file; for LM 10 and subsequent, at the left-hand midsection, readily accessible to both astronauts. The emergency medical equipment is government furnished.

2.11.5 CREW SUPPORT AND RESTRAINT EQUIPMENT. (See figure 2.11-10.)

The crew support and restraint equipment includes armrests, handholds (grips), Velcro on the floor to interface with the boots, and a restraint assembly operated by a tensioned rope-and-pully arrangement that secures the astronauts in an upright position under zero-g conditions.

2.11.5.1 Armrests.

The armrests, at each astronaut station, provide stability for operation of the thrust/translation controller assembly and the attitude controller assembly, and restrain the astronaut laterally. The armrests are adjustable (four positions) to accommodate the astronaut; they also have stowed (fully up) and docking (fully down) positions. The armrests, held in position by spring-loaded detents, can be moved from the stowed position by grasping them and applying downward force. Other positions are selected by pressing latch buttons on the armrest forward area. Shock attenuators are built into the armrests for protection against positive-g forces (lunar landing). The maximum energy absorption of the armrest assembly is a 300-pound force, which will cause a 4-inch armrest deflection.

2.11.5.2 Handholds.

The handholds, at each astronaut station and at various locations around the cabin, provide support for the upper torso when activity involves turning, reaching, or bending; they attenuate movement in any direction. The forward panel handholds are single upright, peg-type, metal grips. They are fitted into the forward bulkhead, directly ahead of the astronauts, and can be grasped with the left or right hand.

2.11.5.3 Restraint Assembly.

The restraint assembly consists of cables, restraint rings, and a constant-force reel system. The cables attach to D-rings on the PGA sides, waist high. The constant-force reel control provides a downward force of approximately 30 pounds; it is locked during landing and docking operations. When the constant-force reel is locked, the cables are free to reel in. A ratchet stop prevents paying out of the

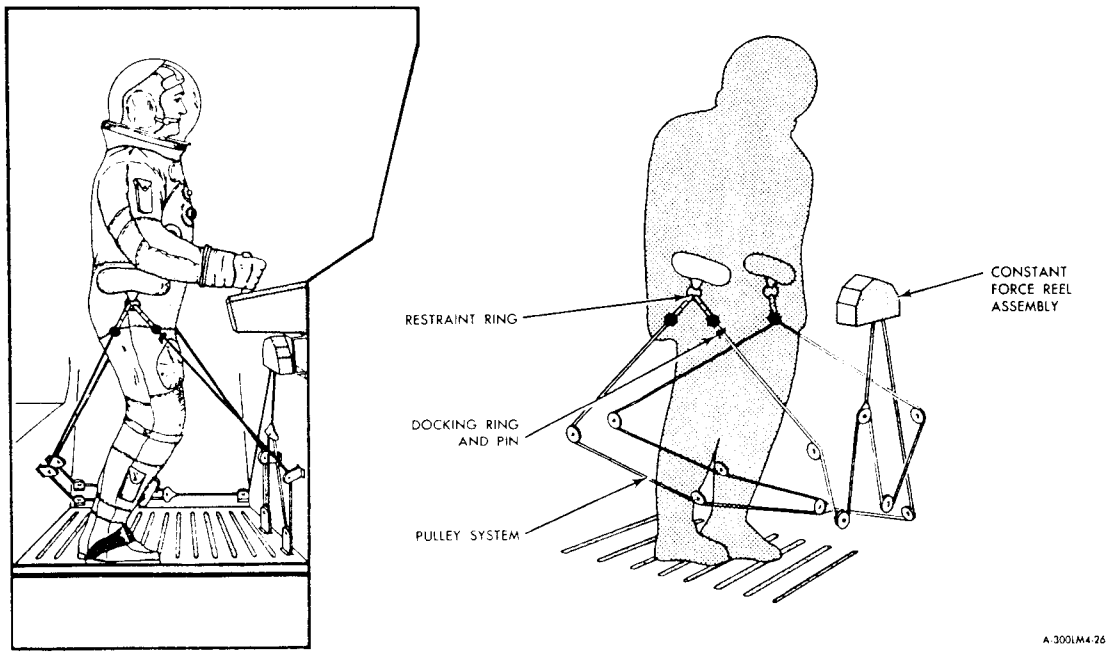

Figure 2.11-10. Restraint Equipment

cables and thus provides lunar-landing restraint. Docking pins on the Commander's restraint cables may be used during docking maneuvers. Inserted into panel 5, they enable the Commander to maintain his equilibrium while leaning backwards to use the crewman optical alignment sight (COAS) at the overhead (docking) window.

2.11.6 DOCKING AIDS AND TUNNEL HARDWARE.

Docking operations require special equipment and tunnel hardware to effect linkup of the LM with the CSM. Docking equipment includes the COAS and a docking target. A drogue assembly, probe assembly, the CM forward hatch, and hardware inside the LM tunnel enable completion of the docking maneuver.

2.11.6.1 Crewman Optical Alignment Sight. (See figure 2.11.11.)

The COAS provides the Commander with gross range cues and closing rate cues during the docking maneuver. The closing operation, from 150 feet to contact, is an ocular, kinesthetic coordination that requires control with minimal use of fuel and time. The COAS provides the Commander with a fixed line-of-sight attitude reference image, which appears to be the same distance away as the target.

The COAS is a collimating instrument. It weighs approximately 1.5 pounds, is 8 inches long, and operates from a 28-volt d-c power source. The COAS consists of a lamp with an intensity control, a reticle, a barrel-shaped housing and mounting track, and a combiner and power receptacle. The reticle has vertical and horizontal 10° gradations in a 10° segment of the circular combiner glass, on an elevation scale (right side) of -10° to +31.5°. The COAS is capped and secured to its mount above the left window (position No. 1).

To use the COAS, it is moved from position No. 1 to its mount on the overhead docking window frame (position No. 2) and the COAS switch (panel 8) is set from OFF to OVHD. The intensity control is turned clockwise until the reticle appears on the combiner glass; it is adjusted for required brightness.

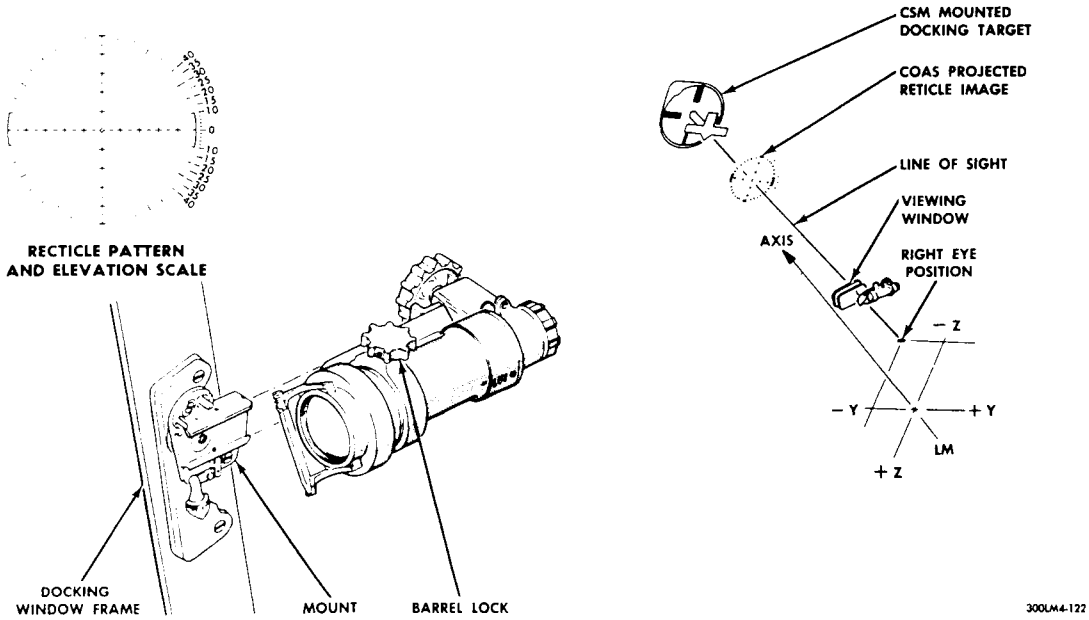

Figure 2.11-11. Crewman Optical Alignment Sight

2.11.6.2 Docking Target. (See figure 2.11-12.)

The docking target permits docking to be accomplished on a three-dimensional alignment basis. The target is located at the intersection of +Y46.3 and +Z203; it does not protrude beyond the LM launch configuration envelope or the maximum contact envelope. The target consists of an inner circle and a standoff cross of black with self-illuminating disks within an outer circumference of white. The target-base diameter is 17.68 inches. The standoff cross is centered 15 inches higher than the base and, as seen at the intercept, is parallel to the X-axis and perpendicular to the Y-axis and the Z-axis.

2.11.6.3 Drogue Assembly.

The drogue assembly consists of a conical structure mounted within the LM docking tunnel. It is secured at three points on the periphery of the tunnel, below the LM docking ring. The LM docking ring is part of the LM midsection outer structure, concentric with the X-axis. The drogue assembly can be removed from the CM end or LM end of the tunnel.

Basically, the assembly is a three-section aluminum cone that is secured with mounting lugs to the LM tunnel ring structure. A lock and release mechanism, on the probe, controls capture of the CM probe at CM-LM contact. Handles are provided to release the drogue from its tunnel mounts.

2.11.6.4 Tunnel Hardware.

The tunnel contains hardware essential to final docking operations. This includes connectors for the electrical umbilicals, docking latches, probe-mounting lugs, tunnel lights, and deadfacing switches.

2.11.6.5 Probe Assembly.

The probe assembly provides initial CM-LM coupling and attenuates impact energy imposed by vehicle contact. The probe assembly may be folded for removal and for stowage within either end of the CM transfer tunnel.

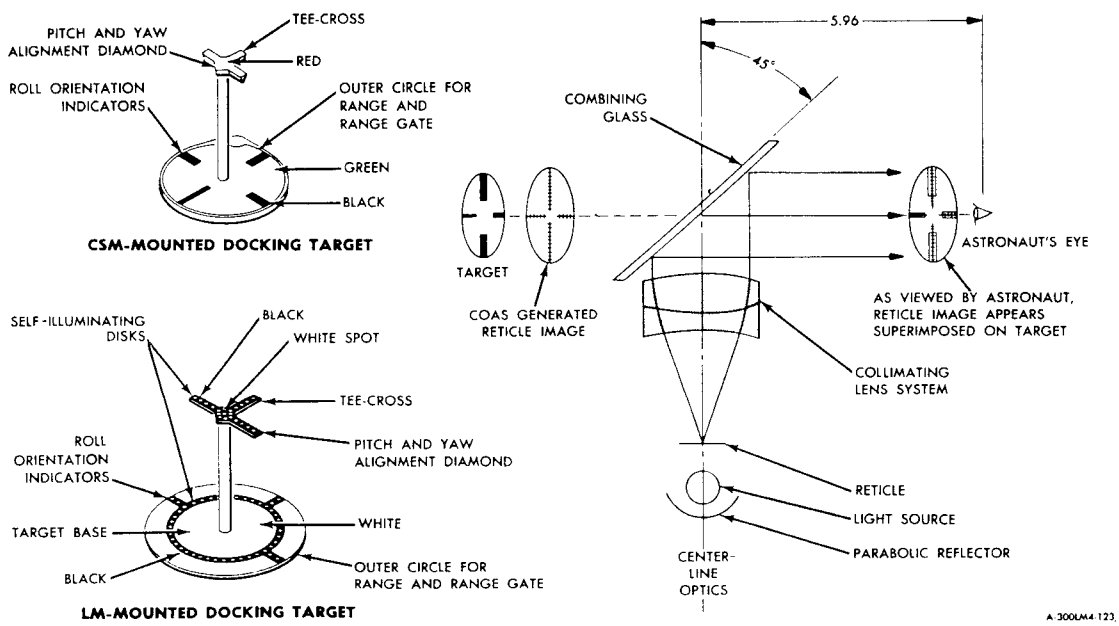

Figure 2.11-12. COAS Functional Schematic and Docking Targets

2.11.6.6 CM Forward Hatch.

The CM tunnel has two forward hatches: an inner (forward pressure) hatch and an outer (forward thermal) hatch. The forward pressure hatch can be removed into the CM crew compartment. The hatch is retained at the aft end of the CM tunnel by a latching mechanism whose linkage is driven from the crew compartment by a handle. A socket opposite the handle, on the tunnel side of the pressure hatch, permits hatch removal from the LM side.

The CM forward thermal hatch can be removed from the tunnel, into the CM crew compartment or into the LM. The hatch is retained at the forward end of the CM tunnel by an expanding peripheral latching mechanism, which also serves as a water barrier. The linkage that operates the mechanism is driven by an off-center handle, from the CM crew compartment side, and by a socket, using emergency tool B, on the LM side. The thermal hatch is reinstalled from the CM side only; three of the 12 docking latches have expendable stops, which position the thermal hatch axially for proper engagement of the latching mechanism. The CM thermal hatch is stowed in the CM right equipment bay, within a thermal stowage bag.

2.11.7 CREW MISCELLANEOUS EQUIPMENT.

Miscellaneous equipment required for completion of crew operations consists of in-flight data with checklists, emergency tool B, and window shades.

2.11.7.1 In-flight Data.

The in-flight data are provided in three polyethylene-coated packages. The Commander's checklist and the in-flight data kit are stowed in the flight data file compartment. The packages include the flight plan, experiments data and checklist, mission log and data book, systems data book, and star charts.

2.11.7.2 Tool B. (See figure 2.11-13.)

Tool B (emergency wrench) is a modified Allen-head L-wrench. It is 6.25 inches long and has a 4.250-inch drive shaft with a 7/16-inch drive. The wrench can apply a torque of 1,475 inch-pounds; it has a ball-lock device to lock the head of the drive shaft. The wrench is stowed on the right side stowage area inside the cabin. It is a contingency tool for use with the probe and drogue, and the CM hatch from outside. Tool B is also used for CM forward hatch operations from the LM side only.

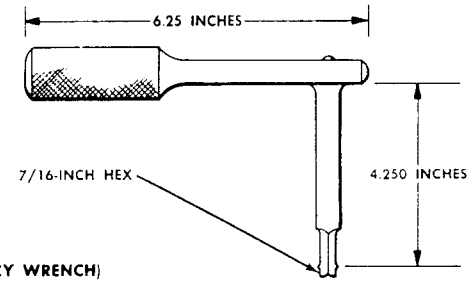

TOOL B (EMERGENCY WRENCH)

300LM4-176

Figure 2.11-13. Tool B

2.11.7.3 Window Shades.

Window shades are used for the overhead docking window and forward windows. The window shade material is Aclar with a deposit of inconel; light transmissibility is approximately 0.1%, with high reflectivity on the surface facing outside the cabin. The shade is secured at the bottom (rolled position). To cover the window, the shade is unrolled, flattened against the frame area and secured with Velcro.

2.11.8 MODULARIZED EQUIPMENT STOWAGE ASSEMBLY. (See figures 2.11-14 through 2.11-17.)

The modularized equipment stowage assembly (MESA) is located on quad 4 of the descent stage. It is deployed by the extravehicular astronaut when the LM is on the lunar surface. The MESA contains fresh PLSS batteries and LiOH cartridges, a TV camera, tripod, cable, tools for obtaining lunar geological samples, containers in which to store the samples, and other scientific devices. It contains a folding work table that also serves as a bracket on which the equipment transfer bag, used to transfer the PLSS batteries and LiOH cartridges to the cabin, is hung.

In addition, four portable pallets are provided upon which items such as batteries, LiOH cartridges, a LM communication relay unit (LCRU), food, a stereo cassette container, an azimuth-elevation unit, and a cosmic-ray plate experiment bag are fastened. These pallets facilitate access, transfer, and handling of stowed items.

The PLSS LiOH cartridges and batteries are temperature-sensitive. To prevent exceeding the minimum allowable temperature, there are heaters on these items (see figure 2.11-17.) Low-emissivity coatings on exposed MESA surfaces, and a segmented insulation blanket, are also provided.

2.11.9 STOWAGE.

Figures 2.11- and 2.11- show forward and aft views of the LM cabin.

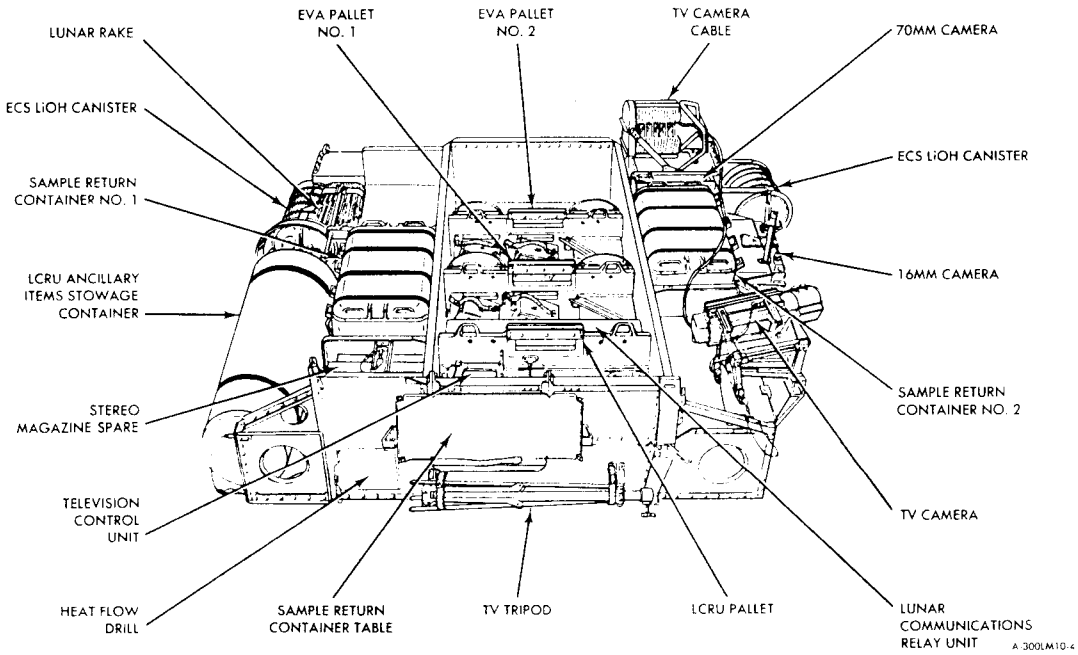

Figure 2.11-14. Modularized Equipment Stowage Assembly

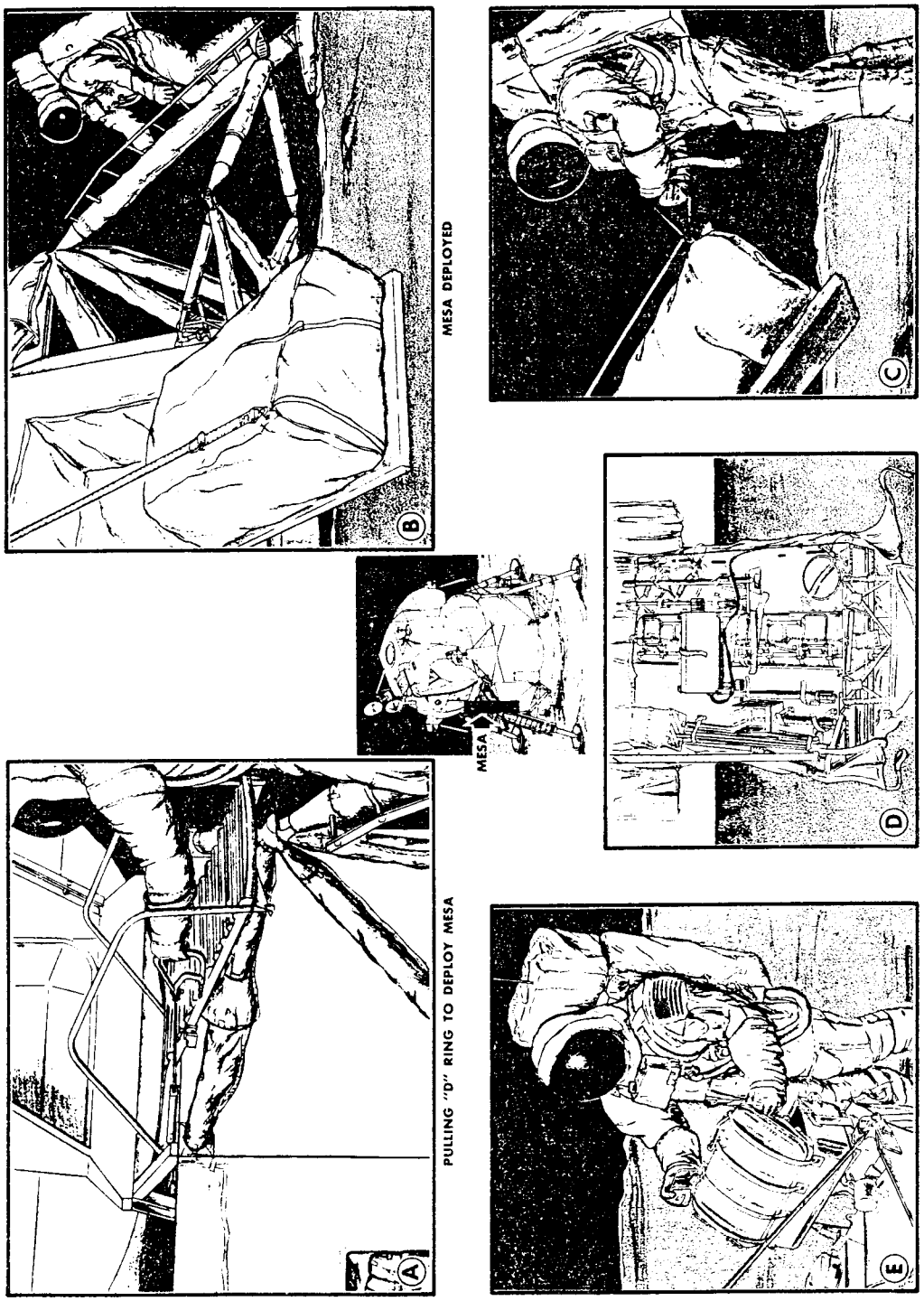

Figure 2.11-15. Deployment of Modularized Equipment Stowage Assembly

ASTRONAUT PLACING EQUIPMENT TRANSFER BAG ON MESA TABLE

ASTRONAUT STOWING LiOH CARTRIDGE IN EQUIPMENT TRANSFER BAG

ASTRONAUT PLACING LUNAR SAMPLE IN SAMPLE RETURN CONTAINER

300LM6-21

Figure 2.11-16. Modularized Equipment Stowage Assembly Application

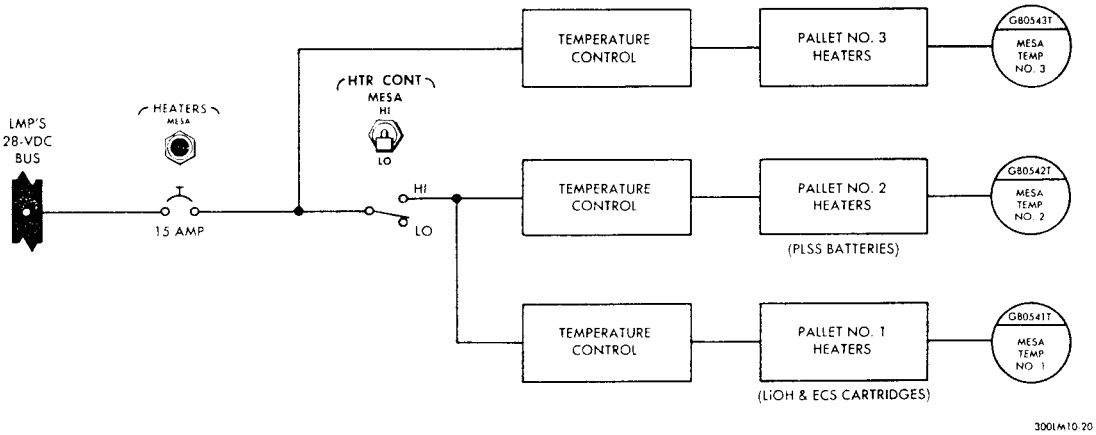

Figure 2.11-17. Modularized Equipment Stowage Assembly Heater Circuits

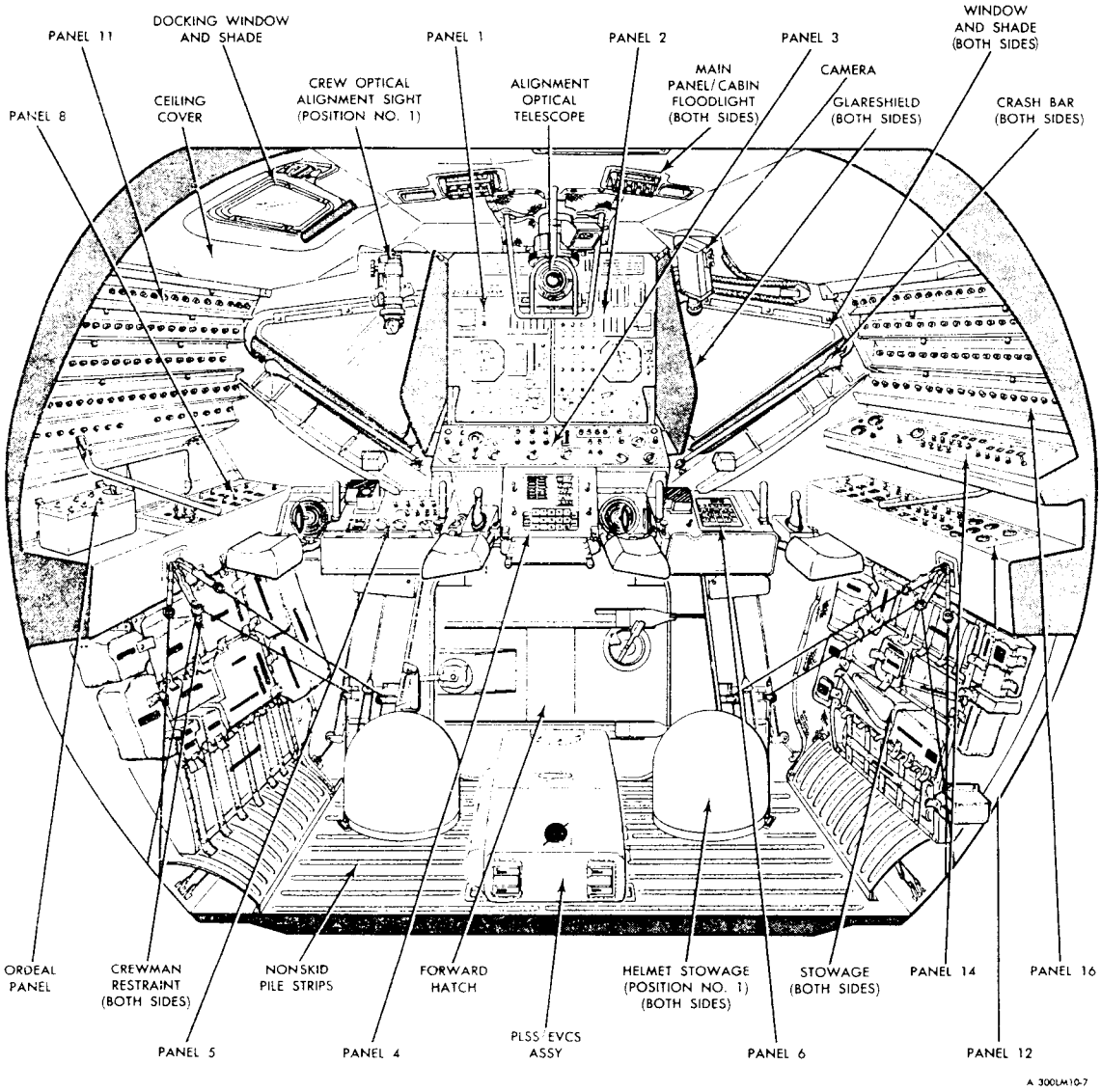

Figure 2.11-18. LM Cabin Interior, Forward View

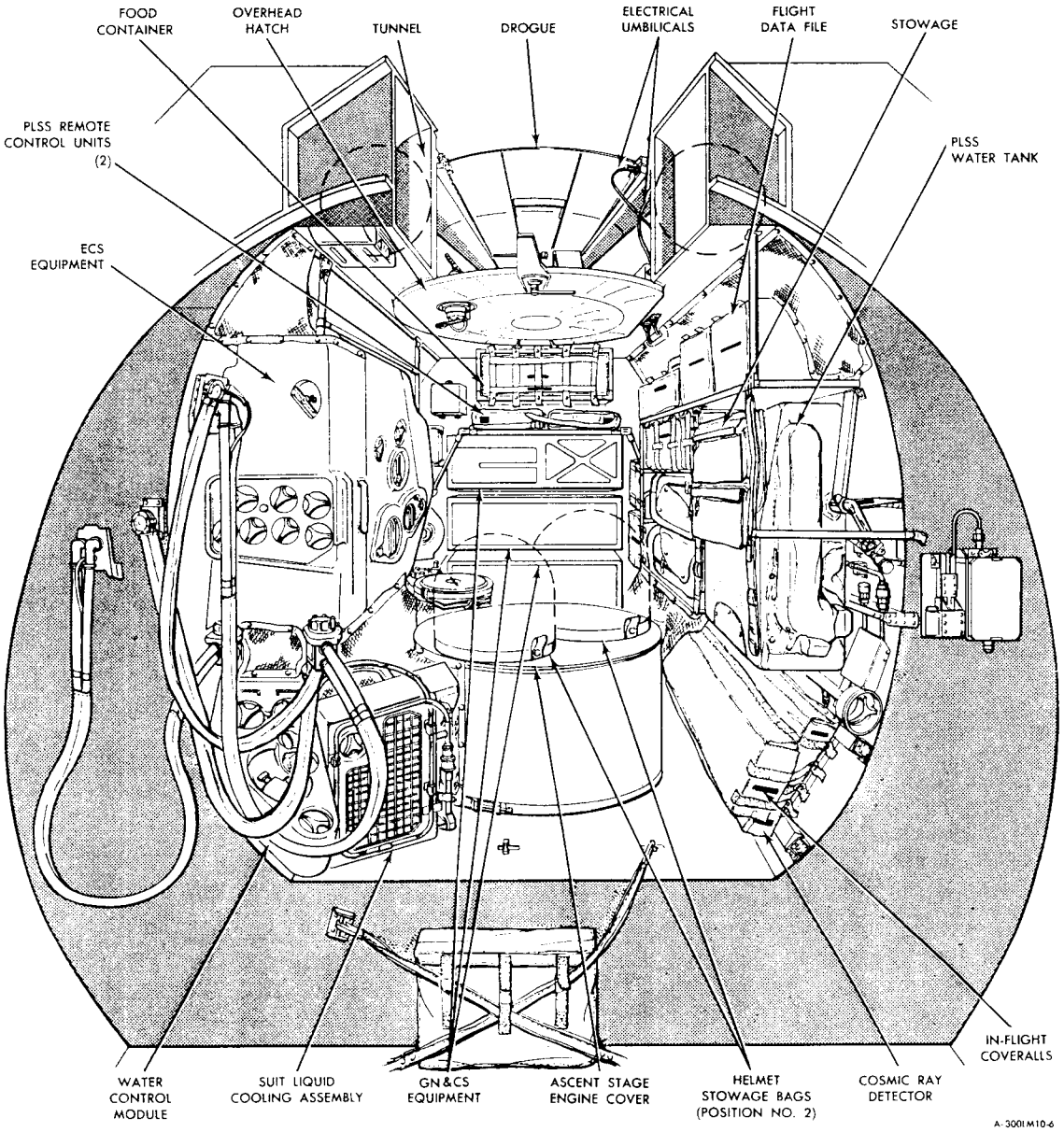

Figure 2.11-19. LM Cabin Interior, Aft View

2.11.10 APOLLO LUNAR SURFACE EXPERIMENT PACKAGE. (See figure 2.11-20.)

The Apollo lunar surface experiment package (ALSEP) is a self-contained package of scientific instruments and supporting subsystems capable of transmitting scientific data to earth for 1 year. These data will be used to derive information regarding the composition and structure of the lunar body, its magnetic field, atmosphere, and solar wind. Two containers are stowed in the descent stage. The containers are deployed by the extravehicular astronaut when the LM is on the lunar surface. (See figure 2.11-21.)

The laser ranging retroreflector (figure 2.11-22), is a passive experiment: a target for earth-based laser beams. It will reflect a beam back to earth to enable precise measurement of earth-moon distances, of fluctuations in the earth's rotation rate, and of gravity influence on the moon.

ALSEP power is supplied by a radioisotope thermoelectric generator (RTG). Electrical energy is developed through thermoelectric action. THE RTG provides a minimum of 16 volts at 56.2 watts to a power-conditioning unit. The radioisotope fuel capsule emits nuclear radiation and approximately 1,500 thermal watts continuously. The surface temperature of the fuel capsule is approximately 1,400° F. The capsule is stowed in a graphite cask, which is externally mounted on the descent stage. The capsule is removed from the cask on the lunar surface and installed in the RTG. (See figure 2.11-23.)

2.11.11 LM COMMUNICATION RELAY UNIT. (See figure 2.11-14.)

The LCRU, on pallet No. 1 in the MESA for LM 10 and subsequent, is a complete portable communication relay unit. It provides a direct communication link between the EVA's and MSFN. The unit can transmit with its own antenna or, when near the LM, using the LM S-band antenna.

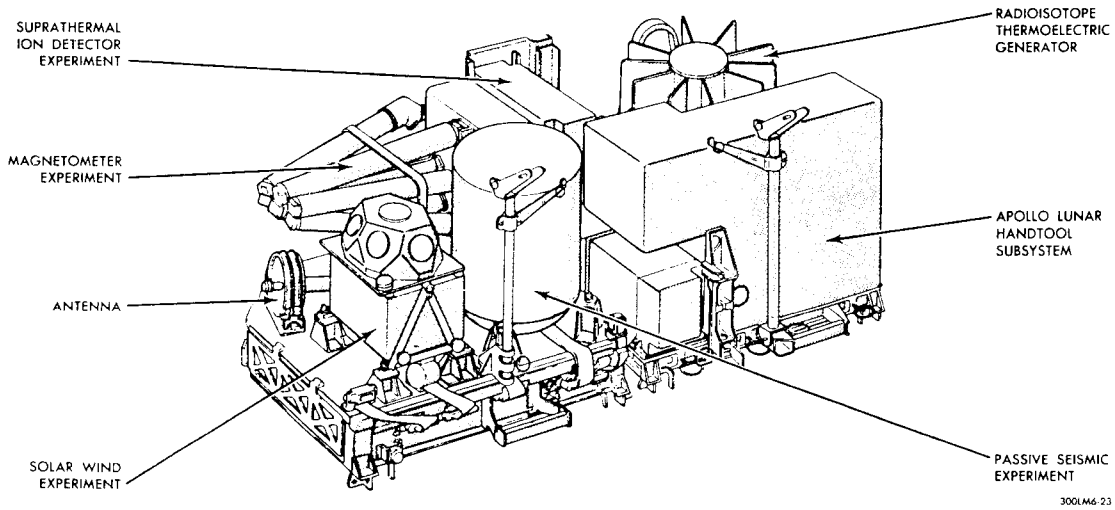

Figure 2.11-20. Apollo Lunar Surface Experiment Package

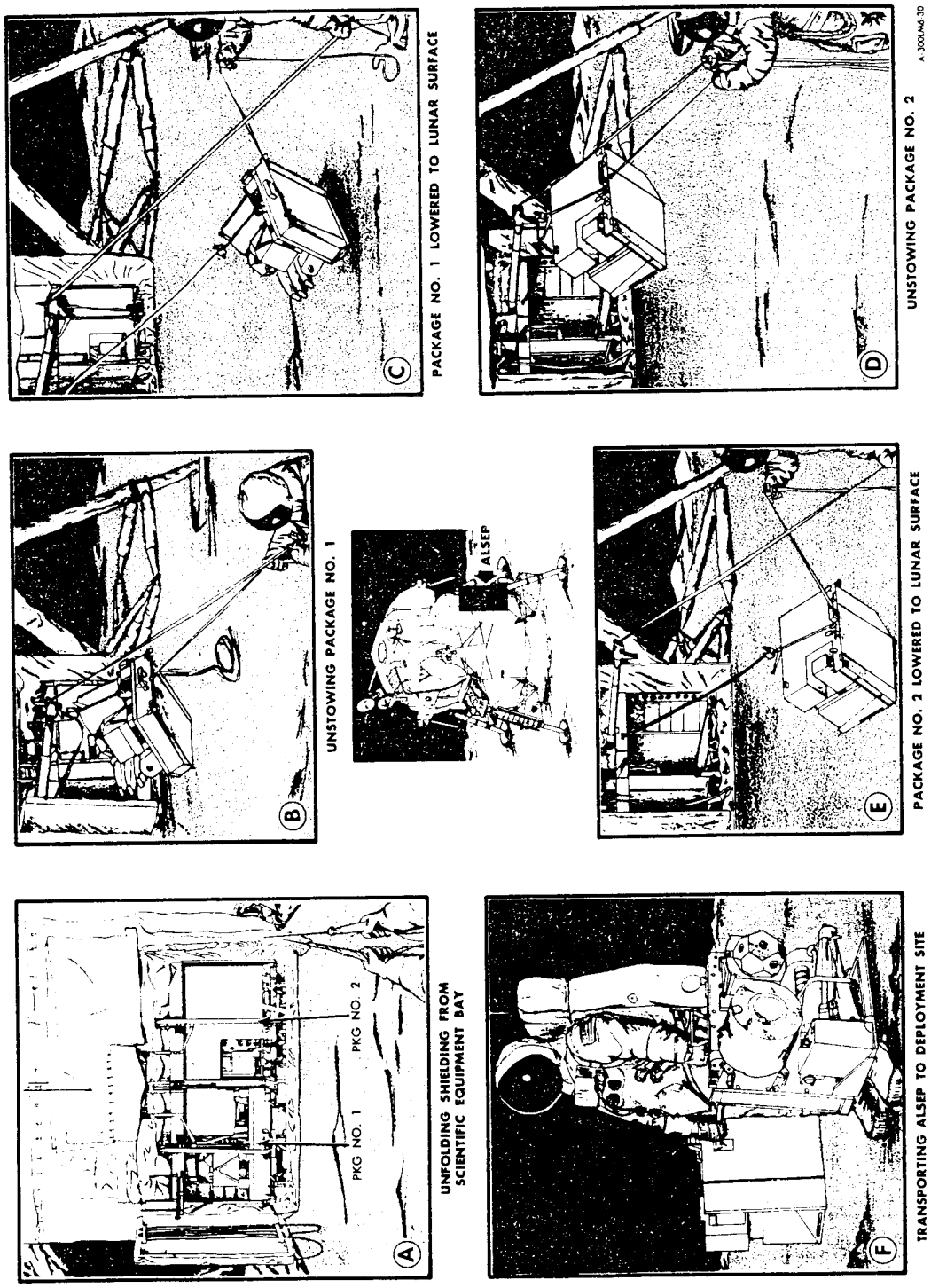

Figure 2.11-21. Offloading the ALSEP

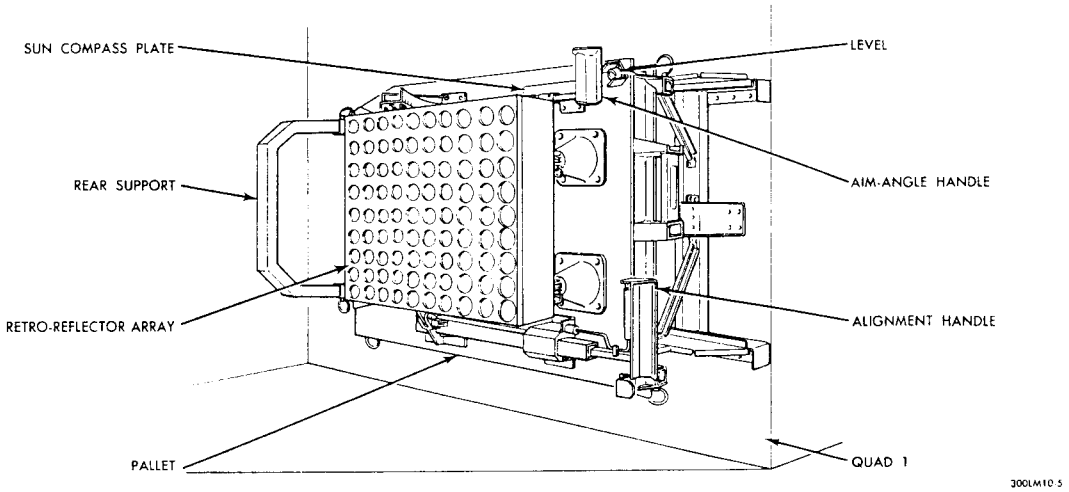

Figure 2.11-22. Laser Ranging Retroreflector

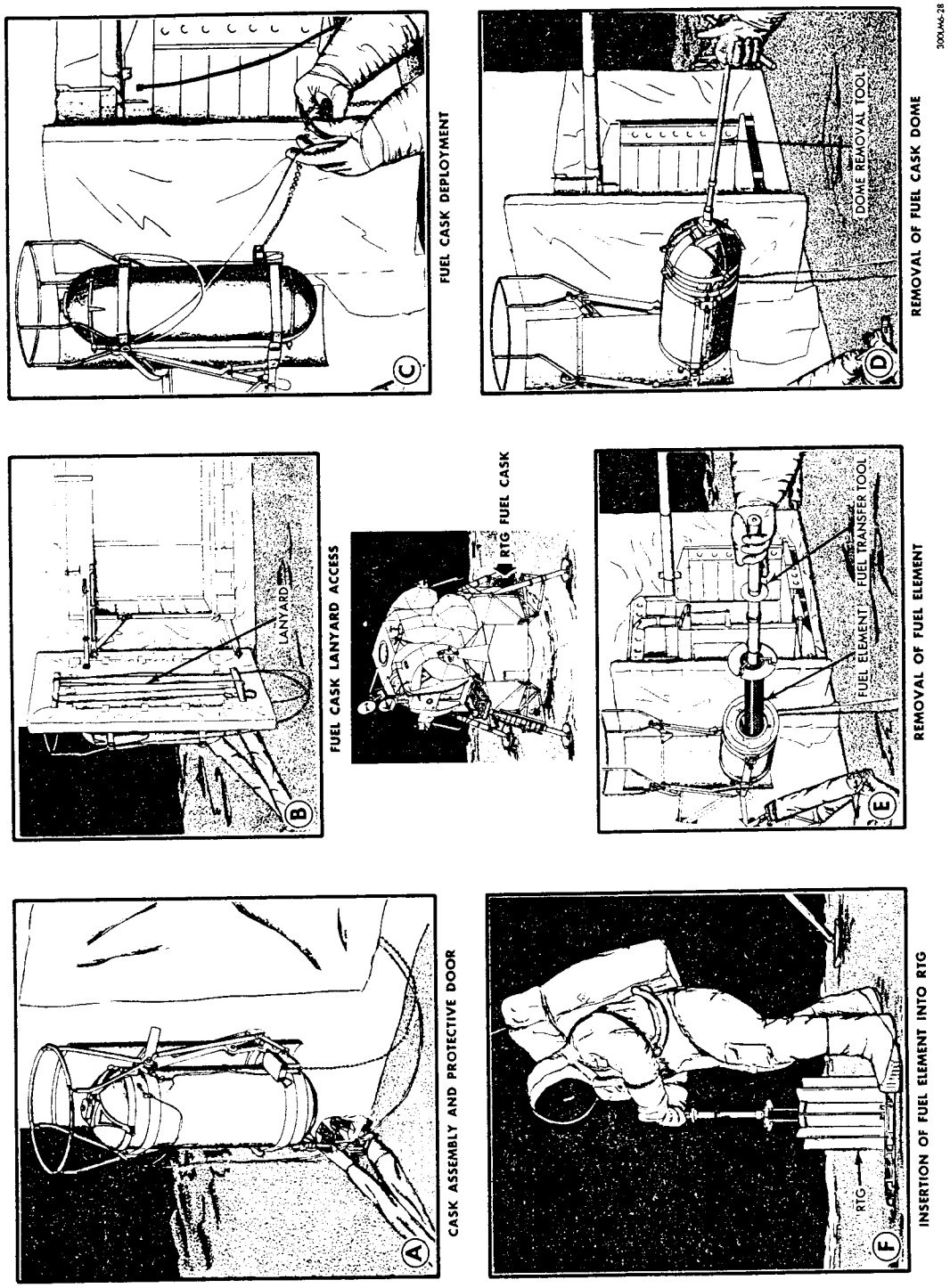

Figure 2.11-23. Fuel Capsule Transfer

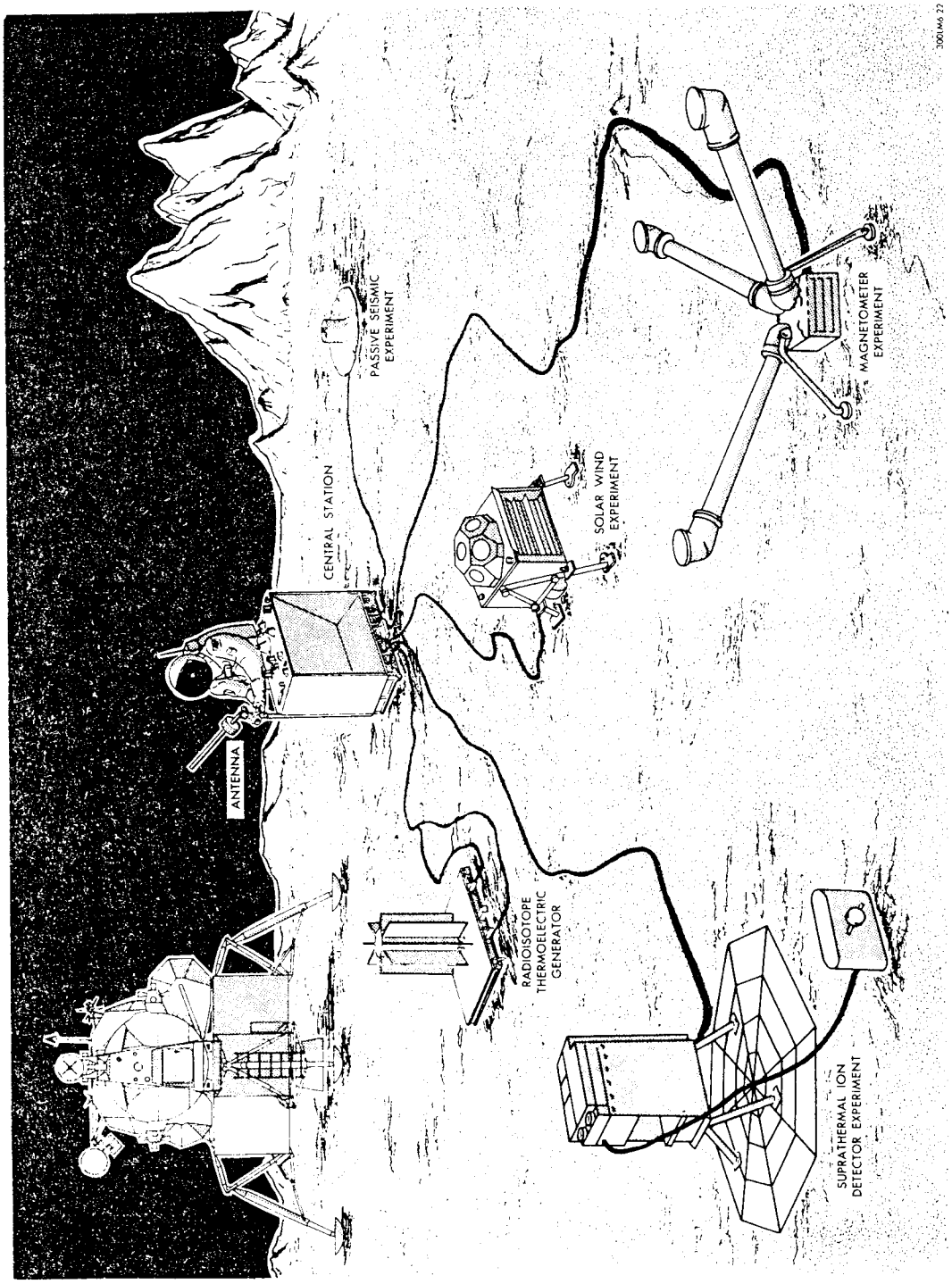

Figure 2.11-24. Apollo Lunar Surface Experiment Package Deployed (Typical)

SECTION 3

CONTROLS AND DISPLAYS

INTRODUCTION

This section contains detailed descriptions of the LM controls and displays. A cross-reference system, which permits quick and easy reference to any control or display, is provided in table 3-1. This table lists each item alphabetically, the item reference designation, the panel that contains the item, and the page number on which the item is to be found.

Figures 3-1 and 3-2, at the end of this section, show the controls and displays, panel areas, and panel numbers.

Column headings for the tabular presentation, and the description of the entries made under each, are as follows:

- Location/Ref Des. Notes the location, by panel number, of a particular control or display in the LM, and lists the reference designation.
- Name and Position. Gives the placarded nomenclature of the control or display and the control positions exactly as placarded on the panel. In the absence of placards, a functional name is assigned, and control positions are described.
- Function. Gives a brief description of the function of the control or display.
- Circuit Breaker. Gives the nomenclature and location of the circuit breaker(s) that controls the electrical power to the control or display.
- Power Source. Gives the rating and nomenclature of the immediate bus or source that supplies power to the control or display.
- Remarks. Contains additional data and explanatory remarks.

Table 3-1. Controls and Displays - Alphabetical Index

NAME AND REFERENCE DESIGNATION	PANEL NO.	PAGE NO.
#1 ASC O_2 valve control (7H21)	ECS	3-142
#2 ASC O_2 valve control (7H5)	ECS	3-142
+X TRANSL pushbutton (1S12)	5	3-81
-A-		
ABORT STAGE pushbutton (1S14)	1	3-29
ABORT pushbutton (1S13)	1	3-28
AC BUS A: AC BUS VOLT circuit breaker (4CB27)	11	3-98
AC BUS A: AOT LAMP circuit breaker (4CB212)	11	3-98
AC BUS A: BUS TIE INV 1 circuit breaker (4CB23)	11	3-98
AC BUS A: BUS TIE INV 2 circuit breaker (4CB24)	11	3-98
AC BUS A: CDR FDAI circuit breaker (4CB209)	11	3-99
AC BUS A: CDR WIND HTR circuit breaker (4CB144)	11	3-98
AC BUS A: DECA GMBL circuit breaker (4CB207)	11	3-98
AC BUS A: GASTA circuit breaker (4CB201)	11	3-99
AC BUS A: INTGL LTG circuit breaker (4CB211)	11	3-98
AC BUS A: RNDZ RDR circuit breaker (4CB206)	11	3-98
AC BUS A: RNG/RNG RT; ALT/ALT RT circuit breaker (4CB204)	11	3-99
AC BUS A: TAPE RCDR circuit breaker (4CB202)	11	3-98
AC BUS B: AGS circuit breaker (4CB203)	11	3-97
AC BUS B: AOT LAMP circuit breaker (4CB214)	11	3-97
AC BUS B: BUS TIE INV 1 circuit breaker (4CB185)	11	3-98
AC BUS B: BUS TIE INV 2 circuit breaker (4CB186)	11	3-97
AC BUS B: He/PQGS PROPUL DISP circuit breaker (4CB169)	11	3-97
AC BUS B: NUM LTG circuit breaker (4CB200)	11	3-97
AC BUS B: ORDEAL circuit breaker (4CB226)	11	3-97
AC BUS B: S-BD ANT circuit breaker (4CB34)	11	3-97
AC BUS B: SE FDAI circuit breaker (4CB210)	11	3-97
AC BUS B: SE WIND HTR circuit breaker (4CB152)	11	3-97
ACA/4 JET switches (CDR & LMP) (1S21) (1S23)	4	3-75
ACA PROP switch (1S25)	1	3-13
ACA PROP switch (1S26)	2	3-52
Address indicator (12M1)	6	3-87
AGS MODE CONTROL switch (11S25)	3	3-66
AGS STATUS switch (12S17)	6	3-87
AGS warning light (6DS8)	1	3-14
ALT light (3DS209)	12	3-77
ALT SET control (9R1)	ORDEAL	3-152
Altitude/range indicator (9M9)	1	3-21
AMPS indicator (4M3)	14	3-119
ANUN OVERRIDE switch (16S4)	5	3-83
ANUN/NUM control (16R2)	5	3-85
AOT indicator (3M7)	AOT	3-150
ASC He SEL switch (2S3)	8	3-91
ASC HI REG caution light (6DS21)	2	3-33
ASC H_2O valve (7H13)	ECS	3-144
ASC PRESS warning light (6DS2)	1	3-13
ASC QTY caution light (6DS22)	2	3-33
ASCENT He REG 1 switch (10S3)	1	3-26
ASCENT He REG 1 talkback (10FL1)	1	3-26
ASCENT He REG 2 switch (10S4)	1	3-26
ASCENT He REG 2 talkback (10FL2)	1	3-27
ATT/TRANSL switch (1S6)	1	3-25
ATTITUDE CONTROL: PITCH switch (11S3)	3	3-64
ATTITUDE CONTROL: ROLL switch (11S4)	3	3-64
ATTITUDE CONTROL: YAW switch (11S5)	3	3-64
Attitude control assembly (CDR) (1A1)	ACA	3-150
Attitude control assembly (LMP) (1A2)	ACA	3-150
ATTITUDE MON switch (CDR) (9S3)	1	3-20
ATTITUDE MON switch (LMP) (9S10)	2	3-56
AUDIO CONT switch (15AS5)	8	3-95

Table 3-1. Controls and Displays - Alphabetical Index (cont)

NAME AND REFERENCE DESIGNATION	PANEL NO.	PAGE NO.
AUDIO CONT switch (15BS5)	12	3-110
Azimuth control (3H2)	AOT	3-149
-B-		
BAL CPL switch (1S9)	1	3-25
BAT FAULT component caution light (4DS1)	14	3-49
BAT 5 BACK UP CDR FEED switch (4S12)	14	3-127
BAT 5 BACK UP CDR FEED talkback (4FL7)	14	3-127
BAT 5 NORMAL LMP FEED switch (4S10)	14	3-126
BAT 5 NORMAL LMP FEED talkback (4FL5)	14	3-127
BAT 6 BACK UP LMP FEED switch (4S13)	14	3-128
BAT 6 BACK UP LMP FEED talkback (4FL8)	14	3-129
BAT 6 NORMAL CDR FEED switch (4S11)	14	3-128
BAT 6 NORMAL CDR FEED talkback (4FL6)	14	3-128
BATTERY caution light (6DS27)	2	3-34
-C-		
C/W PWR caution light (6DS34)	2	3-35
CABIN GAS RETURN valve (7H17)	ECS	3-145
CABIN PRESS indicator (7M2A)	2	3-53
Cabin relief and dump valve (7H11) (7H20)	ECS	3-147
CABIN REPRESS valve (7H3)	ECS	3-141
CABIN TEMP indicator (7M3A)	2	3-53
CABIN warning light (6DS16)	1	3-15
CAMR: SEQ circuit breaker (4CB33)	16	3-139
CDR BAT 3 switch (4S3)	14	3-123
CDR BAT 3 talkback (4FL3)	14	3-124
CDR BAT 3 talkback (4FL3)	14	3-124
CDR BAT 4 HI-V switch (4S4)	14	3-124
CDR BAT 4 LO-V switch (4S8)	14	3-125
CDR BAT 4 talkback (4FL4)	14	3-125
CDR UTILITY LIGHT switch (16S19)	UTIL	3-153
CES AC warning light (4DS6)	1	3-13
CES DC warning light (6DS7)	1	3-13
CLR pushbutton (CDR) (3S5)	4	3-78
CLR pushbutton (LMP) (12S13)	6	3-88
CO_2 CANISTER SEL valve (7H19)	ECS	3-145
CO_2 component caution light (7DS6)	2	3-58
COAS switch (16S14)	8	3-96
COMM: CDR AUDIO circuit breaker (4CB86)	11	3-106
COMM: DISP circuit breaker (4CB153)	16	3-135
COMM: PMP circuit breaker (4CB102)	16	3-136
COMM: PRIM S-BD PWR AMPL circuit breaker (4CB30)	16	3-136
COMM: PRIM S-BD XMTR/RCVR circuit breaker (4CB111)	16	3-136
COMM: S-BD ANT circuit breaker (4CB10)	16	3-136
COMM: SE AUDIO circuit breaker (4CB85)	16	3-136
COMM: SEC S-BD PWR AMPL circuit breaker (4CB136)	11	3-105
COMM: SEC S-BD XMTR/RCVR circuit breaker (4CB137)	11	3-105
COMM: TV circuit breaker (4CB104)	16	3-137
COMM: UPDATA LINK circuit breaker (4CB228)	11	3-105
COMM: UPLINK SQUELCH switch (13S17)	14	3-129
COMM: VHF A RCVR circuit breaker (4CB87)	11	3-106
COMM: VHF A XMTR circuit breaker (4CB115)	16	3-136
COMM: VHF B RCVR circuit breaker (4CB114)	16	3-136
COMM: VHF B XMTR circuit breaker (4CB162)	11	3-105
COMPTR ACTY condition indicator (3DS15)	4	3-78

Table 3-1. Controls and Displays - Alphabetical Index (cont)

NAME AND REFERENCE DESIGNATION	PANEL NO.	PAGE NO.
CRSFD switch (8S20)	2	3-50
CRSFD talkback (8FL17)	2	3-50
-D-		
Data display registers (CDR) (3M4) (3M5) (3M6)	4	3-78
Data indicator (LMP) (12M2)	6	3-87
DC FEEDER FAULT component caution light (4DS2)	14	3-119
DC BUS warning light (6DS14)	1	3-15
DEAD BAND switch (11S2)	3	3-63
DES BATS switch (4S9)	14	3-125
DES BATS talkback (4FL9)	14	3-126
DES ENG CMD OVRD switch (1S19)	3	3-59
DES H_2O valve (7H26)	ECS	3-144
DES O_2 valve (7H15)	ECS	3-142
DES PROPULSION FUEL VENT switch (10S9)	8	3-89
DES PROPULSION FUEL VENT talkback (10FL5)	8	3-89
DES PROPULSION OXID VENT switch (10S10)	8	3-89
DES PROPULSION OXID VENT talkback (10FL6)	8	3-90
DES PRPLNT ISOL VLV switch (2S9)	8	3-90
DES QTY warning light (6DS4)	1	3-13
DES RATE switch (1S5)	5	3-81
DES REG warning light (6DS3)	1	3-13
DES VENT switch (2S6)	8	3-90
DESCENT He REG 1 switch (10S5)	1	3-27
DESCENT He REG 1 talkback (10FL3)	1	3-27
DESCENT He REG 2 switch (10S7)	1	3-28
DESCENT He REG 2 talkback (10FL4)	1	3-28
-E-		
EARTH-LUNAR switch (9S25)	ORDEAL	3-152
ECS caution light (6DS36)	2	3-36
ECS: CABIN FAN circuit breaker (4CB107)	11	3-105
ECS: CABIN FAN CONT circuit breaker (4CB109)	16	3-137
ECS: CABIN REPRESS circuit breaker (4CB113)	16	3-137
ECS: CO_2 SENSOR circuit breaker (4CB84)	16	3-138
ECS: DISP circuit breaker (4CB140)	16	3-137
ECS: DIVERT VLV circuit breaker (4CB112)	16	3-138
ECS: GLYCOL PUMP 1 circuit breaker (4CB117)	11	3-105
ECS: GLYCOL PUMP 2 circuit breaker (4CB141)	11	3-105
ECS: GLYCOL PUMP AUTO TRNFR circuit breaker (4CB217)	11	3-105
ECS: GLYCOL PUMP SEC circuit breaker (4CB96)	16	3-137
ECS: LCG PUMP (4CB108)	16	3-137
ECS: SUIT FAN ΔP circuit breaker (4CB120)	16	3-137
ECS: SUIT FAN 1 circuit breaker (4CB138)	11	3-104
ECS: SUIT FAN 2 circuit breaker (4CB119)	16	3-137
ECS: SUIT FLOW CONT circuit breaker (4CB234)	16	3-135
ED RELAYS caution light (6DS31)	2	3-35
ED: LDG GEAR FLAG circuit breaker (4CB149)	11	3-103
ED: LOGIC PWR A circuit breaker (4CB76)	11	3-104
ED: LOGIC PWR B circuit breaker (4CB75)	16	3-133
ED VOLTS switch (4S17)	14	3-119
ENG ARM switch (1S1)	1	3-25
ENG GMBL caution light (6DS23)	2	3-33
ENG GMBL switch (1S8)	3	3-59
Engine START pushbutton (1S2)	5	3-81
Engine stop pushbutton (CDR) (1S3)	5	3-81
Engine stop switch (LMP) (1S4)	6	3-87
ENTR pushbutton (DEDA) (12S14)	6	3-88
ENTR pushbutton (DSKY) (3S8)	4	3-79
EPS: ASC ECA circuit breaker (4CB15)	11	3-108
EPS: ASC ECA circuit breaker (4CB14)	16	3-139

Table 3-1. Controls and Displays - Alphabetical Index (cont)

NAME AND REFERENCE DESIGNATION	PANEL NO.	PAGE NO.
-E-		
EPS: ASC ECA CONT circuit breaker (4CB6)	11	3-108
EPS: ASC ECA CONT circuit breaker (4CB7)	16	3-139
EPS: BAT FEED TIE (2) circuit breakers (4CB18) (4CB26)	11	3-107
EPS: BAT FEED TIE (2) circuit breakers (4CB17) (4CB25)	16	3-140
EPS: -CROSS TIE - BAL LOADS circuit breaker (4CB184)	11	3-107
EPS: -CROSS TIE - BAL LOADS circuit breaker (4CB183)	16	3-140
EPS: -CROSS TIE - BUS circuit breaker (4CB20)	11	3-107
EPS: -CROSS TIE - BUS circuit breaker (4CB19)	16	3-140
EPS: DC BUS VOLT circuit breaker (4CB22)	11	3-108
EPS: DC BUS VOLT circuit breaker (4CB21)	16	3-139
EPS: DES ECA circuit breaker (4CB10)	11	3-108
EPS: DES ECA circuit breaker (4CB11)	16	3-139
EPS: DES ECA CONT circuit breaker (4CB8)	11	3-107
EPS: DES ECA CONT circuit breaker (4CB9)	16	3-140
EPS: DISP circuit breaker (4CB16)	16	3-139
EPS: INV 1 circuit breaker (4CB12)	11	3-108
EPS: INV 2 circuit breaker (4CB13)	16	3-139
EPS: XLUNAR BUS TIE circuit breaker (4CB4)	11	3-107
EPS: XLUNAR BUS TIE circuit breaker (4CB5)	16	3-140
EVENT TIMER indicator (9M11)	1	3-16
EVENT TIMER RESET/CONT switch (9S11)	3	3-69
EVENT TIMER SLEW CONT MIN switch (9S13)	3	3-69
EVENT TIMER SLEW CONT SEC switch (9S14)	3	3-70
EVENT TIMER TIMER CONT switch (9S12)	3	3-69
EXTERIOR LTG switch (16S17)	3	3-72
Eyepiece adjust lever (3H3)	AOT	3-149
-F-		
FDAI 1 switch (9S23)	ORDEAL	3-151
FDAI 2 switch (9S24)	ORDEAL	3-152
Flight director attitude indicator (FDAI) (9M1)	1	3-20
Flight director attitude indicator (FDAI) (9M6)	2	3-55
FLIGHT DISPLAYS: CDR FDAI circuit breaker (4CB97)	11	3-101
FLIGHT DISPLAYS: COAS circuit breaker (4CB188)	11	3-101
FLIGHT DISPLAYS: GASTA circuit breaker (4CB88)	11	3-101
FLIGHT DISPLAYS: MISSION TIMER circuit breaker (4CB159)	11	3-100
FLIGHT DISPLAYS: ORDEAL circuit breaker (4CB227)	11	3-101
FLIGHT DISPLAYS: RNG/RNG RT; ALT/ALT RT circuit breaker (4CB123)	11	3-100
FLIGHT DISPLAYS: THRUST circuit breaker (4CB168)	11	3-100
FLIGHT DISPLAYS: CDR X-PNTR circuit breaker (4CB133)	11	3-100
FLOOD OVHD/FWD control (16R4)	3	3-71
FLOOD OVHD/FWD control (16R1)	5	3-84
FLOOD OVHD/FWD switch (16S6)	3	3-71
FLT DISP: EVENT TIMER/SE FDAI circuit breaker (4CB126)	16	3-131
FLT DISP: SE X-PNTR circuit breaker (4CB134)	16	3-131
FUEL QUANTITY indicator (10M5B)	1	3-18
FUNCTION PCM switch (13S4)	12	3-113
FUNCTIONS RANGE switch (13S1)	12	3-114
FUNCTIONS VOICE switch (13S6)	12	3-113
-G-		
GIMBAL LOCK condition indicator (3DS9)	4	3-76
GLYCOL caution light (6DS38)	2	3-36
GLYCOL indicator panel failure indicator (16DS95)	2	3-54
GLYCOL component caution light (7DS3)	2	3-57
GLYCOL PRESS indicator (7M5A)	2	3-54
GLYCOL selector switch (7S3)	2	3-57

Table 3-1. Controls and Displays - Alphabetical Index (cont)

NAME AND REFERENCE DESIGNATION	PANEL NO.	PAGE NO.
-G-		
GLYCOL TEMP indicator (7M5B)	2	3-53
GUID CONT switch (9S6)	1	3-21
GYRO TEST POS RT switch (11S1)	3	3-63
GYRO TEST ROLL switch (11S7)	3	3-63
-H-		
H_2O QUANTITY indicator (7M48)	2	3-54
H_2O SEP component caution light (7DS7)	2	3-58
He PRESS ASCENT switch (2S4)	8	3-92
He PRESS DES START switch (2S1)	8	3-92
He PRESS RCS switch (2S2)	8	3-91
HEATER caution light (6DS33)	2	3-35
HEATERS RCS SYS A/B-1: QUAD 1 circuit breaker (4CB218)	11	3-104
HEATERS RCS SYS A/B-1: QUAD 2 circuit breaker (4CB219)	11	3-104
HEATERS RCS SYS A/B-1: QUAD 3 circuit breaker (4CB220)	11	3-104
HEATERS RCS SYS A/B-1: QUAD 4 circuit breaker (4CB221)	11	3-104
HEATERS: AOT circuit breaker (4CB213)	11	3-102
HEATERS: DISP circuit breaker (4CB68)	16	3-138
HEATERS: DOCK WINDOW circuit breaker (4CB129)	11	3-102
HEATERS: LDG RDR circuit breaker (4CB157)	11	3-102
HEATERS: MESA circuit breaker (4CB242)	16	3-138
HEATERS: RNDZ OPR circuit breaker (4CB155)	11	3-101
HEATERS: RNDZ RDR STBY circuit breaker (4CB156)	11	3-101
HEATERS: S-BD ANT circuit breaker (4CB31)	16	3-139
HEATERS: RCS SYS A/B-2: QUAD 1 circuit breaker (4CB222)	16	3-138
HEATERS: RCS SYS A/B-2: QUAD 2 circuit breaker (4CB223)	16	3-138
HEATERS: RCS SYS A/B-2: QUAD 3 circuit breaker (4CB224)	16	3-138
HEATERS: RCS SYS A/B-2: QUAD 4 circuit breaker (4CB225)	16	3-138
HEATERS: URINE LINE circuit breaker (4CB241)	11	3-101
HELIUM indicator (10M1)	1	3-18
HELIUM MON selector switch (10S6)	1	3-30
Hi PLSS O_2 fill valve (7H29)	ECS	3-148
HOLD pushbutton (12S16)	6	3-88
HTR CONT MESA switch (16S22)	8	3-89
HTR CONT URINE LINE switch (16S21)	8	3-89
-I-		
ICS T/R switch (CDR) (15AS3)	8	3-94
ICS T/R switch (LMP) (15BS3)	12	3-109
ICS VOLUME thumbwheel (CDR) (15AR7)	8	3-94
ICS VOLUME thumbwheel (LMP) (15BR7)	12	3-109
IMU CAGE switch (3S1)	3	3-68
INST: CWEA circuit breaker (4CB99)	16	3-135
INST: PCM/TE circuit breaker (4CB125)	16	3-135
INST: SIG CONDR 1 circuit breaker (4CB131)	11	3-102
INST: SIG CONDR 2 circuit breaker (4CB1)	16	3-135
INST: SIG SENSOR circuit breaker (4CB132)	16	3-135
INTEGRAL control (16R3)	5	3-85
INTEGRAL OVERRIDE switch (16S3)	5	3-84
INVERTER caution light (6DS26)	2	3-33
INVERTER switch (4S14)	14	3-120
ISS warning light (6DS10)	1	3-14
-K-		
KEY REL condition indicator (3DS7)	4	3-76
KEY REL pushbutton (3S7)	4	3-79
Keyboard pushbutton (DEDA) (12S1 thru 12S12)	6	3-88
Keyboard pushbuttons (DSKY) (3S10 thru 3S21)	4	3-79

Table 3-1. Controls and Displays - Alphabetical Index (cont)

NAME AND REFERENCE DESIGNATION	PANEL NO.	PAGE NO.
-L-		
LAMP/TONE TEST selector switch (16S10)	3	3-71
LDG ANT switch (17S5)	3	3-59
LDG GEAR DEPLOY switch (2S10)	8	3-91
LDG GEAR DEPLOY talkback (2FL1)	8	3-91
LGC warning light (6DS9)	1	3-14
LIGHTING switch (9S26)	ORDEAL	3-152
LIQUID GARMENT COOLING valve	ECS	3-148
LMP BAT 1 HI-V switch (4S1)	14	3-121
LMP BAT 1 LO-V switch (4S5)	14	3-121
LMP BAT 1 talkback (4FL1)	14	3-122
LMP BAT 2 switch (4S2)	14	3-122
LMP BAT 2 talkback (4FL2)	14	3-123
LMP UTILITY LIGHTS switch (16S20)	UTIL	3-153
LTG: ANUN/DOCK/COMPNT circuit breaker (4CB146)	11	3-104
LTG: ANUN/DOCK/COMPNT circuit breaker (4CB148)	16	3-133
LTG: FLOOD circuit breaker (4CB128)	16	3-133
LTG: MASTER ALARM circuit breaker (4CB147)	16	3-133
LTG: TRACK circuit breaker (4CB160)	16	3-133
LTG: UTIL circuit breaker (4CB236)	11	3-104
LUNAR BAT CDR switch (4S7)	14	3-125
LUNAR BAT LMP switch (4S6)	14	3-126
LUNAR BAT talkback (4FL10)	14	3-126
LUNAR CONTACT light (CDR) (1DS1)	1	3-16
LUNAR CONTACT light (LMP) (1DS2)	3	3-72
-M-		
MARK X pushbutton (3S23)	AOT	3-149
MARK Y pushbutton (3S25)	AOT	3-149
MAN THROT switch (1S10)	1	3-24
MASTER ALARM pushbutton/light (CDR) (6S2)	1	3-19
MASTER ALARM pushbutton/light (LMP) (6S3)	2	3-53
MASTER ARM switch (2S7)	8	3-90
MASTER VOL thumbwheel (CDR) (15AR15)	8	3-96
MASTER VOL thumbwheel (LMP) (15BR15)	12	2-112
MISSION TIMER indicator (9M12)	1	3-16
MISSION TIMER: SLEW CONT HOURS switch (9S22)	5	3-82
MISSION TIMER: SLEW CONT MIN switch (9S21)	5	3-82
MISSION TIMER: SLEW CONT SEC switch (9S20)	5	3-83
MISSION TIMER: TIMER CONT switch (9S19)	5	3-81
MODE SEL switch (9S9)	1	3-22
MODE switch (9S27)	ORDEAL	3-153
MODE switch (15AS6)	8	3-94
MODE switch (15BS6)	12	3-110
MODULATE switch (13S5)	12	3-112
-N-		
NO ATT condition indicator (3DS5)	4	3-76
NO TRACK light (17DS1)	3	3-60
NOUN display indicator (3M3)	4	3-78
NOUN pushbutton (3S4)	4	3-78
NUM OVERRIDE switch (16S5)	5	3-83
-O-		
O_2 QTY caution light (6DS37)	2	3-36
O_2 QUANTITY indicator (7M4A)	2	3-52
O_2/H_2 QTY MON selector switch (7S2)	2	3-58
OPR ERR condition indicator (DSKY) (3DS14)	4	3-77
OPR ERR condition indicator (DEDA) (12DS1)	6	3-87
OXIDIZER QUANTITY indicator (10M5A)	1	3-18

Table 3-1. Controls and Displays - Alphabetical Index (cont)

NAME AND REFERENCE DESIGNATION	PANEL NO.	PAGE NO.
-P-		
PART PRESS CO_2 indicator (7M1)	2	3-53
PGNS MODE CONTROL switch (11S24)	3	3-65
PGNS: IMU OPR circuit breaker (4CB124)	11	3-107
PGNS: IMU STBY circuit breaker (4CB161)	11	3-106
PGNS: LDG RDR circuit breaker (4CB105)	11	3-106
PGNS: LGC/DSKY circuit breaker (4CB122)	11	3-106
PGNS: RNDZ RDR RDR circuit breaker (4CB29)	11	3-106
PGNS: SIG STR DISP circuit breaker (4CB154)	11	3-106
PITCH control (14B2)	12	3-117
PITCH indicator (14M3)	12	3-117
PLSS FILL valve (7H4)	ECS	3-141
POWER/TEMP MON selector switch (4S15)	14	3-119
PRE AMPS caution light (6DS30)	2	3-34
PRESS indicator (10M3)	1	3-19
PRESS indicator power failure indicator (16DS90)	1	3-19
PRESS indicator (System A) (8M1A)	2	3-37
PRESS indicator (System B) (8M1B)	2	3-37
PRESS indicator power failure indicator (16DS96)	2	3-37
PRESS indicator power failure indicator (16DS93)	2	3-53
PRESS REG A valve (7H1)	ECS	3-142
PRESS REG B valve (7H2)	ECS	3-142
PRI EVAP FLOW #1 valve (7H25)	ECS	3-148
PRI EVAP FLOW #2 valve (7H16)	ECS	3-143
PRIMARY CO_2 CANISTER	ECS	3-146
PRO pushbutton (3S6)	4	3-78
PROG condition indicator (3DS10)	4	3-76
PROG display indicator (3M1)	4	3-77
PROPUL: ACS He REG circuit breaker (4CB53)	16	3-133
PROPUL: DES He REG/VENT circuit breaker (4CB74)	11	3-101
PROPUL: PQGS circuit breaker (4CB32)	16	3-133
PROPUL: DISP/ENG OVRD LOGIC circuit breaker (4CB103)	16	3-132
PRPLNT QTY MON switch (10S8)	1	3-29
PRPLNT TEMP/PRESS MON switch (10S1)	1	3-30
PWR AMPL switch (13S2)	12	3-112
-Q-		
QUANTITY indicator (8M4)	2	3-37
QUANTITY indicator power failure indicator (16DS98)	2	3-37
QUANTITY indicator power failure indicator (16DS94)	2	3-54
-R-		
RADAR TEST switch (17S6)	3	3-60
RATE/ERR MON switch (CDR) (9S2)	1	3-19
RATE/ERR MON switch (LMP) (9S7)	2	3-56
RATE SCALE switch (9S29)	1	3-23
RCS A REG warning light (6DS12)	1	3-15
RCS B REG warning light (6DS13)	1	3-15
RCS caution light (6DS32)	2	3-35
RCS QUAD 1 heater switch (11S4)	3	3-70
RCS QUAD 2 heater switch (11S5)	3	3-70
RCS QUAD 3 heater switch (11S6)	3	3-70
RCS QUAD 4 heater switch (11S7)	3	3-70
RCS SYS A: ASC FEED 1 circuit breaker (4CB51)	11	3-100
RCS SYS A: ASC FEED 2 circuit breaker (4CB231)	11	3-100
RCS SYS A: ISOL VLV circuit breaker (4CB67)	11	3-100
RCS SYS A: MAIN SOV circuit breaker (4CB72)	11	3-99
RCS SYS A: QUAD 1 TCA circuit breaker (4CB63)	11	3-99
RCS SYS A: QUAD 2 TCS circuit breaker (4CB62)	11	3-99
RCS SYS A: QUAD 3 TCA circuit breaker (4CB61)	11	3-99
RCS SYS A: QUAD 4 TCA circuit breaker (4CB60)	11	3-99

Table 3-1. Controls and Displays - Alphabetical Index (cont)

NAME AND REFERENCE DESIGNATION	PANEL NO.	PAGE NO.
-R-		
RCS SYS B: ASC FEED 1 circuit breaker (4CB52)	16	3-131
RCS SYS B: ASC FEED 2 circuit breaker (4CB232)	16	3-131
RCS SYS B: CRSFD circuit breaker (4CB54)	16	3-132
RCS SYS B: ISOL VLV circuit breaker (4CB49)	16	3-131
RCS SYS B: MAIN SOV circuit breaker (4CB73)	16	3-132
RCS SYS B: PQGS/DISP circuit breaker (4CB121)	16	3-132
RCS SYS B: QUAD 1 TCA circuit breaker (4CB45)	16	3-131
RCS SYS B: QUAD 2 TCA circuit breaker (4CB44)	16	3-132
RCS SYS B: QUAD 3 TCA circuit breaker (4CB43)	16	3-132
RCS SYS B: QUAD 4 TCA circuit breaker (4CB42)	16	3-132
RCS SYS B: TEMP/PRESS DISP-FLAGS circuit breaker (4CB50)	16	3-132
RCS TCA warning light (6DS11)	1	3-14
READOUT pushbutton (12S15)	6	3-88
RECORDER switch (13S11)	12	3-116
RECORDER TAPE talkback (13FL1)	12	3-116
REJECT pushbutton (3S24)	AOT	3-149
RELAY ON switch (CDR) (15AS4)	8	3-94
RELAY ON switch (LMP) (15BS4)	12	3-110
RENDEZVOUS RADAR mode selector switch (17S3)	3	3-62
RESTART condition indicator (3DS11)	4	3-76
Reticle control (3H1)	AOT	3-149
Reticle illumination control	AOT	3-149
RNDZ RDR caution light (6DS28)	2	3-34
RNG/ALT MON switch (9S4)	1	3-22
RR GYRO SEL switch (17S9)		3-153
RSET pushbutton (3S9)	4	3-79
-S-		
S-BAND selector switch (14S5)	12	3-118
S-BAND T/R switch (CDR) (15AS1)	8	3-93
S-BAND T/R switch (LMP) (15BS1)	12	3-109
S-band VOLUME thumbwheel (CDR) (15AR14)	8	3-93
S-band VOLUME thumbwheel (LMP) (15BR14)	12	3-109
S-BAND XMTR/RCVR switch (13S8)	12	3-112
S-BD RCVR caution light (6DS40)	2	3-37
SEC EVAP FLOW valve (7H18)	ECS	3-143
SECONDARY CO_2 CANISTER	ECS	3-146
SHFT/TRUN ✱ switch (9S8)	1	3-23
SIDE PANELS switch (CDR) (16S1)	5	3-84
SIDE PANELS switch (LMP) (16S9)	3	3-71
SIGNAL STRENGTH indicator (14M1)	12	3-117
SIGNAL STRENGTH indicator (17M1)	3	3-60
SLEW RATE switch (17S2)	3	3-61
SLEW switch (17S1)	3	3-62
SLEW switch (9S28)	ORDEAL	3-153
SQUELCH VHF A thumbwheel (13R10)	12	3-114
SQUELCH VHF B thumbwheel (13R15)	12	3-115
STAB/CONT: ABORT STAGE circuit breaker (4CB3)	11	3-102
STAB/CONT: ABORT STAGE circuit breaker (4CB2)	16	3-134
STAB/CONT: AEA circuit breaker (4CB28)	11	3-102
STAB/CONT: AEA circuit breaker (4CB28)	16	3-134
STAB/CONT: AELD circuit breaker (4CB40)	11	3-102
STAB/CONT: AELD circuit breaker (4CB41)	16	3-134

Table 3-1. Controls and Displays - Alphabetical Index (cont)

NAME AND REFERENCE DESIGNATION	PANEL NO.	PAGE NO.
-S-		
STAB/CONT: ASA circuit breaker (4CB79)	16	3-134
STAB/CONT: ATCA (AGS) circuit breaker (4CB230)	16	3-134
STAB/CONT: ATCA (PGNS) circuit breaker (4CB81)	11	3-102
STAB/CONT: ATCA circuit breaker (4CB82)	16	3-134
STAB/CONT: TCA DIR CONT circuit breaker (4CB59)	11	3-103
STAB/CONT: DECA PWR circuit breaker (4CB69)	11	3-103
STAB/CONT: DES ENG OVRD circuit breaker (4CB233)	16	3-134
STAB/CONT: ENG ARM circuit breaker (4CB37)	16	3-134
STAB/CONT: ENG CONT circuit breaker (4CB80)	11	3-103
STAB/CONT: ENG START OVRD circuit breaker (4CB106)	11	3-103
STAGE switch (2S5)	8	3-92
STAGE RELAY switch (2S8)	8	3-93
STAGE SEQ RELAYS SYS A component caution light (2DS1)	8	3-92
STAGE SEQ RELAYS SYS B component caution light (2DS2)	8	3-93
STBY condition indicator (3DS6)	4	3-76
SUIT CIRCUIT RELIEF valve (7H9)	ECS	3-146
SUIT FAN component caution light (7DS1)	2	3-57
SUIT FAN selector switch (7S1)	2	3-57
SUIT GAS DIVERTER valve (7H8)	ECS	3-141
SUIT ISOL valves (7H6) (7H7)	ECS	3-143
SUIT PRESS indicator (7M2B)	2	3-53
SUIT TEMP indicator (7M3B)	2	3-53
SUIT TEMP valve (7H22)	ECS	3-143
SUIT/FAN warning light (6DS17)	1	3-15
SYSTEM A ASC FEED 1 switch (8S8)	2	3-38
SYSTEM A ASC FEED 2 switch (8S22)	2	3-39
SYSTEM A ASC FUEL talkback (8FL6)	2	3-38
SYSTEM A ASC OXID talkback (8FL18)	2	3-39
SYSTEM A LGC THRUSTER PAIR CMDS QUAD 1 switch (8S11)	2	3-40
SYSTEM A LGC THRUSTER PAIR CMDS QUAD 1 talkback (8FL9)	2	3-41
SYSTEM A LGC THRUSTER PAIR CMDS QUAD 2 switch (8S12)	2	3-42
SYSTEM A LGC THRUSTER PAIR CMDS QUAD 2 talkback (8FL10)	2	3-42
SYSTEM A LGC THRUSTER PAIR CMDS QUAD 3 switch (8S15)	2	3-42A
SYSTEM A LGC THRUSTER PAIR CMDS QUAD 3 talkback (8FL13)	2	3-42B
SYSTEM A LGC THRUSTER PAIR CMDS QUAD 4 switch (8S16)	2	3-42C
SYSTEM A LGC THRUSTER PAIR CMDS QUAD 4 talkback (8FL14)	2	3-43
SYSTEM A MAIN SOV switch (8S7)	2	3-51
SYSTEM A MAIN SOV talkback (8FL5)	2	3-51
SYSTEM B ASC FEED 1 switch (8S10)	2	3-44
SYSTEM B ASC FEED 2 switch (8S23)	2	3-45
SYSTEM B ASC FUEL talkback (8FL8)	2	3-44
SYSTEM B ASC OXID talkback (8FL19)	2	3-45
SYSTEM B LGC THRUSTER PAIR CMDS QUAD 1 switch (8S13)	2	3-46
SYSTEM B LGC THRUSTER PAIR CMDS QUAD 1 talkback (8FL11)	2	3-46A
SYSTEM B LGC THRUSTER PAIR CMDS QUAD 2 switch (8S14)	2	3-46B
SYSTEM B LGC THRUSTER PAIR CMDS QUAD 2 talkback (8FL12)	2	3-46C
SYSTEM B LGC THRUSTER PAIR CMDS QUAD 3 switch (8S17)	2	3-47
SYSTEM B LGC THRUSTER PAIR CMDS QUAD 3 talkback (8FL15)	2	3-48
SYSTEM B LGC THRUSTER PAIR CMDS QUAD 3 switch (8S18)	2	3-48
SYSTEM B LGC THRUSTER PAIR CMDS QUAD 4 talkback (8FL16)	2	3-49

Table 3-1. Controls and Displays - Alphabetical Index (cont)

NAME AND REFERENCE DESIGNATION	PANEL NO.	PAGE NO.
SYSTEM B MAIN SOV switch (8S9)	2	3-52
SYSTEM B MAIN SOV talkback (8FL7)	2	3-52
-T-		
T/W indicator (9M4)	1	3-21
TELEMETRY BIOMED switch (13S3)	12	3-115
TELEMETRY PCM switch (13S13)	12	3-116
TEMP condition indicator (3DS8)	4	3-75
TEMP indicator (10M4)	1	3-19
TEMP indicator (18M1)	3	3-68
TEMP indicator (System A) (8M2A)	2	3-37
TEMP indicator (System B) (8M2B)	2	3-37
TEMP MONITOR selector switch (18S10)	3	3-68
TEMP/PRESS MON selector switch (8S19)	2	3-50
TEST/MONITOR selector switch (17S8)	3	3-60
THR CONT switch (1S11)	1	3-24
Throttle/jets select lever (CDR) (1H1)	TTCA	3-151
Throttle/jets select lever (LMP) (1H2)	TTCA	3-151
THRUST indicator (9M7)	1	3-17
THRUST indicator power failure indicator (16DS92)	1	3-18
Thrust/translation controller (CDR) (1X1)	TTCA	3-150
Thrust/translation controller (LMP) 1X2)	TTCA	3-150
TRACK MODE switch (14S3)	12	3-116
TRACKER condition indicator (3DS12)	4	3-77
TTCA/TRANSL switches (CDR & LMP) (1S20) (1S22)	4	3-75
-U-		
UP DATA LINK switch (13S16)	12	3-109
UPLINK ACTY condition indicator (3DS1)	4	3-75
-V-		
VEL light (3DS204)	4	3-77
VERB pushbutton (3S3)	4	3-78
VERB display indicator (3M2)	4	3-78
VHF A switch (CDR) (15AS2)	8	3-95
VHF A switch (LMP) (15BS2)	12	3-111
VHF A RCVR switch (13S10)	12	3-114
VHF A VOLUME thumbwheel (CDR) (15AR12)	8	3-95
VHF A VOLUME thumbwheel (LMP) (15BR12)	12	3-111
VHF A XMTR switch (13S7)	12	3-114
VHF selector switch (14S6)	12	3-117
VHF B RCVR switch (13S15)	12	3-115
VHF B switch (CDR) (15AS9)	8	3-95
VHF B switch (LMP) (15BS9)	12	3-111
VHF B VOLUME thumbwheel (CDR) (15AR13)	8	3-96
VHF B VOLUME thumbwheel (LMP) (15BR13)	12	3-112
VHF B XMTR switch (13S12)	12	3-115
VOLTS indicator (4M2)	14	3-119
VOX SENS thumbwheel (CDR) (15AR8)	8	3-95
VOX SENS thumbwheel (LMP) (15BR8)	12	3-111

Table 3-1. Controls and Displays - Alphabetical Index (cont)

NAME AND REFERENCE DESIGNATION	PANEL NO.	PAGE NO.
-W-		
WATER SEP SEL valve (7H10)	ECS	3-147
WATER TANK SELECT valve (7H14)	ECS	3-143
-X-		
X-Pointer indicator (CDR) (9M2)	1	3-16
X-Pointer indicator (LMP) (9M3)	2	3-55
X-Pointer indicator power failure indicator (16DS91)	1	3-16
X-Pointer indicator power failure indicator (16DS97)	2	3-55
X-POINTER SCALE switch (CDR) (9S17)	1	3-17
X-POINTER SCALE switch (LMP) (9S18)	3	3-73
XMTR/RCVR switch (13S8)	12	3-112
-Y-		
YAW control (14B1)	12	3-117
YAW indicator (14M4)	12	3-117

Location/ Ref Des	Name and Position	Function	Circuit Breaker	Power Source	Remarks
Panel 1	WARNING LIGHTS				
6DS2	ASC PRESS (MPS)	Goes on if pressure in either ascent helium tank drops below 2,773 psia prior to staging or if blanket pressure in fuel or oxidizer lines at bipropellant valves drops below 120 psia.	LTG: ANUN/ DOCK/ COMPNT (panel 11 and/or panel 16)	CDR's 28-vdc bus LMP's 28-vdc bus	Light goes off when deadface switch is actuated by separation of descent and ascent stages, or by restoration of fuel or oxidizer blanket pressure.
6DS3	DES REG (MPS)	Goes on if, after pressurization, pressure in descent helium lines downstream of regulators exceeds 260 psia or drops below 220 psia.	LTG: ANUN/ DOCK/ COMPNT (panel 11 and/or panel 16)	CDR's 28-vdc bus LMP's 28-vdc bus	Light goes off when nominal pressure is restored or when ascent and descent stages are separated.
6DS4	DES QTY (MPS)	Goes on if, before staging, descent tanks contain propellants for only approximately 2 minutes burn time at hover (25%) thrust.	LTG: ANUN/ DOCK/ COMPNT (panel 11 and/or panel 16)	CDR's 28-vdc bus LMP's 28-vdc bus	MASTER ALARM light and tone are inhibited for this warning light.
6DS6	CES AC (GN&CS)	Goes on if a-c voltage in control electronics section of GN&CS is out of tolerance.	LTG: ANUN/ DOCK/ COMPNT (panel 11 and/or panel 16)	CDR's 28-vdc bus LMP's 28-vdc bus	A-C voltage (28 volts, single-phase; or 26 volts, 800 cps, three-phase) is required. Light goes off when GYRO TEST switch is placed in POS RT or NEG RT position.
6DS7	CES DC (GN&CS)	Goes on if voltage of any d-c power supply in CES is out of tolerance.	LTG: ANUN/ DOCK/ COMPNT (panel 11 and/or panel 16)	CDR's 28-vdc bus LMP's 28-vdc bus	D-C power supply voltages are +15, -15, +4.3, +6, and -6 volts. Light goes off when GYRO TEST switch is placed in POS RT or NEG RT position.

Location/ Ref Des	Name and Position	Function	Circuit Breaker	Power Source	Remarks
Panel 1 (cont)					
6DS8	AGS (GN&CS)	Goes on if any ASA power supply fails or if fail signal is generated by AEA test assembly.	LTG: ANUN/ DOCK/ COMPNT (panel 11 and/or panel 16)	CDR's 28-vdc bus LMP's 28-vdc bus	Light goes off when O_2/H_2O Qty MON switch is momentarily set to C/W RESET. Power supply voltages are +28 and +12 volts dc, and 28 volts 400 cps. Signal is inhibited when AGS STATUS switch is set to OFF. Thermal switch is in series with +12 vdc. Switch opens at 150±5° F, closes at 130±5° F. When AGS STATUS switch is moved from OFF to STBY, AGS light flashes and MASTER ALARM goes on. When switch is moved from STBY to OPR, AGS light goes on, then off and MASTER ALARM goes off.
6DS9	LGC (GN&CS)	Goes on if LGC power supplies, counter, or scaler fail.	LTG: ANUN/ DOCK/ COMPNT (panel 11 and/or panel 16)	CDR's 28-vdc bus LMP's 28-vdc bus	Power supply voltages are +28, +14, or +4 volts dc. Light goes off when nominal voltage is restored or GUID CONT switch is set to AGS.
6DS10	ISS (GN&CS)	Lights if failure of IMU, PIPA during main engine thrusting, or CDU occurs.	LTG: ANUN/ DOCK/ COMPNT (panel 11 and/or panel 16)	CDR's 28-vdc bus LMP's 28-vdc bus	Light goes off when GUID CONT switch is set to AGS.
6DS11	RCS TCA (RCS)	Goes on if GN&CS issues firing command to primary coils of specific thruster, but there is no chamber pressure at that thruster. Goes on if opposing collinear jets are on simultaneously.	LTG: ANUN/ DOCK/ COMPNT (panel 11 and/or panel 16)	CDR's 28-vdc bus LMP's 28-vdc bus	Light is extinguished when thruster pair isolation valve associated with failed TCA is closed.

Location/ Ref Des	Name and Position	Function	Circuit Breaker	Power Source	Remarks
Panel 1 (cont)					
6DS12	RCS A REG (RCS)	Goes on when pressure sensed by pressure transducer downstream of system A pressure regulators exceeds 218 psia or drops below 165 psia.	LTG: ANUN/ DOCK/ COMPNT (panel 11 and/or panel 16)	CDR's 28-vdc bus LMP's 28-vdc bus	Light is inhibited when SYSTEM A MAIN SOV switch is set to CLOSE.
6DS13	RCS B REG (RCS)	Goes on when pressure sensed by pressure transducer downstream of system B pressure regulators exceeds 218 psia or drops below 165 psia.	LTG: ANUN/ DOCK/ COMPNT (panel 11 and/or panel 16)	CDR's 28-vdc bus LMP's 28-vdc bus	Light is inhibited when SYSTEM B MAIN SOV switch is set to CLOSE.
6DS14	DC BUS (EPS)	Goes on if d-c voltage drops below 26.5 volts on either Commander's or LM Pilot's d-c bus.	LTG: ANUN/ DOCK/ COMPNT (panel 11 and/or panel 16)	CDR's 28-vdc bus LMP's 28-vdc bus	Light goes off when nominal voltage is restored.
6DS16	CABIN (ECS)	Goes on if cabin pressure drops below 4.15±0.15 psia.	LTG: ANUN/ DOCK/ COMPNT (panel 11 and/or panel 16)	CDR's 28-vdc bus LMP's 28-vdc bus	Light goes on when cabin pressure is restored to 4.8 psia. It does not light during intentional cabin depressurization.
6DS17	SUIT / FAN (ECS)	Goes on if pressure within suit drops below 3.12 psia or if suit circulating fan No. 2 fails.	LTG: ANUN/ DOCK/ COMPNT (panel 11 and/or panel 16)	CDR's 28-vdc bus LMP's 28-vdc bus	Light goes on when nominal suit pressure is restored.

Location/ Ref Des	Name and Position	Function	Circuit Breaker	Power Source	Remarks
Panel 1 (cont)					
9M12	MISSION TIMER indicator	Displays digital readout of elapsed time in hours, minutes, and seconds. Indicator is controlled with TIMER CONT and SLEW CONT switches on panel 5. Maximum time displayed is 999 hours 59 minutes 59 seconds.	FLIGHT DISPLAYS: MISSION TIMER (panel 11)	CDR's 28-vdc bus	MISSION TIMER indicator can only count up. If PCMTE timing pulses fail, an internal tuning fork supplies the 10 pps clock frequency, and a display appears before the first indicator digit.
9M11	EVENT TIMER indicator	Displays digital readout of time (0 minutes 0 seconds to 59 minutes 59 seconds). EVENT TIMER is controlled with RESET/ COUNT, TIMER CONT, SLEW CONT MIN, and SLEW CONT SEC switches on panel 3.	FLT DISP: EVENT TIMER/SE FDAI (panel 16)	LMP's 28-vdc bus	EVENT TIMER indicator can count up or down. If it fails, MISSION TIMER indicator can be used.
9M2	X-Pointer indicator	Displays forward and lateral velocities, lateral velocities only, or rendezvous radar LOS elevation and azimuth angular rates, depending upon setting of RATE/ ERR MON switch and MODE SEL switch.	FLIGHT DISPLAYS: CDR X-PNTR (panel 11)	CDR's 28-vdc bus	Forward and lateral velocities are coincident with LM Z and Y body axis velocities when PGNS drives display. When LR drives display, forward and lateral velocities are coincident with LM Z and Y axis (from hi-gate point to touchdown). When AGS drives display, lateral Y-axis velocity only is displayed. When RR is selected, LOS rates are displayed.
16DS91	X-Pointer indicator power failure indicator	Red light goes on when power to indicator is interrupted.	N/A	N/A	
1DS1	LUNAR CONTACT light	Light goes on when landing gear probe touches surface, to indicate that engine should be turned off.	N/A	N/A	Light goes off when either engine stop switch is pressed.

Location/ Ref Des	Name and Position	Function	Circuit Breaker	Power Source	Remarks
Panel 1 (cont)					
9S17	X-POINTER SCALE switch	Controls scale range of X-pointer indicator.	N/A	N/A	
	HI MULT	When LOS azimuth and elevation rates are displayed, this position provides a scale of ±20 mrad/sec. When horizontal velocities are displayed, this position illuminates the X10 multiplier to provide range of ±200 fps.			
	LO MULT	When LOS azimuth and elevation rates are displayed, this position illuminates the X.1 multiplier to provide a range of ±2 mrad/sec. When horizontal velocities are displayed, this position provides range of ±20 fps.			
9M7	THRUST indicator	Displays descent engine chamber pressure, which corresponds to thrust on ENG scale (left pointer) and manual or LGC thrust commands to the engine on CMD scale (right pointer). Both scales read from 0% to 100%. Automatic or manual throttle commands can be displayed, depending on setting of THR CONT switch. The CMD (right) scale indicates 10% thrust command, even when engine is not firing because indicator input is not the actual thrust command input to engine unless the engine is on, and TTCA is at minimum position. Thrust command to engine, in AUTO mode, (GUID CONT switch is set to PGNS) is sum of thrust commands from LGC and TTCA. TTCA provides a minimum thrust	FLIGHT DISPLAYS: THRUST (panel 11)	CDR's 28-vdc bus	Normally, during LGC command authority, both pointers will be aligned. If not, a malfunction exists or manual throttle authority is being introduced to enable

Location/ Ref Des	Name and Position	Function	Circuit Breaker	Power Source	Remarks
Panel 1 (cont)		command of 10% at all times; it cannot be set to zero. When THR CONT switch is set to AUTO position and TTCA is at minimum position, LGC commands 10% less than required and is summed with 10% command from TTCA to provide required thrust level. When THR CONT switch is set to MAN, LGC commands are removed and all thrust commands originate from TTCA.			smooth transition to full manual control. If manual control is desired, THR CONT switch is set to MAN when CMD pointer reaches 10%; pointers will then realign. If TTCA control is moved beyond minimum thrust position, LGC commands correspondingly less thrust. It is, therefore, possib in AUTO mode to command more thrust than LGC requires, but not possible to command less.
16DS92	THRUST indicator power failure indicator	Red light goes on when power to indicator is interrupted.	N/A	N/A	
	MAIN PROPULSION QUANTITY	Indicate quantity of propellant remaining in descent tanks.	AC BUS B: He/PQGS PROPUL DISP (panel 11)	CDR's 115-vac bus B	Quantity indicator is operative from 0% to 95%.
10M5A	OXIDIZER	Displays digital readout of percentage (0% to 95%) of usable oxidizer remaining in descent tank selected with PRPLNT QTY MON switch.			
10M5B	FUEL	Displays digital readout of percentage (0% ot 95%) of usable fuel remaining in descent tank selected with PRPLNT QTY MON switch.			
10M1	MAIN PROPULSION HELIUM indicator	Displays digital readout of supercritical helium pressure in descent cryogenic storage vessel, pressure in descent ambient helium bottle, and temperature or pressure	AC BUS B: He/PQGS PROPUL DISP (panel 11)	CDR's 115-vac bus B	

Location/ Ref Des	Name and Position	Function	Circuit Breaker	Power Source	Remarks
Panel 1 (cont)		in ascent helium tanks, as selected with HELIUM MON switch.			
10M4	TEMP indicator	Indicates fuel and oxidizer bulk temperature (+40° to +100°F) in ascent or descent propellant tanks, as selected with PRPLNT TEMP/ PRESS MON switch.	PROPUL: DISP/ENG OVRD LOGIC (panel 16)	LMP's 28-vdc bus	
10M3	PRESS indicator	Indicates fuel and oxidizer pressures (0 to 300 psia) for ascent or descent propellant sections, as selected with PRPLNT TEMP/ PRESS MON switch.	PROPUL: DISP/ENG OVRD LOGIC (panel 16)	LMP's 28-vdc bus	
16DS90	PRESS indicator power failure indicator	Red light goes on when power to indicator is interrupted.	N/A	N/A	
6S2	MASTER ALARM pushbutton/light Audible tone	Light flashes when any caution or warning light goes on, except C/W PWR caution and DES QTY warning lights. Initiated in conjunction with MASTER ALARM pushbutton-light and caution/warning array light(s).	LTG: MASTER ALARM (panel 16)	LMP's 28-vdc bus	Pressing Commander's or LM Pilots switch-light extinguishes both MASTER ALARM lights and terminates audible tone, but has no effect on caution or warning light(s).
9S2	RATE/ERR MON switch RNDZ RADAR	Selects inputs for FDAI and X-pointer indicator. Shaft and trunnion angles from the RR are displayed by pitch and yaw error needles of FDAI; LOS azimuth and elevation rates are displayed on X-Pointer indicator (illuminating LOS AZ and LOS ELEV).	N/A	N/A	When switch is set to LDG RDR/ CMPTR, data input is dependent upon settings of MODE SEL and ATTTITUDE MON switches.

Location, Ref Des	Name and Position	Function	Circuit Breaker	Power Source	Remarks
Panel 1 (cont)	LDG RDR/CMPTR	Vehicle attitude errors (PGNS or AGS as selected with ATTITUDE MON switch) are displayed by FDAI error needles. Forward and lateral velocities from the LR (PGNS or AGS as selected with MODE SEL switch) are displayed on the X-pointer indicator (illuminating LAT VEL and FWD VEL).			AGS provides only lateral velocity data.
9S3	ATTITUDE MON switch PGNS AGS	Selects input for FDAI total attitude display and input for attitude error needles during landing. LM total attitude signals, after conditioning by GASTA, are fed to FDAI ball; LGC attitude error signals are fed to FDAI pitch, roll, and yaw error needles. AGS LM total attitude signals are fed to FDAI ball; AGS attitude error signals are fed to FDAI pitch, roll, and yaw error needles.	N/A	N/A	
9M1	Flight director attitude indicator (FDAI)	Displays total vehicle attitudes, attitude rates and attitude errors, or vehicle attitude, attitude rates, and RR shaft and trunnion angles, depending on setting of RATE/ERR MON switch. Setting ATTITUDE MON switch se-selects PGNS or AGS as source of vehicle total attitude and attitude errors displayed on FDAI. Shaft and trunnion angles are displayed by pitch and yaw error needles, respectively, when RATE/ERR MON switch is set to RNDZ RADAR.	AC BUS A: CDR FDAI and FLIGHT DISPLAYS: CDR FDAI (panel 11)	CDR's 115-vac bus A CDR's 28-vdc bus	Attitude rates displayed are always obtained from CES rate gyro assembly.

Location/ Ref Des	Name and Position	Function	Circuit Breaker	Power Source	Remarks
Panel 1 (cont)					
9M9	Altitude/range indicator	Displays range/range rate data or altitude/altitude rate data as selected with RNG/ALT MON switch. Range/range rate data are from RR. Altitude/altitude rate data are from LR, PGNS, or AGS, as selected with MODE SEL switch. When LR data is selected, true altitude and altitude rate data are available from low-gate point to touchdown if LM X-axis is vertical. Before reaching low-gate point, only true altitude data are available from LR. When PGNS or AGS is selected, inertially derived altitude and altitude rate data are available for display.	FLIGHT DISPLAYS: RNG/RNG RT ALT/ALT RT and AC BUS A: RNG/RNG RT ALT/ALT RT (panel 11)	CDR's 28-vdc bus A	
9M4	T/W indicator	Displays instantaneous X-axis acceleration in lunar g units (1 lunar g = 5.23 ft/sec^2).	N/A	N/A	Indicator, a self-contained accelerometer, may be used to provide a gross check of engine performance, because any given throttle setting provides specific acceleration when the vehicle has given mass.
9S6	GUID CONT switch PGNS	Selects PGNS or AGS for guidance control mode of LM. Provides 800-cps power to activate ACA and TTCA, proportional rate command inputs to LGC from ACA, LGC engine on-off signals, descent engine gimbal trim command outputs from LGC, translation on-off commands from TTCA, enabling signals for primary preamplifiers of ATCA, and applies follow-up signal to AEA.	N/A	N/A	Switch is spring loaded to center (lock) position. When AGS mode is selected, PGNS remains operational. PGNS data may be displayed if desired.

Location/ Ref Des	Name and Position	Function	Circuit Breaker	Power Source	Remarks
Panel 1 (cont)					
	AGS	Provides 800-cps power to activate ACA and TTCA, proportional rate commands to ATCA from ACA, AGS mode trim command, and enabling signals to the abort preamplifiers of ATCA.			
9S9	MODE SEL switch	Selects radar or computer data for display on X-Pointer and altitude/range indicators.	N/A	N/A	Data from selected source are displayed on appropriate horizontal velocity indicator only when RATE/ERR MON switches are set to LDG RDR/COMPTR. Data from selected source are displayed on altitude/range indicators only when RNG/ALT MON switch is set to ALT/ALT RT.
	LDG RADAR	Radar altitude, altitude rate, and forward and lateral velocity are displayed.			
	PGNS	LGC-computed altitude, altitude rate, and forward and lateral velocity are displayed.			
	AGS	AGS-computed altitude, altitude rate and lateral velocity are displayed.			
9S4	RNG/ALT MON switch	Selects display legend on altitude/range indicator and displays RR range/range rate data or LR or computer altitude/altitude rate data.	N/A	N/A	
	RNG/RNG RT	RR range and range rate data are displayed on altitude/range indicator.			

Location/ Ref Des	Name and Position	Function	Circuit Breaker	Power Source	Remarks
Panel 1 (cont)					
	ALT/ALT RT	Data from source selected with MODE SEL switch are displayed on altitude/range indicator.			
9S8	SHFT/TRUN ∢ switch	Selects range of RR shaft and trunnion angles to be displayed by FDAI pitch and yaw error needles when either RATE/ERR MON switch is set to RNDZ RADAR.	FLIGHT DISPLAYS: CDR FDAI (panel 11)	CDR's 28-vdc bus	
	±50°	Full deflection of FDAI pitch and yaw error needles indicates shaft and trunnion angles of +50° or -50° or greater.			Less-than-full-deflection positions of needles are linearly proportional to the sine of the shaft and trunnion angles less than +50° or -50°.
	±5°	Full deflection of FDAI pitch and yaw error needles indicates shaft and trunnion angles of +5° or -5° or greater.			Less-than-full-deflection positions of needles are linearly proportional to shaft and trunnion angles less than +5° or -5°.
9S29	RATE SCALE switch	Selects scale factors of roll, pitch, and yaw rate scales of FDAI.	N/A	N/A	
	25°/sec	Selects 25° per second full scale for rate scales.			
	5°/sec	Selects 5° per second full scale for rate scales.			
1S25	ACA PROP switch	Enables isolation of 28 volts, 800 cps to ACA transducer primary coil.	N/A	N/A	If ACA is disabled, only the landing mission phase is affected.
	ENABLE	Enables normal operation of ACA in proportional rate mode.			
	DISABLE	Disables ACA proportional rate command capability.			

Location/ Ref Des	Name and Position	Function	Circuit Breaker	Power Source	Remarks
Panel 1 (cont)					
	ENG THRUST CONT switches				
1S11	THR CONT switch	Permits switching from automatic (LGC) throttle control to manual throttle control.			
	AUTO	LGC command signals are summed with manual command signals from TTCA selected with MAN THROT switch for descent engine throttle control. TTCA always provides minimum 10% command; it cannot be set below this level.			When switch is set to AUTO, THRUST indicator displays LGC command plus 10% fixed bias. Manual throttle commands may be introduced by displacing active TTCA. This causes displayed % THRUST CMD to decrease because only LGC commands plus fixed bias are displayed.
	MAN	Interrupts LGC throttle commands insuring that descent engine throttle is fed only by manual throttle command signals.	STAB/CONT: ENG CONT (panel 11)	CDR's 28-vdc bus	CMD THRUST indicator displays manual throttle commands.
1S10	MAN THROT switch	Selects thrust/translation controller for manual adjustment of descent engine thrust level, if corresponding THROTTLE-JETS control select level is set to THROTTLE. This switch also routes manual throttle commands from controller to DECA.	N/A	N/A	
	CDR	Enables Commander's thrust/translation controller to adjust descent engine thrust level.			
	SE	Enables LM Pilot's thrust/translation controller to adjust descent engine thrust level.			

Location/ Ref Des	Name and Position	Function	Circuit Breaker	Power Source	Remarks
Panel 1 (cont)					
1S1	ENG ARM switch	Provides arming signals to engines.	STAB/CONT: ENG ARM (panel 16)	LMP's 28-vdc bus	Switch is spring loaded to center (lock) position. Regardless of switch setting, appropriate engine is armed if ABORT or ABORT STAGE switches are actuated.
	ASC	Provides arming signal to enable firing of ascent engine and simultaneously signals LGC that engine is armed.	STAB/CONT: ENG CONT and STAB/CONT: ENG START OVRD (panel 11)	CDR's 28-vdc bus	
	OFF	Removes arming signal from engine valves and LGC.			
	DES	Provides arming signal to enable firing descent engine and simultaneously signals LGC that engine is armed.			
1S6	ATT/TRANSL switch	Selects number of jets for X-axis translation maneuvers.	STAB/CONT: ATT DIR CONT (panel 11)	CDR's 28-vdc bus	This control can only be used with AGS.
	4 JETS	Provides four jets for X-axis translation maneuvers.			
	2 JETS	Provides two jets for X-axis translation maneuvers.			
1S9	BAL CPL switch	Selects either balanced pairs of RCS jets in a couple or unbalanced X-axis RCS jets to maintain pitch and roll attitude during ascent engine thrust phase when AGS is in guidance control loop.	N/A	N/A	Used only in conjunction with AGS.
	ON	Applies 28-vdc enable voltage to abort preamplifiers 1, 5, 9, 13.			Normally in this position (balanced couples) during initial phases of ascent, for maximum stabilization and control of any center-of-gravity thrust vector misalignment.

Location/ Ref Des	Name and Position	Function	Circuit Breaker	Power Source	Remarks
Panel 1 (cont)	OFF	Removes enable voltage from abort preamplifiers 1, 5, 9, 13.			After some minimum burn time when balanced-couple operation is not required, switch can be set to OFF to conserve fuel.
10S3	ASCENT He REG 1 switch	Selects inputs to normally open, latching solenoid-operated helium valve upstream of primary pressure regulator.	PROPUL: ASC He REG (panel 16)	LMP's 28-vdc bus	Switch is spring loaded to center position.
	OPEN	Energizes solenoid that drives helium valve to open position.			Gray talkback is displayed when valve is open.
	Center	Removes solenoid excitation; valve remains in last commanded position.			
	CLOSE	Energizes solenoid that drives helium valve to closed position.			Barber-pole talkback is displayed when valve is closed.
10FL1	ASCENT He REG 1 talkback		PROPUL: DISP/ENG OVRD LOGIC (panel 16)	LMP's 28-vdc bus	
	Gray display	Indicates helium primary line solenoid valve controlled by ASCENT He REG 1 switch is open.			
	Barber-pole display	Indicates helium primary line solenoid valve controlled by ASCENT He REG 1 switch is closed.			
10S4	ASCENT He REG 2 switch	Selects inputs to normally open latching solenoid-operated helium valve upstream of secondary pressure regulator.	PROPUL: ASC He REG (panel 16)	LMP's 28-vdc	Switch is spring loaded to center position.
	OPEN	Energizes solenoid that drives helium valve to open position.			Gray talkback is displayed when valve is open.

Location/ Ref Des	Name and Position	Function	Circuit Breaker	Power Source	Remarks
Panel 1 (cont)					
	Center	Removes solenoid excitation; valve remains in last commanded position.			
	CLOSE	Energizes solenoid that drives helium valve to closed position.			Barber-pole talkback is displayed when valve is closed.
10FL2	ASCENT He REG 2 talkback		PROPUL: DISP/ENG OVRD LOGIC (panel 16)	LMP's 28-vdc bus	
	Gray display	Indicates helium secondary line solenoid valve controlled by ASCENT He REG 2 switch is open.			
	Barber-pole display	Indicates helium secondary line solenoid valve controlled by ASCENT He REG 2 switch is closed.			
10S5	DESCENT He REG 1 switch	Selects inputs to normally open, latching solenoid-operated helium valve upstream of primary pressure regulator.	PROPUL: DES He REG-VENT (panel 11)	CDR's 28-vdc bus	Switch is spring loaded to center position.
	OPEN	Energizes solenoid that drives helium valve to open position.			Gray talkback is displayed when valve is open.
	Center	Removes solenoid excitation; valve remains in last commanded position.			
	CLOSE	Energizes solenoid that drives helium valve to closed position.			Barber-pole talkback is displayed when valve is closed.
10FL3	DESCENT He REG 1 talkback		PROPUL: DISP/ENG OVRD LOGIC (panel 16)	LMP's 28-vdc bus	
	Gray display	Indicates helium primary line solenoid valve controlled by DESCENT He REG 1 switch is open.			

Location/ Ref Des	Name and Position	Function	Circuit Breaker	Power Source	Remarks
Panel 1 (cont)					
	DES 2	Enables discrete outputs from quantity gaging sensor probes of oxidizer tank No. 2 and fuel tank No. 2 to QUANTITY indicators.			
	OFF	Removes d-c power from gaging system; quantities are not displayed on QUANTITY indicators.			
10S1	PRPLNT TEMP/PRESS MON switch	Selects inputs to propellant temperature- and pressure-indicating devices from ascent or descent propellant tanks.	PROPUL: DISP/ENG OVRD LOGIC (panel 16)	LMP's 28-vdc bus	Switch permits monitoring propellant tank temperatures and pressures.
	ASC	Connects output of temperature and pressure sensors in ascent propellant tanks to TEMP and PRESS indicators.			
	DES 1	Connects output of temperature and pressure sensors in descent fuel and oxidizer tanks No. 1 to TEMP and PRESS indicators.			
	DES 2	Connects output of temperature and pressure sensors in descent fuel and oxidizer tanks No. 2 to TEMP and PRESS indicators.			
10S6	HELIUM MON selector switch	Selects inputs to helium indicating device from descent cryogenic storage vessel, from pressure transducer devices in ascent helium tanks, and from pressure transducer in ambient helium bottle.	N/A	115-vac bus	Switch permits monitoring supercritical helium pressure of descent cryogenic storage vessel, pressure of ascent helium tanks, and ambient pressure of descent ambient helium bottle.
	OFF	Removes power from HELIUM indicator; zeros are displayed.			

Location/ Ref Des	Name and Position	Function	Circuit Breaker	Power Source	Remarks
Panel 1 (cont)	DES AMB PRESS	Connects output of pressure sensor in descent ambient helium bottle to HELIUM indicator.			
	DES SUPCRIT PRESS	Connects output of pressure sensor in descent cryogenic storage vessel to HELIUM indicator.			
	ASC PRESS 1	Connects output of pressure sensor in manifold downstream of ascent helium tank No. 1 and upstream of explosive valve to HELIUM indicator.			
	ASC PRESS 2	Connects output of pressure sensor in manifold downstream of ascent helium tank No. 2 and upstream of explosive valve to HELIUM indicator.			

PANEL 1

Location/ Ref Des	Name and Position	Function	Circuit Breaker	Power Source	Remarks
Panel 2					
	CAUTION LIGHTS				
6DS21	ASC HI REG (MPS)	Goes on if helium pressure downstream of regulators in ascent helium lines exceeds 220 psia.	LTG: ANUN/ DOCK/ COMPNT (panel 11 and/or panel 16)	CDR's 28-vdc bus LMP's 28-vdc bus	Goes off when pressure is reduced to nominal values.
6DS22	ASC QTY (MPS)	Goes on if fuel or oxidizer in ascent tank is sufficient for only 10-second burn.	LTG: ANUN/ DOCK/ COMPNT (panel 11 and/or panel 16)	CDR's 28-vdc bus LMP's 28-vdc bus	Signal permits manual shutdown of ascent engine to avoid explosive potential, resulting from depletion of fuel before oxidizer or vice versa. If light goes on, ascent engine thrusting is not available for midcourse correction or rendezvous braking.
6DS23	ENG GMBL (MPS)	Lights if difference between gimbal drive signal and gimbal response from Y- or Z- axis trim function is sensed.	LTG: ANUN/ DOCK/ COMPNT (panel 11 and/or panel 16)	CDR's 28-vdc bus LMP's 28-vdc bus	GDA signal is enabled only when descent engine is armed and is disabled after separation of ascent and descent stages.
6DS26	INVERTER (EPS)	Goes on if a-c bus voltage is less than 112 volts, or if a-c bus frequency is less than 398 cps or exceeds 402 cps.	LTG: ANUN/ DOCK/ COMPNT (panel 11 and/or panel 16)	CDR's 28-vdc bus LMP's 28-vdc bus	Light goes off when within-tolerance conditions are restored or when INVERTER switch is set to OFF.

PANEL 2

Location/ Ref Des	Name and Position	Function	Circuit Breaker	Power Source	Remarks
Panel 2 (cont)					
6DS27	BATTERY (EPS)	Goes on if overcurrent, reverse current, or overtemperature occurs in any descent or ascent battery.	LTG: ANUN/ DOCK/ COMPNT (panel 11 and/or panel 16)	CDR's 28-vdc bus LMP's 28-vdc bus	Light goes off when nominal conditions are restored, or if affected battery is turned off.
6DS28	RNDZ RDR (GN&CS)	Goes on if RR data-not-good condition occurs.	LTG: ANUN/ DOCK/ COMPNT (panel 11 and/or panel 16)	CDR's 28-vdc bus LMP's 28-vdc bus	Signal is enabled only when rendezvous radar selector switch is set to AUTO TRACK. Light goes off when data-good condition is restored or RR is turned off.
6DS30	PRE AMPS (RCS)	Goes on if either of two parallel redundant -4.7-volt d-c regulated power supplies that provide power to RCS jet preamplifiers are out of tolerance.	LTG: ANUN/ DOCK/ COMPNT (panel 11 and/or panel 16)	CDR's 28-vdc bus LMP's 28-vdc bus	Light goes off when DES BATS switch is set to DEADFACE or ABORT pushbutton is pressed.

Location/ Ref Des	Name and Position	Function	Circuit Breaker	Power Source	Remarks
Panel 2 (cont)					
6DS31	ED RELAYS (ED)	Goes on when master arm relay or one of system A or system B stage sequence relays fails.	LTG: ANUN/ DOCK/ COMPNT (panel 11 and/or panel 16)	CDR's 28-vdc bus LMP's 28-vdc bus	Light goes off when ED: LOGIC PWR A or B circuit breakers is opened.
6DS32	RCS	Goes on if pressure of helium tank in system A or B drops below 1, 700 psia.	LTG: ANUN/ DOCK/ COMPNT (panel 11 and/or panel 16)	CDR's 28-vdc bus LMP's 28-vdc bus	Light goes off when TEMP/PRESS MON switch is set to He.
6DS33	HEATER	Goes on if out-of-tolerance temperature exists in RCS thruster quad, RR assembly, LR antenna assembly, or S-band steerable antenna.	LTG: ANUN/ DOCK/ COMPNT (panel 11 and/or panel 16)	CDR's 28-vdc bus LMP's 28-vdc bus	Light goes off when TEMP MONITOR switch is set to affected heater position.
6DS34	C/W PWR (CWEA)	Goes on if any regulated power supply fails.	LTG: ANUN/ DOCK/ COMPNT (panel 11 and/or panel 16)	CDR's 28-vdc bus LMP's 28-vdc bus	Light goes off when normal power is restored to CWEA. Regulated power: +23, +9, +4, and -3 volts.

Location/ Ref Des	Name and Position	Function	Circuit Breaker	Power Source	Remarks
Panel 2 (cont)					
6DS36	ECS	Goes on if glycol pump 1 or 2 fails, CO_2 partial pressure exceeds 7.6 mm Hg, water separator fails, or suit fan No. 1 fails.	LTG: ANUN/ DOCK/ COMPNT (panel 11 and/or panel 16)	CDR's 28-vdc bus LMP's 28-vdc bus	Light goes off when glycol pump pressure is restored, followed by momentarily setting GLYCOL switch to appropriate pump position; nominal water separator speed is restored; or suit fan No. 2 is selected.
6DS37	O_2 QTY (ECS)	Goes on if pressure in descent oxygen tank drops below 135 psia, if less-than-full pressure (less than 684 psia) occurs in either ascent oxygen tank, or if pressure in ascent tank No. 1 is less than 100 psia.	LTG: ANUN/ DOCK/ COMPNT (panel 11 and/or panel 16)	CDR's 28-vdc bus LMP's 28-vdc bus	Light goes off when O_2/H_2O QTY MON switch is set to C/W RESET momentarily. Descent tank low-pressure signal and ascent tanks less-than-full signals are inhibited after staging.
6DS38	GLYCOL (ECS)	Goes on if quantity of glycol in primary coolant loop is low or if primary-loop glycol temperature, sensed at glycol water evaporator outlet, exceeds +50° F.	LTG: ANUN/ DOCK/ COMPNT (panel 11 and/or panel 16)	CDR's 28-vdc bus LMP's 28-vdc bus	Both signals are inhibited after GLYCOL switch is set to INST (SEC) and GLYCOL PUMP SEC circuit breaker (panel 16) is pressed. If lit due to high-temperature condition, goes off when nominal temperature level is restored.

Location/ Ref Des	Name and Position	Function	Circuit Breaker	Power Source	Remarks
Panel 2 (cont)					
6DS40	S-BD RCVR	Goes on if S-band receiver automatic gain control fails.	LTG: ANUN/ DOCK/ COMPNT (panel 11 and/or panel 16)	CDR's 28-vdc bus LMP's 28-vdc bus	Light is enabled when RANGE FUNCTIONS switch is set to TV/CWEA ENABLE. Light goes off when switch is set to OFF/ RESET.
8M2	TEMP indicator (RCS)	Indicates propellant temperature (+20° to +120° F) of systems A and B, by measuring fuel tank temperature (with TEMP/PRESS MON selector switch set to PRPLNT).	RCS: TEMP/ PRESS DISP-FLAGS (panel 16)	LMP's 28-vdc bus	Indicator consists of two fixed dials and vertical movable pointers.
8M1	PRESS indicator (RCS)	Indicates pressure (0 to 4, 000 psia) of helium tank, helium regulator outlet, and fuel or oxidizer manifolds of systems A and B, as selected with TEMP/PRESS MON selector switch.	RCS: TEMP/ PRESS DISP-FLAGS (panel 16)	LMP's 28-vdc bus	Helium tank pressure is obtained by multiplying reading by 10.
16DS96	PRESS indicator power failure indicator	Red light goes on when power to indicator is interrupted.	N/A	N/A	
8M4	QUANTITY indicator (RCS)	Continuously indicates quantity (percentage) of propellant remaining for RCS systems A and B.	RCS SYS B: PQGS/DISP (panel 16)	LMP's 28-vdc bus	
16DS98	QUANTITY indicator power failure indicator	Red light goes on when power to indicator is interrupted.	N/A	N/A	

Location/ Ref Des	Name and Position	Function	Circuit Breaker	Power Source	Remarks
Panel 2 (cont)					
8S8	SYSTEM A ASC FEED 1 switch	Selects inputs to two latching solenoid-operated interconnect valves in ascent propellant line, which control flow of propellant from ascent propellant tanks to RCS thruster.	RCS SYS A: ASC FEED 1 (panel 11)	CDR's 28-vdc bus	Switch is spring loaded to center (lock) position. In event of RCS malfunction, ascent propulsion section can supply propellant to 8 or 16 TCA's (if LM is experiencing a force in +X-direction). This can be accomplished by setting ASC FEED 1 switch for system A or B, or both, to ASC FEED 1 and MAIN SOV switch for system A or B, or both, to CLOSE. (ASC FEED 2 switch must be set to ASC FEED 2.)
	ASC FEED 1	Energizes solenoids that drive ascent propellant interconnect valves to open position.			Gray talkback is displayed when interconnect valves are open.
	Center	Removes solenoide excitation.			Interconnect valves remain in last commanded position.
	CLOSE	Energizes solenoids that drive ascent propellant interconnect valves to closed position.			Barber-pole talkback is displayed when interconnect valves are closed.
8FL6	SYSTEM A ASC FUEL talkback		RCS SYS B: TEMP/ PRESS DISP-FLAGS (panel 16)	LMP's 28-vdc bus	
	Gray display	Indicates ascent fuel interconnect valves are open.			Both ascent fuel interconnect valves must be open to obtain a gray display.
	Barber-pole display	Indicates interconnect valves are closed.			Barber-pole display can be obtained with only one ascent fuel interconnect valve closed.

Location/ Ref Des	Name and Position	Function	Circuit Breaker	Power Source	Remarks
Panel 2 (cont)					
8S22	SYSTEM A ASC FEED 2 switch	Selects inputs to two latching solenoid-operated interconnect valves in ascent propellant line, which control flow of propellant from ascent propellant tanks to RCS thrusters.	RCS SYS A: ASC FEED 2 (panel 11)	CDR's 28-vdc bus	Switch is spring loaded to center (lock) position. In event of RCS malfunction, ascent propulsion section can supply propellant to 8 or 16 TCA's, (if LM is experiencing a force in +X-direction). This can be accomplished by setting ASC FEED 2 switch for system A and B, or both, to ASC FEED 2 and MAIN SOV switch for system A or B, or both, to CLOSE. (ASC FEED 1 switch must be set to ASC FEED 1.)
	ASC FEED 2	Energizes solenoids that drive ascent propellant interconnect valves to open position.			Gray talkback is displayed when interconnect valves are open.
	Center	Removes solenoid excitation.			Interconnect valves remain in last commanded position.
	CLOSE	Energizes solenoids that drive ascent propellant interconnect valves to closed position.			Barber-pole talkback is displayed when interconnect valves are closed.
8FL18	SYSTEM A ASC OXID talkback		RCS SYS B: TEMP/ PRESS DISP-FLAGS (panel 16)	LMP's 28-vdc bus	
	Gray display	Indicates ascent oxidizer interconnect valves are open.			Both ascent oxidizer interconnect vlaves must be open to obtain a gray display.
	Barber-pole display	Indicates interconnect valves are closed.			Barber-pole display can be obtained with only one ascent oxidizer interconnect valve closed.

Location/ Ref Des	Name and Position	Function	Circuit Breaker	Power Source	Remarks
Panel 2 (Cont)					
8S11	SYSTEM A LGC THRUSTER PAIR CMDS QUAD 1 switch		N/A	N/A	
	ENABLE	Permits normal LGC command of system A quadrant 1 jet firing.			Gray talkback is displayed.
	DISABLE	Provides signal to LGC to inhibit firing commands to system A quadrant 1 jets. Inhibits CWEA and removes TCA failure indication.			Barber-pole talkback is displayed.
8FL9	SYSTEM A LGC THRUSTER PAIR CMDS QUAD 1 talkback (LM 10 and subq)	Indicates enable or disable status of system A quadrant 1 LGC commands.	RCS SYS B: TEMP/ PRESS DISP-FLAGS (panel 16)	LMP's 28-vdc bus	
	Gray display	Indicates normal LGC command of system A quadrant 1 jet firing.			
	Barber-pole display	Indicates LGC command of system A quadrant 1 jet firing is inhibit.			
	Red display	Indicates system A quadrant 1 TCA failed to fire on LGC command.			

Location/ Ref Des	Name and Position	Function	Circuit Breaker	Power Source	Remarks
8S12	SYSTEM A LGC THRUSTER PAIR CMDS QUAD 2 switch		N/A	N/A	
	ENABLE	Permits normal LGC command of system A quadrant 2 jet firing.			Gray talkback is displayed.
	DISABLE	Provides signal to LGC to inhibit firing commands to system A quadrant 2 jets. Inhibits CWEA and removes TCA-failure indication.			Barber-pole talkback is displayed.
8FL10	SYSTEM A LGC THRUSTER PAIR CMDS QUAD 2 talkback	Indicates enable or disable status of system A quadrant 1 LGC commands.	RCS SYS B: TEMP/ PRESS DISP-FLAGS (panel 16)	LMP's 28-vdc bus	
	Gray display	Indicates normal LGC command of system A quadrant 2 jet firing.			
	Barber-pole display	Indicates LGC command of system A quadrant 2 jet firing is inhibited.			
	Red display	Indicates system A quadrant 2 TCA failed to fire on LGC command.			

Location/ Ref Des	Name and Position	Function	Circuit Breaker	Power Source	Remarks
8S15	SYSTEM A LGC THRUSTER PAIR CMDS QUAD 3 switch		N/A	N/A	
	ENABLE	Permits normal LGC command of system A quadrant 3 jet firing.			Gray talkback is displayed.
	DISABLE	Provides signal to LGC to inhibit firing commands to system A quadrant 3 jets. Inhibits CWEA and removes TCA-failure indication.			Barber-pole talkback is displayed.
8FL13	SYSTEM A LGC THRUSTER PAIR CMDS QUAD 3 talkback	Indicates enable or disable status of system A quadrant 3 LGC commands.	RCS SYS B: TEMP/ PRESS DISP- FLAGS (panel 16)	LMP's 28-vdc bus	
	Gray display	Indicates normal LGC command of system A quadrant 3 jet firing.			
	Barber-pole display	Indicates LGC command of system A quadrant 3 jet firing is inhibited.			
	Red display	Indicates system A quadrant 3 TCA failed to fire on LGC command			

Location/ Ref Des	Name and Position	Function	Circuit Breaker	Power Source	Remarks
8S16	SYSTEM A LGC THRUSTER PAIR CMDS QUAD 4 switch		N/A	N/A	
	ENABLE	Permits normal LGC command of system A quadrant 4 jet firing.			Gray talkback is displayed.
	DISABLE	Provides signal to LGC to inhibit firing commands to system A quadrant 4 jets. Inhibits CWEA and removes TCA-failure indication.			Barber-pole talkback is displayed.
8FL14	SYSTEM A LGC THRUSTER PAIR CMDS QUAD 4 talkback	Indicates enable or disable status of system A quadrant 4 LGC commands.	RCS SYS B: TEMP/ PRESS DISP-FLAGS (panel 16)	LMP's 28-vdc bus	
	Gray display	Indicates normal LGC command of system A quadrant 4 jet firing.			
	Barber-pole display	Indicates LGC command of system A quadrant 4 jet firing is inhibited.			
	Red display	Indicates system A quadrant 4 TCA failed to fire on LGC command.			

Location/ Ref Des	Name and Position	Function	Circuit Breaker	Power Source	Remarks
Panel 2 (cont)					
8S10	SYSTEM B ASC FEED 1 switch	Selects inputs to two latch-type solenoid-operated interconnect valves in ascent propellant line, which control flow of propellant from ascent propellant tanks to RCS thrusters.	RCS SYS B: ASC FEED 1 (panel 16)	LMP's 28-vdc bus	Switch is spring loaded to center (lock) position. In event of RCS malfunction, ascent propulsion section can supply propellant to 8 or 16 TCA's. (if LM is experiencing a force in +X-direction). This can be accomplished by setting ASC FEED 1 switch for system A or B, or both, to ASC FEED 1 and MAIN SOV switch for system A or B, or both, to CLOSE. (ASC FEED 2 switch must be set to ASC FEED 2.)
	ASC FEED 1	Energizes solenoids that drive ascent propellant interconnect valves to open position.			Gray talkback is displayed when interconnect valves are open.
	Center	Removes solenoid excitation.			Interconnect valves remain in last commanded position.
	CLOSE	Energizes solenoids that drive ascent propellant interconnect valves to closed position.			Barber-pole talkback is displayed when interconnect valves are closed.
8FL8	SYSTEM B ASC FUEL talkback		RCS SYS B: TEMP/ PRESS DISP-FLAGS (panel 16)	LMP's 28-vdc bus	
	Gray display	Indicates ascent fuel interconnect valves are open.			Both ascent fuel interconnect valves must be open to obtain a gyro display.
	Barber-pole display	Indicates interconnect valves are closed.			Barber-pole display can be obtained with only one ascent fuel interconnect valve closed.

Location/ Ref Des	Name and Position	Function	Circuit Breaker	Power Source	Remarks
Panel 2 (cont)					
8S23	SYSTEM B ASC FEED 2 switch	Selects inputs to two latch-type solenoid-operated interconnect valves in ascent propellant line, which control flow of propellant from ascent propellant tanks to RCS thrusters.	RCS SYS B: ASC FEED 2 (panel 16)	LMP's 28-vdc bus	Switch is spring loaded to center (lock) position. In event of RCS malfunction, ascent propulsion section can supply propellant to 8 or 16 TCA's, (if LM is experiencing a force in +X-direction). This can be accomplished by setting ASC FEED 2 switch for system A or B, or both, to ASC FEED 2 and MAIN SOV switch for system A or B, or both, to CLOSE. (ASC FEED 1 switch must be set to ASC FEED 2.)
	ASC FEED 2	Energizes solenoids that drive ascent propellant interconnect valves to open position.			Gray talkback is displayed when interconnect valves are open.
	Center	Removes solenoid excitation.			Interconnect valves remain in last commanded position.
	CLOSE	Energizes solenoids that drive ascent propellant interconnect valves to closed position.			Barber-pole talkback is displayed when interconnect valves are closed.
8FL19	SYSTEM B ASC OXID talkback		RCS SYS B: TEMP/ PRESS DISP-FLAGS (panel 16)	LMP's 28-vdc bus	
	Gray display	Indicates ascent oxidizer interconnect valves are open.			Both ascent oxidizer interconnect valves must be open to obtain a gray display.
	Barber-pole display	Indicates interconnect valves are closed.			Barber-pole display can be obtained with only one ascent oxidizer interconnect valve closed.

Location/ Ref Des	Name and Position	Function	Circuit Breaker	Power Source	Remarks
Panel 2 (cont)					
8S13	SYSTEM B LGC THRUSTER PAIR CMDS QUAD 1 switch		N/A	N/A	
	ENABLE	Permits normal LGC command of system B quadrant 1 jet firing.			Gray talkback is displayed.
	DISABLE	Provides signal to LGC to inhibit firing commands to system B quadrant 1 jets. Inhibits CWEA and removes TCA-failure indication.			Barber-pole talkback is displayed.
8FL11	SYSTEM B LGC THRUSTER PAIR CMDS QUAD 1 talkback	Indicates enable or disable status of system B quadrant 1 LGC commands.	RCS SYS B: TEMP/ PRESS DISP-FLAGS (panel 16)	LMP's 28-vdc bus	
	Gray display	Indicates normal LGC command of system B quadrant 1 jet firing.			
	Barber-pole display	Indicates LGC command of system B quadrant 1 jet firing is inhibited.			
	Red display	Indicates system B quadrant 1 TCA failed to fire on LGC command.			

Location/ Ref Des	Name and Position	Function	Circuit Breaker	Power Source	Remarks
Panel 2 (cont)					
8S14	SYSTEM B LGC THRUSTER PAIR CMDS QUAD 2 switch		N/A	N/A	
	ENABLE	Permits normal LGC command of system B quadrant 2 jet firing.			Gray talkback is displayed.
	DISABLE	Provides signal to LGC to inhibit firing commands to system B quadrant 2 jets. Inhibits CWEA and removes TCA-failure indication.			Barber-pole talkback is displayed.
8FL12	SYSTEM B LGC THRUSTER PAIR CMDS QUAD 2 talkback	Indicates enable or disable status of system B quadrant 2 LGC commands.	RCS SYS B: TEMP/ PRESS DISP-FLAGS (panel 16)	LMP's 28-vdc bus	
	Gray display	Indicates normal LGC command of system B quadrant 2 jet firing.			
	Barber-pole display	Indicates LGC command of system B quadrant 2 jet firing is inhibited.			
	Red display	Indicates system B quadrant 2 TCA failed to fire on LGC command.			

Location/ Ref Des	Name and Position	Function	Circuit Breaker	Power Source	Remarks
Panel 2 (cont)					
8S17	SYSTEM B LGC THRUSTER PAIR CMDS QUAD 3 switch (LM 10 and subq)		N/A	N/A	
	ENABLE	Permits normal LGC command of system B quadrant 3 jet firing.			Gray talkback is displayed.
	DISABLE	Provides signal to LGC to inhibit firing commands to system B quadrant 3 jets. Inhibits CWEA and removes TCA-failure indication.			Barber-pole talkback is displayed.
8FL15	SYSTEM B LGC THRUSTER PAIR CMDS QUAD 3 talkback	Indicates enable or disable status of system B quadrant 3 LGC commands.	RCS SYS B: TEMP/ PRESS DISP-FLAGS (panel 16)	LMP's 28-vdc bus	
	Gray display	Indicates normal LGC command of system B quadrant 3 jet firing.			
	Barber-pole display	Indicates LGC command of system B quadrant 3 jet firing is inhibited.			
	Red display	Indicates system B quadrant 3 TCA failed to fire on LGC command.			

Location/ Ref Des	Name and Position	Function	Circuit Breaker	Power Source	Remarks
Panel 2 (cont)					
8S18	SYSTEM B LGC THRUSTER PAIR CMDS QUAD 4 switch (LM 10 and subq)		N/A	N/A	
	ENABLE	Permits normal LGC command of system B quadrant 4 jet firing.			Gray talkback is displayed.
	DISABLE	Provides signal to LGC to inhibit firing commands to system B quadrant 4 jets. Inhibits CWEA and removes TCA-failure indication.			Barber-pole talkback is displayed.
8FL16	SYSTEM B LGC THRUSTER PAIR CMDS QUAD 4 talkback	Indicates enable or disable status of system B quadrant 4 LGC commands.	RCS SYS B: TEMP/ PRESS DISP-FLAGS (panel 16)	LMP's 28-vdc bus	
	Gray display	Indicates normal LGC command of system B quadrant 4 jet firing.			
	Barber-pole display	Indicates LGC command of system B quadrant 4 jet firing is inhibited.			
	Red display	Indicates system B quadrant 4 TCA failed to fire on LGC command.			

PANEL 2

Location/ Ref Des	Name and Position	Function	Circuit Breaker	Power Source	Remarks
Panel 2 (cont)					
	Barber-pole display	Indicates propellant main shutoff valves are closed.			Both main shutoff valves must be closed to obtain barber-pole display.
8S9	MAIN SOV SYS B switch	Selects inputs to two latching, solenoid-operated, main shutoff valves in propellant lines downstream of propellant tanks.	RCS SYS B: MAIN SOV (panel 16)	LMP's 28-vdc bus	Switch is spring loaded to center (lock) position. These valves are normally open; if system A or B malfunctions, propellant flow to malfunctioning system is interrupted by setting corresponding switch to CLOSE.
	OPEN	Energizes solenoids that drive propellant main shutoff valves to open position.			Gray talkback is displayed when main shutoff valves are open.
	Center	Removes solenoid excitation.			Main shutoff valves remain in last commanded position.
	CLOSE	Energizes solenoids that drive propellant main shutoff valves to closed position.			Barber-pole talkback is displayed when main shutoff valves are closed.
8FL7	MAIN SOV SYS B talkback		RCS SYS B: TEMP/ PRESS DISP-FLAGS (panel 16)	LMP's 28-vdc bus	
	Gray display	Indicates propellant main shutoff valves controlled by SYSTEM B MAIN SOV switch are open.			A gray display can be obtained with only one main shutoff valve open.
	Barber-pole display	Indicates main propellant shutoff valves are closed.			Both main shutoff valves must be closed to obtain a barber-pole display.
1S26	ACA PROP switch	Enables isolation of 28 volts, 800 cps to ACA transducer primary coil.	N/A	N/A	If ACA is disabled, only the landing mission phase is affected.
	ENABLE	Enables normal operation of ACA in proportional rate mode.			

Location/ Ref Des	Name and Position	Function	Circuit Breaker	Power Source	Remarks
Panel 2 (cont)	DISABLE	Disables ACA proportional rate command capability.			
	ENVIRONMENTAL CONTROL				
	TEMP indicator				
7M3B	SUIT °F scale	Displays suit circuit temperature (degrees Fahrenheit) sensed at suit outlet.	ECS: DISP (panel 16)	LMP's 28-vdc bus	
7M3A	CABIN °F scale	Displays cabin interior temperature (degrees Fahrenheit) sensed at cabin fan inlet.			
	PRESS indicator				
7M2B	SUIT PSIA scale	Displays suit circuit pressure (psia) sensed downstream of suit gas supply connectors.	ECS: DISP (panel 16)	LMP's 28-vdc bus	
7M2A	CABIN PSIA scale	Displays cabin interior pressure (psia) sensed by aneroid sensor on cabin pressure sensor switch.			
16DS93	Press indicator power failure indicator	Red light goes on when power to indicator is interrupted.	N/A	N/A	
7M1	PART PRESS CO_2 indicator	Displays partial pressure of carbon dioxide content of gas in ARS.	ECS: DISP (panel 16)	LMP's 28-vdc bus	
	GLYCOL indicator				
7M5B	TEMP scale	Displays glycol temperature (degrees Fahrenheit) in primary coolant loop. However, following failure of primary loop and selection of secondary coolant pump,	ECS: DISP (panel 16)	LMP's 28-vdc bus	

Location/ Ref Des	Name and Position	Function	Circuit Breaker	Power Source	Remarks
Panel 2 (cont)		with GLYCOL selector switch and GLYCOL PUMP SEC circuit breaker, indicator displays secondary coolant loop temperature.			
7M5A	PRESS scale	Displays glycol pump discharge pressure (psia) in primary coolant loop. However, following failure of primary loop and selection of secondary coolant pump with GLYCOL selector switch and GLYCOL PUMP SEC circuit breaker, indicator displays secondary glycol pump discharge pressure.			
16DS95	GLYCOL indicator power failure indicator	Red light goes on when power to indicator is interrupted.	N/A	N/A	
	QUANTITY indicator		ECS: DISP (panel 16)	LMP's 28-vdc bus	
7M4A	O_2 scale	Displays quantity of oxygen (percent) remaining in descent oxygen tank or either ascent oxygen tank, as selected with O_2/H_2O QTY MON switch.			
7M4B	H_2O scale	Displays quantity of water (percent) remaining in descent water tank or either ascent water tank, as selected with O_2/H_2O QTY MON switch.			
16DS94	QUANTITY indicator power failure indicator	Red light goes on when power to indicator is interrupted.	N/A	N/A	

Location/ Ref Des	Name and Position	Function	Circuit Breaker	Power Source	Remarks
Panel 2 (cont)					
9M3	X-Pointer indicator	Displays forward and lateral velocities, lateral velocities only, or rendezvous radar LOS elevation and azimuth angular rates, depending upon setting of RATE/ERR MON switch and MODE SEL switch.	FLT DISP: SE X-PNTR (panel 16)	LMP's 28-vdc bus	Forward and lateral velocities are coincident with LM Z and Y body axis velocities when PGNS drives display. When LR drives display, forward and lateral velocities are coincident with LM Z and Y axis (from hi-gate point to touch-down). When AGS drives display, lateral Y-axis velocity only is displayed. When RR is selected, LOS rates are displayed.
16DS97	X-Pointer indicator power failure indicator	Red light goes on when power to indicator is interrupted.	N/A	N/A	
9M6	Flight director attitude indicator (FDAI)	Displays total vehicle attitudes, attitude rates and attitude errors, or vehicle attitude, attitude rates, and RR shaft and trunnion angles, depending on setting of RATE/ERR MON switch. Setting ATTITUDE MON switch selects PGNS or AGS as source of vehicle total attitude and attitude errors displayed on FDAI. Shaft and trunnion angles are displayed by pitch and yaw error needles, respectively, when RATE/ERR MON switch is set to RNDZ RADAR.	AC BUS B: SE FDAI (panel 11) FLT DISP: EVENT TIMER/ SE FDAI (panel 16)	CDR's 115-vac bus B LMP's 28-vdc bus	Attitude rates displayed are always obtained from CES rate gyro assembly.
6S3	MASTER ALARM pushbutton/light Audible tone	Light flashes when any caution or warning light goes on, except C/W PWR caution and DES QTY warning lights. Initiated in conjunction with MASTER ALARM pushbutton/light and caution/warning array light(s).	LTG: MASTER ALARM (panel 16)	LMP's 28-vdc bus	Pressing Commander's or LM Pilot's pushbutton extinguishes both MASTER ALARM lights and terminates audible tone, but has no effect on caution or warning light(s).

Location/ Ref Des	Name and Position	Function	Circuit Breaker	Power Source	Remarks
Panel 2 (cont)					
9S7	RATE/ERR MON switch	Selects inputs for FDAI and X-pointer indicator.	N/A	N/A	When switch is set to LDG RDR/ CMPTR, data input is dependent upon settings of MODE SEL and ATTITUDE MON switches.
	RNDZ RADAR	Shaft and trunnion angles from the RR are displayed by pitch and yaw error needles of FDAI; LOS azimuth and elevation rates are displayed on X-pointer indicator (illuminating LOS AZ and LOS ELEV).			
	LDG RDR/COMPTR	Vehicle attitude errors (PGNS or AGS as selected with ATTITUDE MON switch), are displayed by FDAI error needles. Forward and lateral velocities from the LR (PGNS or AGS as selected with MODE SEL switch) are displayed on the X-pointer indicator (illuminating LAT VEL and FWD VEL).			AGS provides only lateral velocity data.
9S10	ATTITUDE MON switch	Selects input for FDAI total attitude display and input for attitude error needles during landing.	N/A	N/A	
	PGNS	LM total attitude signals, after conditioning by GASTA, are fed to FDAI ball; LGC attitude error signals are fed to FDAI pitch, roll, and yaw error needles.			
	AGS	AGS LM total attitude signals are fed to FDAI ball; AGS attitude error signals are fed to FDAI pitch, roll, and yaw error needles.			

Location/ Ref Des	Name and Position	Function	Circuit Breaker	Power Source	Remarks
Panel 2 (cont)					
7S3	GLYCOL selector switch	Selects either circulating pump in primary coolant loop or circulating pump in secondary coolant loop.	ECS: GLYCOL PUMP 1 and ECS: GLYCOL PUMP 2 (panel 11)	CDR's 28-vdc bus	Pump failure causes GLYCOL component caution light and ECS caution light to go on.
	PUMP 1	Activates glycol pump No. 1		LMP's 28-vdc bus	GLYCOL component caution light and ECS caution light go off when glycol pump No. 2 is activated.
	PUMP 2	Activates glycol pump No. 2			
	INST (SEC)	Activates glycol instrumentation.	ECS: GLYCOL PUMP SEC (panel 16)		If glycol pump No. 2 fails, both lights will go on. Pressing ECS: GLYCOL PUMP SEC circuit breaker activates secondary glycol pump and extinguishes ECS caution light.
7DS3	GLYCOL component caution light	Goes on to indicate failure of active glycol pump.	ECS: GLYCOL PUMP 1 and GLYCOL PUMP 2 (panel 11)	CDR's 28- vdc bus	Light goes out when pump is reselected and normal pressure is restored.
7S1	SUIT FAN selector switch	Selects suit fan to circulate breathing oxygen in suit circuit.	ECS: SUIT FAN 1 (panel 11)	CDR's 28-vdc bus	Failure of suit fan No. 1 causes SUIT FAN component caution light and ECS caution light to go on. Selection of fan No. 2 and return of normal ΔP across the fans, extinguishes both lights.
	OFF	Shuts off all power to suit fans.			
	1	Selects fan No. 1 for operation.			
	2	Selects fan No. 2 for operation.			
7DS1	SUIT FAN component caution light	Lights to indicate low ΔP across suit fan assembly, due to malfunction of operating suit fan.	ECS: SUIT FAN ΔP (panel 16)	LMP's 28-vdc bus	Light goes off when SUIT FAN switch is set to other fan. However, light goes on if newly selected fan does not develop proper ΔP within approximately 25 seconds, or when failure occurs in selected fan.

Location/ Ref Des	Name and Position	Function	Circuit Breaker	Power Source	Remarks
Panel 2 (cont)					
7DS6	CO_2 component caution light	Goes on to indicate that CO_2 partial pressure in suit circuit exceeds 7.6 mm Hg or if CO_2 CANISTER SEL valve is set to SEC.	ECS: CO_2 SENSOR (panel 16)	LMP's 28-vdc bus	Light goes off when primary canister is replaced with unsaturated canister, CO_2 CANISTER SEL valve is set to PRIM, and CO_2 partial pressure is restored to within-tolerance condition.
7DS7	H_2O SEP component caution light	Goes on to indicate low-speed condition or failure (stoppage) in selected water separator.	ECS: DISP (panel 16)	LMP's 28-vdc bus	Light goes off when other water separator is selected with H_2O SEP SEL valve and water separator comes up to desired speed.
7S2	O_2/H_2O QTY MON selector switch	Selects, for monitoring on QUANTITY indicator, quantities remaining in descent or ascent oxygen and water storage tanks.	N/A	N/A	
	C/W RESET	Routes signal to CWEA to extinguish O_2 QTY caution light, WATER QTY caution light or AGS warning light if on.			
	DES 1	Descent oxygen tank No. 1 pressure is displayed on O_2 QUANTITY indicator and quantity remaining in descent water tank No. 1 is displayed on H_2O QUANTITY indicator.			

PANEL 2

Location/ Ref Des	Name and Position	Function	Circuit Breaker	Power Source	Remarks
Panel 2 (cont)	DES 2	Descent oxygen tank No. 2 pressure is displayed on O_2 QUANTITY indicator and quantity remaining in descent water tank No. 2 is displayed on H_2O QUANTITY indicator.			
	ASC 1	Ascent oxygen tank No. 1 pressure is displayed on O_2 QUANTITY indicator and quantity remaining in ascent water tank No. 1 is displayed on H_2O QUANTITY indicator.			
	ASC 2	Ascent oxygen tank No. 2 pressure is displayed on O_2 QUANTITY indicator and quantity remaining in ascent water tank No. 2 displayed on H_2O QUANTITY indicator.			

Location/ Ref Des	Name and Position	Function	Circuit Breaker	Power Source	Remarks
Panel 3					
1S8	ENG GMBL switch	Enables or disables engine gimbal drive capability.	AC BUS A: DECA GMBL (panel 11)	CDR's 115-vac bus A	Normally set to ENABLE. If ENG GMBL caution light goes on, astronaut must set switch to OFF.
	ENABLE	Gimbal trim signals are enabled to displace descent engine along Y and Z axes.			
	OFF	Power to the GDA's is removed, disabling the gimbal drive capability.			
1S19	DES ENG CMD OVRD switch	Supplies alternate source of 28-vdc to descent engine shut-off valves.	STAB/CONT: ABORT STAGE (panel 11)	CDR's 28-vdc bus	Switch is utilized to keep valves open if DECA power fails.
	ON	Applies 28 vdc to descent engine shut-off valves.			Circuit is completed through normally closed contacts of ABORT STAGE switch.
	OFF	Removes 28 vdc from valves.	STAB/CONT: ABORT STAGE (panel 16)	LMP's 28-vdc bus	
17S5	LDG ANT switch		N/A	N/A	
	AUTO	Enables LGC to position LR antenna as function of mission phase.			
	DES	Drives antenna to first position used before hover point.			Because antenna cannot be driven to its first position by LGC and it is necessary to check out completely two-position capability and provide override of position drive signal if LR antenna interface fails, DES and HOVER positions are used.
	HOVER	Drives antenna to its second position for final landing phase.			

Location/ Ref Des	Name and Position	Function	Circuit Breaker	Power Source	Remarks
Panel 3 (cont)					
17M1	SIGNAL STRENGTH indicator	Displays LR and RR data for test and flight operations, respectively, as selected with TEST/MONITOR switch.	PGNS: SIG STR DISP (panel 11)	CDR's 28-vdc bus	
17DS1	RENDEZVOUS RADAR NO TRACK light	Light goes on to indicate that RR has broken track (data not good) in any one of three tracking modes.	N/A	N/A	
17S6	RADAR TEST switch	Provides testing capability of both radars.	N/A	N/A	
	RNDZ	Initiates test circuitry. RR performance is checked by monitoring SIGNAL STRENGTH indicator after appropriate setting of TEST/ MONITOR switch.			In this test mode, altitude/range meter displays appropriate test value.
	OFF	Disables testing capability.			
	LDG	Initiates test circuitry. LR performance is checked by monitoring SIGNAL STRENGTH indicator after appropriate setting of TEST/ MONITOR switch.			
17S8	TEST/MONITOR selector switch	Selects LR or RR test data or flight performance data for monitoring on SIGNAL STRENGTH indicator.	N/A	N/A	
	ALT XMTR	Provides altitude range transmitter power output for display on SIGNAL STRENGTH indicator during test and flight operations.			
	VEL XMTR	Provides velocity transmitter power output for display on SIGNAL STRENGTH indicator during test and flight operations.			

Location/ Ref Des	Name and Position	Function	Circuit Breaker	Power Source	Remarks
Panel 3 (cont)					
	AGC	Provides AGC during RR testing. Specific value of receiver signal strength should be displayed on SIGNAL STRENGTH indicator; however, during flight operations signal varies.			
	XMTR PWR	Provides specific value of transmitter power output for display on SIGNAL STRENGTH indicator during flight operations.			
	SHAFT ERR	During test, shaft angle error signals are displayed as needle fluctuations with equal amplitude on SIGNAL STRENGTH indicator. During flight operations, these error signals are displayed as needle fluctuations, usually of unequal amplitude, that represent smoothness of servo tracking.			
	TRUN ERR	Same as for SHAFT ERR position, except trunnion angle errors are displayed.			
17S2	SLEW RATE switch	Provides two rates for manually slewing radar antenna with SLEW switch.	N/A	N/A	
	HI	Selects high slew rate for quick coarse adjustments to guide antenna in direction of target.			High slew rate is 7°/sec.
	LO	Selects low slew rate for accurately peaking SIGNAL STRENGTH indicator, enabling subsequent initiation of auto track through rendezvous radar mode selector switch with assurance that main lobe lock will be achieved.			Low slew rate is 1.33°/sec.

Location/ Ref Des	Name and Position	Function	Circuit Breaker	Power Source	Remarks
Panel 3 (cont)					
17S1	SLEW switch	Slews trunnion or shaft servos, or both, positioning RR antenna for manual acquisition of target and subsequent automatic tracking.	N/A	N/A	Two antenna slew rates are available using SLEW RATE switch. Target acquisition is determined from SIGNAL STRENGTH indicator and auto track mode is enabled with rendezvous radar mode selector switch. RR antenna alignment along LM axis can be determined from FDAI pitch and yaw error needles when RATE/ERR MON switch is set to RNDZ RADAR.
	UP	Slews shaft servos to up position, positioning RR antenna for manual acquisition of target and subsequent automatic tracking.			
	RIGHT	Same as for UP position, except that slewing is to right position.			
	DOWN	Same as for UP position, except that slewing is to down position.			
	LEFT	Same as for UP position, except that slewing is to left position.			
17S3	RENDEZVOUS RADAR mode selector switch	Enables control of RR antenna drive.	N/A	N/A	
	AUTO TRACK	Maintains track by comparing received radar signals from three channels; errors are used to drive radar servos.			
	SLEW	Enables manual control of RR antenna drive with SLEW switch.			
	LGC	LGC automatically drives antenna towards target.			Once target is acquired, radar automatically maintains track and NO TRACK light goes off.

Location/ Ref Des	Name and Position	Function	Circuit Breaker	Power Source	Remarks
Panel 3 (cont)					
11S2	DEAD BAND switch				Switch is not functional when PGNS is in use.
	MAX	Provides large-amplitude limit cycle for attitude control system, to conserve RCS fuel during coasting flight.	N/A	N/A	For maximum deadband, which is 5°, FDAI error needle scaling is ±14.4°.
	MIN	Provides narrow deadband for periods during which accurate manual control is required.			During main engine thrusting, minimum deadband is always operating. For minimum deadband, which is 3°, FDAI error needle scaling is ±1.7°.
11S7	GYRO TEST ROLL switch				Switch is associated with GYRO TEST POS RT switch.
	ROLL	Selects FDAI rate gyro to be tested in roll axis.	N/A	N/A	
	PITCH	Selects FDAI rate gyro to be tested in pitch axis.			
	YAW	Selects FDAI rate gyro to be tested in yaw axis.			
11S1	GYRO TEST POS RT switch	Enables test signal to be applied to rate gyro selected with GYRO TEST ROLL switch.	N/A	N/A	
	POS RT	Selected rate gyro output displaces FDAI rate needles and indicates 5°/ second vehicle attitude rate.			
	OFF	No test signal is produced.			
	NEG RT	Produces effects opposite to those of POS RT position.			

Location/ Ref Des	Name and Position	Function	Circuit Breaker	Power Source	Remarks
Panel 3 (cont)					
11S4 11S3 11S5	ATTITUDE CONTROL ROLL, PITCH, and YAW switches	Used in conjunction with MODE CONTROL switches to establish attitude control in roll, pitch, and yaw. Normally these switches are set to MODE CONT while PGNS is in control.	N/A	N/A	
	MODE CONT	Enables use of proportional mode of ACA when MODE control selector switch is set to ATT HOLD and PGNS is controlling. When MODE CONTROL selector switch is set to AUTO, LGC supplies attitude commands to maneuver LM. Under AGS control, function of MODE CONT positions are the same manner as when PGNS is controlling.			
	PULSE	Under PGNS control this position is inoperative. Under AGS control, the PULSE and DIR positions differ only in how RCS thrusters fire. When PULSE is selected, two jets in selected axis fire at constant pulsed rate as long as ACA is displaced more than one-fourth of full throw. PULSE and DIR positions provide open loop acceleration. Rates produced must be nulled to zero by inducing opposite acceleration command. Attitude is not maintained automatically until switch is returned to MODE CONT.			
	DIR	Under PGNS control, when MODE CONTROL selector switch is set to ATT HOLD or AUTO, DIR mode can be used in any axis. Each switch must be set to DIR independently. Displacing ACA one-fourth of full			

Location/ Ref Des	Name and Position	Function	Circuit Breaker	Power Source	Remarks
Panel 3 (cont)		throw causes continuous two-jet firing for selected axes. As in PULSE position, open loop acceleration is provided; it must be nulled in as during pulse operation.			
11S24	PGNS MODE CONTROL switch	Affects outputs of ACA's, TTCA's and LGC.	N/A	N/A	Switch is associated with ATTITUDE CONTROL switches and GUID CONT switch.
	OFF	Establishes the following conditions: (a) Limits operation of the ACA's to the hardover position. (b) Enables two-get direct attitude control in axis, selected with ATTITUDE CONTROL switches. (c) Disables translation outputs of TTCA's and LGC attitude commands.			TTCA throttle commands are not affected. LGC engine-off signals are not enabled; engine must be manually turned off.
	ATT HOLD	In this mode, astronauts can command angular rates proportional to displacement of ACA's. Mode is functional with either PGNS or AGS controlling operation. When ACA is out of detent, ATTITUDE CONTROL switches set to MODE CONT, and LGC not in control, attitude loops are opened and axis transducers are compared to rate gyro outputs to provide proportional commands. While maneuvering, attitude synchronizers follow as attitude changes. If PGNS control is selected, astronauts can command attitude rates proportional to ACA displacement, and attitude is held when ACA is			When ATTITUDE CONTROL switches are set to PULSE or DIR, following attitude command capabilities result: With GUID CONT switch set to PGNS and one or more ATTITUDE CONTROL switches set to PULSE, attitude hold mode is not affected. With GUID CONT switch set to PGNS and one or more ATTITUDE CONTROL switches set to DIR, ACA displacement of one-fourth of full throw causes continuous two-jet firing for selected axes, without rate feedback interfering with LGC command signals.

Location/ Ref Des	Name and Position	Function	Circuit Breaker	Power Source	Remarks
Panel 3 (cont)	AUTO	returned to detent. When a programmed minimum impulse mode command (entered via DSKY) is in effect, moving ACA out of detent in any axis commands a pulse to applicable RCS jets. No attitude or attitude rate stabilization is provided in this mode. When GUID CONT switch is set to PGNS, rate-compensated steering errors are generated by LGC and on-off commands are fed to jet drivers. RCS translation outputs of TTCA's are enabled.			TTCA and ACA hardover outputs are not affected. When one or more ATTITUDE CONTROL switches are set to PULSE or DIR, the following attitude command capabilities and limitations result. With GUID CONT switch set to PGNS and one or more ATTITUDE CONTROL switches set to PULSE, attitude hold mode is not affected. With GUID CONT switch set to PGNS and one or more ATTITUDE CONTROL switches set to DIR, conflicting commands from LGC result when ACA's are displaced one-fourth of full throw.
11S25	AGS MODE CONTROL switch OFF	Affects outputs of ACA's, TTCA's and LGC. Establishes the following conditions: (a) Limits operation of the ACA's to the hardover position. (b) Enables two-jet direct attitude control in axis, selected with ATTITUDE CONTROL switches.	N/A	N/A	Switch is associated with ATTITUDE CONTROL switches and GUID CONT switch. TTCA throttle commands are not affected. AGS engine-off signals are not enabled; engine must be manually turned off.

Location/ Ref Des	Name and Position	Function	Circuit Breaker	Power Source	Remarks
Panel 3 (cont)		(c) Disables translation outputs of TTCA's and LGC attitude commands.			
	ATT HOLD	In this mode, astronauts can command angular rates proportional to displacement of ACA's. Mode is functional with either PGNS or AGS controlling operation. When ACA is out of detent, ATTITUDE CONTROL switches set to MODE CONT, and AGS in control, attitude loops are opened and axis transducers are compared to rate gyro outputs to provide porportional commands. While maneuvering, attitude synchronizers follow as attitude changes.			When ATTITUDE CONTROL switches are set to PULSE or DIR, following attitude command capabilities result: With GUID CONT switch set to AGS, proportional rate commands are disabled for those axes for which PULSE or DIR was selected. With GUID CONT switch set to PGNS and one or more ATTITUDE CONTROL switches set to PULSE, attitude hold mode is not affected. With GUID CONT switch set to PGNS and one or more ATTITUDE CONTROL switches set to DIR, ACA displacement of one-fourth of full throw causes continuous two-jet firing for selected axes, without rate feedback interfering with LGC command signals.
	AUTO	With GUID CONT switch set to AGS, attitude error signals are sent to CES from AGS. In CES, these attitude error signals are passed through limiter, which limits angular rate and combines error signals with rate gyro damping signal. Resultant signals control firing of RCS jets through selectable deadband, logic, pulse modulators, and jet driver amplifiers. Rate commands from ACA remain active in this mode; attitude disturbances occur if ACA is displaced inadvertently.			TTCA and ACA hardover outputs are not affected. When one or more ATTITUDE CONTROL switches are set to PULSE or DIR, the following attitude command capabilities and limitations result. With GUID CONT switch set to AGS, proportional rate commands are disabled for those axes for which PULSE or DIR was selected.

Location/ Ref Des	Name and Position	Function	Circuit Breaker	Power Source	Remarks
Panel 3 (cont)					
	TENS	Slews tens-column digit of MIN columns at rate of two digits per second as long as switch is held in this position.			
	Center	Disables slewing function.			
	UNITS	Slews units-column digit of MIN columns at rate of two digits per second as long as switch is held in this position.			
9S14	EVENT TIMER SLEW CONT SEC switch	Provides slewing function for EVENT TIMER indicator.	FLT DISP: EVENT TIMER/SE FDAI (panel 16)	LMP's 28-vdc bus	Switch is spring loaded to center.
	TENS	Slews tens-column digit of SEC columns at rate of two digits per second as long as switch is held in this position.			
	Center	Disables slewing function.			
	UNITS	Slews units-column digit of SEC columns at rate of two digits per second as long as switch is held in this position.			
11S4 11S5 11S6 11S7	RCS SYS A/B-2 QUAD 1, QUAD 2, QUAD 3, and QUAD 4 heater switches	Control the system 2 heaters (redundant heating system) within applicable quad of RCS TCA's.	HEATERS: RCS SYS A/B-2: QUAD 1 QUAD 2 QUAD 3 QUAD 4 (panel 16)	LMP's 28-vdc bus	Heating system 1 provides continuous automatic control of RCS engine temperatures. This system has no override capability. When QUAD switches are set to AUTO, engine injector temperatures are maintained at approximately 140°F. If temperature of any quad exceeds +190°F or falls below +119°F, HEATER caution light goes on.
	AUTO	Enables automatic temperature control of each engine in a quad.			
	OFF	Interrupts 28-vdc to the heaters.			
	MAN	Bypasses automatic temperature control and continuously maintains 28-vdc on each system 2 heater in a quad.			

Location/ Ref Des	Name and Position	Function	Circuit Breaker	Power Source	Remarks
Panel 3 (cont)					
16S9	SIDE PANELS switch	Permits control of lighting on LM Pilot's side panels, independently of lighting of forward panel.	AC BUS A: INTGL LTG (panel 11)	CDR's 115-vac bus A	
		Enables on/off control of LM Pilot's side panel integral lights.			
	ON	Connects side panel integral lights to INTEGRAL OVERRIDE switch and INTEGRAL control on panel 5.			
	OFF	Disconnects side panel integral lights from INTEGRAL control and INTEGRAL OVERRIDE switch on panel 5.			
16S6	FLOOD OVHD/FWD switch	Energizes crew compartment floodlights.	LTG: FLOOD (panel 16)	LMP's 28-vdc bus	Floodlight power source is independent of that used for integral lighting.
	ALL	Energizes all floodlights.			
	OFF	Deenergizes all floodlights.			
	OVHD/FWD	Energizes two overhead and two forward floodlights.			Overhead floodlights are fitted with rotatable reflectors.
16R4	FLOOD OVHD/FWD control	Controls the brightness of the LM Pilot's overhead and forward floodlights.	LTG: FLOOD (panel 16)	LMP's 28-vdc bus	Control operates only when FLOOD OVHD/FWD switch is set to OVHD/FWD or ALL, and the overhead hatch is closed. If overhead hatch is open, FLOOD OVHD/FWD switch is bypassed and FLOOD OVHD/FWD control enabled.
	DIM to BRIGHT	Controls intensity level of floodlights continuously from dim to bright.			
16S10	LAMP/TONE TEST selector switch	Performs test as indicated below.			
	OFF	All test functions are inactive.			OFF position is at each end of switching sequence to permit setting switch to OFF without recycling through all test positions.

Location/ Ref Des	Name and Position	Function	Circuit Breaker	Power Source	Remarks
Panel 3 (cont)					
	ALARM/TONE	Tests lamps in MASTER ALARM pushbuttons, and tests audible warning tone.	LTG: MASTER ALARM (panel 16)	LMP's 28-vdc bus	
	C/W 1	Tests lamps in first bank of warning lights on panel 1.			
	ENG PB-C/W 2	Tests lamps in engine START and STOP lights and in second bank of warning lights on panel 1.			
	C/W 3	Tests lamps in first bank of caution lights on panel 2.			
	C/W 4	Tests lamps in second bank of caution lights on panel 2.			
	COMPNT	Tests lamps in component caution and lunar contact lights.			
16S17	EXTERIOR LTG switch	Controls docking and tracking lights.	LTG: ANN/ DOCK/ COMPNT (panel 11 and panel 16)	CDR's 28-vdc bus	
	DOCK	Engerizes docking lights.			
	OFF	Deenergizes docking and tracking lights.			
	TRACK	Energizes tracking light to full (100%) brightness.	LTG: TRACK (panel 16)	LMP's 28-vdc bus	
1DS2	LUNAR CONTACT light	Both lights (red) go on when probe(s) on landing gear touches lunar surface, to indicate that descent engine should be turned off.	N/A	N/A	Light goes off when either engine stop switch is pressed.

Location/ Ref Des	Name and Position	Function	Circuit Breaker	Power Source	Remarks
Panel 3 (cont)					
9S18	X-POINTER SCALE switch	Controls scale range of X-pointer indicator.	N/A	N/A	
	HI MULT	When LOS azimuth and elevation rates are displayed, this position provides a scale of ±20 mrad/sec. When horizontal velocities are displayed, this position illuminates the X10 multiplier to provide range of ±200 fps.			
	LO MULT	When LOS azimuth and elevation rates are displayed, this position illuminates the X.1 multiplier to provide a range of ±2 mrad/sec. When horizontal velocities are displayed, this position provides range of ±20 fps.			

Location/ Ref Des	Name and Position	Function	Circuit Breaker	Power Source	Remarks
Panel 4					
1S21 1S23	ACA/4 JET switch (CDR and LMP) ENABLE DISABLE	Enables isolation of 28 volts dc if short occurs in ACA. Enables normal operation of ACA. Disables four-jet direct attitude control function (hardover position) of ACA.	STAB/CONT: ATT DIR CONT (panel 11)	CDR's 28-vdc bus	The nominal position of this switch is ENABLE.
1S20 1S22	TTCA/TRANSL switch (CDR and LMP) ENABLE DISABLE	Enables isolation of 28 volts dc if short occurs in TTCA. Enables normal operation of TTCA. Disables translation control function of TTCA.	STAB/CONT: ATCA (AGS) (panel 16)	LMP's 28-vdc bus	The nominal position of this switch is ENABLE.
		NOTE White condition indicators signify computer status; yellow condition indicators describe various cautions associated with the GN&CS.			
3DS1	UPLINK ACTY condition indicator (white)	Indicates that uplink is being received by LGC.	N/A	N/A	Is energized by first character of digital uplink message received by LGC. If light is not turned off by end of uplink transmission, the astronaut should extinguish light when transmission is complete by pressing RSET pushbutton.
3DS8	TEMP condition indicator (yellow)	Indicates that stable member temperature has exceeded its limits by ±4° F. (Nominal operating temperature +130.3°F).	N/A	N/A	

PANEL 4

Location/ Ref Des	Name and Position	Function	Circuit Breaker	Power Source	Remarks
Panel 4 (cont)					
3DS5	NO ATT condition indicator (white)	Indicates that ISS is not suitable for use as attitude reference.	N/A	N/A	Indicator lamp goes on when LGC is in operate mode and there is no inertial reference, during coarse align, if ISS is off, or IMU is caged.
3DS9	GIMBAL LOCK condition indicator (yellow)	Indicates that middle gimbal has driven through angle greater than +70° or -70° from its zero position.	N/A	N/A	When middle gimbal angle exceeds +85° or -85° from its zero position, LGC automatically commands coarse align mode in ISS to prevent gimbal oscillation. NO ATT condition indicator goes on.
3DS6	STBY condition indicator (white)	Indicates that LGC is in standby condition.	N/A	N/A	Indicator lamp is deenergized if LGC is in operate mode.
3DS10	PROG condition indicator (yellow)	Indicates that program check has failed.	N/A	N/A	Indicator is controlled by computer program.
3DS7	KEY REL condition indicator (white)	Indicates that internal program has attempted to use DSKY and found it busy due to independent operator action.	N/A	N/A	Indicator is modulated by flash signal.
3DS11	RESTART condition indicator (yellow)	Indicates one or more of the following abnormal operations: Word has been transferred incorrectly from memory-parity fail. LGC is in endless control loop-TC trap. LGC has been interrupted for 30 msec - RUPT lock. Alarm has been generated by program control. LGC fails to process new job within a period from .64 to 1.92 seconds.	N/A	N/A	

Location/ Ref Des	Name and Position	Function	Circuit Breaker	Power Source	Remarks
Panel 4 (cont)					
3DS14	OPR ERR condition indicator (white)	Indicates that astronaut has performed an improper sequence on the DSKY.	N/A	N/A	Goes out when RSET pushbutton is pressed.
3DS12	TRACKER condition indicator (yellow)	Indicates RR CDU failure or improper data from RR or LR.	N/A	N/A	When RR or LR are on, indicator lamp is energized if: RR CDU fine error greater than 1.0 vrms occurs RR CDU coarse error greater than 2.5 vrms occurs RR read counter limit cycles at rate greater than 160 cps RR CDU analog-to-digital conversion fails RR CDU +14-vdc supply decreases to 50% of nominal RR data-not-good discrete occurs during LGC data read sequence LR altitude data-not-good discrete or LR velocity data-not-good discrete occurs during LGC data read sequence.
3DS209	ALT light (yellow)	Indicates altitude data-good signal from LR is absent during Landing Radar Data Read Routine.	N/A	N/A	A flashing light indicates that LGC received data-good signal, but data does not pass LGC Reasonableness Test.
3DS204	VEL light (yellow)	Indicates velocity data-good signal from LR is absent during Landing Radar Data Read Routine.	N/A	N/A	

PANEL 4

Location/ Ref Des	Name and Position	Function	Circuit Breaker	Power Source	Remarks
Panel 4 (cont)					
3DS15	COMPTR ACTY condition indicator (white)	Indicates that LGC is in program other than dummy job (LGC is processing data.)	N/A	N/A	
3M1	PROG display indicator	Indicates the program that is being processed LGC.	N/A	N/A	
3M2	VERB display indicator	Indicates verb code entered at keyboard or commanded by LGC.	N/A	N/A	
3M3	NOUN display indicator	Indicates noun code entered at keyboard or commanded by LGC.	N/A	N/A	
3M4 3M5 3M6	Data display registers	Indicate numerical data entered at keyboard or commanded by LGC. Sign is associated only with decimal data.	N/A	N/A	The three data display registers are designated R1, R2, R3 from top to bottom of DSKY.
3S3	VERB pushbutton (momentary)	Conditions LGC to interpret next two numerical characters as verb code and extinguishes verb numerical display.	N/A	N/A	
3S4	NOUN pushbutton (momentary)	Conditions LGC to interpret next two numerical characters as noun code and extinguishes noun numerical display.	N/A	N/A	
3S5	CLR pushbutton (momentary)	Used during data loading to blank data register being used; loading can then be resumed.	N/A	N/A	First component load verbs are cleared by pressing CLR pushbutton once. Second and third component load verbs are cleared by pressing the pushbutton twice or three times, as required. The data registers clear in R3, R2, R1 order. Refer to paragraph 2.2.3.1.3.

Location/ Ref Des	Name and Position	Function	Circuit Breaker	Power Source	Remarks
Panel 4 (cont)					
3S6	PRO pushbutton (momentary)	Commands LGC to proceed without data. Also commands LGC to enter standby mode if pressed when program P06 is in progress.	N/A	N/A	
3S7	KEY REL pushbutton (momentary)	Releases DSKY to LGC for use with internal sequences.	N/A	N/A	Operator should release DSKY by pressing pushbutton when he is temporarily finished with DSKY.
3S8	ENTR pushbutton (momentary)	Informs LGC that assembled data are complete and that requested function is to be executed. Used in two ways: to execute the VERB/ NOUN code appearing on the VERB and NOUN display and to accept data just loaded and appearing in data display registers (R1, R2, R3).	N/A	N/A	
3S9	RSET pushbutton (momentary)	Turns off DSKY condition indicator after condition has been corrected.	N/A	N/A	
3S10 thru 3S19	0 through 9 pushbuttons (momentary)	Enter numerical data, noun codes, and verb codes into DSKY displays.	N/A	N/A	
3S21 3S20	+ and - pushbutton (momentary)	Inform LGC that following numerical data are decimal and indicate sign of data.	N/A	N/A	
3DS	PR10 DISP light	Indicates that system has a priority display to bring to the attention of the astronaut.	N/A	N/A	
3DS	NO DAP light	Indicates that the DAP is not con- controlling vehicle attitude.	N/A	N/A	

Location/ Ref Des	Name and Position	Function	Circuit Breaker	Power Source	Remarks
Panel 5					
1S5	DES RATE switch +1 FPS center - 1 FPS	Permits establishing LM rate of descent under PGNS control in fixed increments. Each switch actuation provides a discrete pulse, changing the rate of descent by 1 fps.	N/A	N/A	Response to switch commands is monitored on the altitude rate scale of the Range/Range Rate; Alt/Alt Rate indicator. Plus sign denotes increase in engine thrust. Minus sign denotes decrease in engine thrust.
1S3	Engine stop pushbutton	Provides discrete stop signals to descent and ascent engines, independent of setting of ENG ARM switch, except when in abort sequence.	STAB/CONT: ENG ARM (panel 16)	LMP's 28-vdc bus	When pressed, pushbutton remains pressed and illuminated (red). It is reset by pressing it again.
1S2	Engine START pushbutton	Permits immediate manual firing of descent or ascent engine, depending upon setting of ENG ARM switch.	STAB/CONT: ENG START OVRD (panel 11)	CDR's 28-vdc bus	When pressed, pushbutton remains pressed and illuminated (red). Actuation of either engine stop pushbutton interrupts override function, the engine stops, and the START pushbutton light goes out.
1S12	+X TRANSL pushbutton (momentary)	When held pressed, switch provides four-jet translation in +X-direction by energizing RCS direct (secondary) coils. Upon release of pushbutton, signal is removed from coils, terminating jet firings.	STAB/CONT: ATT DIR CONT (panel 11)	CDR's 28-vdc bus	If switch fails closed, circuit breaker must be opened. The secondary coils of the RCS engines will be disabled, resulting in loss of hardover and direct modes.
	MISSION TIMER:		FLIGHT DISPLAYS: MISSION TIMER (panel 11)	CDR's 28-vdc bus	
9S19	TIMER CONT switch	Provides discrete signals to MISSION TIMER indicator.			
AA	START	Enables indicator to count upward from number preset with SLEW CONT switches.			

PANEL 5

Location/ Ref Des	Name and Position	Function	Circuit Breaker	Power Source	Remarks
Panel 5 (cont)					
	STOP	Stops and holds indicator count until START or RESET is selected.			
	RESET	Resets indicator to zero.			
9S22	SLEW CONT HOURS switch	Provides slewing function for HOURS columns of MISSION TIMER indicator.	FLIGHT DISPLAYS: MISSION TIMER (panel 11)	CDR's 28-vdc bus	
	TENS	Slews tens-column digit of HOURS columns at rate of two digits per second as long as switch is held in this position.			Hundreds-column digit of HOURS columns is also controlled by the tens position, at rate of one digit per 5 seconds.
	Center	Disables slewing function.			All digits change in increasing direction.
	UNITS	Slews units-column digit of HOURS columns at rate of two digits per second as long as switch is held in this position.			
9S21	SLEW CONT MIN switch	Provides slewing function for MIN columns of MISSION TIMER indicator.	FLIGHT DISPLAYS: MISSION TIMER (panel 11)	CDR's 28-vdc bus	All digits change in increasing direction.
	TENS	Slews tens-column digit of MIN columns at rate of two digits per second as long as switch is held in this position.			
	Center	Disables slewing function.			
	UNITS	Slews units-column digit of MIN columns at rate of two digits per second as long as switch is held in this position.			

Location/ Ref Des	Name and Position	Function	Circuit Breaker	Power Source	Remarks
Panel 5 (cont)					
9S20	SLEW CONT SEC switch	Selects inputs to MISSION TIMER indicator.	FLIGHT DISPLAYS: MISSION TIMER (panel 11)	CDR's 28-vdc bus	
	TENS	Slews tens-column digit of SEC columns at rate of two digits per second as long as switch is held in this position.			
	Center	Disables slewing function.			
	UNITS	Slew units-column digit of SEC columns at rate of two digits per second as long as switch is held in this position.			
16S4	OVERRIDE ANUN switch	Provides full voltage bypass of C/W array and component caution light portion of ANUN/NUM control.	N/A	N/A	
	ON	Bypasses ANUN/NUM control and applies 5 volts dc directly to annunciators of C/W array, to component caution lights, and to incandescent illuminated pushbuttons.			
	OFF	C/W array and component caution lights are controlled with ANUN/NUM control.			
16S5	OVERRIDE NUM switch	Provides full voltage override of brightness control of numeric portion of ANUN/NUM control.	AC BUS B: NUM LTG: (panel 11)	CDR's 115-vac bus	
	ON	Supplies full power (115 volts ac) directly to integrally illuminated EL numerics and time-shared displays.			Portion of autotransformer associated with numeric readouts is disconnected from circuit.
	OFF	Disconnects full power; EL numeric readouts are controlled with ANUN/NUM control.			

Location/ Ref Des	Name and Position	Function	Circuit Breaker	Power Source	Remarks
Panel 5 (cont)					
16S3	OVERRIDE INTEGRAL switch	Supplies full voltage to low-level integrally illuminated EL markings and displays.	AC BUS A: INTGL LTG: (panel 11)	CDR's 115-vac bus	Full voltage is 115 volts ac, 400 cps.
	ON	Disconnects INTEGRAL control from power circuit and applies 115 volts ac directly to EL markings and displays.			
	OFF	Disconnects 115-volt a-c power. Low-level integrally illuminated EL markings and displays are controlled with INTEGRAL control.			
16S1	SIDE PANELS switch	Permits control of EL lighting on Commander's side panels, independently of lighting of forward panel.	AC BUS A: INTGL LTG: (panel 11)	CDR's 115-vac bus	
	ON	Permits regulation of side panel EL lighting with INTEGRAL control and OVERRIDE INTEGRAL switch.			
	OFF	Disconnects INTEGRAL control, and OVERRIDE INTEGRAL switch from their respective circuits.			
16R1	FLOOD OVHD/FWD control	Controls the brightness of the Commander's overhead and forward floodlights.	LTG:FLOOD (panel 16)	LMP's 28-vdc bus	Control operates only when FLOOD OVHD/FWD switch (panel 3) is set to OVHD/FWD or ALL, and the overhead hatch is closed. If overhead hatch is open, FLOOD OVDH/FWD switch is bypassed and FLOOD OVHD/FWD control enabled.
	DIM to BRIGHT	Controls intensity level of floodfights continuously from dim to bright.			

Location/ Ref Des	Name and Position	Function	Circuit Breaker	Power Source	Remarks
Panel 5 (cont)					
16R2	ANUN/NUM control	Regulates brightness of all annunciators except C/W PWR in C/W array, component caution lights, EL numeric readouts, incandescent illuminated pushbuttons, and time-shared displays (temporary).	LTG:NUM (panel 11)	CDR's 115-vac bus	If either portion of ANUN/NUM control fails, separate override switch provides maximum voltage for annunciators and component caution lights (ANUN OVERRIDE switch) and for EL numeric readouts (NUM OVERRIDE switch). Maximum voltage supplied on BRIGHT position: 5 volts dc for annunciators and component caution lights; 115 volts ac for numeric readouts.
16R3	INTEGRAL control	Regulates brightness of low-level integrally illuminated EL markings and displays from DIM to BRIGHT.	LTG: INTGL (panel 11)	CDR's 115-vac bus	If control fails or brightness range is inadequate, control may be bypassed with INTEGRAL OVERRIDE switch.

Location/ Ref Des	Name and Position	Function	Circuit Breaker	Power Source	Remarks
Panel 6					
1S4	Engine stop pushbutton	Provides discrete stop signals to descent and ascent engines, independent of setting of ENG ARM switch, except when in abort sequence.	STAB/CONT: ENG ARM (panel 16)	LMP's 28-vdc bus	Pushbutton is pressed on lunar landing, after LUNAR CONTACT lights go on. When pressed, pushbutton remains pressed and illuminated red. It is reset by pressing it again.
12S17	AGS STATUS switch	Enables astronauts to place AGS in any one of three states.	STAB/CONT: AEA (panel 16)	LMP's 28-vdc bus	
	OFF	No power is supplied to AGS. Supplies power to ASA heaters.	STAB/CONT: ASA (panel 16)		
	STANDBY	Applies full power to entire ASA and then places AEA in warmup mode.			
	OPERATE	Applies full power to ASA and AEA.			
12DS1	OPR ERR condition indicator (white)	Goes on if astronaut presses incorrect number of pushbuttons for operation being performed, if + or - keys are not pressed first in entering data, and if "8" or "9" is used in entering address (which is limited to octal digits).	N/A	N/A	If too few pushbuttons are pressed, indicator goes on after ENTR or READOUT pushbutton is pressed. If too many pushbuttons are pressed, indicator goes on before ENTR or READOUT pushbutton is pressed. Indicator goes off when CLR pushbutton is pressed.
12M1	Address indicator	Displays digits that identify AEA computer address selected by astronaut via keyboard.	N/A	N/A	Three octal digits must be set on this indicator, using keyboard, before each DEDA operation.
12M2	Data indicator	Displays data to be entered into AEA computer address displayed on address indicator. Displays data selected for readout from AEA computer location identified on address indicator, if READOUT pushbutton is pressed.	N/A	N/A	Five-digit numeric indicator and + and - indicator. Data to be entered are selected by astronaut via keyboard. Updating rate of any changing data selected for readout is limited to two times per second.

PANEL 6

Location/ Ref Des	Name and Position	Function	Circuit Breaker	Power Source	Remarks
Panel 6 (cont)					
12S1 thru 12S12	Keyboard pushbuttons	Enable astronauts to load shift register with necessary values (0 through 9) and signs (+ and -) to be transferred to AEA.	STAB/CONT: AEA (Panel 16)	LMP's 28-vdc bus	Pressing pushbuttons successively fills address and data indicators in order, from left to right.
		NOTE If the CLR, ENTR, or READOUT pushbuttons are not fully depressed, either the OPR ERR light will illuminate or the DEDA will not operate.			
12S13	CLR pushbutton (momentary)	Erases all numerals displayed on address and data indicators and cancels effect of HOLD switch.	N/A	N/A	When pressed, switch extinguishes OPR ERR indicator lamp.
12S15	READOUT pushbutton (momentary)	Enables astronauts to call up AEA computer data from address set up on address indicator, for display on data indicator.	N/A	N/A	
12S14	ENTR pushbutton (momentary)	Enables astronauts to enter data (set up on data indicator) into AEA computer at address set up on address indicator.	N/A	N/A	Address and data indicators are cleared for immediate reuse when AEA computer has accepted data.
12S16	HOLD pushbutton (momentary)	Enables astronauts to interrupt updating of any continuously changing data displayed on data indicator.	N/A	N/A	Information displayed on data indicator remains unchanged until pushbutton is pressed again, enabling display of present value of data and continuance of updating.

Location/ Ref Des	Name and Position	Function	Circuit Breaker	Power Source	Remarks
Panel 8					
10S9	DES PROPULSION FUEL VENT switch	Enables venting of descent fuel and helium pressurization section.	PROPUL: DES He REG-VENT (panel 11)	CDR's 28-vdc bus	Provides for planned venting of descent propulsion section after final use of descent engine. Used with DES VENT switch.
	OPEN	Energizes fuel vent valve to open position.			
	Center	Fuel vent valve remains in last selected position.			
	CLOSE	Energizes fuel vent valve to closed position.			
10FL5	DES PROPULSION FUEL VENT talkback	Indicates position of descent fuel vent valve.	N/A		
	Gray display	Indicates fuel vent valve is latched open.			
	Barber-pole display	Indicates fuel vent valve is latched closed.			

Location/ Ref Des	Name and Position	Function	Circuit Breaker	Power Source	Remarks
Panel 8 (cont)					
10S10	DES PROPULSION OXID VENT switch	Enables venting of descent oxidizer and helium pressurization section.	PROPUL: DES He REG-VENT (panel 11)	CDR's 28-vdc bus	Provides for planned venting of descent propulsion section after final use of descent engine. Used with DES VENT switch.
	OPEN	Energizes oxidizer vent valve to open position.			
	Center	Oxidizer vent valve remains in last selected position.			
	CLOSE	Energizes oxidizer vent valve to closed position.			
16S22	HTR CONT MESA switch	Selects heater power for MESA temperature control.	HEATERS: MESA (panel 16)	LMP's 28-vdc bus	MESA temperature is monitored by PCM telemetry.
	HI	Provides MESA with 150 watts (maximum) of heater power.			
	LO	Provides MESA with 50 watts (maximum) of heater power.			
16S21	HTR CONT URINE LINE switch	Selects either of two 15-watt sources of heater power for waste management system during translunar coast and lunar stay.	HEATERS: URINE LINE (panel 11)	CDR's 28-vdc bus	
	HTR 1	Enables operation of heater No. 1.			
	OFF	Disables operation of both heater No. 1 and 2			
	HTR 2	Enables operation of heater No. 2 (backup).			

Location/ Ref Des	Name and Position	Function	Circuit Breaker	Power Source	Remarks
Panel 8 (cont)					
10FL6	DES PROPULSION OXID VENT talkback	Indicates position of descent oxidizer vent valve.	N/A		
	Gray display	Indicates oxidizer vent valve is latched open.			
	Barber-pole display	Indicates oxidizer vent valve is latched closed.			
2S9	DES PRPLNT ISOL VLV switch		ED: LOGIC PWR A (panel 11)	CDR's 28-vdc bus	Switch is locked in, and spring loaded to, SAFE position.
	FIRE	Actuates descent fuel and oxidizer compatibility explosive valves to permit ambient helium to pressurize fuel and oxidizer tanks.	ED: LOGIC PWR B (panel 16)	LMP's 28-vdc bus	
	SAFE	Removes power from descent fuel and oxidizer compatibility valves.			
2S7	MASTER ARM switch		ED: LOGIC PWR A (panel 11)	CDR's 28-vdc bus	Switch is locked in both positions.
	ON	Enables actuation of all LM explosive devices by actuating redundant relays that route power to EDS buses.	ED: LOGIC PWR B (panel 16)	LMP's 28-vdc bus	
	OFF	Removes all power from relays.			
2S6	DES VENT switch	Actuates descent fuel and oxidizer vent explosive valves to enable descent propulsion section venting.	ED: LOGIC PWR A (panel 11)	CDR's 28-vdc bus	Switch is locked in, and spring loaded to, SAFE position. Used with DES PROPULSION FUEL and OXIDIZER VENT switches.
	FIRE	Actuates explosive valves.	ED: LOGIC PWR B (panel 16)	LMP's 28-vdc bus	
	SAFE	Removes power from explosive valves.			

Location/ Ref Des	Name and Position	Function	Circuit Breaker	Power Source	Remarks
Panel 8 (cont)					
2S3	ASC He SEL switch	Permits isolation of defective helium tank before initial ascent engine operation.	ED: LOGIC PWR A (panel 11)	CDR's 28-vdc bus	Switch is locked in all positions.
	TANK 1	Selects isolation valve of ascent helium tank No. 1 for firing.	ED: LOGIC PWR B (panel 16)	LMP's 28-vdc bus	
	BOTH	Selects isolation valves of both ascent helium tanks for firing.			
	TANK 2	Selects isolation valve of ascent helium tank No. 2 for firing.			
2S10	LDG GEAR DEPLOY switch		ED: LOGIC PWR A (panel 11)	CDR's 28-vdc bus	Switch is locked in, and spring-loaded to, SAFE position. When all four landing gear assemblies are deployed, positive feedback of landing gear deployment is provided by LDG GEAR DEPLOY talkback.
	FIRE	Actuates explosive devices that release stowed landing gear.	ED: LOGIC PWR B (panel 16)	LMP's 28-vdc bus	
	SAFE	Removes power from landing gear explosive devices.			
2FL1	LDG GEAR DEPLOY talkback		ED: LDG GEAR FLAG (panel 11)	CDR's 28-vdc bus	All four landing gear assemblies must deploy to generate this telemetry code.
	Gray display	Indicates landing gear assemblies are deployed.			
	Barber-pole display	Indicates landing gear assemblies are stowed.			
2S2	He PRESS RCS switch		ED: LOGIC PWR A (panel 11)	CDR's 28-vdc bus	Switch is locked and spring-loaded to SAFE position.
	FIRE	Actuates helium isolation explosive valves that permit helium flow from RCS helium tanks to pressurize propellant tanks.	ED: LOGIC PWR B (panel 16)	LMP's 28-vdc bus	Positive indication of helium isolation valves actuation is provided by RCS PRESS indicator (panel 2).
	SAFE	Removes power from valves.			

Location/ Ref Des	Name and Position	Function	Circuit Breaker	Power Source	Remarks
Panel 8 (cont)					
2S1	He PRESS DES START switch		ED: LOGIC PWR A (panel 11)	CDR's 28-vdc bus	Switch is locked in, and spring-loaded to, SAFE position.
	FIRE	Fires ambient helium explosive isolation valve that permits helium from descent ambient helium tank to prepressurize descent propulsion section.	ED: LOGIC PWR B (panel 16)	LMP's 28-vdc bus	
	SAFE	Removes power from valve.			
2S4	He PRESS ASCENT switch		ED: LOGIC PWR A (panel 11)	CDR's 28-vdc bus	Switch is locked in, and spring-loaded, to SAFE position.
	FIRE	Fires explosive isolation valve of ascent helium tank or tanks selected with ASC He SEL switch and fuel and oxidizer compatibility valves to pressurize ascent propulsion section.	ED: LOGIC PWR B (panel 16)	LMP's 28-vdc bus	Positive indication of isolation valves firing is provided by MAIN PROPULSION PRESS indicator (FUEL and OXID scales).
	SAFE	Removes power from valves.			
2S5	STAGE switch		ED: LOGIC PWR A (panel 11)	CDR's 28-vdc bus	Switch is locked in, and spring-loaded to, SAFE position.
	FIRE	Actuates explosive devices that separate descent and ascent stages.	ED: LOGIC PWR B (panel 16)	LMP's 28-vdc bus	Switch is used only when staging is desired without firing ascent engine.
	SAFE	Removes power from explosive devices.			
2DS1	STAGE SEQ RELAYS SYS A component caution light	Indicates that EDS bus A is armed.	ED: LDG GEAR FLAG (panel 11)	CDR's 28-vdc bus	Light goes on after MASTER ARM switch is set to ON. If light goes on before MASTER ARM switch is set to ON, ED RELAYS caution light also goes on.

Location/ Ref Des	Name and Position	Function	Circuit Breaker	Power Source	Remarks
Panel 8 (cont)					
2DS2	STAGE SEQ RELAYS SYS B component caution light	Indicates that EDS bus B is armed.	ED: LDG GEAR FLAG (panel 11)	CDR's 28-vdc bus	Light goes on after MASTER ARM switch is set to ON. If light goes on before MASTER ARM switch is set to ON, ED RELAYS caution light also goes on.
2S8	STAGE RELAY switch		ED: LOGIC PWR A (panel 11)	CDR's 28-vdc bus	If staging relays (K2) trip before MASTER ARM switch is set to ON, STAGE SEQ RELAYS SYS A and SYS B component caution lights go on. Setting STAGE RELAY switch to RESET, resets staging relays (K2) and extinguishes the component caution lights.
	RESET	Energizes reset coil of staging relays (K2)			
	OFF	Deenergizes reset coil of staging relays (K2)	ED: LOGIC PWR B (panel 16)	LMP's 28-vdc bus	
15AS1	S-BAND T/R switch		N/A	CDR's audio center	
	S-BAND T/R	Enables routing received S-band audio to headset amplifier, and microphone amplifier outputs to PMP for S-band transmission.			
	OFF	Inhibits routing of S-band transmitter and receiver outputs through CDR's audio control center.			
	S-BAND RCV	Enables routing received S-band audio to headset amplifier.			
15AR14	S-band VOLUME thumbwheel	Permits continuous adjustment level of received S-band audio fed to headset amplifier.	N/A	CDR's audio center	

PANEL 8

Location/ Ref Des	Name and Position	Function	Circuit Breaker	Power Source	Remarks
Panel 8 (cont)					
15AS3	ICS T/R switch		N/A	CDR's audio center	
	ICS T/R	Enables routing microphone amplifier outputs to LMP's headset amplifier through intercom bus and audio from intercom bus to CDR's headset.			
	OFF	Inhibits intercom capability.			
	ICS RCV	Enables routing audio from intercom bus to CDR's headset.			
15AR7	ICS VOLUME thumbwheel	Permits continuous adjustment of level of audio fed from intercom bus to headset amplifier.	N/A	CDR's audio center	
15AS4	RELAY ON switch		N/A	Premodulation processor	
	RELAY ON	Enables voice conference capability with CSM and MSFN. Received VHF from CSM may be routed to MSFN via S-band transmitter.			LMP's and CDR's relay switches should not be set to RELAY ON simultaneously.
	RELAY OFF	Inhibits conference capability.			Appropriate Communication Subsystem switches are used to establish the desired relay mode.
15AS6	MODE switch		N/A	CDR's audio center	
	VOX	Enables VOX control circuit in CDR's audio center to key intercom and selected transmitter(s).			
	ICS/PTT	Enables VOX control circuit in CDR's audio center to key intercom.			Selected transmitters are keyed only with push-to-talk (PTT) switches.
	PTT	Disables VOX control circuit in CDR's audio center.			All keying is accomplished with PTT switches.

Location/ Ref Des	Name and Position	Function	Circuit Breaker	Power Source	Remarks
Panel 8 (cont)					
15AR8	VOX SENS thumbwheel	Permits continuous adjustment of VOX sensitivity circuit threshold.	N/A	CDR's audio center	
15AS5	AUDIO CONT switch				
	NORM	Selects CDR's audio center and microphone circuit.	COMM: CDR AUDIO	CDR's 28-vdc bus	
	BU	Selects LMP's audio center and microphone circuit for use by Commander.	COMM: LMP AUDIO	LMP's 28-vdc bus	
15AS2	VHF A switch		N/A	CDR's audio center	
	T/R	Enables routing received VHF A audio to headset amplifier, and microphone amplifier outputs to VHF A transmitter for transmission. VOX keying voltage is routed to VHF A transmitter.			
	OFF	Inhibits routing VHF A transmitter and receiver outputs through Commander's audio center.			
	RCV	Enables routing received VHF A audio to headset amplifier.			
15AR12	VHF A VOLUME thumbwheel	Permits continuous adjustment of level of received VHF audio (channel A) fed to headset amplifier.	N/A	CDR's audio center	
15AS9	VHF B switch		N/A	CDR's audio center	
	T/R	Enables routing received VHF B audio to headset amplifier, and microphone amplifier outputs to VHF			

Location/ Ref Des	Name and Position	Function	Circuit Breaker	Power Source	Remarks
Panel 8 (cont)					
		B transmitter for transmission. VOX keying voltage is routed to VHF B transmitter.			
	OFF	Inhibits routing VHF B transmitter and receiver outputs through CDR's audio center.			
	RCV	Enables routing received VHF B audio to headset amplifier.			
15AR13	VHF B VOLUME thumbwheel	Permits continuous adjustment of level of received VHF audio (channel B) fed to headset amplifier.	N/A	CDR's audio center	
15AR15	MASTER VOL thumbwheel	Permits continuous, simultaneous adjustment of all audio output levels from headset amplifier.	N/A	CDR's audio center	
16S14	COAS switch	Energizes COAS connectors in docking windows.	FLIGHT DISPLAYS: COAS (panel 11)	CDR's 28-vdc bus	
	OVHD	Applies 28 volts dc to overhead docking window COAS connector.			
	OFF	Removes power from docking window COAS connectors.			
	FWD	Applies 28 volts dc to forward docking window COAS connector.			

Location/ Ref Des	Name and Position	Function	Circuit Breaker	Power Source	Remarks
Panel 11					
	AC BUS B circuit breakers				
4CB152	SE WIND HTR (2 amperes)	Applies a-c power to LMP's window heater.	N/A	115-vac bus B	
4CB169	He/PQGS PROPUL DISP (2 amperes)	Applies a-c power to HELIUM indicator and to OXIDIZER and FUEL QUANTITY indicators.	N/A	115-vac bus B	
4CB34	S-BD ANT (2 amperes)	Applies a-c power to S-band steerable antenna electronics assembly.	N/A	115-vac bus B	
4CB226	ORDEAL (2 amperes)	Applies a-c power to earth- or lunar-stay resolvers through EARTH-LUNAR switch.	N/A	115-vac bus B	
4CB203	AGS (2 amperes)	Applies a-c power to AEA outputs to FDAI.	N/A	115-vac bus B	
4CB214	AOT LAMP (2 amperes)	Applies a-c power to AOT lamp.	N/A	115-vac bus B	On-off control for AOT lamp.
4CB210	SE FDAI (2 amperes)	Applies a-c power to LMP's FDAI.	N/A	115-vac bus B	
4CB200	NUM LTG (2 amperes)	Applies a-c power to all numeric (digital displays) DSKY displays, RCS oxidizer and fuel displays, event and mission timers, MPS oxidizer and fuel displays, DEDA address and data displays.	N/A	115-vac bus B	
4CB186	BUS TIE INV 2 (5 amperes)	Connects inverter No. 2 to a-c bus B through INVERTER switch.	N/A	115-vac bus B	

Location/ Ref Des	Name and Position	Function	Circuit Breaker	Power Source	Remarks
Panel 11 (cont)					
4CB185	BUS TIE INV 1 (5 amperes)	Connects inverter No. 1 to a-c bus B through INVERTER switch.	N/A	115-vac bus B	
	AC BUS A circuit breakers				
4CB24	BUS TIE INV 2 (5 amperes)	Connects inverter No. 2 to a-c bus A through INVERTER switch.	N/A	115-vac bus A	
4CB23	BUS TIE INV 1 (5 amperes)	Connects inverter No. 1 to a-c bus A through INVERTER switch.	N/A	115-vac bus A	
4CB27	AC BUS VOLT (2 amperes)	Provides a-c bus voltage and frequency characteristics to IS for display and telemetry purposes.	N/A	115-vac bus A	
4CB144	CDR WIND HTR (2 amperes)	Applies a-c power to CDR's window heater.	N/A	115-vac bus A	
4CB202	TAPE RCDR (2 amperes)	Applies a-c power to DSEA tape drive motors.	N/A	115-vac bus A	
4CB212	AOT LAMP (2 amperes)	Applies a-c power to AOT lamp.	N/A	115-vac bus A	On-off control for AOT lamp.
4CB206	RNDZ RDR (2 amperes)	Applies a-c power to RR power supply.	N/A	115-vac bus A	
4CB207	DECA GMBL (2 amperes)	Applies a-c power to GDA's within DECA.	N/A	115-vac bus A	
4CB211	INTGL LTG (2 amperes)	Applies a-c power to low-level integral lighting; e.g., talkbacks, indicators, and displays.	N/A	115-vac bus A	

Location/ Ref Des	Name and Position	Function	Circuit Breaker	Power Source	Remarks
Panel 11 (cont)					
4CB204	RNG/RNG RT; ALT/ALT RT (2 amperes)	Applies a-c power to range/altitude indicator.	N/A	115-vac bus A	
4CB201	GASTA (2 amperes)	Applies a-c power to GASTA.	N/A	115-vac bus A	
4CB209	CDR FDAI (2 amperes)	Applies a-c power to CDR's FDAI.	N/A	115-vac bus A	
	RCS SYS A circuit breakers				
4CB72	MAIN SOV (5 amperes)	Applies d-c power to RCS system A main oxidizer and fuel shutoff valves through SYSTEM A MAIN SOV switch.	N/A	CDR's 28-vdc bus	Main shutoff valves control propellant flow between RCS tanks and RCS TCA's.
4CB60	QUAD 4 TCA (10 amperes)	Applies d-c power to primary coils of oxidizer and fuel valves of RCS system A, quad 4 TCA's.	N/A	CDR's 28-vdc bus	TCA secondary coil power is applied when ACA is pushed to hard stop or when +X TRANSL pushbutton is pressed.
4CB61	QUAD 3 TCA (10 amperes)	Applies d-c power to primary coils of oxidizer and fuel valves of RCS system A, quad 3 TCA's.	N/A	CDR's 28-vdc bus	TCA secondary coil power is applied when ACA is pushed to hard stop or when +X TRANSL pushbutton is pressed.
4CB62	QUAD 2 TCA (10 amperes)	Applies d-c power to primary coils of oxidizer and fuel valves of RCS system A, quad 2 TCA's.	N/A	CDR's 28-vdc bus	TCA secondary coil power is applied when ACA is pushed to hard stop or when +X TRANSL pushbutton is pressed.
4CB63	QUAD 1 TCA (10 amperes)	Applies d-c power to primary coils of oxidizer and fuel valves of RCS system A, quad 1 TCA's.	N/A	CDR's 28-vdc bus	TCA secondary coil power is applied when ACA is pushed to hard stop or when +X TRANSL pushbutton is pressed.

Location/ Ref Des	Name and Position	Function	Circuit Breaker	Power Source	Remarks
Panel 11 (cont)					
4CB67	ISOL VLV (5 amperes)	Applies d-c power to RCS system A oxidizer and fuel isolation valves, through SYSTEM A THRUSTER PAIR switches.	N/A	CDR's 28-vdc bus	
4CB231	ASC FEED 2 (5 amperes)	Applies d-c power to RCS system A ascent fuel and oxidizer interconnect valves, through SYSTEM A ASC FEED 2 switch.	N/A	CDR's 28-vdc bus	Interconnect valves permit propellant flow from ascent tanks to RCS tanks. SYSTEM A ASCENT FEED 1 switch must be set to ASCENT FEED 1.
4CB51	ASC FEED 1 (5 amperes)	Applies d-c power to RCS system A ascent fuel and oxidizer interconnect valves, through SYSTEM A ASC FEED 1 switch.	N/A	CDR's 28-vdc bus	Interconnect valves permit propellant flow from ascent tanks to RCS tanks. SYSTEM A ASCENT FEED 2 switch must be set to ASCENT FEED 2.
	FLIGHT DISPLAYS circuit breakers				
4CB168	THRUST (2 amperes)	Applies d-c power to THRUST indicator power supply and to part of auxiliary switching relay box through THR CONT switch.	N/A	CDR's 28-vdc bus	
4CB159	MISSION TIMER (2 amperes)	Applies d-c power to MISSION TIMER.	N/A	CDR's 28-vdc bus	
4CB133	CDR X-PNTR (2 amperes)	Applies d-c power to CDR's X-Pointer indicator, and to parts of auxiliary relay switching box through RATE/ERR MON and MODE SEL switches.	N/A	CDR's 28-vdc bus	
4CB123	RNG/RNG RT; ALT/ALT RT (2 amperes)	Applies d-c power to RANGE/ RANGE RATE or ALT/ALT RATE indicator.	N/A	CDR's 28-vdc bus	

Location/ Ref Des	Name and Position	Function	Circuit Breaker	Power Source	Remarks
Panel 11 (cont)					
4CB88	GASTA (2 amperes)	Applies d-c power to GASTA.	N/A	CDR's 28-vdc bus	
4CB97	CDR FDAI (2 amperes)	Applies d-c power to CDR's FDAI and to parts of auxiliary switching relay box through RATE/ERR MON and ATTITUDE MON switches.	N/A	CDR's 28-vdc bus	
4CB188	COAS (2 amperes)	Applies d-c power to forward or overhead optical alignment sight connectors via COAS switch.	N/A	CDR's 28-vdc bus	
4CB227	ORDEAL (2 amperes)	Applies d-c power to ORDEAL panel lighting circuits via LIGHTING switch.	N/A	CDR's 28-vdc bus	

PANEL 11

Location/ Ref Des	Name and Position	Function	Circuit Breaker	Power Source	Remarks
Panel 11 (cont)					
4CB74	PROPUL: DES He REG-VENT circuit breaker (5 amperes)	Applies d-c power to latching helium solenoid valves No. 1 and 2, through DESCENT He REG switches No. 1 and 2; and to fuel and oxidizer vent valves through DES PROPULSION FUEL VENT and OXID VENT switches.	N/A	CDR's 28-vdc bus	
	HEATERS circuit breakers				
4CB241	URINE LINE (2 amperes)	Applies d-c power to urine heater circuit, which maintains temperature of urine collector.	N/A	CDR's 28-vdc bus	
4CB156	RNDZ RDR STBY (5 amperes)	Applies d-c power to rendezvous radar heater control circuit to maintain temperature of crystal oven.	N/A	CDR's 28-vdc bus	
4CB155	RNDZ RDR OPR (7.5 amperes)	Applies d-c power to RR radar heater control circuit which maintains temperature of antenna gyros, and to rendezvous radar electronics assembly.	N/A	CDR's 28-vdc bus	

Location/ Ref Des	Name and Position	Function	Circuit Breaker	Power Source	Remarks
Panel 11 (cont)					
4CB157	LDG RDR (5 amperes)	Applies d-c power to heater control circuit in LR electronic assembly.	N/A	CDR's 28-vdc bus	
4CB129	DOCK WINDOW (2 amperes)	Applies d-c power to docking window heater.	N/A	CDR's 28-vdc bus	
4CB213	AOT (2 amperes)	Applies d-c power to AOT heaters.	N/A	CDR's 28-vdc bus	
4CB131	INST: SIG CONDR 1 circuit breaker (3 amperes)	Applies d-c power to power buffers and conditioners in signal conditioner electronic assemblies of IS.	N/A	CDR's 28-vdc bus	
	STAB/CONT circuit breakers				
4CB238	AEA (10 amperes)	Applies main d-c power and acts as on-off switch to AGS.	N/A	CDR's 28-vdc bus	
4CB3	ABORT STAGE (2 amperes)	Applies d-c power to abort stage electronics through ABORT STAGE switch.	N/A	CDR's 28-vdc bus	
4CB81	ATCA (PGNS) (2 amperes)	Applies d-c power through GUID CONT switch to select PGNS, and redundant bias power to ATCA. Also applies d-c power through PGNS MODE CONTROL switch to ATCA primary preamplifiers to be used by PGNS for attitude control.	N/A	CDR's 28-vdc bus	
4CB40	AELD (7.5 amperes)	Applies d-c power to system A of AELD/S.	N/A	CDR's 28-vdc bus	

Location/ Ref Des	Name and Position	Function	Circuit Breaker	Power Source	Remarks
Panel 11 (cont)					
4CB80	ENG CONT (2 amperes)	Applies d-c power for automatic switching from wide deadband to narrow deadband with descent engine on, for automatic switching from 2 to 4 jets with engine on, to CES for analog control of GDA when using AGS, to disable auto thrust control when using AGS, to reset engine START switch, and applies redundant power for manual engine stop when staging.	N/A	CDR's 28-vdc bus	
4CB59	ATT DIR CONT (10 amperes)	Applies d-c power to ACA's for direct firing of RCS jets, and to +X TRANSL pushbutton for direct firing of jets B1D, A2D, B3D, A4D. ROLL, PITCH, or YAW ATTITUDE CONTROL switch, when set to DIR, enables direct firing in selected axis.			
4CB106	ENG START OVRD (2 amperes)	Applies d-c power to engine START switch and redundant d-c power to ENG ARM switch.	N/A	CDR's 28-vdc bus	ENG ARM switch derives primary d-c power from STAB/CONT: ENG ARM circuit breaker (panel 16).
4CB69	DECA PWR (20 amperes)	Applies d-c power to DECA for descent engine-on function, and to activate trim fail circuit.	N/A	CDR's 28-vdc bus	
	ED circuit breakers				
4CB149	LDG GEAR FLAG (2 amperes)	Applies d-c power to IS to provide control of LDG GEAR DEPLOY flag.	N/A	CDR's 28-vdc bus	

Location/ Ref Des	Name and Position	Function	Circuit Breaker	Power Source	Remarks
Panel 11 (cont)					
4CB76	LOGIC PWR A (2 amperes)	Applies d-c power to ASCENT He PRESS, ASC He SEL, DES PRESS, LDG GEAR DEPLOY, MASTER ARM, STAGE, RCS PRESS, and ABORT STAGE switches.	N/A	CDR's 28-vdc bus	
4CB146	LTG: ANUN/DOCK/COMPNT circuit breaker (2 amperes)	Applies alternate d-c power to caution and warning annunciators, component caution lights, docking lights, and LUNAR CONTACT lights.	N/A	CDR's 28-vdc bus	
4CB236	LTG: UTIL circuit breaker (2 amperes)	Applies d-c power to CDR's and LMP's utility lights.	N/A	CDR's 28-vdc bus	
	HEATERS RCS SYS A/B-1 circuit breakers				
4CB221	QUAD 4 (7.5 amperes)	Applies d-c power to system No. 1 engine heaters of quad 4, systems A and B.	N/A	CDR's 28-vdc bus	
4CB220	QUAD 3 (7.5 amperes)	Applies d-c power to system No. 1 engine heaters of quad 3, systems A and B.	N/A	CDR's 28-vdc bus	
4CB219	QUAD 2 (7.5 amperes)	Applies d-c power to system No. 1 engine heaters of quad 2, systems A and B.	N/A	CDR's 28-vdc bus	
4CB218	QUAD 1 (7.5 amperes)	Applies d-c power to system No. 1 engine heaters of quad 1, systems A and B.	N/A	CDR's 28-vdc bus	
	ECS circuit breakers				
4CB138	SUIT FAN 1 (20 amperes)	Applies d-c power to suit fan No. 1 (suit circuit assembly) through SUIT FAN switch.	N/A	CDR's 28-vdc bus	

Location/ Ref Des	Name and Position	Function	Circuit Breaker	Power Source	Remarks
Panel 11 (cont)					
4CB107	CABIN FAN (5 amperes)	Applies d-c power to cabin fan through ECS relay box.	N/A	CDR's 28-vdc bus	
4CB141	GLYCOL PUMP 2 (5 amperes)	Applies d-c power to glycol pump No. 2 through GLYCOL PUMP switch.	N/A	CDR's 28-vdc bus	
4CB117	GLYCOL PUMP 1 (5 amperes)	Applies d-c power to glycol pump No. 1 through GLYCOL PUMP switch.	N/A	CDR's 28-vdc bus	
4CB217	GLYCOL PUMP AUTO TRNFR (2 amperes)	Energizes transfer relay to automatically switch pumps when low ΔP develops.	N/A	CDR's 28-vdc bus	
	COMM circuit breakers				
4CB228	UP DATA LINK (2 amperes)	Applies d-c power to digital uplink circuits or received S-band voice backup circuits, through UPDATA LINK switch.	N/A	CDR's 28-vdc bus	
4CB137	SEC S-BD XMTR/RCVR (5 amperes)	Applies d-c power to power supply in S-band section of CS through XMTR/RCVR switch. Also applies backup d-c power through XMTR/RCVR switch for BU voice/emergency key.	N/A	CDR's 28-vdc bus	
4CB136	SEC S-BD PWR AMPL (5 amperes)	Applies d-c power to power supply No. 2 in S-band power amplifier assembly.	N/A	CDR's 28-vdc bus	
4CB162	VHF B XMTR (5 amperes)	Applies d-c power to VHF B transmitter-receiver, and to exciter-power amplifier and modulator in VHF B transmitter through VHF B XMTR switch.	N/A	CDR's 28-vdc bus	

Location/ Ref Des	Name and Position	Function	Circuit Breaker	Power Source	Remarks
Panel 11 (cont)					
4CB87	VHF A RCVR (2 amperes)	Applies d-c power to VHF A IF and audio amplifier in VHF A receiver through VHF A RCVR switch.	N/A	CDR's 28-vdc bus	
4CB86	CDR AUDIO (2 amperes)	Applies d-c power to regulated power supply in CDR's audio center, to CDR's microphone amplifier through CDR's AUDIO CONT switch (NORM position), and to LMP's microphone through LMP's AUDIO CONT switch (BU position).	N/A	CDR's 28-vdc bus	
	PGNS circuit breakers				
4CB154	SIG STR DISP (2 amperes)	Applies d-c power to radar SIGNAL STRENGTH indicator.	N/A	CDR's 28-vdc bus	
4CB105	LDG RDR (10 amperes)	Applies d-c power and acts as on-off switch to LR power supply.	N/A	CDR's 28-vdc bus	
4CB29	RNDZ RDR (15 amperes)	Applies d-c power and acts as on-off switch to RR electronic assembly.	N/A	CDR's 28-vdc bus	
4CB122	LGC/DSKY (7.5 amperes)	Applies d-c power and acts as on-off switch to LGC power supply, CDU, PTA, and PSA.	N/A	CDR's 28-vdc bus	
4CB161	IMU STBY (5 amperes)	Applies d-c power and acts as on-off switch for the PIPA and IRIG heaters.	N/A	CDR's 28-vdc bus	Serves as on-off switch for temperature alarm thermostat. Is used in conjunction with temperature signals generated in IMU and PSA.

Location/ Ref Des	Name and Position	Function	Circuit Breaker	Power Source	Remarks
Panel 11 (cont)					
4CB124	IMU OPR (20 amperes)	Applies d-c power and acts as on-off switch to IMU, PIPA and IRIG pre-amplifiers and excitation, and PSA gimbal servo amplifiers. Applies d-c power to IMU CAGE switch.	N/A	CDR's 28-vdc bus	
	EPS circuit breakers				
4CB18	BAT FEED TIE (100 amperes)	Ties battery No. 3, 4, and 6, and during backup mode, battery No. 5 to CDR's d-c bus.	N/A	N/A	
4CB26	BAT FEED TIE (100 amperes)	Ties battery No. 3, 4, and 6, and, during backup mode, battery No. 5 to CDR's d-c bus.	N/A	N/A	
4CB184	CROSS TIE-BAL LOADS (30 amperes)	Ties CDR's feeder bus system to LMP's d-c bus through LMP's EPS: CROSS TIE-BAL LOADS circuit breaker.	N/A	CDR's 28-vdc bus	Provides redundant path for IS (ERA-2, CWEA, and PCMTEA), subsystem sensors, and EPS display circuit breakers.
4CB20	CROSS TIE BUS (100 amperes)	Ties CDR's feeder bus system to LMP's d-c bus through LMP's EPS: CROSS TIE BUS circuit breaker.	N/A	CDR's 28-vdc bus	Provides redundant path for IS (ERA-2, CWEA, and PCMTEA), subsystem sensors, and EPS display circuit breakers.
4CB4	XLUNAR BUS TIE (50 amperes)	Ties CDR's d-c bus translunar loads to LM single-point ground.	N/A	N/A	
4CB8	DES ECA CONT (5 amperes)	Applies d-c power to low- and high-voltage contact coils in ECA No. 1 and 2 through HI VOLTAGE and LOW VOLTAGE switches.	N/A	CDR's 28-vdc bus	

Location/ Ref Des	Name and Position	Function	Circuit Breaker	Power Source	Remarks
Panel 11 (cont)					
4CB10	DES ECA (2 amperes)	Applies d-c power to power supplies of both descent ECA's.	N/A	CDR's 28-vdc bus	
4CB6	ASC ECA CONT (5 amperes)	Applies d-c power to normal and backup contact coils in ECA No. 3 and 4 through NORMAL FEED and BACK UP FEED switches.	N/A	CDR's 28-vdc bus	
4CB15	ASC ECA (2 amperes)	Applies d-c power to power supplies of both ascent ECA's.	N/A	CDR's 28-vdc bus	
4CB12	INV 1 (30 amperes)	Applies d-c power to inverter No. 1 for generation of 115-volt, 400-cps a-c power, through INVERTER switch.	N/A	CDR's 28-vdc bus	
4CB22	DC BUS VOLT (3 amperes)	Applies d-c power to IS for conditioning to monitor CDR's d-c bus voltage.	N/A	CDR's 28-vdc bus	Permits monitoring through caution and warning, pulse-code-modulation (telemetry), and voltmeter sections.

Location/ Ref Des	Name and Position	Function	Circuit Breaker	Power Source	Remarks
Panel 12					
13S16	UP DATA LINK switch				
	VOICE BU	Enables DUA to process received S-band voice backup if received S-band audio circuits in PMP fail.	COMM: UPDATA LINK (panel 11)	CDR's 28-vdc bus	
	OFF	Disables voice backup and digital uplink capabilities of DUA.			
	DATA	Enables DUA to process digital uplink data from MSFN.			
15BS1	S-BAND T/R switch		N/A	LMP's audio center	
	S-BAND T/R	Enables routing received S-band audio to headset amplifier, and microphone amplifier outputs to PMP for S-band transmission.			
	OFF	Inhibits routing S-band transmitter and receiver outputs through LMP's audio center.			
	S-BAND RCV	Enables routing received S-band audio to headset amplifier			
15BR14	S-band VOLUME thumbwheel	Permits continuous adjustment of level of received S-band audio fed to headset amplifier.	N/A	LMP's audio center	
15BS3	ICS T/R switch		N/A	LMP's audio center	
	ICS T/R	Enables routing microphone amplifier outputs to CDR's headset amplifier through intercom bus to LMP's headset.			
	OFF	Inhibits intercom capability.			
	ICS RCV	Enables routing audio from intercom bus to LMP's headset.			

Location/ Ref Des	Name and Position	Function	Circuit Breaker	Power Source	Remarks
Panel 12 (cont)					
15BR7	ICS VOLUME thumbwheel	Permits continuous adjustment of level of audio fed from intercom bus to headset amplifier.	N/A	LMP's audio center	
15BS4	RELAY ON switch		N/A	Premod-ulation processor	
	RELAY ON	Enables voice conference capability with CSM, EVA and MSFN. Received VHF from CSM and EVA may be routed to MSFN via S-band transmitter.			LMP's and CDR's relay switches should not be set to RELAY ON simultaneously.
	RELAY OFF	Inhibits conference capability.			Appropriate Communications Subsystem switches are used to establish the desired relay mode.
15BS5	AUDIO CONT switch		COMM: SE AUDIO (panel 16)	LMP's 28-vdc bus	
	NORM	Selects LMP's audio center and microphone circuit.			
	BU	Selects CDR's audio center and microphone circuit for use by LMP.	COMM: CDR AUDIO (panel 11)	CDR's 28-vdc bus	
15BS6	MODE switch		N/A	LMP's audio center	
	VOX	Enables VOX control circuit in LMP's audio center to key intercom and selected transmitter(s).			
	ICS/PTT	Enables VOX control circuit in LMP's audio center to key intercom.			Selected transmitters are keyed only with push-to-talk (PTT) switches.
	PTT	Disables VOX control circuit in LMP's audio center.			All keying is accomplished with PTT switches.

Location/ Ref Des	Name and Position	Function	Circuit Breaker	Power Source	Remarks
Panel 12 (cont)					
15BR8	VOX SENS thumbwheel	Permits continuous adjustment of VOX sensitivity circuit threshold.	N/A	LMP's audio center	
15BS2	VHF A switch		N/A	LMP's audio center	
	T/R	Enables routing received VHF A audio to headset amplifier, and microphone amplifier outputs to VHF A transmitter for transmission. VOX keying voltage is routed to VHF A transmitter.			
	OFF	Inhibits routing VHF A transmitter and receiver outputs through LM Pilot's audio center.			
	RCV	Enables routing received VHF A audio to headset amplifier.			
15BR12	VHF A VOLUME thumbwheel	Permits continuous adjustment of level of received VHF audio (channel A) fed to headset amplifier.	N/A	LMP's audio center	
15BS9	VHF B switch		N/A	LMP's audio center	
	T/R	Enables routing received VHF B audio to headset amplifier, and microphone amplifier outputs to VHF B transmitter for transmission. VOX keying voltage is routed to VHF B transmitter.			
	OFF	Inhibits routing VHF B transmitter and receiver outputs through LMP's audio center.			
	RCV	Enables routing received VHF B audio to headset amplifier.			

Location/ Ref Des	Name and Position	Function	Circuit Breaker	Power Source	Remarks
Panel 12 (cont)					
15BR13	VHF B VOLUME thumbwheel	Permits continuous adjustment of level of received VHF audio (channel B) fed to headset amplifier.	N/A	LMP's audio center	
15BR15	MASTER VOL thumbwheel	Permits continuous, simultaneous adjustment of all audio output levels from headset amplifier.	N/A	LMP's audio center	
13S5	MODULATE switch		N/A	SPA	Normal setting of this switch is PM. Normally, FM setting is used for video transmissions.
	PM	Enables PM control circuit in SPA and disables frequency modulator in S-band transmitter.			
	FM	Enables FM control circuit and disables phase modulator and range gate amplifier in S-band transmitter.			
13S8	XMTR/RCVR switch				
	PRIM	Applies 28-volt d-c power to primary S-band transmitter-receiver power supply (dc-to-dc converter No. 1).	COMM: PRIM S-BD XMTR/ RCVR (panel 16)	LMP's 28-vdc bus	Enables S-band power amplifier.
	OFF	Interrupts d-c power to S-band transmitter-receiver power supplies.			
	SEC	Applies 28-volt d-c power to secondary S-band transmitter-receiver power supply (dc-to-dc converter No. 2).	COMM: SEC S-BD XMTR/ RCVR (panel 11)	CDR's 28-vdc bus	Enables S-band power amplifier.
13S2	PWR AMPL switch		N/A	SPA	S-band power amplifier is enabled only if XMTR/RCVR switch is set to PRIM or SEC.

Location/ Ref Des	Name and Position	Function	Circuit Breaker	Power Source	Remarks
Panel 12 (cont)					
	PRIM	Enables power supply No. 1 of S-band power amplifier (minimum of 18.6 watts).			Primary power to power supply No. 1 is provided by LMP's 28-vdc bus through COMM: PRIM S-BD PWR AMPL circuit breaker.
	OFF	Inhibits both S-band power-amplifier power supplies.			
	SEC	Enables power supply No. 2 of S-band power amplifier (minimum of 14.8 watts).			Primary power to power supply No. 2 is provided by CDR's 28-vdc bus through COMM: SEC S-BD PWR AMPL circuit breaker.
13S6	FUNCTIONS VOICE switch		N/A	SPA	
	VOICE	Applies 24 volts dc to 1.25 mc control circuit in SPA.			Audio modulates 1.25-mc subcarrier and is routed to selected S-band transmitter, phase modulated or frequency modulated.
	OFF	Disables all S-band voice transmission.			
	DN VOICE BU	Enables phase modulator section of S-band transmitter (regardless of setting of MODULATE switch) to transmit voice directly on S-band baseband, bypassing PMP.			Ranging or television function is interrupted in this position.
13S4	FUNCTIONS PCM switch		N/A	SPA	
	PCM	Enables 1.024-mc data control circuit in SPA.			
	OFF	Disables telemetry subcarrier transmission.			
	KEY	Applies 28 volts dc to emergency key circuit in SPA. PTT switches on ECS umbilicals are enabled to serve as Morse code keyers for emergency transmissions.			Selects PM mode; automatically interrupts all other S-band modes of operation.

Location/ Ref Des	Name and Position	Function	Circuit Breaker	Power Source	Remarks
Panel 12 (cont)					
13S1	FUNCTIONS RANGE switch	Enables selection of ranging or TV functions for S-band transmission.	N/A	S-band transmitter receiver assembly	
	RANGE	PM transmitter retransmits received coded pseudorandom noise signals to MSFN.			
	OFF/RESET	Inhibits range data transmission.			
	TV/CWEA ENABLE	Enables CWEA logic for S-BD RCVR caution light.			
13S7	VHF A XMTR switch		COMM: VHF A XMTR (panel 16)	LMP's 28-vdc bus	Transmitter frequency is 296.8 mc.
	VOICE/RNG	Enables simultaneous voice transmission and range capability via VHF A transmitter.			
	OFF	Disables VHF A transmitter.			
	VOICE	Enables only voice transmission capability.			
13S10	VHF A RCVR switch		COMM: VHF A RCVR (panel 11)	CDR's 28-vdc bus	Receiver frequency is 296.8 mc.
	ON	Applies 28-vdc d-c power to +20-volt regulator in VHF A receiver.			
	OFF	Interrupts d-c power to VHF A receiver.			
13R10	SQUELCH VHF A thumbwheel	Adjusts threshold level of received VHF A audio signal.	N/A	VHF A receiver	

Location/ Ref Des	Name and Position	Function	Circuit Breaker	Power Source	Remarks
Panel 12 (cont)					
13S12	VHF B XMTR switch		COMM: VHF B XMTR (panel 11)	CDR's 28-vdc bus	
	VOICE	Applies 28-volt d-c power to VHF B transmitter power supply and activates data mute circuit.			Transmitter frequency is 259.7 mc.
	OFF	Interrupts d-c power to VHF B transmitter.			
	DATA	Applies 28-volt d-c power to VHF B transmitter power supply and activates voice mute circuit.			TELEMETRY PCM switch must be set to LO (1,600-bits-per-second data rate).
13S15	VHF B RCVR switch		COMM: VHF B RCVR (panel 16)	LMP's 28-vdc bus	
	ON	Applies 28-volt d-c power to +20-volt regulator in VHF B receiver.			Receiver frequency is 259.7 mc.
	OFF	Interrupts d-c power to VHF B receiver.			
13R15	SQUELCH VHF B thumbwheel	Adjust threshold level of received VHF B audio signal.	N/A	VHF B receiver	
13S3	TELEMETRY BIOMED switch		COMM: PMP (panel 16)	LMP's 28-vdc bus	With this switch set to OFF and with FUNCTIONS VOICE switch set to VOICE BU, biomedical data transmission is interrupted, but voice intelligibility is increased because of additional speech-processing.
	LEFT	Applies d-c power to CDR's suit power supply for EKG monitoring and enables direct baseband voice/ biomed transmission, phase modulated or frequency modulated.			
	OFF	Interrupts d-c power to CDR's and LMP's suit power supply.			
	RIGHT	Applies d-c power to LMP's suit power supply for EKG monitoring and enables direct baseband voice/ biomed transmission, phase modulated or frequency modulated.			

Location/ Ref Des	Name and Position	Function	Circuit Breaker	Power Source	Remarks
Panel 12 (cont)					
13S13	TELEMETRY PCM switch		N/A	PCM programmer	
	HI	Enables pulse-code-modulation programmer high-speed gates.			
	LO	Disables high-speed gates; data rate is 1,600 bits per second.			Low bit rate permits data transmission to CSM.
13S11	RECORDER switch		N/A	LMP's audio center	
	ON	Applies key supply voltage to VOX control circuit of DSEA.			
	OFF	Interrupts key supply voltage to DSEA.			
13FL1	RECORDER TAPE talkback		N/A	DSEA	
	Gray display	Indicates tape in DSEA is moving and that voice is being recorded.			
	Barber-pole display	Indicates tape is not moving.			
14S3	TRACK MODE switch		AC BUS B: S-BD ANT (panel 11) COMM: S-BD ANT (panel 16)	CDR's 115-vac bus B LMP's 28-vdc bus	
	AUTO	Applies a-c and d-c power to steerable antenna electronics power supply. Antenna is enabled to track received MSFN signal automatically.			
	OFF	Interrupts a-c and d-c power to steerable antenna electronics power supply.			
	SLEW	Applies a-c and d-c power to steerable antenna electronic power supply. Antenna is positioned with PITCH and YAW controls through synchro transmitters.			

Location/ Ref Des	Name and Position	Function	Circuit Breaker	Power Source	Remarks
Panel 12 (cont)					
14B2	PITCH control	Positions S-band steerable antenna in pitch axis through synchro transmitter.	AC BUS B: S-BD ANT (panel 11)	CDR's 115-vac bus B	Control has range of -75° to +225°. DSKY value must be approached in ccw direction.
14M3	PITCH indicator	Displays pitch angle of S-band steerable antenna.	COMM: DISP (panel 16)	LMP's 28-vdc bus	Antenna pitch limits are 255° above and 75° below plane parallel to LM Y-Z plane.
14B1	YAW control	Positions S-band steerable antenna in yaw axis through synchro transmitter.	AC BUS B: S-BD ANT (panel 11)	CDR's 115-vac bus B	Control has range of -90° to +90°. DSKY value must be approached in ccw direction.
14M4	YAW indicator	Displays yaw angle of S-band steerable antenna.	COMM: DISP (panel 16)	LMP's 28-vdc bus	Antenna yaw limits are 75° to left and 75° to right of plane parallel to LM Y-Z plane.
14M1	SIGNAL STRENGTH indicator	Displays intensity of S-band signals received from MSFN. When peaked it indicates that S-band steerable antenna is pointing at earth. Also indicates which of the two omni antennas is providing best communications link to MSFN.	COMM: DISP (panel 16)	LMP's 28-vdc bus	Used in conjunction with PITCH and YAW controls to establish contact with MSFN.
14S6	VHF selector switch		N/A	Selected transmitter or antenna	Switch is spring loaded and has lock mechanism. To change switch setting, switch first must be pulled out.
	AFT	Selects VHF in-flight antenna No. 1.			
	FWD	Selects VHF in-flight antenna No. 2.			
	EVA	Used for VHF communications between EVA and LM during lunar stay.			

Location/ Ref Des	Name and Position	Function	Circuit Breaker	Power Source	Remarks
Panel 12 (cont) 1455	S-BAND selector switch FWD AFT SLEW	Selects S-band in-flight antenna No. 1. Selects S-band in-flight antenna No. 2. Selects S-band steerable antenna.	N/A	Selected transmitter or antenna	Switch is spring loaded and has lock mechanism. To change switch setting, switch first must be pulled out.

Location/ Ref Des	Name and Position	Function	Circuit Breaker	Power Source	Remarks
Panel 14					
4DS2	DC FEEDER FAULT component caution light	Indicates a short in either a bus or a feeder line.	N/A	CDR's 28-vdc bus LMP's 28-vdc bus	
4M2	VOLTS indicator	Displays voltage of each of six EPS batteries, CDR's and LMP's d-c buses, a-c bus and the EDS batteries, depending on setting of POWER/TEMP MON selector switch.	EPS: DISP (panel 16) CROSS TIE-BAL LOADS (panels 11 and 16)	LMP's 28-vdc bus	Green band (35.8 to 37.7 volts dc) on VOLTS indicator is equivalent to 112 to 118 volts ac. Range is 20 to 40 volts dc; 62.5 to 125 volts ac.
4M3	AMPS indicator	Indicates current flowing through each of six EPS batteries and the EDS batteries, depending on setting of POWER/TEMP MON selector switch.	EPS: DISP (panel 16) CROSS TIE-BAL LOADS (panels 11 and 16)	LMP's 28-vdc bus	Range is 0 to 120 amperes. Amperage of descent batteries (No. 1, 2, 3, and 4) is obtained by halving indicator reading.
4DS1	BAT FAULT component caution light	Goes on when any malfunctioning battery is selected with POWER/TEMP MON selector switch.	LTG: ANUN/DOCK/COMPNT (panel 16)	LMP's 28-vdc bus	When lit indicates reverse-current, overcurrent or overtemperature, condition of any one of six EPS batteries.
4S17	ED VOLTS switch	Selects voltage monitoring of EDS batteries.			POWER/TEMP MON selector switch must be set to ED/OFF.
	BAT A	Selects monitoring EDS battery A.			
	OFF	Disables voltage monitoring function.			
	BAT B	Selects monitoring EDS battery B.			
4S15	POWER/TEMP MON selector switch	Enables monitoring of voltage and current of the six EPS batteries, two EDS batteries, monitoring of	EPS: DISP (panel 16) CROSS TIE-BAL LOADS (panels 11 and 16)	LMP's 28-vdc bus	

Location/ Ref Des	Name and Position	Function	Circuit Breaker	Power Source	Remarks
Panel 14 (cont)					
		a-c and d-c bus voltage, and isolation of malfunctioning battery (overcurrent, reverse-current, and over-temperature condition).			
	ED/OFF	Enables voltage monitoring of EDS batteries.			
	BAT 1	Selects battery No. 1 to be monitored on AMPS and VOLTS indicators, and on BAT FAULT component caution light.			
	BAT 2	Same as for BAT 1 position, except display is for battery No. 2.			
	BAT 3	Same as for BAT 1 position, except display is for battery No. 3.			
	BAT 4	Same as for BAT 1 position, except display is for battery No. 4.			
	LUN	Same as for BAT 1 position, except display is for lunar battery.			
	BAT 5	Same as for Bat 1 position, except display is for battery No. 5.			
	BAT 6	Same as for BAT 1 position, except display is for battery No. 6.			
	CDR BUS	Voltage of CDR's d-c bus is displayed on VOLTS indicator.			In CDR BUS, LMP BUS, and AC BUS positions, AMPS indicator readings have no significance.
	LMP BUS	Voltage of LMP's d-c bus is displayed on VOLTS indicator.			
	AC BUS	Voltage of a-c bus is displayed on VOLTS indicator.			Indicator reading within green band indicates operating voltage of a-c bus (112 to 118 volts ac) is at proper level.

Location/ Ref Des	Name and Position	Function	Circuit Breaker	Power Source	Remarks
Panel 14 (cont)					
4S14	INVERTER switch	Controls application of a-c power to a-c bus.	EPS: INV 1 (panel 11) and	CDR's 28-vdc bus	A-C bus voltage is displayed on VOLTS indicator when POWER/ TEMP MON switch is set to AC/ BUS.

PANEL 14

Location/ Ref Des	Name and Position	Function	Circuit Breaker	Power Source	Remarks
Panel 14 (cont)					
	OFF/RESET	Disconnects high-voltage battery tap from line.			CDR BAT 4 barber-pole talkback is displayed.
4S8	CDR BAT 4 LO-V switch	Controls low-voltage output from descent battery No. 4 to feeder line.	EPS: DES ECA CONT (panel 11 and/or panel 16)	CDR's 28-vdc bus LMP's 28-vdc bus	Before selecting ON position, OFF/RESET position must be selected so that ECA contactors are reset, thereby enabling battery-power application to CDR's d-c bus. In event of overcurrent, ECA No. 2 takes battery No. 4 off line.
	ON	Connects low-voltage battery tap to line.			CDR BAT 4 gray/LO talkback is displayed.
	Center	Retains status of last initiated switch position.			
	OFF/RESET	Disconnects low-voltage battery tap from line.			CDR BAT 4 barber-pole talkback is displayed.
4FL4	CDR BAT 4 talkback		EPS: DISP (panel 16) CROSS TIE-BAL LOADS (panels 11 and 16)	LMP's 28-vdc bus	
	Gray display	Indicates descent battery No. 4 is on line with high voltage tap.			
	Gray/LO display	Indicates descent battery No. 4 is on line with low voltage tap.			
	Barber-pole display	Indicates descent battery No. 4 is off line.			
4S7	LUNAR BAT CDR switch	Controls voltage output from lunar battery to CDR's bus.	EPS: DES ECA CONT (panel 11 and/or panel 16)	CDR's 28-vdc bus LMP's 28-vdc bus	Before selecting ON position, OFF/RESET position must be selected so that ECA contactors are reset, enabling battery-power application to CDR's d-c bus. In event of overcurrent, ECA No. 2 takes lunar battery off line.

Location/ Ref Des	Name and Position	Function	Circuit Breaker	Power Source	Remarks
Panel 14 (cont)					
	ON	Connects lunar battery output to CDR's bus.			LUNAR BAT CDR talkback is displayed.
	Center	Retains status of last initiated switch position.			
	OFF/RESET	Disconnects lunar battery output from CDR's bus.			LUNAR BAT barber-pole talkback is displayed.
4S6	LUNAR BAT LMP switch	Controls voltage output from lunar battery to LMP's bus.	EPS: DES ECA CONT (panel 11 and/or panel 16)	CDR's 28-vdc bus LMP's 28-vdc bus	Before selecting ON position, OFF/RESET position must be selected so that ECA contactors are reset, enabling battery-power application to LMP's d-c bus. In event of overcurrent, ECA No. 1 takes lunar battery off line.
	ON	Connects lunar battery output to LMP's bus.			LUNAR BAT LMP talkback is displayed.
	Center	Retains status of last initiated switch position.			
	OFF/RESET	Disconnects lunar battery from from LMP's bus.			LUNAR BAT barber-pole talkback is displayed.
4FL10	LUNAR BAT talkback		EPS: DES ECA CONT (panel 11 and/or panel 16)	CDR's 28-vdc bus LMP's 28-bus	
	CDR display	Indicates lunar battery output is on CDR bus.			
	LMP display	Indicates lunar battery output is on LMP bus.			
	Barber-pole display	Indicates lunar battery is off line.			

Location/ Ref Des	Name and Position	Function	Circuit Breaker	Power Source	Remarks
Panel 14 (cont)					
4S9	DES BATS switch	Enables interruption of power from descent batteries to ascent stage.	EPS: ASC ECA CONT (panel 11 and/or panel 16)	CDR's 28-vdc bus LMP's 28-vdc bus	Switch is level locked to center position. Momentary actuation of switch sets latching relays in descent ECA's. Descent batteries are normally connected to ascent stage.
	CONNECT	Applies power from descent batteries to ascent stage.			DES BATS gray talkback is displayed.
	Center	Retains status of last initiated switch position.			
	DEADFACE	Energizes deadface relays, isolating descent batteries on ascent stage side of staging guillotine.			DES BATS barber-pole talkback is displayed.
4FL9	DES BATS talkback	Indicates whether descent stage deadface has been accomplished.	EPS: DISP (panel 16) CROSS TIE-BAL LOADS (panels 11 and 16)	LMP's 28-vdc bus	
	Gray display	Indicates descent batteries are connected to ascent stage.			
	Barber-pole display	Indicates descent batteries are disconnected and deadfaced.			
4S10	BAT 5 NORMAL LMP FEED switch	Controls connections of ascent battery No. 5 to LMP's bus.	EPS: ASC ECA CONT (panel 11 and/or panel 16)	CDR's 28-vdc bus LMP's 28-vdc bus	Switch is spring loaded to center position. Respective ECA controls battery connection to LMP's d-c bus; disconnects this battery in event of overcurrent.
	ON	Connects ascent battery No. 5 to bus.			BAT 5 NORMAL LMP FEED gray talkback is displayed.
	Center	Retains status of last initiated switch position.			
	OFF/RESET	Disconnects ascent battery No. 5 from bus; resets respective ECA contactors for overcurrent protection.			BAT 5 NORMAL LMP FEED barber-pole talkback is displayed.

Location/ Ref Des	Name and Position	Function	Circuit Breaker	Power Source	Remarks
Panel 14 (cont)					
4FL5	BAT 5 NORMAL LMP FEED talkback		EPS: DISP (panel 16)	LMP's 28-vdc bus	
	Gray display	Indicates ascent battery No. 5 is connected to LMP's bus.			
	Barber-pole display	Indicates ascent battery No. 5 is disconnected from LMP's bus.			
4S12	BAT 5 BACK UP CDR FEED switch	Controls connection of battery No. 5 to CDR's bus.	EPS: ASC ECA CONT (panel 11 and/or panel 16)	CDR's 28-vdc bus LMP's 28-vdc bus	Switch is spring loaded to center position. Respective ECA controls battery connection to CDR's d-c bus; disconnects this battery in event of overcurrent. If battery No. 6 or battery No. 5 feeder line fails, this switch is set to ON.
	ON	Connects ascent battery to bus.			BAT 5 BACK UP CDR FEED gray talkback is displayed.
	Center	Retains status of last initiated switch position.			
	OFF/RESET	Disconnects ascent battery No. 5 from line; resets respective ECA contactors for overcurrent protection.			BAT 5 BACK UP CDR FEED barber-pole talkback is displayed.
4FL7	BAT 5 BACK UP CDR FEED talkback		EPS: DISP (panel 16)	LMP's 28-vdc bus	
	Gray display	Indicates ascent battery No. 5 is connected to CDR's bus.			
	Barber-pole display	Indicates ascent battery No. 5 is disconnected from CDR's bus.			

Location/ Ref Des	Name and Position	Function	Circuit Breaker	Power Source	Remarks
Panel 14 (cont)					
4S11	BAT 6 NORMAL CDR FEED switch	Controls connection of ascent battery No. 6 to CDR's bus.	EPS: ASC ECA CONT (panel 11 and/or panel 16)	CDR's 28-vdc bus LMP's 28-vdc bus	Switch is spring loaded to center position. Respective ECA controls battery connection to CDR's d-c bus; disconnects this battery in event of overcurrent.
	ON	Connects ascent battery No. 6 to bus.			BAT 6 NORMAL CDR FEED gray talkback is displayed.
	Center	Retains status of last initiated switch position.			
	OFF/RESET	Disconnects ascent battery No. 6 from bus; resets respective ECA contactors for overcurrent protection.			BAT 6 NORMAL CDR FEED barber-pole talkback is displayed.
4FL6	BAT 6 NORMAL CDR FEED talkback		EPS: DISP (panel 16)	LMP's 28-vdc bus	
	Gray display	Indicates ascent battery No. 6 is connected to CDR's bus.			
	Barber-pole display	Indicates battery No. 6 is disconnected from CDR's bus.			
4S13	BAT 6 BACK UP LMP FEED switch	Controls connection of ascent battery No. 6 to LMP's bus.	EPS: ASC ECA CONT (panel 11 and/or panel 16)	CDR's 28-vdc bus LMP's 28-vdc bus	Switch is spring loaded to center position. Respective ECA controls battery connection to LMP's d-c bus; disconnects this battery in event of overcurrent. If battery No. 5 or battery No. 6 feeder line fails, this switch is set to ON.
	ON	Connects ascent battery No. 6 to bus.			BAT 6 BACK UP LMP FEED gray talkback is displayed.

Location/ Ref Des	Name and Position	Function	Circuit Breaker	Power Source	Remarks
Panel 14 (cont)					
	Center	Retains status of last initiated switch position.			
	OFF/RESET	Disconnects ascent battery No. 6 from line; resets respective ECA contactors for overcurrent protection.			BAT 6 BACK UP LMP FEED barber-pole talkback is displayed.
4FL8	BAT 6 BACK UP LMP FEED talkback		EPS: DISP (panel 16)	LMP's 28-vdc bus	
	Gray display	Indicates ascent battery No. 6 is connected to LMP's bus.			
	Barber-pole display	Indicates ascent battery No. 6 is disconnected from LMP's bus.			
13S17	COMM: UPLINK SQUELCH switch		N/A	N/A	
	ENABLE	Sets threshold level of received S-band audio to preset level.			
	DISABLE	Disables threshold capability of received S-band audio.			

Location/ Ref Des	Name and Position	Function	Circuit Breaker	Power Source	Remarks
Panel 16					
	FLT DISP circuit breakers				
4CB126	EVENT TIMER/SE FDAI (2 amperes)	Applies d-c power to EVENT TIMER and to LMP's FDAI and parts of auxiliary switching relay box, through RATE/ERR MON and ATTITUDE MON switches.	N/A	LMP's 28-vdc bus	
4CB134	SE X-PNTR (2 amperes)	Applies d-c power to LMP's X-Pointer indicator and to parts of auxiliary relay switching box through RATE/ERR MON switch.	N/A	LMP's 28-vdc bus	
	RCS SYS B circuit breakers				
4CB52	ASC FEED 1 (5 amperes)	Applies d-c power to RCS system B ascent fuel and oxidizer interconnect valves, through SYSTEM B ASC FEED 1 switch.	N/A	LMP's 28-vdc bus	Interconnect valves permit propellant flow from ascent tanks to RCS tanks. System B ASCENT FEED 2 switch must be set to ASCENT FEED 2.
4CB232	ASC FEED 2 (5 amperes)	Applies d-c power to RCS system B ascent fuel and oxidizer interconnect valves through SYSTEM B ASC FEED 2 switch.	N/A	LMP's 28-vdc bus	Interconnect valves permit propellant flow from ascent tanks to RCS tanks. System B ASCENT FEED 1 switch must be set to ASCENT FEED 1.
4CB49	ISOL VLV (5 amperes)	Applies d-c power to RCS system B oxidizer and fuel isolation valves through SYSTEM B THRUSTER PAIR switches.	N/A	LMP's 28-vdc bus	
4CB45	QUAD 1 TCA (10 amperes)	Applies d-c power to oxidizer and fuel valves of RCS system B, quad 1 TCA's.	N/A	LMP's 28-vdc	

Location/ Ref Des	Name and Position	Function	Circuit Breaker	Power Source	Remarks
Panel 16 (cont)					
4CB44	QUAD 2 TCA (10 amperes)	Applies d-c power to oxidizer and fuel valves of RCS system B, quad 2 TCA's.	N/A	LMP's 28-vdc bus	
4CB43	QUAD 3 TCA (10 amperes)	Applies d-c power to oxidizer and fuel valves of RCS system B, quad 3 TCA's.	N/A	LMP's 28-vdc bus	
4CB42	QUAD 4 TCA (10 amperes)	Applies d-c power to oxidizer and fuel valves of RCS system B, quad 4 TCA's.	N/A	LMP's 28-vdc bus	
4CB54	CRSFD (5 amperes)	Applies d-c power to oxidizer and fuel crossfeed valves through CRSFD switch.	N/A	LMP's 28-vdc bus	
4CB50	TEMP/PRESS DISP-FLAGS	Applies d-c power to REACTION CONTROL TEMP and PRESS indicators and to RCS talkbacks.	N/A	LMP's 28-vdc bus	
4CB121	PQGS DISP (2 amperes)	Applied d-c power to RCS system A and B pressure-volume-temperature (PVT) system.	N/A	LMP's 28-vdc bus	
4CB73	MAIN SOV (5 amperes)	Applies d-c power to RCS system B main oxidizer and fuel shutoff valves through SYSTEM B MAIN SOV switch.	N/A	LMP's 28-vdc bus	
	PROPUL circuit breakers				
4CB103	DISP/ENG OVRD LOGIC (2 amperes)	Applies d-c power to MAIN PROPULSION TEMP and PRESS indicators, ASCENT and DESCENT He REG talkbacks, and DES PROPULSION VENT talkbacks.	N/A	LMP's 28-vdc bus	Supplies redundant power to ascent engine firing circuit.

PANEL 16

Location/ Ref Des	Name and Position	Function	Circuit Breaker	Power Source	Remarks
Panel 16 (cont)					
4CB32	PQGS (2 amperes)	Applies d-c power to propellant quantity gaging system (PQGS) control unit through PRPLNT QTY MON switch.	N/A	LMP's 28-vdc bus	
4CB53	ASC He Reg (5 amperes)	Applies d-c power to latching helium solenoid valves No. 1 and 2 through ASCENT He REG switches.	N/A	LMP's 28-vdc bus	
	LTG circuit breakers				
4CB128	FLOOD (5 amperes)	Applies d-c power to cabin floodlights through FLOOD switch.	N/A	LMP's 28-vdc bus	
4CB160	TRACK (20 amperes)	Applies d-c power to tracking light electronic assembly.	N/A	LMP's 28-vdc bus	
4CB148	ANUN/DOCK/COMPNT (2 amperes)	Applies alternate d-c power to caution and warning annunciators, component caution lights, docking lights, and LUNAR CONTACT lights.	N/A	LMP's 28-vdc bus	
4CB147	MASTER ALARM (2 amperes)	Applies d-c power to MASTER ALARM lights and master alarm tone generators.	N/A	LMP's 28-vdc bus	
4CB75	ED: LOGIC PWR B circuit breaker (2 amperes)	Applies d-c power to ASCENT He PRESS, ASC He SEL, DES PRESS, LDG GEAR DEPLOY, MASTER ARM, RCS PRESS, and ABORT STAGE switches.	N/A	LMP's 28-vdc bus	

Location/ Ref Des	Name and Position	Function	Circuit Breaker	Power Source	Remarks
Panel 16 (cont)					
	STAB/CONT circuit breakers				
4CB28	AEA (10 amperes)	Applies main d-c power and acts as on-off switch to AGS.	N/A	LMP's 28-vdc bus	
4CB37	ENG ARM (2 amperes)	Applies d-c power to ENG ARM switch for arming ascent or descent engine.	N/A	LMP's 28-vdc bus	
4CB79	ASA (20 amperes)	Applies d-c power and acts as on-off switch to ASA.	N/A	LMP's 28-vdc bus	
4CB41	AELD (7.5 amperes)	Applies d-c power to system B of AELD/S.	N/A	LMP's 28-vdc bus	
4CB82	ATCA (7.5 amperes)	Applies d-c power to ATCA power supply.	N/A	LMP's 28-vdc bus	
4CB2	ABORT STAGE (2 amperes)	Applies d-c power to abort stage electronics through ABORT STAGE switch.	N/A	LMP's 28-vdc bus	
4CB230	ATCA (AGS) (3 amperes)	Applies d-c power through GUID CONT switch to select AGS, and bias power to ATCA. Also supplies d-c power through AGS MODE CONTROL and BAL CPL switches to ATCA primary preamplifiers.	N/A	LMP's 28-vdc bus	
4CB233	DES ENG OVRD (10 amperes)	Applies redundant d-c power to descent engine actuator valves.	N/A	LMP's 28-vdc bus	

Location/ Ref Des	Name and Position	Function	Circuit Breaker	Power Source	Remarks
Panel 16 (cont)					
	INST circuit breakers				
4CB99	CWEA (2 amperes)	Applies d-c power to CWEA.	N/A	CDR's 28-vdc bus LMP's 28-vdc bus	
4CB132	SIG SENSOR (2 amperes)	Applies d-c power to all preconditioned transducers throughout LM.	N/A	CDR's 28-vdc bus LMP's 28-vdc bus	
4CB125	PCM/TE (2 amperes)	Applies d-c power to PCMTEA.	N/A	CDR's 28-vdc bus LMP's 28-vdc bus	
4CB1	SIG CONDR 2 (2 amperes)	Applies d-c power to power buffers and conditioners in SCERA's.	N/A	CDR's 28-vdc bus LMP's 28-vdc bus	
	ECS circuit breakers				
4CB234	SUIT FLOW CONT (5 amperes)	Applies d-c power to LMP's and CDR's SUIT ISOL valves.	N/A	LMP's 28-vdc bus	SUIT ISOL valves afford torn suit protection to the astronauts. If suit pressure falls below 3.1 psia, SUIT ISOL valves close, CABIN REPRESS valve opens, and remains open until cabin pressure is 4.1 psia or greater.
	COMM circuit breakers				
4CB153	DISP (2 amperes)	Applies d-c power to SIGNAL STRENGTH indicator, and to PITCH and YAW indicators.	N/A	LMP's 28-vdc bus	

Location/ Ref Des	Name and Position	Function	Circuit Breaker	Power Source	Remarks
Panel 16 (cont)					
4CB85	SE AUDIO (2 amperes)	Applies d-c power to regulated power supply in LMP's audio center, to LMP's microphone amplifier through LMP's AUDIO CONT switch (NORM position), and to CDR's microphone amplifier through CDR's AUDIO CONT switch (BU position).	N/A	LMP's 28-vdc bus	
4CB115	VHF A XMTR (5 amperes)	Applies d-c power to VHF A transmitter-receiver and to exciter-power amplifier and modulator in VHF A transmitter through VHF A XMTR switch.	N/A	LMP's 28-vdc bus	
6CB114	VHF B RCVR (2 amperes)	Applies d-c power to VHF B IF and audio amplifier in VHF B receiver through VHF B RCVR switch.	N/A	LMP's 28-vdc bus	
4CB30	PRIM S-BD PWR AMPL (5 amperes)	Applies d-c power to power supply No. 1 in S-band power amplifier assembly.	N/A	LMP's 28-vdc bus	
4CB111	PRIM S-BD XMTR/RCVR (5 amperes)	Applies d-c power to power supply in S-band section of CS through XMTR/RCVR switch.	N/A	LMP's 28-vdc bus	
4CB110	S-BD ANT (2 amperes)	Applies d-c power to S-band steerable antenna power supply through TRACK MODE switch.	N/A	LMP's 28-vdc bus	
4CB102	PMP (2 amperes)	Applies d-c power to LMP's and CDR's communications umbilical assembly through TELEMETRY BIOMED switch and to PMP power supply.	N/A	LMP's 28-vdc bus	

Location/ Ref Des	Name and Position	Function	Circuit Breaker	Power Source	Remarks
Panel 16 (cont)					
4CB104	TV (2 amperes)	Applies d-c power to television camera (GFE) power supply.	N/A	LMP's 28-vdc bus	
	ECS circuit breakers				
4CB140	DISP (2 amperes)	Applies d-c power to PART PRESS CO_2, ENVIRONMENTAL CONTROL TEMP, and PRESS, GLYCOL TEMP, and QUANTITY indicators.	N/A	LMP's 28-vdc bus	
4CB96	GLYCOL PUMP SEC (5 amperes)	Applies d-c power to backup glycol pump in coolant recirculation assembly.	N/A	LMP's 28-vdc bus	
4CB108	LCG PUMP (5 amperes)	Applies d-c power to LCG pump.	N/A	LMP's 28-vdc bus	
4CB109	CABIN FAN CONT (2 amperes)	Applies d-c power to ECS O_2 pressure regulator valves (PRESS REG A and PRESS REG B).	N/A	LMP's 28-vdc bus	
4CB113	CABIN REPRESS	Applies d-c power to cabin repressurization emergency O_2 valve (CABIN REPRESS).	N/A	LMP's 28-vdc bus	
4CB119	SUIT FAN 2 (20 amperes)	Applies d-c power to suit fan No. 2 (suit circuit assembly) through SUIT FAN switch.	N/A	LMP's 28-vdc bus	
4CB120	SUIT FAN ΔP (2 amperes)	Applies d-c power to fan differential pressure sensor.	N/A	LMP's 28-vdc bus	

Location/ Ref Des	Name and Position	Function	Circuit Breaker	Power Source	Remarks
Panel 16 (cont)					
4CB112	DIVERT VLV (2 amperes)	Applies d-c power to suit circuit diverter valve.	N/A	LMP's 28-vdc bus	
4CB84	CO_2 SENSOR (2 amperes)	Applies d-c power to CO_2 sensor in suit circuit assembly.	N/A	LMP's 28-vdc bus	
	HEATERS: RCS SYS A/B-2 circuit breakers				
4CB242	MESA (15 amperes)	Applies d-c power to MESA heater circuit.	N/A	LMP's 28-vdc bus	
4CB222	QUAD 1 (7.5 amperes)	Applies d-c power to system No. 2 engine heaters of quad 1, systems A and B.	N/A	LMP's 28-vdc bus	
4CB223	QUAD 2 (7.5 amperes)	Applies d-c power to system No. 2 engine heaters of quad 2, systems A and B.	N/A	LMP's 28-vdc bus	
4CB224	QUAD 3 (7.5 amperes)	Applies d-c power to system No. 2 engine heaters of quad 3, systems A and B.	N/A	LMP's 28-vdc bus	
4CB225	QUAD 4 (7.5 amperes)	Applies d-c power to system No. 2 engine heaters of quad 4, systems A and B.	N/A	LMP's 28-vdc bus	
	HEATERS Circuit breakers				
4CB68	DISP (2 amperes)	Applies d-c power to HEATER CONT TEMP indicator.	N/A	LMP's 28-vdc bus	

Location/ Ref Des	Name and Position	Function	Circuit Breaker	Power Source	Remarks
Panel 16 (cont)					
4CB31	S-BD ANT (5 amperes)	Applies d-c power to four heaters in S-band steerable antenna electronics assembly.	N/A	LMP's 28-vdc bus	
4CB33	CAMR: SEQ circuit breaker (2 amperes)	Applies d-c power to sequence camera electrical outlet.	N/A	LMP's 28-vdc bus	
	EPS circuit breakers				
4CB16	DISP (2 amperes)	Applies d-c power to AMPS and VOLTS indicators and to subsystem talkbacks.	N/A	LMP's 28-vdc bus	
4CB21	DC BUS VOLT (2 amperes)	Applies d-c power to IS for conditioning to monitor LMP's d-c bus voltage.	N/A	LMP's 28-vdc bus	Permits monitoring through caution and warning, pulse-code-modulation (telemetry), and voltmeter sections.
4CB13	INV 2 (30 amperes)	Applies d-c power to inverter No. 2 for generation of 115-volt 400-cps, a-c, power, via INVERTER switch.	N/A	LMP's 28-vdc bus	
4CB14	ASC ECA (2 amperes)	Applies d-c power to power supplies of both ascent ECA's.	N/A	LMP's 28-vdc bus	
4CB7	ASC ECA CONT (5 amperes)	Applies d-c power to normal and backup contact coils in ECA No. 3 and 4 through NORMAL FEED and BACK UP FEED switches.	N/A	LMP's 28-vdc bus	
4CB11	DES ECA (2 amperes)	Applies d-c power to power supplies of both descent ECA's.	N/A	LMP's 28-vdc bus	

Location/ Ref Des	Name and Position	Function	Circuit Breaker	Power Source	Remarks
Panel 16 (cont)					
4CB9	DES ECA CONT (5 amperes)	Applies d-c power to low- and high-voltage contact coils in ECA No. 1 and 2 through HI VOLTAGE and LOW VOLTAGE switches.	N/A	LMP's 28-vdc bus	
4CB5	XLUNAR BUS TIE (50 amperes)	Ties LMP's d-c bus translunar loads to LM single-point ground.	N/A	N/A	
4CB19	CROSS TIE-BUS (100 amperes)	Ties LMP's feeder/bus system to CDR's d-c bus through CDR's EPS: CROSS TIE-BUS circuit breaker.	N/A	LMP's 28-vdc bus	
4CB183	CROSS TIE-BAL LOADS (30 amperes)	Ties LMP's feeder/bus system to CDR's d-c bus through CDR's EPS: CROSS TIE-BAL LOADS circuit breaker.	N/A	LMP's 28-vdc bus	
4CB25	BAT FEED TIE (100 amperes)	Ties battery No. 1, 2, and 5, and, during backup mode, battery No. 6, to LMP's d-c bus.	N/A	N/A	
4CB17	BAT FEED TIE (100 amperes)	Ties battery No. 1, 2, and 5, and, during backup mode, battery No. 6, to LMP's d-c bus.	N/A	N/A	

Location/ Ref Des	Name and Position	Function	Circuit Breaker	Power Source	Remarks
ECS					
7H8	SUIT GAS DIVERTER valve		ECS:DIVERT VLV (panel 16)	LMP's 28-vdc bus	Valve has provisions for automatic closure by signal from cabin pressure sensor when cabin pressure drops below 4.0 psia. Valve also closes automatically when PRESS REG A and PRESS REG B valves are set to EGRESS.
	PUSH-CABIN	Permits gas in suit circuit downstream of flow control valves to flow into cabin.			Enables suit circuit to maintain oxygen level of cabin within limits.
	PULL-EGRESS	Prevents gas in suit circuit from passing into cabin.			
7H3	CABIN REPRESS valve		ECS: CABIN REPRESS (panel 16)	LMP's 28-vdc bus	CABIN PRESS indicator provides positive feedback of results of CABIN REPRESS valve actuation.
	MANUAL	Permits unregulated oxygen flow to cabin from oxygen manifold.			
	AUTO	Enables CABIN REPRESS valve to respond to inputs from cabin pressure switch and suit circuit low pressure sensor.			AUTO mode is disable if PRESS REG A and PRESS REG B valves are set to EGRESS or if one valve is set to EGRESS and other valve is set to CLOSE.
	CLOSE	Prevents oxygen flow from oxygen manifold to cabin.			Valve opens fully when cabin pressure drops below 4.6 psia; it closes when pressure rises past 4.8 psia. Valve opens when suit circuit pressure drops to 3.12±0.18 psia; it closes when pressure rises past 4.1 psia.
7H4	PLSS FILL valve		N/A	N/A	
	OPEN	Permits oxygen flow to primary oxygen storage tank in PLSS.			
	CLOSE	Prevents oxygen flow to tank.			

Location/ Ref Des	Name and Position	Function	Circuit Breaker	Power Source	Remarks
ECS (cont)					
	DES	Selects descent water tank to provide water for primary water boiler, and for DES H_2O valve for period between earth launch and staging.			
	ASC	Selects both ascent water tanks to provide water for primary water boiler and for ASC H_2O valve.			
	SEC	Prevents water flow from water tanks to primary water boiler. Diverts all water from water separators to secondary water boilers. Ruptures water isolation valve disk, thus replenishing emergency coolant system loop with water backup.			Safety trigger must be lifted manually before setting valve to SEC.
7H13	ASC H_2O valve	Controls water flow for drinking and food preparation.	N/A	N/A	Water quantity is monitored by H_2O QTY indicator on panel 2.
	OPEN	Supplies water to water hose assembly.			
	CLOSE	Prevents water flow to water hose assembly.			
7H26	DES H_2O valve	Controls water flow, from descent water tank, for drinking, food preparation, and firefighting.	N/A	N/A	Water quantity is monitored by H_2O QTY indicator on panel 2.
	OPEN	Supplies water to water hose assembly.			
	CLOSE	Prevents water flow to water hose assembly.			

Location/ Ref Des	Name and Position	Function	Circuit Breaker	Power Source	Remarks
ECS (cont)					
7H22	SUIT TEMP valve	Permits regulation of suit circuit temperature by varying rate of glycol flow to suit regenerative heat exchanger.	N/A	N/A	Modulating faucet control.
	DECR COLD	Decreases glycol flow to suit regenerative heat exchanger to decrease suit circuit gas temperature.			
	INCR HOT	Increases glycol flow to suit regenerative heat exchanger to increase suit circuit gas temperature.			
7H17	CABIN GAS RETURN valve	Provides for return of cabin gas to suit circuit under normal operations or provides suit circuit integrity under rapid cabin decompression.	N/A	N/A	
	OPEN	Permits cabin gas to feed back to suit circuit for revitalization.			
	AUTO	Permits gas flow into, but not out of, suit circuit.			
	EGRESS	Closes valve, ensuring suit circuit integrity during unpressurized-cabin operations.			
7H19	CO_2 CANISTER SEL valve		N/A	N/A	
	PRIM	Permits suit circuit gas to be filtered through primary LiOH canister.			
	SEC	Routes suit circuit gas through secondary LiOH canister to permit replacement of primary canister.			

Location/ Ref Des	Name and Position	Function	Circuit Breaker	Power Source	Remarks
ECS (cont)					
7H9	SUIT CIRCUIT RELIEF valve	Prevents overpressurization of suit circuit.	N/A	N/A	Positive feedback of suit circuit pressure is provided by SUIT PRESS indicator.
	OPEN	Fully opens valve, overriding AUTO mode.			
	AUTO	Permits valve to respond to aneroid device measuring suit circuit pressure.			Valve is fully open when suit pressure is 4.7 psia or greater; fully closed when suit pressure is less than 4.3 psia.
	CLOSE	Fully closes valve, overriding AUTO mode.			
7H23	PRIMARY CO_2 CANISTER VENT pushbutton	When button is pressed, gas in canister is vented, facilitating removal of canister from suit circuit.	N/A	N/A	Momentary pushbutton; associated with primary LiOH canister.
	PRIMARY CO_2 CANISTER		N/A	N/A	After setting CO_2 CANISTER SEL valve to SEC, PRIMARY CANISTER is set to OPEN, to remove cartridge.
	OPEN	Opens cover for removal of CO_2 cartridge.			
	CLOSE	Closes cover after replacement of cartridge.			Setting valve to CLOSE places primary CO_2 canister back onstream.
	SECONDARY CO_2 CANISTER				
	OPEN	Opens cover for removal of CO_2 cartridge.			
	CLOSE	Closes cover after replacement of cartridge.			
7H24	SECONDARY CO_2 CANISTER vent pushbutton	When button is pressed, gas in canister is vented, facilitating removal of canister from suit circuit.	N/A	N/A	Momentary pushbutton; associated with secondary LiOH canister.

Location/ Ref Des	Name and Position	Function	Circuit Breaker	Power Source	Remarks
ECS (cont)					
7H10	WATER SEP SEL valve	Permits selection of either of two separators that separate condensed moisture from gas and vents this water to primary water boiler.	N/A	N/A	
	PUSH: SEP 1	Selects separator No. 1.			Normally separator No. 1 is on line.
	PUSH: SEP 2	Selects separator No. 2.			
7H11 7H20	Cabin relief and dump valves	Provides means for automatic cabin depressurization and cabin pressure relief.	N/A	N/A	Trigger on cabin relief and dump valve lever on cabin side of hatch must be squeezed to unlock lever, before valve can be set to another position. Valve also has two-position PULL TO DUMP control lever on exterior side of hatch. Exterior lever is spring loaded to "in" position. Pulling and holding lever out for approximately 90 seconds dumps cabin pressure. "Out" position is comparable to DUMP position of interior lever; "in" position of exterior lever is comparable to AUTO position.
	DUMP	Overrides AUTO position and permits astronaut to dump cabin pressure.			

Location/ Ref Des	Name and Position	Function	Circuit Breaker	Power Source	Remarks
ECS (cont)					
	AUTO	Permits valve to act normally as automatic pressure-relief device.			Aneroid sensor causes valve to open at pressure of 5.8 psia or greater, bleeding excess cabin pressure.
	CLOSE	Overrides AUTO position to close and lock relief valve so that no gas can escape during failure in AUTO mode.			
7H25	PRI EVAP FLOW #1 valve	Controls water flow from water manifold to primary water boiler.	N/A	N/A	
	OPEN	Permits water flow to primary water boiler.			Valve is set to OPEN when LM is first manned to permit water flow to primary water boiler.
	CLOSE	Shuts off water flow to primary water boiler.			
7H12	LIQUID GARMENT COOLING valve	Control water temperature to the liquid garment cooling suit.	N/A	N/A	
	COLD				
	HOT				
7H29	HI PLSS O_2 FILL valve				
	OPEN	Permits flow of high pressure oxygen to primary oxygen storage tank in PLSS.	N/A	N/A	
	CLOSE	Prevents oxygen flow to tank.			

Location/ Ref Des	Name and Position	Function	Circuit Breaker	Power Source	Remarks
AOT					
3H3	Eyepiece adjust lever	Moves eyepiece toward, or away from, eye of observer for focusing.	N/A	N/A	
3S23	MARK X pushbutton (momentary)	Provides signal to LGC, indicating that navigation star is aligned on X-hairline of reticle.	N/A	N/A	
3S25	MARK Y pushbutton (momentary)	Provides signal to LGC, indicating that navigation star is aligned on Y-hairline of reticle.	N/A	N/A	
3S24	REJECT pushbutton (momentary)	Provides signal to LGC, erasing mark-X or mark-Y signal previously entered into LGC. New mark-X or mark-Y signal may be entered into LGC after mark-R REJECT pushbutton is pressed.	N/A	N/A	
3R1	Reticle illumination control	Controls brightness of reticle illumination.	AC BUS B: AOT LAMP (panel 11)	CDR's 115-vac bus B	
3H1	Reticle control	Rotates reticle to superimpose spiral on target star, to zero the AOT counter, and to superimpose X-hairline on target star.	N/A	N/A	Used only during lunar surface alignment of IMU. Indicator must be zero during inflight IMU alignments.
3H2	Azimuth control	Rotates AOT prism to cover six 60° sectors, from left rear to right rear.	N/A	N/A	Image rotates as prism rotates.
	LR	Rotates prism to left rear position.			
	L	Rotates prism to left position.			
	F	Rotates prism to front position.			

Location/ Ref Des	Name and Position	Function	Circuit Breaker	Power Source	Remarks
AOT (cont)					
	R	Rotates prism to right position.			
	RR	Rotates prism to right rear position.			
	CL	Stores prism under protective cover.			
3M7	AOT indicator	Indicates position (in degrees) of reticle.	N/A	N/A	Five-place digital display. Extreme right digit is for tenths of a degree.
ACA 1A1 1A2	Attitude control assembly	Either astronaut can command vehicle attitude changes manually, using his ACA. ACA is installed with its longitudinal axis approximately parallel to LM X-axis; vehicle rotations correspond to astronaut hand movements in operating ACA. Clockwise or counterclockwise rotation of ACA about its longitudinal axis commands vehicle yaw right or left about LM X-axis. Forward or aft movement of ACA commands vehicle pitch down or pitch up, respectively, about LM Y-axis. Left or right movement of ACA commands roll left or roll right about LM Z-axis.	STAB/CONT: ATT DIR CONT (panel 11)	CDR's 28-vdc bus	
15AS10 15BS10	Push-to-talk switch	Keys intercom and/or selected transmitters.	N/A	N/A	Located on ACA control grip.
TTCA 1X1 1X2	Thrust/translation controller	The thrust/translation controller is, functionally, an integrated translation and thrust controller used to command vehicle translations by reaction control jet firing, and to throttle the descent engine between 10% and 92.5% maximum thrust	N/A	N/A	

Location/ Ref Des	Name and Position	Function	Circuit Breaker	Power Source	Remarks
TTCA (cont)		magnitude. It is a three-axis, tee-handle, left-hand controller. Vehicle translations correspond approximately to astronaut movement of the tee-handle. Leftward or rightward movement commands translation along LM Y-axis; inward or outward movement commands translation along LM Z-axis; upward or downward movement commands translation along LM X-axis.			
1H1 1H2	Throttle/jets select lever JETS THROTTLE	Lever mounted on TTCA affords integrated thrust and translation control capability. Provides RCS X-axis translation capability. Provides Y-axis translation by varying thrust magnitude of descent engine.	N/A	N/A	Regardless of lever position, controller has translation command capability along the Y-axis and Z-axis.
1H3 1H4	Throttle friction controller	Varies force required to move tee-handle upward or downward. Controller is operative when THROTTLE/JETS select lever is set to THROTTLE.	N/A	N/A	Force required to move tee-handle varies from minimum of 0.25 to 1.0 pound to maximum of 2.5 to 3.5 pounds.
ORDEAL 9S23	FDAI switches 1 ORB RATE	Determines type of total attitude to be displayed on FDAI's. Selects inputs to CDR's FDAI. Enables CDR's FDAI to display total attitude with respect to local horizontal reference frame.	N/A	N/A	

Location/ Ref Des	Name and Position	Function	Circuit Breaker	Power Source	Remarks
ORDEAL (cont)					
	INRTL	Enables CDR's FDAI to display total attitude with respect to IMU.			
9S24	2	Selects input to LMP's FDAI.	N/A	N/A	
	ORB RATE	Enables LMP's FDAI to display total attitude with respect to local horizontal reference frame.			
	INRTL	Enables LMP's FDAI to display total attitude with respect to IMU.			
9S25	EARTH-LUNAR switch	Used in conjunction with ALT SET control, inserts appropriate scale factor into ORDEAL electronics.	AC BUS B: ORDEAL (panel 11)	CDR's 115-vac bus B	Switch is always set to either LUNAR or OFF.
	EARTH	Supplies proper scale factor to ORDEAL electronics when LM is in earth orbit.	FLIGHT DISPLAYS: ORDEAL (panel 11)	CDR's 28-vdc bus	
	PWR OFF	Removes ac and dc power from ORDEAL.			
	LUNAR	Same as EARTH position, except that scale factor applies to lunar orbit.			
9R1	ALT SET control	Inserts LM orbital altitude into ORDEAL.	N/A	N/A	Control can be set from 10 to 310 nautical miles.
9S26	LIGHTING switch	Controls the brightness of the ORDEAL EL panel lighting.	AC BUS B: ORDEAL (panel 11)	CDR's 115-vac bus B	
	BRT	Selects bright light level.			
	OFF	Turns off panel lighting.			
	DIM	Selects dim light level.			

Location/ Ref Des	Name and Position	Function	Circuit Breaker	Power Source	Remarks
ORDEAL (cont)					
9S27	MODE switch	Inserts and maintains proper angular offset into FDAI's.	N/A	N/A	
	OPR/SLOW	When used with UP and DOWN positions of the SLEW switch, permits slewing the FDAI at 10X orbital rate in plus or minus direction. Used for fine adjustment.			
	HOLD/FAST	When used with UP and DOWN positions of SLEW switch, permits slewing FDAI at 200X orbital rate in plus or minus direction. Used for coarse adjustment.			
9S28	SLEW switch	Slews pitch indication on FDAI in plus (UP position) or minus (DOWN position) at rate dependent on setting of MODE switch.			
UTILITY LIGHT					
16S19 16S20	UTILITY LIGHTS switch (CDR and LMP)	Controls outlet that accepts portable utility light for use in cabin.	LTG UTIL (Panel 11)	CDR's 28-vdc bus	
	OFF	Deenergizes utility light.			
	DIM	Provides reduced illumination.			
	BRIGHT	Provides maximum illumination.			
17S9	RR GYRO SEL switch				
	PRIM	Inhibits voting logic and selects primary gyros.	N/A		
	AUTO	Enables voting logic to select primary or secondary gyros automatically.			
	SEC	Inhibits voting logic and selects secondary gyros.			

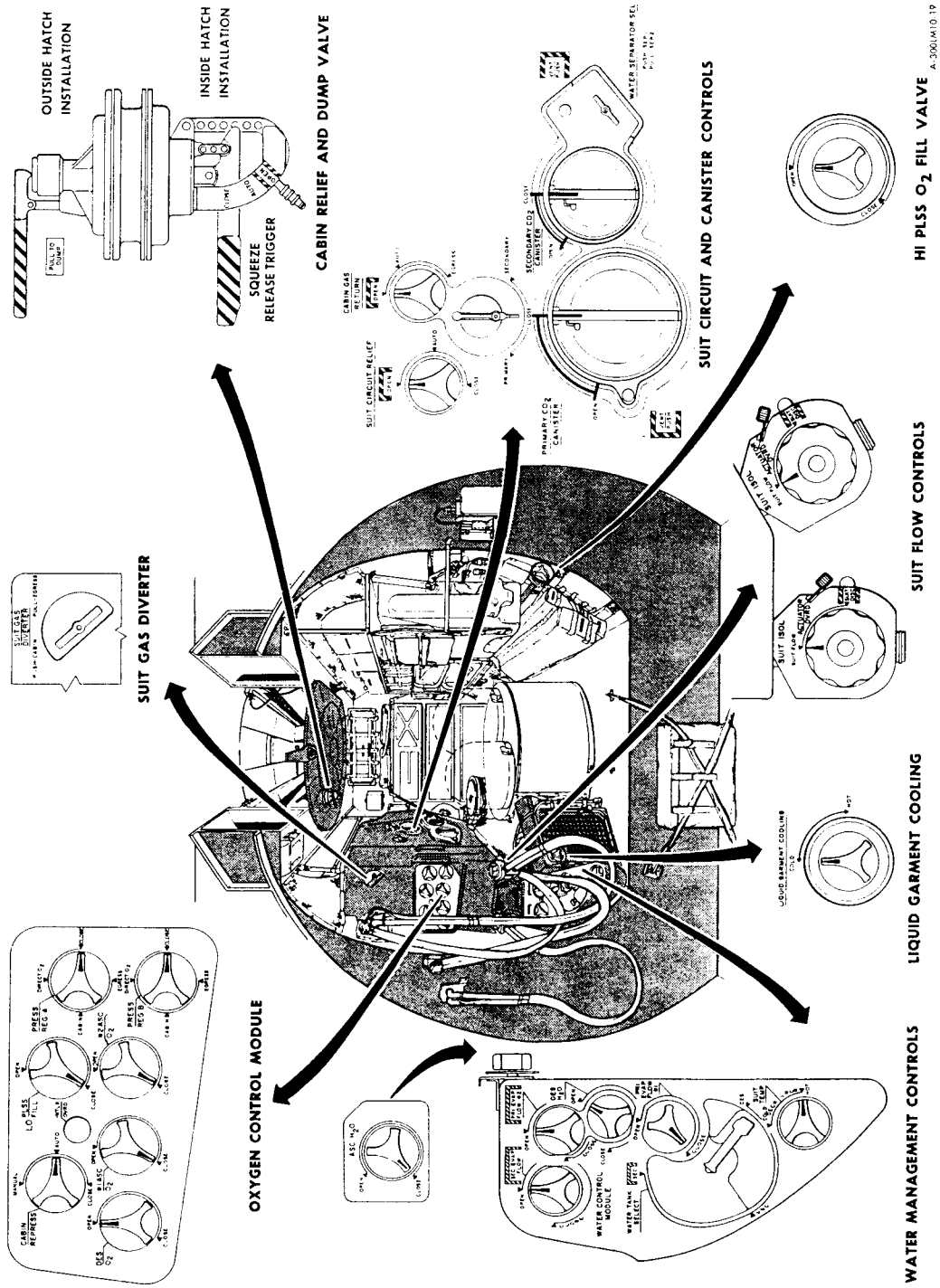

Figure 3-1. Environmental Control Subsystem Aft Bulkhead Controls

ABBREVIATION LIST

A

A/D	Analog-to-digital
AAP	Abort autopilot
abs	Absolute
ac (a-c)	Alternating current
ACA	Attitude controller assembly
AEA	Abort electronics assembly
AEAA	Ascent engine arming assembly
AELD	Ascent engine latching device
AF	Audio frequency
AFC	Automatic frequency control
AGC	Automatic gain control
AGS	Abort guidance section
ALT	Altitude
amp	Ampere(s)
AMPL	Amplifier
ANT	Antenna
ANUN	Annunciator
AOT	Alignment optical telescope
APS	Ascent propulsion section
A_R	AOT reticle angle
ARS	Atmosphere revitalization section
A_S	AOT shaft angle
ASA	Abort sensor assembly
ASC	Ascent
ASD	Apollo standard detonator
ASI	Apollo standard initiator
ASSY	Assembly
A_T	AOT trunnion angle
ATA	Abort timing assembly
ATCA	Attitude and translation control assembly
ATM	Altimeter transmitter multiplier
ATT	Attitude
ATTEN	Attenuator
AUTO	Automatic
AUX	Auxiliary

B

BAL	Balance
BAT	Battery
BD	Band
biomed	Biomedical
BIPRPLNT	Bipropellant
BPF	Band-pass filter
BU	Backup

C

CW/FM	Continuous wave frequency-modulated
C/W	caution and warning

C (cont)

cb	Circuit breaker
CBW	Constant bandwidth
CBX	C-band transponder
CCRD	Computer control and reticle dimmer assembly
CDH	Constant delta altitude
CDR	Commander
CDU	Coupling data unit
CENTANG	Central angle of transfer
CES	Control electronics section
CFP	Coelliptic flight plan
cg	Center of gravity
CKT	Circuit
CL	Close
CLR	Clear
CMC	Command module computer
CMD(S)	Command(s)
CMPTR	Computer
COAS	Crewman optical alignment sight
COMM	Communications
COMP	Comparator
CONDR	Conditioner
CONT	Control
cont	continued
cos	Cosine
CO_2	Carbon dioxide
CPL	Couple
cps	Cycles per second
CPS	Cold plate section
CRSFD	Crossfeed
CS	Communications Subsystem
CSI	Coelliptic sequence initiation
CSM	Command and Service module
CSS	Computer subsection
CT	Control transformer
CTR	Counter reset
CTS	Counter set
CW	Continuous wave
CWEA	Caution and warning electronics assembly
CX	Control transmitter

D

D1, 2, 3, 4	Doppler spectrum signals
D/A	Digital-to-analog
DAP	Digital autopilot
db	Decibel
dc (d-c)	Direct current
DCA	Digital command assembly
DECA	Descent engine control assembly

ABBREVIATION LIST (cont)

D (cont)

DECR	Decrease
DEDA	Data entry and display assembly
DEG	Degree(s)
DEMOD	Demodulator
DES	Descent
DET	Detector
DFI	Developmental Flight Instrumentation
DFR	Deadface relay
DID	Display inertial data (discrete)
DIF	Differential
DISP	Display
DIST	Distribution
DN	Down
DNKRPT	Downlink interrupt
DPS	Descent propulsion section
DRB	Deadface relay box
DSEA	Data storage electronics assembly
DSKY	Display and keyboard
DUA	Digital uplink assembly
DVS	Doppler velocity sensor

E

E	Elevation angle
ECA	Electrical control assembly
ECI	Electrical circuit interrupter
ECS	Environmental Control Subsystem
ED	Explosive device
EDC	End detonator cartridge
EDS	Explosive Devices Subsystem
EKG	Electro-cardiograph
EL	Electroluminescent
EMI	Electromagnetic interference
EMP	Emphasis
EMU	Extravehicular mobility unit
ENG	Engine
ENTR	Enter
EOS	Emergency oxygen system
EPS	Electrical Power Subsystem
ERA	Electronic replaceable assembly
ERR	Error
EVA	Extravehicular astronaut
EVVA	Extravehicular visor assembly
E_X	X-component of attitude error
E_Y	Y-component of attitude error
E_Z	Z-component of attitude error

F

F	Fahrenheit; forward
FC	LR tracker reference frequency
FDAI	Flight director attitude indicator
FDBK	Feedback
FF	Flip-flop
FITH	Fire in the hole

F (cont)

FM	Frequency modulation
FR	Range frequency
FOV	Field-of-view
fps	Foot (feet) per second
ft	Foot (feet)
FWD	Forward

G

g	Gravity
GASTA	Gimbal angle sequencing transformation assembly
gc	Gigacycle(s)
GDA	Gimbal drive actuator
GEN	Generator
GET	Ground elapsed time
GETI	Ground elapsed time of ignition
GMBL	Gimbal
GN&CS	Guidance, Navigation, and Control Subsystem
GOX	Gaseous oxygen
GRD	Ground
GSE	Ground support equipment
GUID	Guidance

H

H/X	Heat exchanger
h	Altitude
$\dot{h}$	Altitude rate
Ha	Apogee
He	Helium
HEA	High-efficiency antireflection
HF	High frequency
Hg	Mercury
HI	High
HNDRPT	Hand interrupt
H_p	Perigee
HPF	High-pass filter
HTR	Heater
HTS	Heat transport section
HV	High voltage
H_2O	Water

I

IAM	Incidental amplitude modulation
ICS	Intercommunication system
ID	Identification
IF	Intermediate frequency
IGA	Inner gimbal axis
IMU	Inertial measurement unit
INCR	Increase
INV	Inverter
IOPS	Interim Oxygen Purge System
IRIG	Inertial reference integration gyro

ABBREVIATION LIST (cont)

I (cont)

IS	Instrumentation Subsystem
ISOL	Isolation
I_S	Specific impulse
ISS	Inertial subsection
ITMG	Integrated Thermal micrometeroid garment

K

K	Constant
kc	Kilocycle(s)
kmc	Kilomegacycle(s)
kpps	Kilopulse(s) per second
KYRPT	Key interrupt

L

L	Left
LAT	Lateral
LCA	Lighting control assembly
LCG	Liquid-cooled garment
LDG	Landing
LDR	LUT deadface relay
LF	Low frequency
LGC	LM guidance computer
LH	Left hand
LiOH	Lithium hydroxide
LLC	Low-level commutators
LLS	Low-level sensor
LM	Lunar Module
LMP	LM mission programmer; LM Pilot
LO	Low
LOR	Lunar orbital rendezvous; Lockout relay
LOS	Line of sight
LPD	Landing point designator
LPF	Low-pass filter
LR	Landing radar
LSD	Least significant digit
LTG	Lighting
LUT	Launch umbilical tower
LV	Low voltage

M

M	Mode discrete
MALF	Malfunction
MAN	Manual
MANF	Manifold
max	Maximum
mc	Megacycle(s)
MDF	Mild detonating fuse
MF	Medium frequency
MFC	Main feed contactor
MGA	Middle gimbal axis

M (cont)

min	Minimum
MISC	Miscellaneous
MKRPT	Mark interrupt
mm	Millimeter(s)
MOD	Modulation
MON	Monitor
MPS	Main Propulsion Subsystem
MPX	Multiplexer
MSD	Most significant digit
msec	Millisecond(s)
MSFN	Manned Space Flight Network
mv	Millivolt(s)
mw	Milliwatt(s)

N

N	Noun; noise factor
N/A	Not applicable
NB	Navigation base
NC	Normally closed
nm	Nautical mile(s)
NO	Normally open
No.	Number
NORM	Normal
NRZ	Nonreturn-to-zero
N_2H_4	Hydrazine
N_2O_4	Nitrogen tetroxide

O

O/C	Overcurrent
O/T	Overtemperature
OCR	Overcurrent relay
OCPS	Oxygen cabin pressure section
OGA	Outer gimbal axis
OPR	Operate
OPR ERR	Operator error
ORDEAL	Orbital rate display - earth and lunar
OSC	Oscillator
OSCPCS	Oxygen supply and cabin pressure control section
OSS	Optical subsection
OT	Operational test
OVBD	Overboard
OVHD	Overhead
OXID	Oxidizer
O_2	Oxygen

P

P	Program
P/O	Part of
p-p	Peak-to-peak
PA	Power amplifier
PAM	Pulse amplitude modulation

ABBREVIATION LIST (cont)

P (cont)

PBAT	Pyro battery
PBW	Proportional bandwidth
PCA	Program coupler assembly
PCM	Pulse code modulation
PCMTEA	Pulse-code-modulation and timing electronics assembly
PDA	Power distribution assembly
PGA	Pressure garment assembly
PGNCS	Primary guidance, navigation, and control section
PGNS	Primary guidance and navigation section
PIP	Pulse integrating pendulum
PIPA	Pulsed integrating pendulous accelerometer
PKG	Package
PLSS	Portable life support system
PM	Phase modulation
PMP	Premodulation processor
ppm	Pulse(s) per minute
pps	Pulse(s) per second
PQGS	Propellant quantity gaging system
PRA	Program reader assembly
PRE	Program reader electronics
PRESS	Pressure
PRF	Pulse repetition frequency
PRIM	Primary
PRM	Pulse ratio modulator
PRN	Pseudorandom noise
PRPLNT	Propellant
PS	Power Supply
PSA	Power and servo assembly
psi	Pound(s) per square inch
psia	Pound(s) per square inch absolute
psid	Pound(s) per square inch differential
PSK	Phase-shift keyed
PT	Pressure transducer
PTA	Pulse torque assembly
PTT	Push-to-talk
PVT	Pressure-volume-temperature
PWR	Power

Q

Q	Quotient
QI	Quantity indicator
QTY	Quantity
quad	Quadrant
QUAD	Quodrature

R

R1, 2, 3	DSKY registers 1, 2, and 3
R	Rankine; right
R/C	Reverse current

R (cont)

RC	Resistance-capacitance
RCCA	Rough combustion cutoff assembly
RCR	Reverse-current relay
RCS	Reaction Control Subsystem
RCVR	Receiver
RD	Relay driver
RDG	Range data good
RDNG	Range data no good
RDR	Radar
REF	Reference
REG	Regulator
RES	Resolver
RET	Return
RF	Radio frequency
r_f	Radial rate
RGA	Rate gyro assembly
RH	Right hand
RJB	Relay junction box
rms	Root mean square
RNDZ	Rendezvous
RNG	Range
ROD	Rate of descent
RR	Rendezvous Radar
RRE	Rendezvous radar electronics
RT	Resistance thermometer
RUPT	Interrupt
RZ	Return-to-zero

S

S+N	Signal + noise
S/S	Subsystem
S&C	Stabilization and control
SBASI	Single bridgewire Apollo standard initiator
SBPA	S-band power amplifier
SBX	S-band transponder
SC	Signal conditioner
SCEA	Signal-conditioning electronics assembly
SCERA	Signal conditioner electronic replaceable assembly
SCO	Signal-controlled oscillator
SE	Systems Engineer
sec	Second(s); secondary
SEL	Select
SENS	Sensitivity
SEP	Separator
SEQ	Sequence
SERVO-AMPL	Servoamplifier
SG	Signal generator
SHe	Supercritical helium
SHFT	Shaft
SIG	Signal
sin	sine

ABBREVIATION LIST (cont)

S (cont)

SLA	Spacecraft Lunar Module adapter
SMRD	Spin motor rotation detector
SOL	Solenoid
SOM	Stable orbit midcourse
SOR	Stable orbit rendezvous
SOV	Shutoff valve
SP	Static pressure
SPA	Signal-processing assembly
SPDT	Single-pole double-throw
SRR	Shift-register reset
SRS.	Shift-register set
SS	Speed sensor
SSB	Single sideband
ST	Strain/temperature signal conditioner
STAB/CONT	Stabilization and control
STBY	Standby
SW	Switch
SYS	System

T

T/R	Transmitter-receiver
TΔ	Time to go until CDH maneuver
TAI	Absolute time
TBS	To be supplied
t_f	Time of flight from tig until target is reached
Tig	Time of ignition
T_N	Trim negative
T_P	Trim positive
TC	Thermocouple
TCA	Thrust chamber assembly
TE	Timing electronics equipment
TEMP	Temperature
TFF	Time of free fall to 3,000 ft
TFI	Time from Tig
THR	Thrust
TL	Tracker look-on
TLE	Tracking light electronics
TM	Telemetry
TPF	Transfer phase final
TPI	Transfer phase initiation
TPM	Transfer phase midcourse
TRANSL	Translation
TRUN	Trunnion
TS	Temperature sensor
TT	Temperature transducer
TTCA	Thrust/translation controller assembly
TTI	Time to initiate
TTIg	Time to ignition
TV	Television
TX	Telemetry transmitter

U

UDMH	Unsymmetrical dimethylhydrazine
UHF	Ultrahigh frequency
UPRUPT	Uplink interrupt
usec	Microsecond(s)

V

V	Verb
vac	Volts, alternating current
VCO	Voltage-controlled oscillator
V_{cx}	X-component of CSM velocity
V_{cy}	Y-component of CSM velocity
V_{cz}	Z-component of CSM velocity
VD	Velocity data
vdc	Volts, direct current
VDG	Velocity data good
VDNG	Velocity data no good
VEL	Velocity
VG	Magnitude of velocity to be gained
VGPS	Vehicle ground power supply
VHF	Very high frequency
VLV	Valve
VOL	Volume
VOX	Voice-operated relay
VPI	Valve position indicator
vrms	Volts root mean square
VSOM	Velocity sensor oscillator multiplier
V_x	X-component of LM velocity
V_{xa}	Altitude rate (landing radar)
V_y	Y-component of LM velocity
V_{ya}	Laterial velocity (landing radar)
V_z	Z-component of LM velocity
V_{za}	Forward velocity (landing radar)

W

W/B	Water boiler
WC	Weighted current
WCG	Weighted current gate
WMS	Water management section

X

XLUNAR	Translunar
XMTD	Transmitted
XMTR	Transmitter
XPNDR	Transponder
XTAL	Crystal

∢	Angle
Δh	Altitude differential

ABBREVIATION LIST (cont)

X (cont)

ΔP	Pressure differential
ΔR	Magnitude of difference between position state vectors before and after incorporation of mark data
Δro	Differential altitude in co-elliptic orbit
ΔV	Velocity change (differential)

X (cont)

ΔVm	Measured ΔV magnitude
$\Delta\phi c$	Gimbal angle change command
$\Delta\phi g$	Change in gimbal angle
ϕ	Phase
Σ	Sum (summing)
1X	One-speed resolver
16X	Sixteen-speed resolver

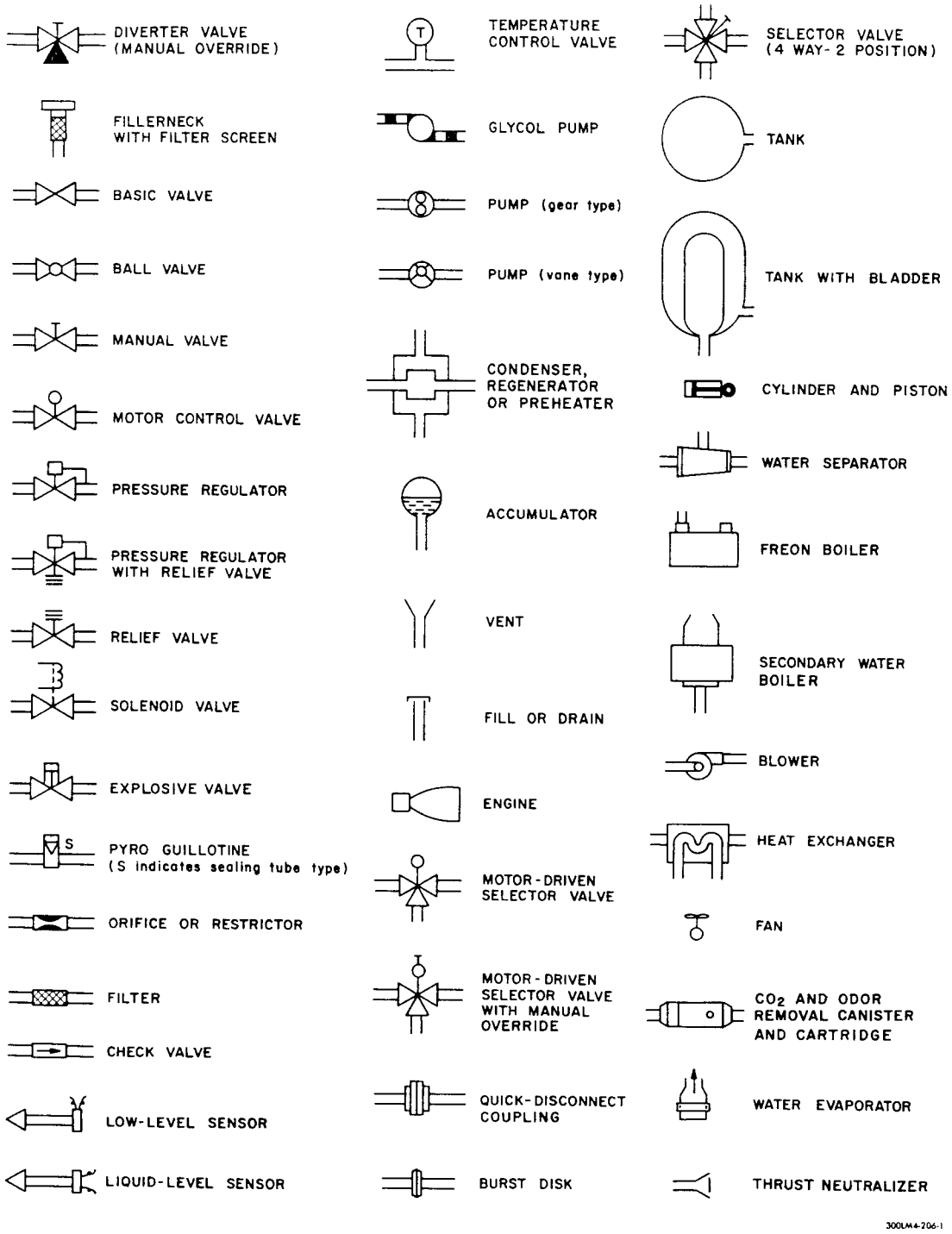
DIVERTER VALVE (MANUAL OVERRIDE)
FILLERNECK WITH FILTER SCREEN
BASIC VALVE
BALL VALVE
MANUAL VALVE
MOTOR CONTROL VALVE
PRESSURE REGULATOR
PRESSURE REGULATOR WITH RELIEF VALVE
RELIEF VALVE
SOLENOID VALVE
EXPLOSIVE VALVE
S
PYRO GUILLOTINE (S indicates sealing tube type)
ORIFICE OR RESTRICTOR
FILTER
CHECK VALVE
LOW-LEVEL SENSOR
LIQUID-LEVEL SENSOR
T
TEMPERATURE CONTROL VALVE
GLYCOL PUMP
PUMP (gear type)
PUMP (vane type)
CONDENSER, REGENERATOR OR PREHEATER
ACCUMULATOR
VENT
FILL OR DRAIN
ENGINE
MOTOR-DRIVEN SELECTOR VALVE
MOTOR-DRIVEN SELECTOR VALVE WITH MANUAL OVERRIDE
QUICK-DISCONNECT COUPLING
BURST DISK
SELECTOR VALVE (4 WAY-2 POSITION)
TANK
TANK WITH BLADDER
CYLINDER AND PISTON
WATER SEPARATOR
FREON BOILER
SECONDARY WATER BOILER
BLOWER
HEAT EXCHANGER
FAN
CO_2 AND ODOR REMOVAL CANISTER AND CARTRIDGE
WATER EVAPORATOR
THRUST NEUTRALIZER
300LM4-206-1

PUSHBUTTON SWITCH (MOMENTARY BREAK)

PS — PRESSURE SWITCH

C — CURRENT SENSOR

FT — FLOW TRANSDUCER

PP — PARTIAL-PRESSURE SENSOR

PT — PRESSURE TRANSDUCER

QI — QUANTITY INDICATOR

SC — SIGNAL CONDITIONER

SS — SPEED SENSOR

TP — TEMPERATURE PROBE

TT — TEMPERATURE TRANSDUCER

V — VIBRATION SENSOR

VPI — VALVE POSITION INDICATOR

VT — VOLTAGE TRANSDUCER

LLS — LOW-LEVEL SENSOR

DP — DIFFERENTIAL PRESSURE SENSOR

GOX — GASEOUS OXYGEN

FUEL

OXIDIZER

GLYCOL – PRIMARY LOOP

GLYCOL – SECONDARY LOOP

N_2 — NITROGEN

H_2 — HYDROGEN

H_2O — WATER

O_2 — OXYGEN

He — HELIUM

ELECTRICAL CONTACTORS (NON-LOCKING TYPE)

ANTENNA

CIRCUIT BREAKER (push-pull type)

CIRCUIT BREAKER (switch type)

FUSE

DIODE

DIODE (zener)

GROUND

POTENTIOMETER

RESISTOR

CAPACITOR

BATTERY

RELAY CONTACTS

RELAY OR SOLENOID COIL

MOMENTARY
LATCHING
} SWITCH & RELAY CONTACTS

SWITCH (SP3T)

PUSHBUTTON SWITCH (MOMENTARY MAKE)

SWITCH (SPST)

SWITCH (SPDT)

BUS BAR

HEATER

AMPLIFIER OR DRIVER (DC, Pre, or Buffer)

INVERTER AMPLIFIER (Inversion symbol is shown on inverted line)

LOGIC SYMBOLS

AND

NAND

OR

NOR

EXCLUSIVE OR

VARIABLE DELAY

S FF R I O — FLIP-FLOP

SYNCHRO RESOLVER

M — MOTOR

CX — CONTROL TRANSMITTER

CT — CONTROL TRANSFORMER

CURRENT MONITOR

ELECTRICAL CONTACTORS

A 300LM4 206 2

ALPHABETICAL INDEX

	Paragraph
800-cps Synchronization Loop	2.1.3.6.5
A-C Section	2.5.3.3
Abort Electronics Assembly	2.1.4.4.2
Abort Guidance Section	
Descent or Ascent Engine and Thrust Chamber Assembly Burn	2.4.4.9
Guidance Routines	2.1.4.4.8
Introduction	2.1.1.2
Initialization Function	2.1.4.4.6
Major Component/Functional Description	2.1.4.4
Modes of Operation	2.1.4.4.7
Self-Test Routine	2.1.4.4.5
Thrust Termination	2.1.4.4.10
Abort Sensor Assembly	2.1.4.4.1
AC-to-DC Converters	2.9.4.2.3
Aft Equipment Bay	1.2.2.3
AGS Power Distribution	2.1.3.6.2
AGS Warning Light	2.9.4.4.27
Alignment Optical Telescope	
Lights	2.10.2.2.6
Major Component/Functional Description	2.1.4.2.1
Analog Multiplexer Gate Drivers	2.9.4.3.1
Analog Signal Isolating Buffers	2.9.4.2.4
Analog-to-Digital Conversion	2.1.4.1.3
Analog-to-Digital Converter	2.9.4.3.3
Antenna Assembly (LR)	2.2.4.3.1
Antenna Assembly (RR)	2.2.4.1.1
Antenna Assembly (RRT)	2.2.4.2.1
Antenna Beam Configuration	2.2.3.3.4
Antenna Equipment (CS)	2.7.4.3
Antenna Orientation, RR	2.2.3.1.3
Antenna Positions (LR)	2.2.3.3.3
Antenna Supports	1.2.2.5
Antennas (CS)	2.7.6.1
Apollo Lunar Surface Experiment Package	2.11.10
Armrests	2.11.5.1
ASC HI REG Caution Light	2.9.4.4.16
ASC PRESS Warning Light	2.9.4.4.17
ASC QTY Caution Light	2.9.4.4.18
Ascent Engine Arming Assembly	2.1.4.5.7
Ascent Engine Control	2.1.3.5.4
Ascent Oxygen Tanks	2.6.4.3.2
Ascent Propellant Tank Pressurization	2.8.3.6
Ascent Propulsion Section	
Functional Description	2.3.8
Interfaces	2.3.7
Major Component/Functional Description	2.3.9
Operational Limitations and Restrictions	2.3.11
Performance and Design Data	2.3.10
Ascent Stage Batteries	2.5.4.2
Ascent Stage Electrical Control Assemblies	2.5.4.5
Ascent Stage General Description	1.2.1
Ascent Stage Power	2.5.3.5.5
Ascent Stage Structure	1.2.2
Ascent Stage Water Tanks	2.6.4.3.2
Atmosphere Revitalization Section	
Functional Description	2.6.3.1
Introduction	2.6.1.1
Major Component/Functional Description	2.6.4.1
Attenuators	2.9.4.2.2
Attitude and Translation Control Assembly	2.1.4.5.3
Attitude Control	2.1.3.5.1
Attitude Controller Assemblies	2.1.4.5.1

ALPHABETICAL INDEX (cont)

	Paragraph
Attitude Hold Mode	2.1.3.5.1
Automatic Mode	2.1.3.5.1
Automatic Tracking Mode	2.2.3.1.1
BATTERY Caution Light	2.9.4.4.15
Battery Control Relay Assembly	2.5.4.4
Battery Status-Monitoring Circuits	2.5.3.4.1
Battery Voltage- and Current-Monitoring Circuits	2.5.3.4.2
Bioinstrumentation	2.11.4.5.1
Buddy System Umbilical	2.11.3.3
Burst Disk Assemblies	2.3.4.7
Cabin Pressure Switch	2.6.4.2.7
Cabin Relief and Dump Valves	2.6.4.2.6
CABIN Warning Light	2.9.4.4.2
Calibrator	2.9.4.3.4
Cartridges	2.8.4.1.1
Caution and Warning Electronics Assembly	2.9.4.4
CES AC Warning Light	2.9.4.4.21
CES DC Warning Light	2.9.4.4.23
CES Power Distribution	2.1.3.6.3
Circuit Breaker and EPS Control Panels	2.5.4.9
Circuit Interrupters (Deadface Connectors)	2.8.4.1.6
Circuitry (ED)	2.8.3.1
Cold Plates and Rails	2.6.3.4.3
Combustion Chamber and Extension Nozzle (RCS)	2.4.4.5.3
Combustion Chamber and Nozzle Extension (DPS)	2.3.4.13
Combustion Chamber Assembly (APS)	2.3.9.8
Communications Carrier	2.11.2.3
Communications Subsystem	
Functional Description	2.7.3
Interfaces	2.7.2
Introduction	2.7.1
Major Component/Functional Description	2.7.4
Operational Limitations and Restrictions	2.7.6
Performance and Design Data	2.7.5
Computer Control and Reticle Dimmer Assembly	2.1.4.2.2
Control Electronics Section	
Introduction	2.1.1.3
Major Component/Functional Description	2.1.4.5
Control and Display Panels	1.2.2.1.1
Controls (PGA)	2.11.2.2.4
Coolant Accumulator	2.6.4.4.1
Coolant Filters	2.6.4.4.2
Coolant Pumps	2.6.4.4.3
Coupling Data Unit	2.1.4.1.3
Crew Compartment	1.2.2.1
Crew Life Support	2.11.4
Crew Miscellaneous Equipment	2.11.7
Crew Personal Equipment	2.11
Crew Support and Restraint Equipment	2.11.5
Crew Transfer Tunnel	1.5.1
Crew Water System	2.11.4.1
Crewman Optical Alignment Sight	2.11.6.1
Cryogenic Helium Storage Vessel	2.3.4.2
CM Forward Hatch	2.11.6.6
D-C Amplifiers	2.9.4.2.1
D-C Section	2.5.3.2
Data Entry and Display Assembly	2.1.4.4.3
Data Operations	2.7.3.4
Data Storage Electronics Assembly	2.9.4.5
DC BUS Warning Light	2.9.4.4.13
Deadface Relay Box	2.5.4.7

ALPHABETICAL INDEX (cont)

	Paragraph
Decision Network	2.9.4.3.11
DEDA Operation	2.1.4.4.4
Deployment and Downlock Mechanism	1.3.2.2.5
DES QTY Warning Light	2.9.4.4.19
DES REG Warning Light	2.9.4.4.20
Descent Engine Control	2.1.3.5.3
Descent Engine Control Assembly	2.1.4.5.5
Descent Engine Control Functional Description	2.3.3.31
Descent Oxygen Tank	2.6.4.2.1
Descent Propellant Tank Pressurization	2.8.3.4
Descent Propellant Tank Venting	2.8.3.8
Descent Propulsion Section	
Functional Description	2.3.3
Interfaces	2.3.2
Major Component/Functional Description	2.3.4
Operational Limitations and Restrictions	2.3.6
Performance and Design Data	2.3.5
Descent Stage Batteries	2.5.4.1
Descent Stage Electrical Control Assemblies	2.5.4.3
Descent Stage General Description	1.3.1
Descent Stage Power (High-Voltage Taps)	2.5.3.5.4
Descent Stage Power (Low-Voltage Taps)	2.5.3.5.2
Descent Stage Structure	1.3.2
Descent Stage Water Tank	2.6.4.3.1
Digital-to-Analog Conversion	2.1.4.1.3
Digital Multiplexer	2.9.4.3.6
Digital Uplink Assembly	2.7.4.2.2
Direct Mode	2.1.3.5.1
Discrete Signal Isolating Buffers	2.9.4.2.5
Display and Keyboard Assembly	2.1.4.3.2
Docking Aids	1.5.1.6
Docking Aids and Tunnel Hardware	2.11.6
Docking Drogue	1.5.1.4
Docking Hatches	1.5.1.3
Docking Lights	2.10.2.1.1
Docking Probe	1.5.1.5
Docking Target	2.11.6.2
Docking Target (Lighting)	2.10.2.1.3
Docking Tunnel	1.2.2.2.1
Drogue Assembly	2.11.6.3
DSKY Operation Under LGC Control	2.1.4.3.4
ED Batteries	2.8.4.2
ED Bus-Arming	2.8.3.2
ED RELAYS Caution Light	2.9.4.4.28
ECS Caution Light	2.9.4.4.3
Electrical Power Subsystem	
Functional Description	2.5.3
Interfaces	2.5.2
Introduction	2.5.1
Major Component/Functional Description	2.5.4
Operational Limitations and Restrictions	2.5.6
Performance and Design Data	2.5.5
Electrical Power Subsystem (PLSS)	2.11.2.5.5
Electrical Umbilical	2.11.3.2
Electronics Assembly (LR)	2.2.4.3.2
Electronics Assembly (RR)	2.2.4.1.2
Electronics Assembly (RRT)	2.2.4.2.2
Emergency Medical Equipment	2.11.4.5.3
EMU Maintenance Kit	2.11.2.7
EMU Waste Management System	2.11.4.3
ENG GMBL Caution Light	2.9.4.4.10
Engine Assembly (APS)	2.3.8.3

ALPHABETICAL INDEX (cont)

	Paragraph
Engine Assembly (DPS)	2.3.3.3
Environmental Control Subsystem	
Functional Description	2.6.3
Interface	2.6.2
Introduction	2.6.1
Major Component/Functional Description	2.6.4
Operational Limitations and Restrictions	2.6.6
Performance and Design Data	2.6.5
EPS Stages of Operation	2.5.3.5
Explosive Devices	2.8.4.1
Explosive Devices Relay Boxes	2.8.4.3
Explosive Devices Subsystem	
Functional Description	2.8.3
Interfaces	2.8.2
Introduction	2.8.1
Major Component/Functional Description	2.8.4
Operational Limitations and Restrictions	2.8.6
Performance and Design Data	2.8.5
Explosive Valves (APS)	2.3.9.1
Explosive Valves (DPS)	2.3.4.1
Explosive Valves (RCS)	2.4.4.1
Exterior Lighting	2.10.2.1
External Power and Signal Interface	2.5.2.1
Extravehicular Boots	2.11.2.4.2
Extravehicular Communications System	2.11.2.5.6
Extravehicular Gloves	2.11.2.4.1
Extravehicular Mobility Unit	2.11.2
Failure Detection	2.1.4.1.3
Fecal Device	2.11.4.3.2
Feedwater Loop	2.11.2.5.3
Final Docking Latches	1.5.1.1
Flat Cold Plates and Cold Rails	2.6.4.4.6
Floodlighting	2.10.2.2.3
Flow Control Valves	2.3.4.10
Food Preparation and Consumption	2.11.4.2
Footpad	1.3.2.2.2
Forward Hatch	1.2.2.1.2
Frequency-to-DC Converter	2.9.4.2.6
Fuel and Oxidizer Shutoff Valves	2.3.4.11.2
Fuel and Oxidizer Tanks	2.4.4.4
Fuel and Oxidizer Valve Assemblies	2.4.4.5.1
Fuel/Helium Heat Exchanger	2.3.4.3
Functional Description	
Ascent Propulsion Section	2.3.8
Communications Subsystem	2.7.3
Descent Propulsion Section	2.3.3
Electrical Power Subsystem	2.5.3
Environmental Control Subsystem	2.6.3
Explosive Devices Subsystem	2.8.3
Guidance, Navigation, and Control Subsystem	2.1.3
Instrumentation Subsystem	2.9.3
Lighting	2.10.3
Radar Subsystem	2.2.3
Reaction Control Subsystem	2.4.3
General Operation of Abort Guidance Section	2.1.3.4
General Operation of Control Electronics Section	2.1.3.5
General Operation of Primary Guidance and Navigation Section	2.1.3.3
General Operation, Landing Radar	2.2.3.3.2
General Operation, Rendezvous Radar	2.2.3.1.2
General Operation, RR Transponder	2.2.3.2.2
Gimbal Angle Sequencing Transformation Assembly	2.1.4.5.9
Gimbal Drive Actuators	2.1.4.5.6

ALPHABETICAL INDEX (cont)

	Paragraph
Gimbal Ring and Gimbal Drive Actuators	2.3.4.14
GLYCOL Caution Light	2.9.4.4.5
GN&CS - CS Interface	2.1.2.5
GN&CS - ECS Interface	2.1.2.4
GN&CS - EDS Interface	2.1.2.6
GN&CS - EPS Interface	2.1.2.3
GN&CS - IS Interface	2.1.2.7
GN&CS - MPS Interface	2.1.2.1
GN&CS - RCS Interface	2.1.2.2
GSE-Supplied Prelaunch Power	2.5.3.5.1
Guidance, Navigation, and Control Subsystem	
Functional Description	2.1.3
Interfaces	2.1.2
Introduction	2.1.1
Major Component/Functional Description	2.1.4
Operational Limitations and Restrictions	2.1.6
Performance and Design Data	2.1.5
Handholds	2.11.5.2
Hardover Mode	2.1.3.5.1
Heat Transport Section	
Functional Description	2.6.3.4
Introduction	2.6.1.4
Major Component/Functional Description	2.6.4.4
HEATER Caution Light	2.9.4.4.11
Heaters	2.4.3.4.2
Helium Isolation Solenoid Valves (APS)	2.3.9.2
Helium Isolation Solenoid Valves (DPS)	2.3.4.4
Helium Isolation Valves and Compatibility Valves	2.8.4.1.5
Helium Pressure Regulator Assemblies (APS)	2.3.9.3
Helium Pressure Regulator Assembly (RCS)	2.4.4.2
Helium Pressure Regulators (DPS)	2.3.4.5
Helium Pressurization Section	2.4.3.1
Helmet	2.11.2.2.2
High-Level Analog Multiplexer and High-Speed Gates	2.9.4.3.2
High-Pressure Oxygen Control Assembly	2.6.4.2.2
Ignition and Shutdown	2.1.3.5.3
IMU Case	2.1.4.1.2
IMU Failure-Detection Assembly	2.1.4.1.2
IMU Temperature Control Assembly	2.1.4.1.2
In-Flight Data	2.11.7.1
Inertial Measurement Unit	2.1.4.1.2
Inertial Reference Integrating Gyros	2.1.4.1.2
Inertial Subsection	
Functional Loops	2.1.4.1.7
Modes of Operation	2.1.4.1.8
Injector Assembly	2.3.9.7
Injector Head Assembly	2.4.4.5.2
Inner Gimbal Assembly	2.1.4.1.2
Instrumentation (PGA)	2.11.2.2.5
Instrumentation Subsystem	
Functional Description	2.9.3
Interface	2.9.2
Introduction	2.9.1
Major Component/Functional Description	2.9.4
Operational Limitations and Restrictions	2.9.6
Performance and Design Data	2.9.5
Integrally Lighted Components	2.10.2.2.1
Integrated Thermal Micrometeoroid Garment	2.11.2.4
Interior Lighting	2.10.12.2
Internal Power Interface	2.5.2.2
Interstage Structural Connections	2.8.4.1.2

ALPHABETICAL INDEX (cont)

	Paragraph
Interstage Umbilical Cutters (Guillotine)	2.8.4.1.3
Intravehicular Gloves	2.11.2.2.3
Introduction	
Communications Subsystem	2.7.1
Crew Personal Equipment	2.11.1
Electrical Power Subsystem	2.5.1
Environmental Control Subsystem	2.6.1
Explosive Devices Subsystem	2.8.1
Guidance, Navigation and Control Subsystem	2.1.1
Instrumentation Subsystem	2.9.1
Lighting	2.10.1
Main Propulsion Subsystem	2.3.1
Radar Subsystem	2.2.1
Reaction Control Subsystem	2.4.1
INVERTER Caution Light	2.9.4.4.14
Inverters	2.5.4.8
ISS Warning Light	2.9.4.4.25
Ladder	1.3.2.2.7
Lamp and Tone Test	2.10.2.2.7
Landing Gear	1.3.2.2
Landing Gear Deployment	2.8.3.3
Landing Gear Uplock and Cutter Assemblies	2.8.4.1.4
Landing Radar	
Functional Description	2.2.3.3
Introduction	2.2.1.2
Major Component/Functional Description	2.2.4.3
LGC Control Mode	2.2.3.1.1
LGC Warning Light	2.9.4.4.24
Lighting	
Functional Description	2.10.2
Introduction	2.10.1
Operational Limitations and Restrictions	2.10.4
Performance and Design Data	2.10.3
Liquid Cooling Garment	2.11.2.1
Liquid Transport Loop	2.11.2.5.4
LM Communication Relay Unit	2.11.12
LM Configuration	1.1
LM Guidance Computer	2.1.4.3.1
LM Vehicle, Guidance, Navigation and Control Subsystem Axes	2.1.1.5
LM-CSM Interfaces	1.5
LM-SLA-S-IVB Connections	1.4
Lunar Contact Lights	2.10.2.2.2
Lunar Extravehicular Visor Assembly	2.11.2.4.3
Lunar Orbit - CSM/LM Power	2.5.3.5.3
Lunar-Surface Sensing Probe	1.3.2.2.6
Main Propulsion Subsystem (See Ascent Propulsion Section - Descent Propulsion Section)	2.3
Major Component/Functional Description	
Ascent Propulsion Section	2.3.9
Communications Subsystem	2.7.4
Descent Propulsion Section	2.3.4
Electrical Power Subsystem	2.5.4
Environmental Control Subsystem	2.6.4
Explosive Devices Subsystem	2.8.4
Guidance, Navigation, and Control Subsystem	2.1.4
Instrumentation Subsystem	2.9.4
Radar Subsystem	2.2.4
Reaction Control Subsystem	2.4.4
Malfunctioning-Battery Isolation Circuitry	2.5.3.4.4
Manual Operation of DSKY	2.1.4.3.3
MASTER ALARM Pushbutton/Lights and C/W PWR Caution Light	2.9.4.4.1
Medical Equipment	2.11.4.5

ALPHABETICAL INDEX (cont)

	Paragraph
Middle Gimbal Assembly	2.1.4.1.2
Midsection	1.2.2.2
Modes of Operation, RR	2.2.3.1.1
Modes of Operation, RR Transponder	2.2.3.2.1
Moding	2.1.4.1.3
Modularized Equipment Stowage Assembly	2.11.8
O_2 QTY Caution Light	2.9.4.4.6
Operational Limitations and Restrictions	
Ascent Propulsion Section	2.3.11
Communications Subsystem	2.7.6
Descent Propulsion Subsystem	2.3.6
Electrical Power Subsystem	2.5.6
Environmental Control Subsystem	2.6.6
Explosive Devices Subsystem	2.8.6
Guidance, Navigation, and Control Subsystem	2.1.6
Instrumentation Subsystem	2.9.6
Lighting	2.10.4
Radar Subsystem	2.2.6
Reaction Control Subsystem	2.4.6
OPS Battery	2.11.2.6.3
OPS Instrumentation	2.11.2.6.5
OPS Oxygen Bottles	2.11.2.6.1
OPS Oxygen Connectors	2.11.2.6.4
OPS Oxygen Pressure Regulator Assembly	2.11.2.6.2
Optical Sight Reticle Light	2.10.2.2.5
Optical Subsection Operation	2.1.4.2.3
Orbital Rate Display - Earth and Lunar	
Introduction	2.1.1.4
Major Component/Functional Description	2.1.4.6
ORDEAL Power Distribution	2.1.3.6.4
Oscillator Failure-Detection Circuits No. 1, 2, and 3	2.9.4.3.10
Outer Gimbal Assembly	2.1.4.1.2
Output Register and Data Transfer Buffers	2.9.4.3.7
Overhead Hatch	1.2.2.2.2
Oxygen Control Module	2.6.4.2.5
Oxygen Filters	2.6.4.2.4
Oxygen Purge System	2.11.2.6
Oxygen Supply and Cabin Pressure Control Section	
Functional Description	2.6.3.2
Introduction	2.6.1.2
Major Component/Functional Description	2.6.4.2
Oxygen Umbilical	2.11.3.1
Oxygen Ventilation Loop (PLSS)	2.11.2.5.2
Performance and Design Data	
Ascent Propulsion Section	2.3.10
Communications Subsystem	2.7.5
Descent Propulsion Section	2.3.5
Electrical Power Subsystem	2.5.5
Environmental Control Subsystem	2.6.5
Explosive Devices Subsystem	2.8.5
Guidance, Navigation, and Control Subsystem	2.1.5
Instrumentation Subsystem	2.9.5
Lighting	2.10.3
Radar Subsystem	2.2.5
Reaction Control Subsystem	2.4.5
Personal Hygiene Items	2.11.4.4
Personal Radiation Dosimeters	2.11.4.5.2
PGNS Power Distribution	2.1.3.6.1
Phase-Locked Oscillator and Doubler	2.9.4.3.9
Phase-Sensitive Demodulators	2.9.4.2.8
Pilot Valves and Shutoff Valve Actuators	2.3.4.11.1

ALPHABETICAL INDEX (cont)

	Paragraph
Platform	1.3.2.3
PLSS Condensate Transfer	2.11.2.6.6
PLSS Remote Control Unit	2.11.2.5.7
Portable Utility Lights	2.10.2.2.4
Portable Life Support System	2.11.2.5
Power and Servo Assembly	2.1.4.1.5
Power Distribution	
Communications Subsystem	2.7.3.2
Guidance, Navigation, and Control Subsystem	2.1.3.6
Power Monitoring	2.5.3.4
Power Supply (PCMTEA)	2.9.4.3.8
Power Supply (DSEA)	2.9.4.5.1
PRE AMPS Caution Light	2.9.4.4.22
Pressure Garment Assembly	2.11.2.1
Pressurization Section (APS)	2.3.8.1
Pressurization Section (DPS)	2.3.3.1
Primary Bus Voltage-Monitoring Circuits	2.5.3.4.3
Primary Coolant Loop	2.6.3.4.1
Primary Guidance and Navigation Section	
Computer Subsection	2.1.4.3
Inertial Subsection	2.1.4.1
Introduction	2.1.1.1
Major Component/Functional Description	2.1.4
Modes of Operation	2.1.4.3.5
Optical Subsection	2.1.4.2
Primary Oxygen Subsystem (PLSS)	2.11.2.5.1
Primary Strut	1.3.2.2.1
Probe Assembly	2.11.6.5
Programmer	2.9.4.3.5
Propellant Feed Section (APS)	2.3.8.2
Propellant Feed Section (DPS)	2.3.3.2
Propellant Quantity Gaging System (DPS)	2.3.3.2.1
Propellant Quantity Measuring Device	2.4.3.3
Propellant Shutoff Valve Assemblies	2.3.4.11
Propellant Section (RCS)	2.4.3.2
Propellant Storage Tanks (APS)	2.3.9.5
Propellant Storage Tanks (DPS)	2.3.4.8
Pulse Integrating Pendulous Accelerometer	2.1.4.1.2
Pulse Mode	2.1.3.5.1
Pulse Torque Assembly	2.1.4.1.4
Pulse-Code-Modulation and Timing Electronics Assembly	2.9.4.3
Radar Power Distribution	2.2.3.4
Radar Subsystem	
Functional Description	2.2.3
Interfaces	2.2.2
Introduction	2.2.1
Major Component/Functional Description	2.2.4
Operational Limitations and Restrictions	2.2.6
Performance and Design Data	2.2.5
Ranging and Tracking	2.7.3.5
Ranging Tone Transfer Assembly	2.7.4.2.3
Rate Gyro Assembly	2.1.4.5.4
RCS A REG and RCS B REG Warning Lights	2.9.4.4.8
RCS Caution Light	2.9.4.4.9
RCS Propellant Tank Pressurization	2.8.3.7
RCS TCA Warning Light	2.9.4.4.12
Reaction Control Subsystem	
Functional Description	2.4.3
Interfaces	2.4.2
Introduction	2.4.1
Major Component/Functional Description	2.4.4
Operational Limitations and Restrictions	2.4.6
Performance and Design Data	2.4.5

ALPHABETICAL INDEX (cont)

	Paragraph
Relay Junction Box	2.5.4.6
Relief Valve Assemblies (APS)	2.3.9.4
Relief Valve Assemblies (DPS)	2.3.4.6
Relief Valve Assemblies (RCS)	2.4.4.3
Rendezvous Radar	
Functional Description	2.2.3.1
Major Component/Functional Description	2.2.4.1
Rendezvous Radar and Transponder	2.2.1.1
Rendezvous Radar Transponder	
Functional Description	2.2.3.1
Major Component/Functional Description	2.2.4.1
Resistance-to-DC Converters	2.9.4.3.7
Restraint Assembly	2.11.5.3
RF Electronic Equipment	2.7.4.1
RNDZ RDR Caution Light	2.9.4.4.26
S-Band Erectable Antenna	2.11.11
S-Band Diplexer and RF Selector Switch	2.7.4.3.4
S-Band In-Flight Antennas	2.7.4.3.1
S-Band Power Amplifier	2.7.4.1.2
S-Band Steerable Antenna	2.7.4.3.2
S-Band Transmitter-Receiver Assembly	2.7.4.1.1
S-BD RCVR Caution Light	2.9.4.4.29
S&C Control Assemblies	2.1.4.5.8
Secondary Coolant Loop	2.6.3.4.2
Secondary Struts	1.3.2.2.3
Sensing Equipment	2.9.4.1
Sensor Power Fuse Assemblies	2.5.4.10
Signal Conditioner Assembly	2.1.4.1.6
Signal-Conditioning Electronics Assembly	2.9.4.2
Signal-Processor Assembly	2.7.4.2.1
Signal Processing Equipment	2.7.4.2
Signal Processing (LR)	2.2.3.3.1
Slew Mode (RR)	2.2.3.1.1
STAGE SEQ RELAYS SYS A and SYS B Component Caution Lights	2.8.3.2.1
Staging	2.8.3.5
Staging - Normal or Abort	2.5.3.5.6
Stowage Locations	2.11.9
Stowage Provisions	1.6
Sublimators	2.6.4.4.5
Subsystem Operation (CS)	2.7.3.6
Suit Circuit Assembly	2.6.4.1.1
Suit Liquid Cooling Assembly	
Functional Description	2.6.3.1.1
Major Component/Functional Description	2.6.4.1.2
Suit Temperature Control Valve	2.6.4.4.4
SUIT/FAN Warning Light	2.9.4.4.7
TCA Cluster Supports	1.2.2.4
Thermal and Micrometeoroid Shield, Ascent Stage	1.2.2.6
Thermal and Micrometeoroid Shield, Descent Stage	1.3.2.1
Throttle Control	2.1.3.5.3
Throttle Valve Actuator	2.3.4.9
Thrust Chamber Assemblies	
Functional Description	2.4.3.4
Major Component/Functional Description	2.4.4.5
Thrust Chamber Assembly Failure-Detection System	2.4.3.4.1
Thrust/Translation Controller Assemblies	2.1.4.5.2
Time Accumulator and Serial Time Code Generator	2.9.4.3.13
Timing Generator	2.9.4.3.12
Tool B	2.11.7.2
Torso and Limb Suit	2.11.2.2.1
Tracking Light	2.10.2.1.2

ALPHABETICAL INDEX (cont)

	Paragraph
Translation Control	2.1.3.5.2
Trim Control	2.1.3.5.3
Tunnel Hardware	2.11.6.4
Umbilical	1.5.1.2
Umbilical Assembly	2.11.3
Uplock Assembly	2.3.2.2.4
Valve Package Assembly	2.3.9.6
Variable-Area Injector	2.3.4.12
VHF Diplexer and RF Selector Switch	2.7.4.3.7
VHF Equipment	2.7.4.1.3
VHF EVA Antenna	2.7.4.3.6
VHF In-Flight Antennas	2.7.4.3.5
Voice Operation	2.7.3.3
Waste Fluid Transfer	2.11.4.3.1
Water Control Module	2.6.4.3.4
Water Management Section	
Functional Description	2.6.3.3
Introduction	2.6.1.3
Major Component/Functional Description	2.6.4.3
Water Quantity Measuring Device	2.6.4.3.3
Window Shades	2.11.7.3
Windows	1.2.2.1.3

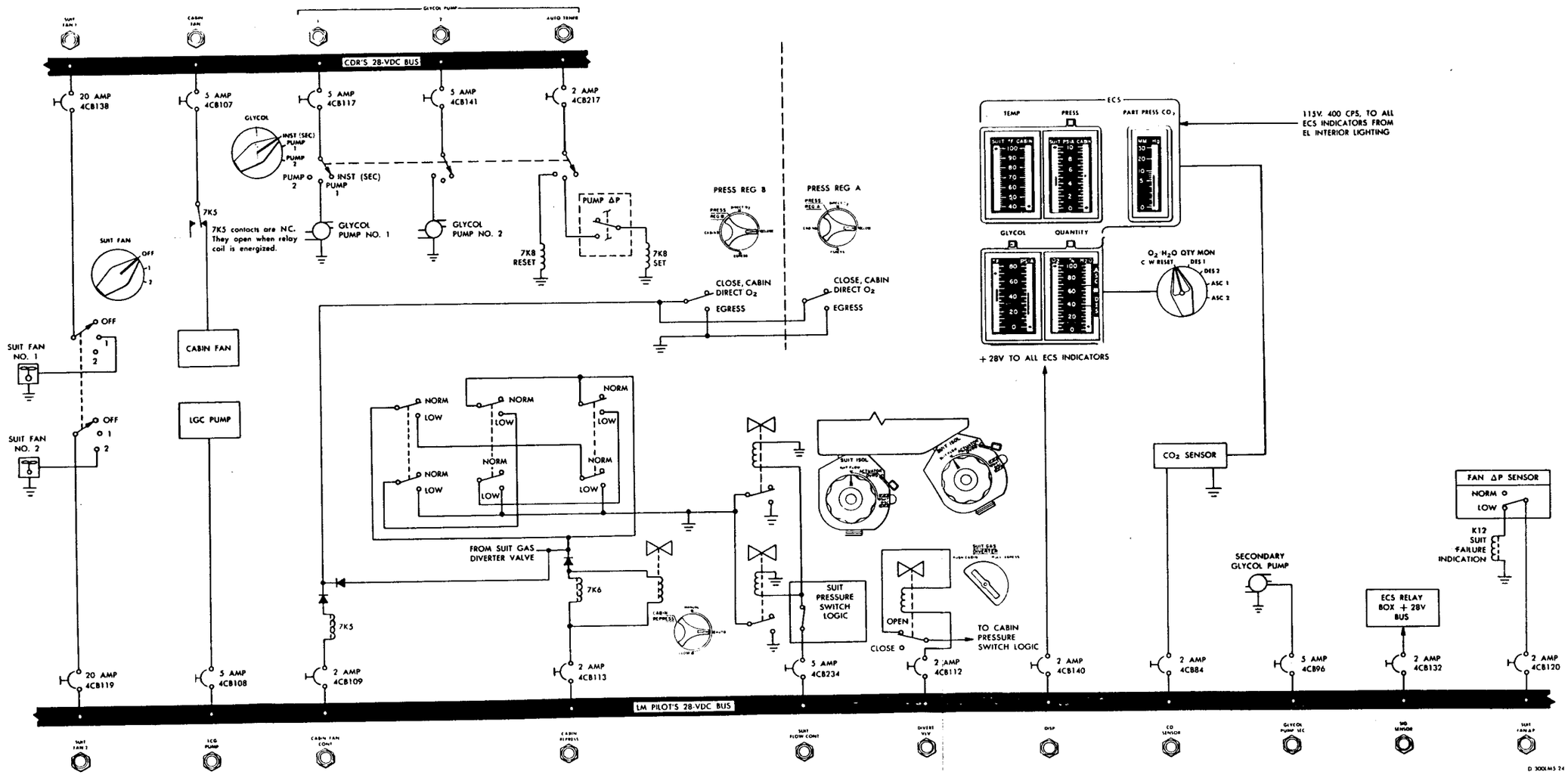

Figure 2.6-3. Environmental Control Subsystem - Power Distribution Diagram

ECS

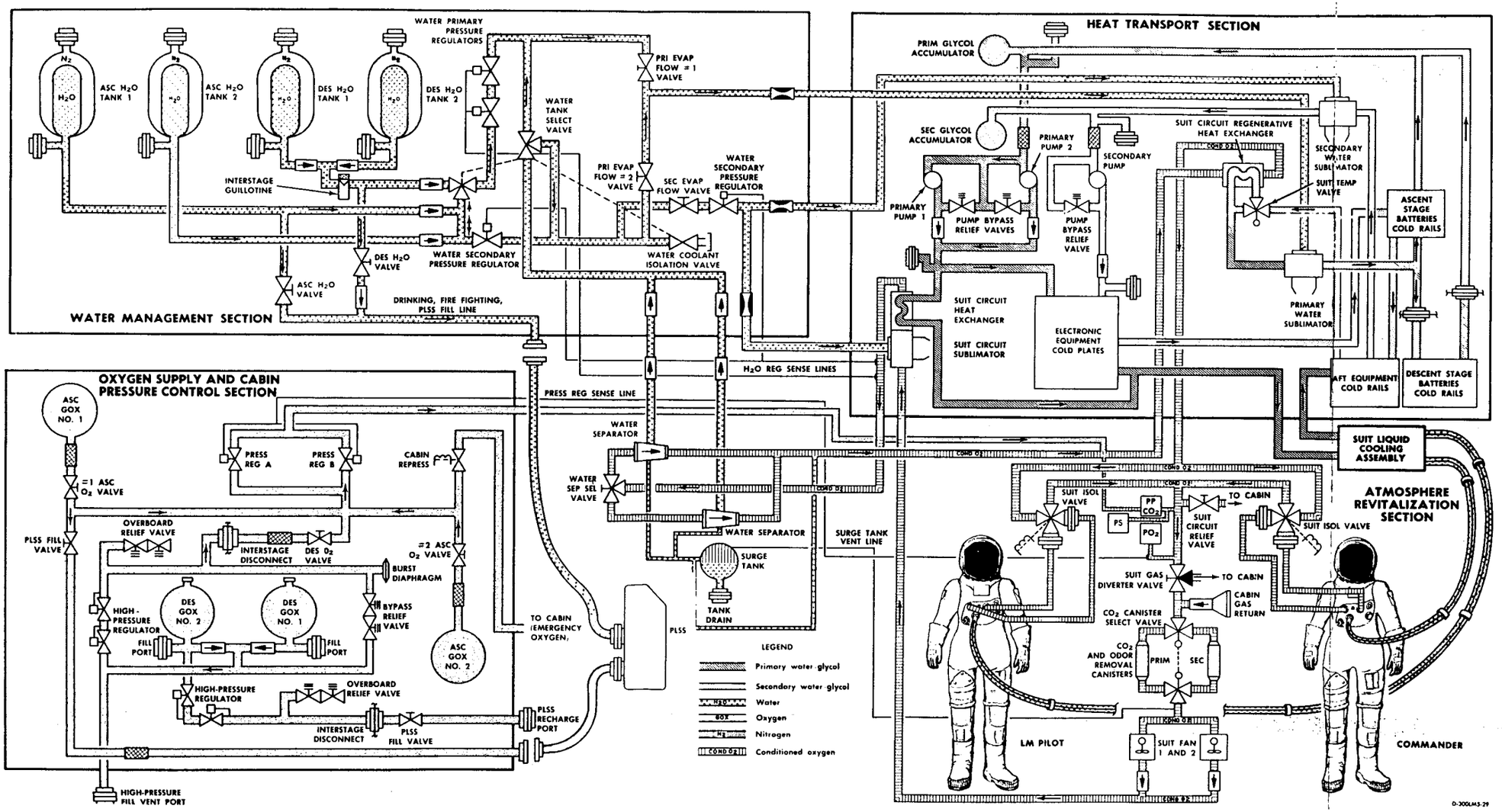

Figure 2.6-4. Environmental Control Subsystem - Functional Flow Diagram

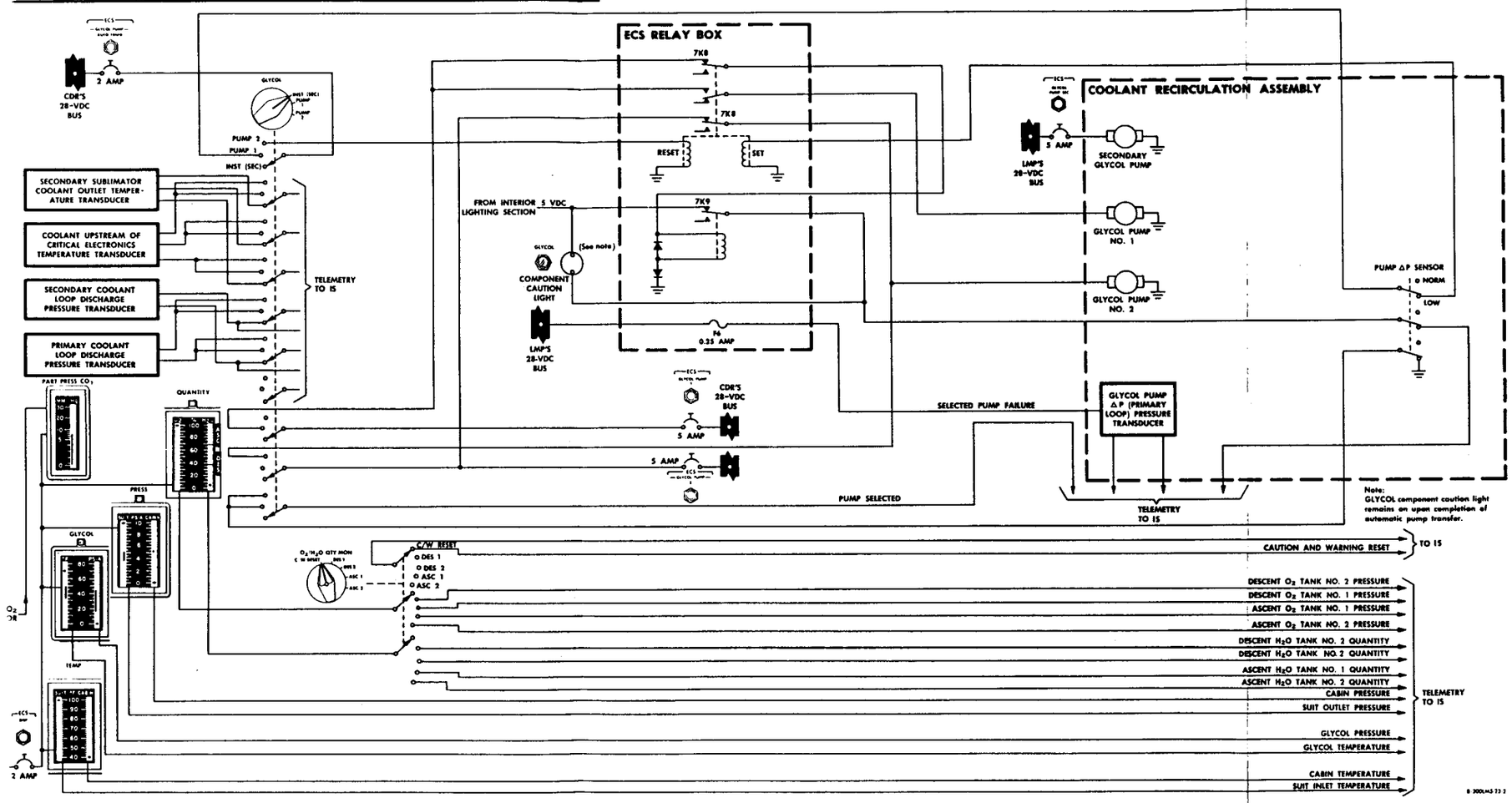

Figure 2.6-5. Environmental Control Subsystem - Electrical Schematic Diagram (Sheet 2 of 2)

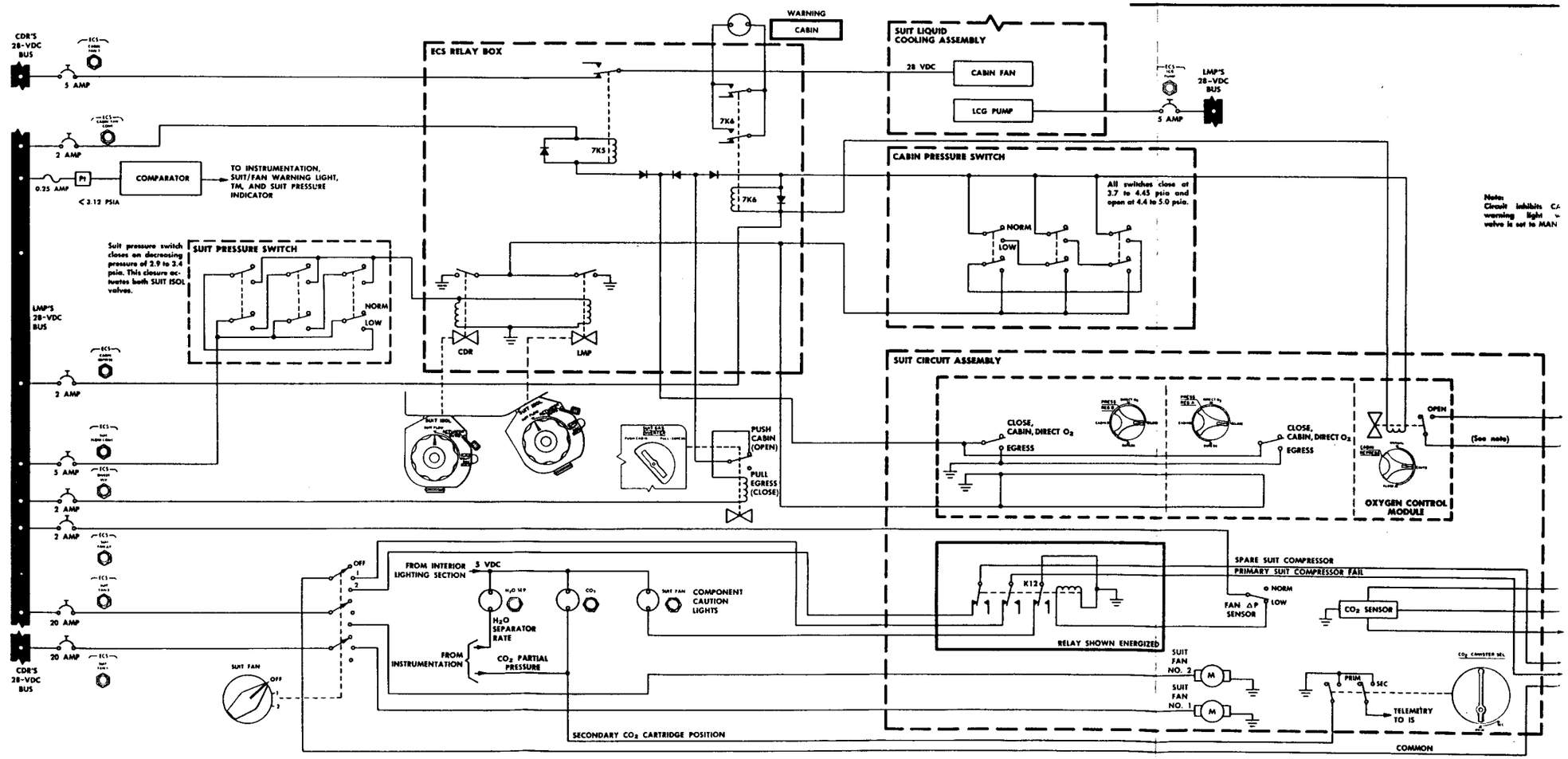

Figure 2.6-5. Environmental Control Subsystem - Electrical Schema

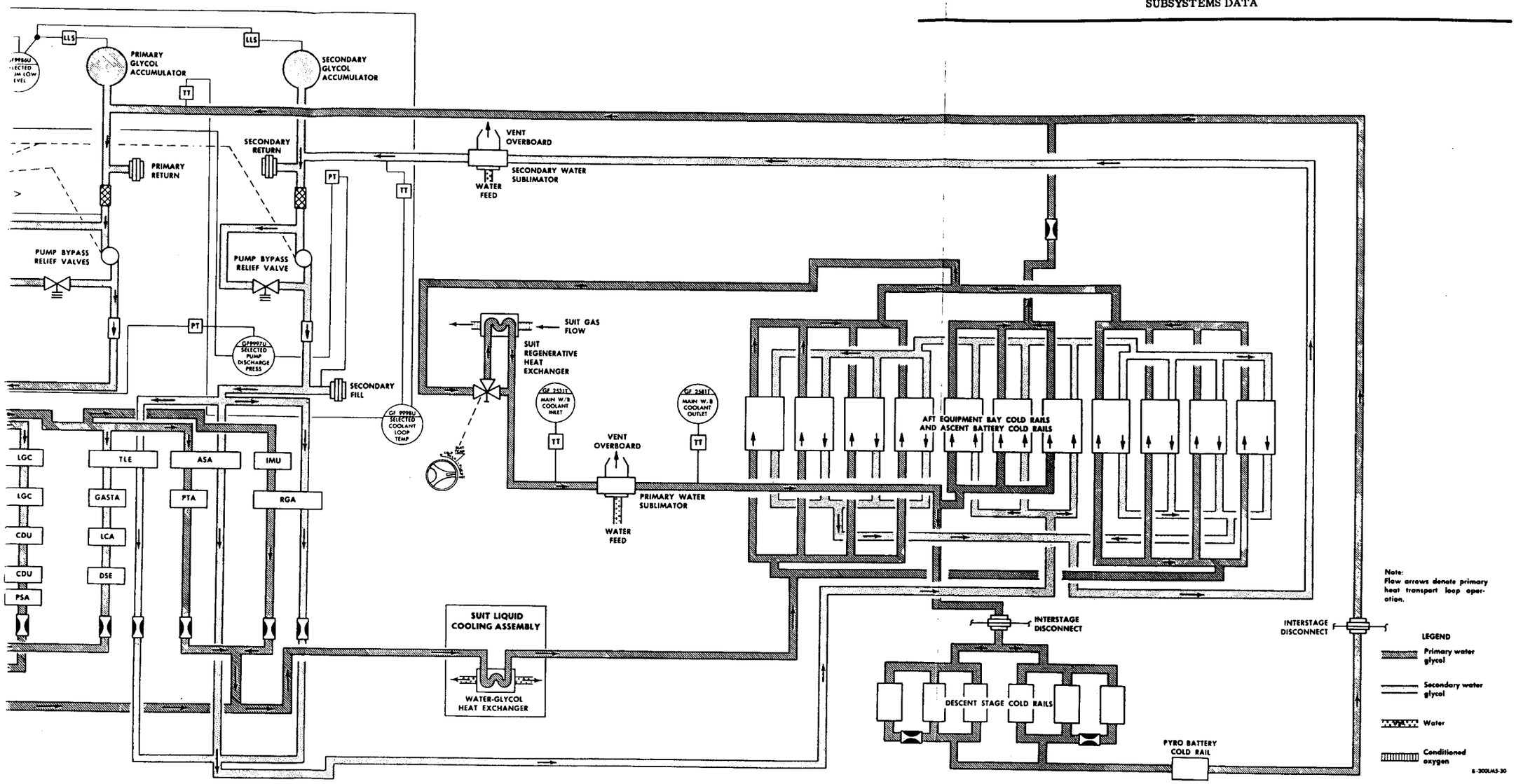

Figure 2.6-9. Heat Transport Section - Simplified Functional Flow Diagram

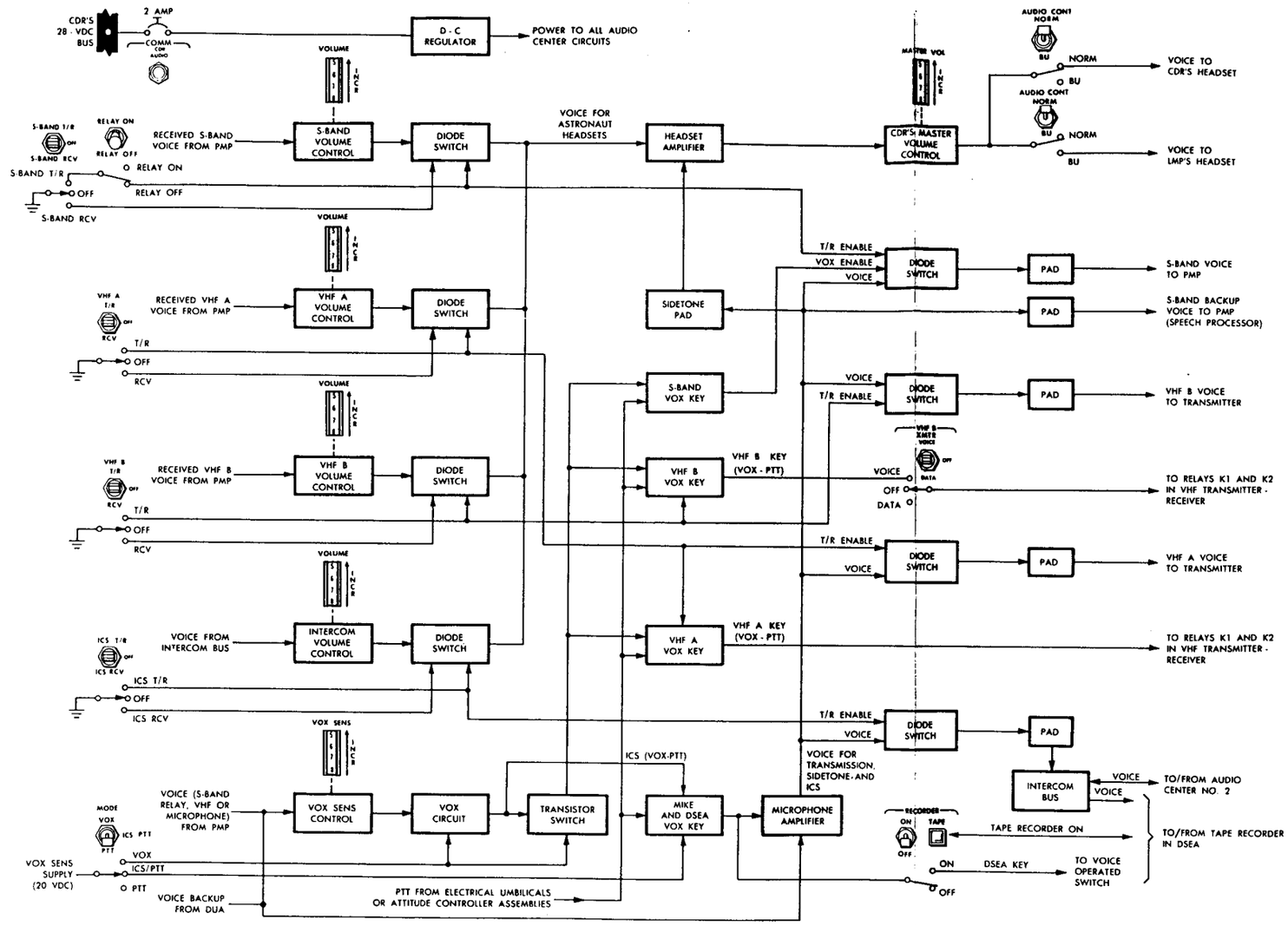

Figure 2.7-15. Audio Center No. 1 - Block Diagram

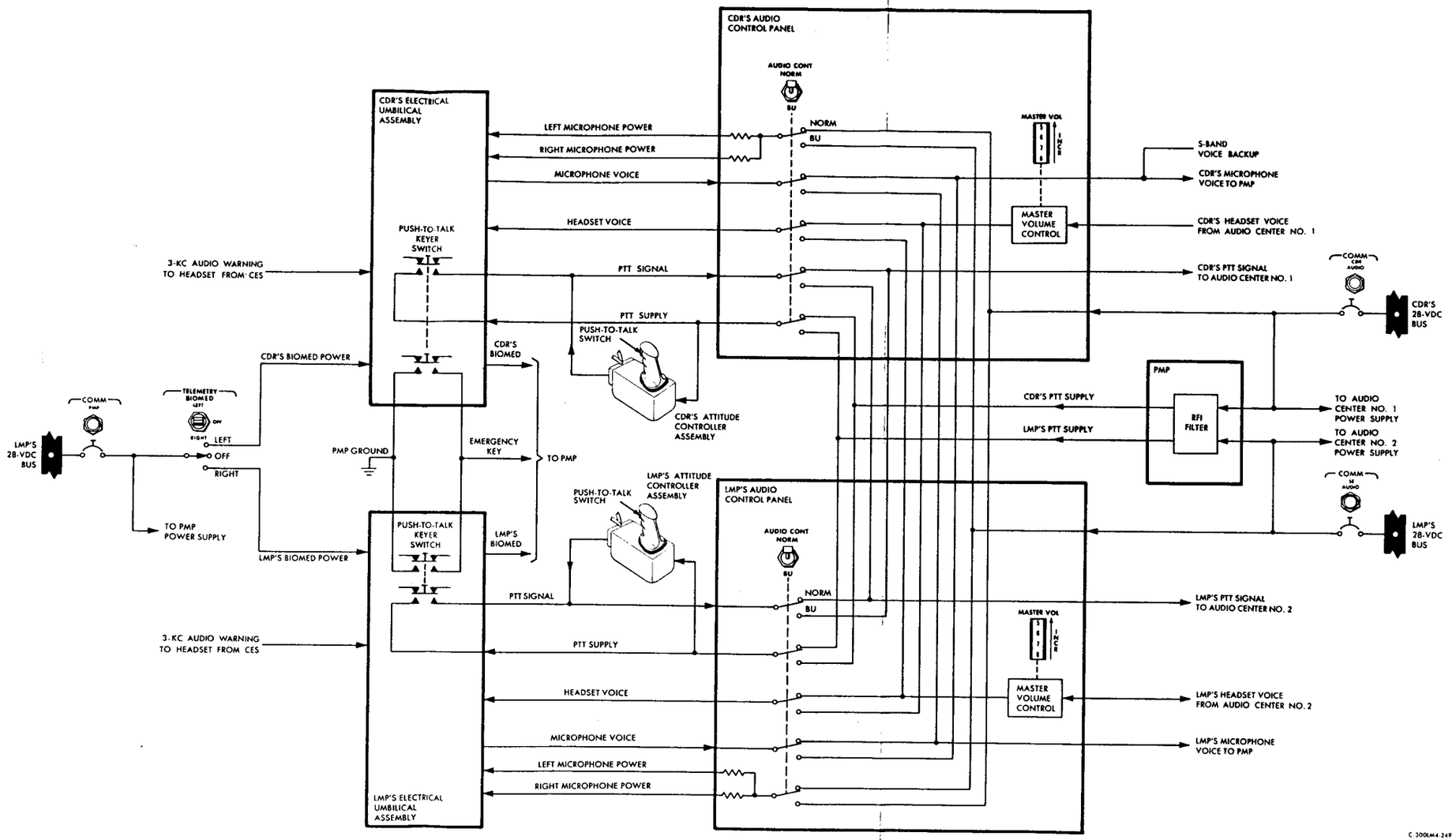

Figure 2-7-16. Audio Control Circuits - Simplified Block Diagram

Notes:
1. The remaining contacts of the ABORT STAGE switch route the signal to the CES. The CES routes a stage command back to the EDS.
2. This signal bypasses the ASCENT He PRESS switch and the MASTER ARM switch; it is routed to relays K10, K11, and K12 through the ASC He SEL switch, for automatic ascent propellant pressurization. (See figure 2.8-10)

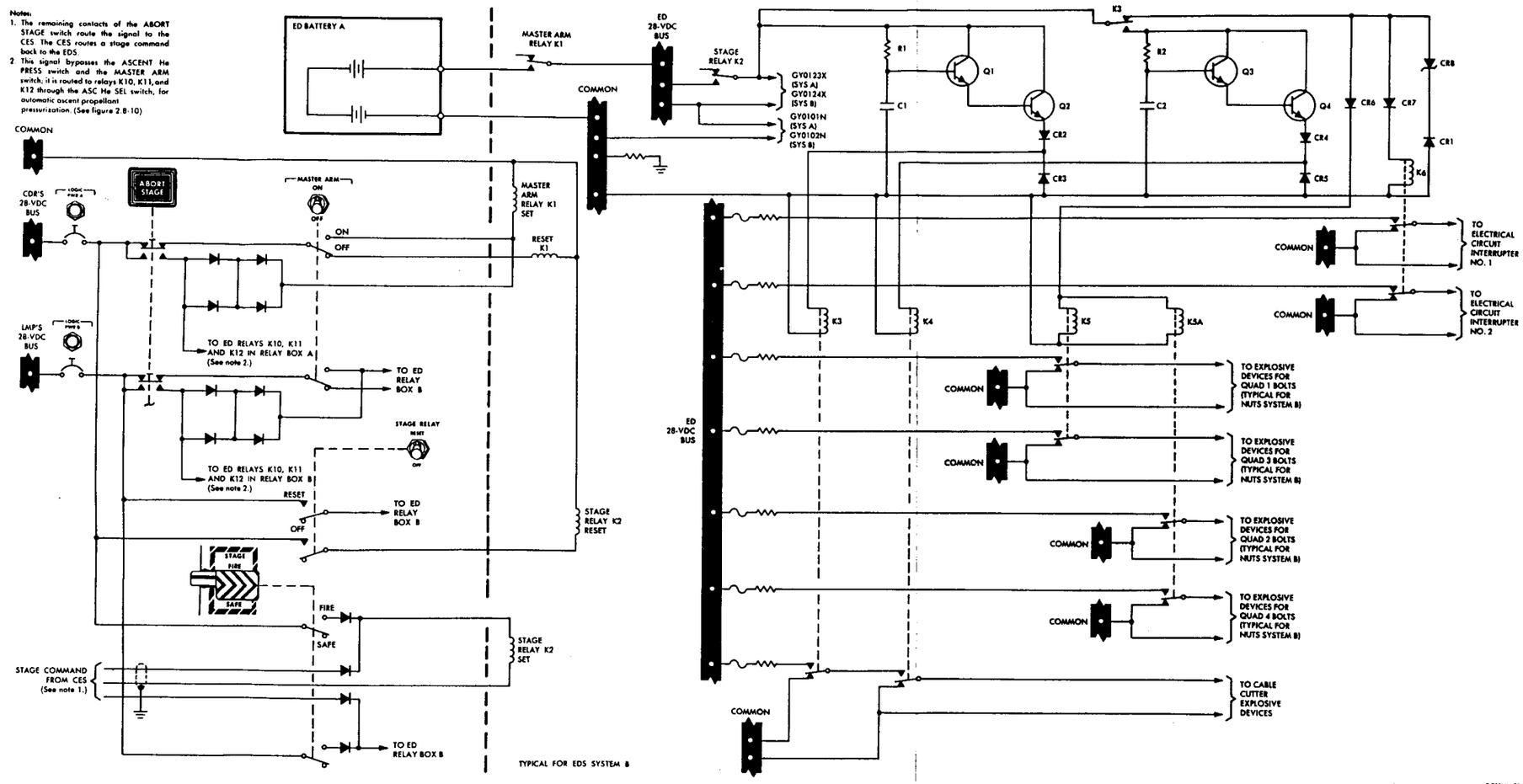

Figure 2.8-9. Stage Sequence - Simplified Schematic Diagram

ED

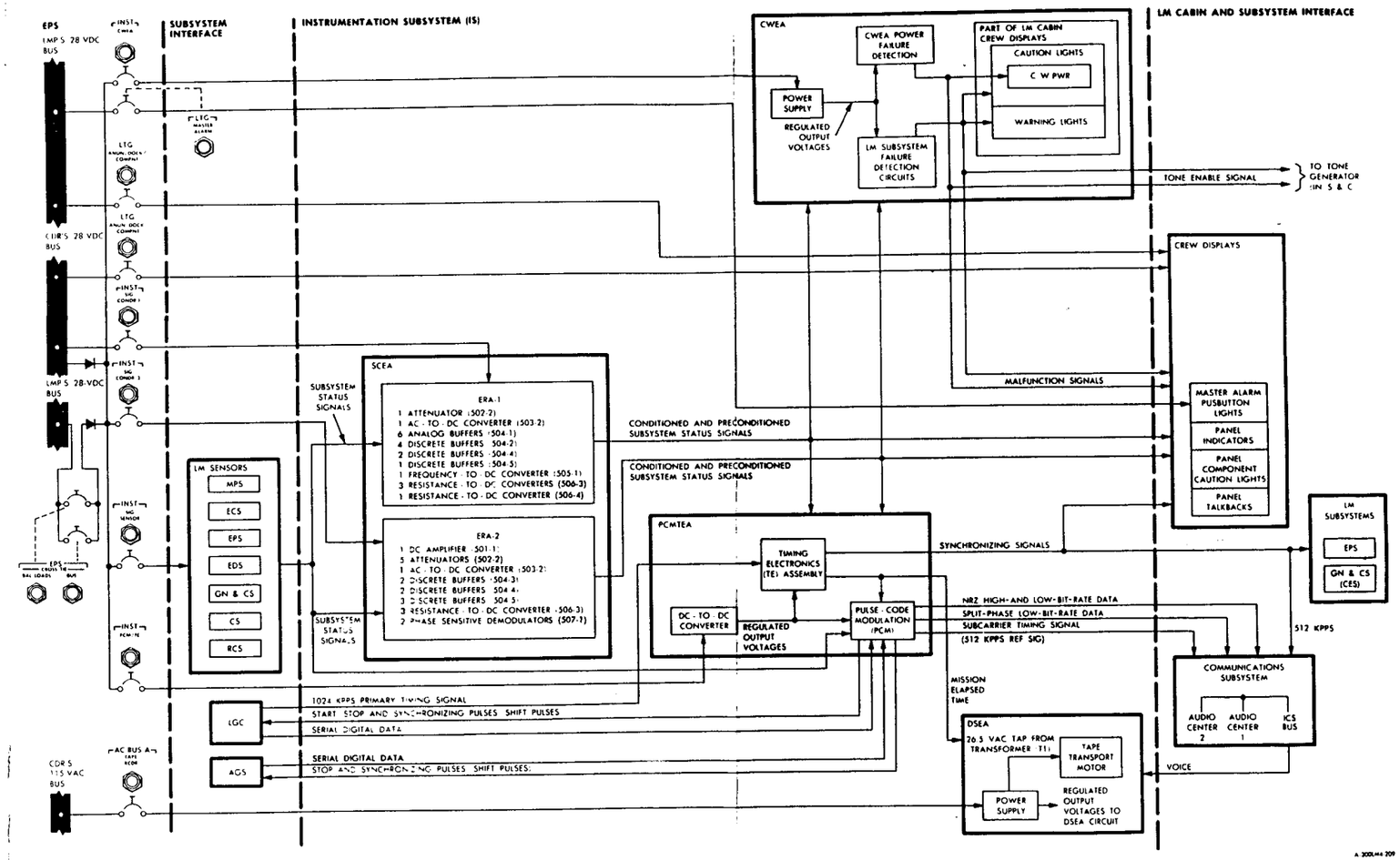

Figure 2.9-1. Instrumentation Power Distribution and Interfacing - Overall Functional Block Diagram

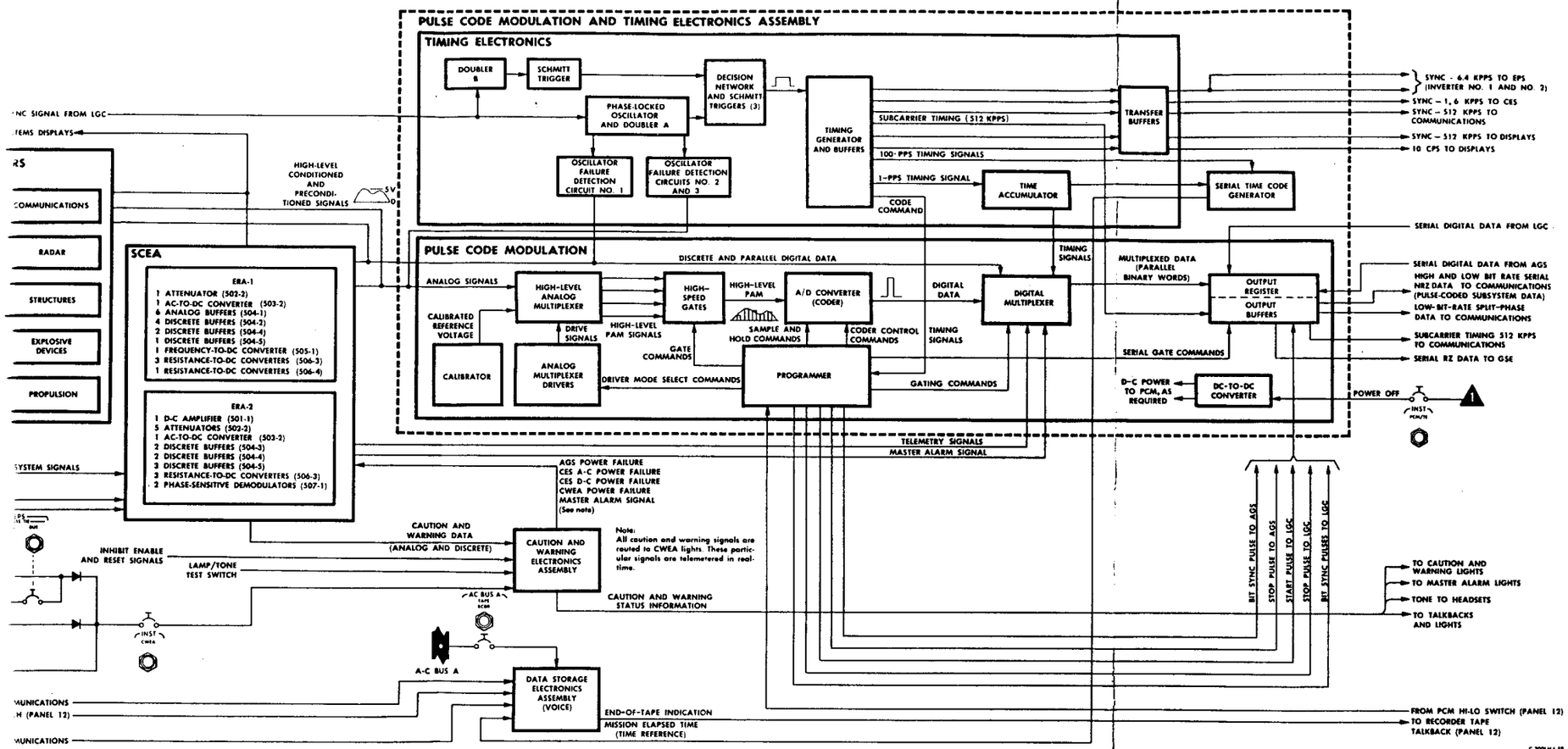

trumentation Subsystem - Overall Functional Block Diagram

INSTRUMENTATION SUBSYSTEM

LM Basic Date 1 February 1970 Change Date

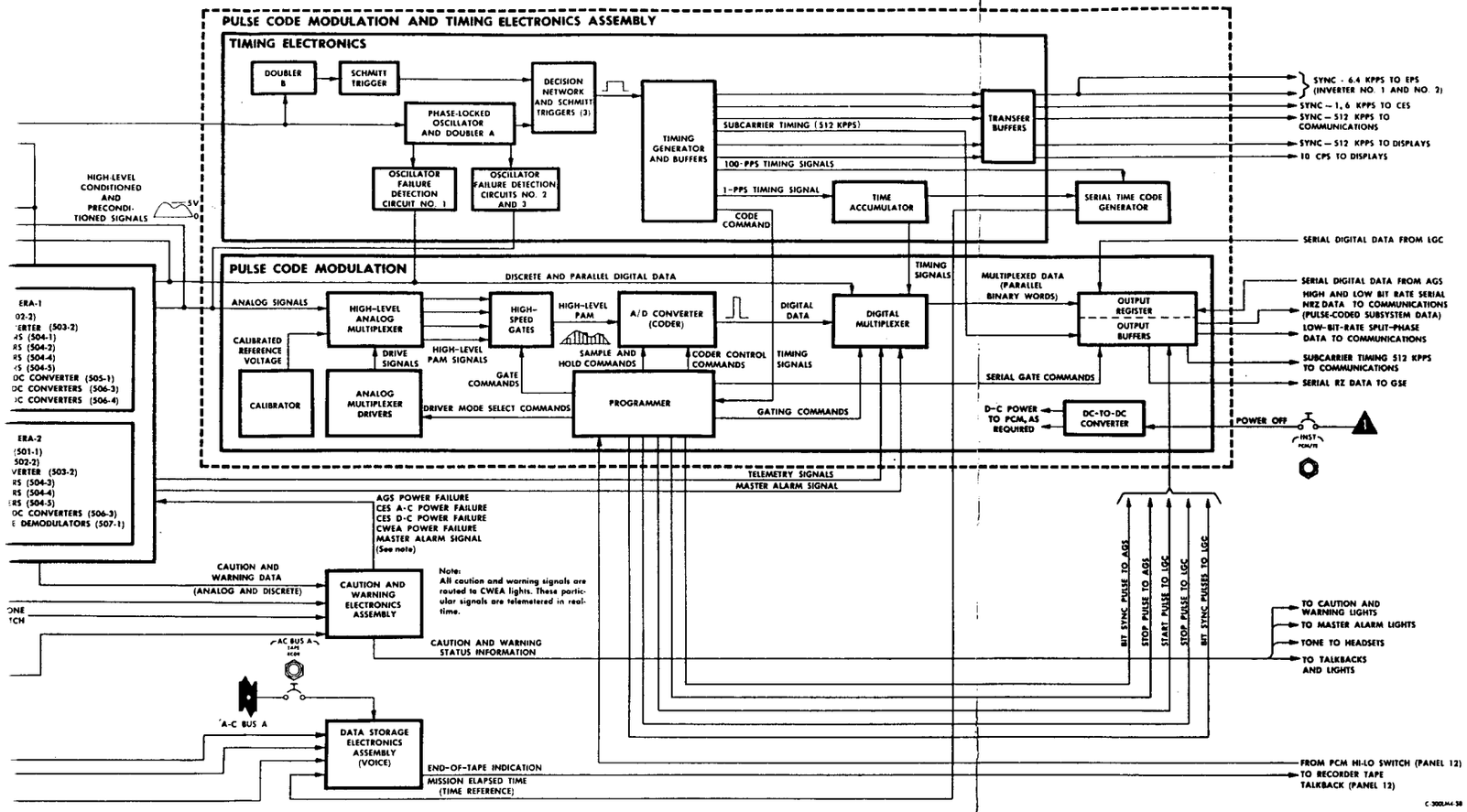

Functional Block Diagram

)___Change Date _____

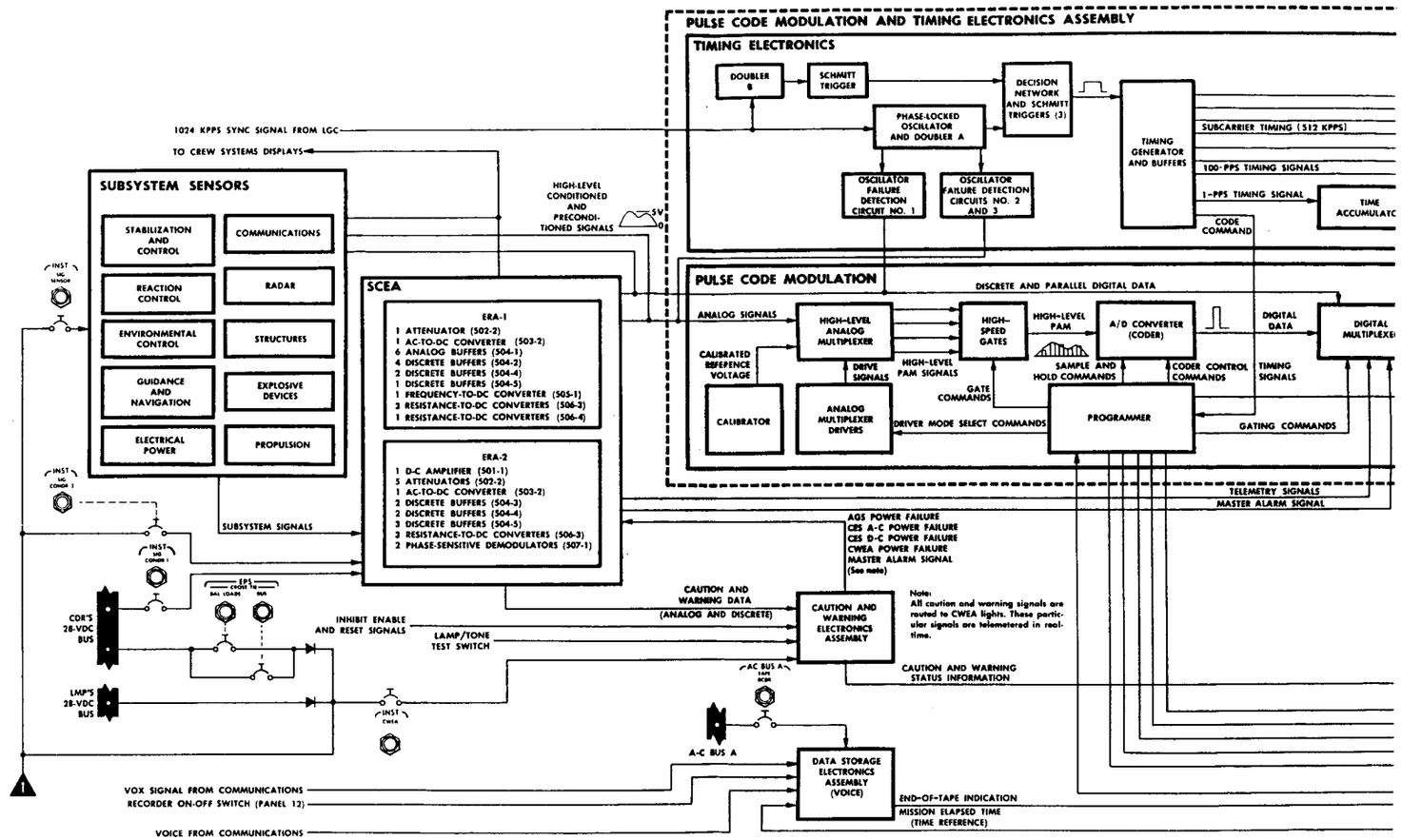

Figure 2.9-2. Instrumentation Subsystem - Overall Functional Block Diagram

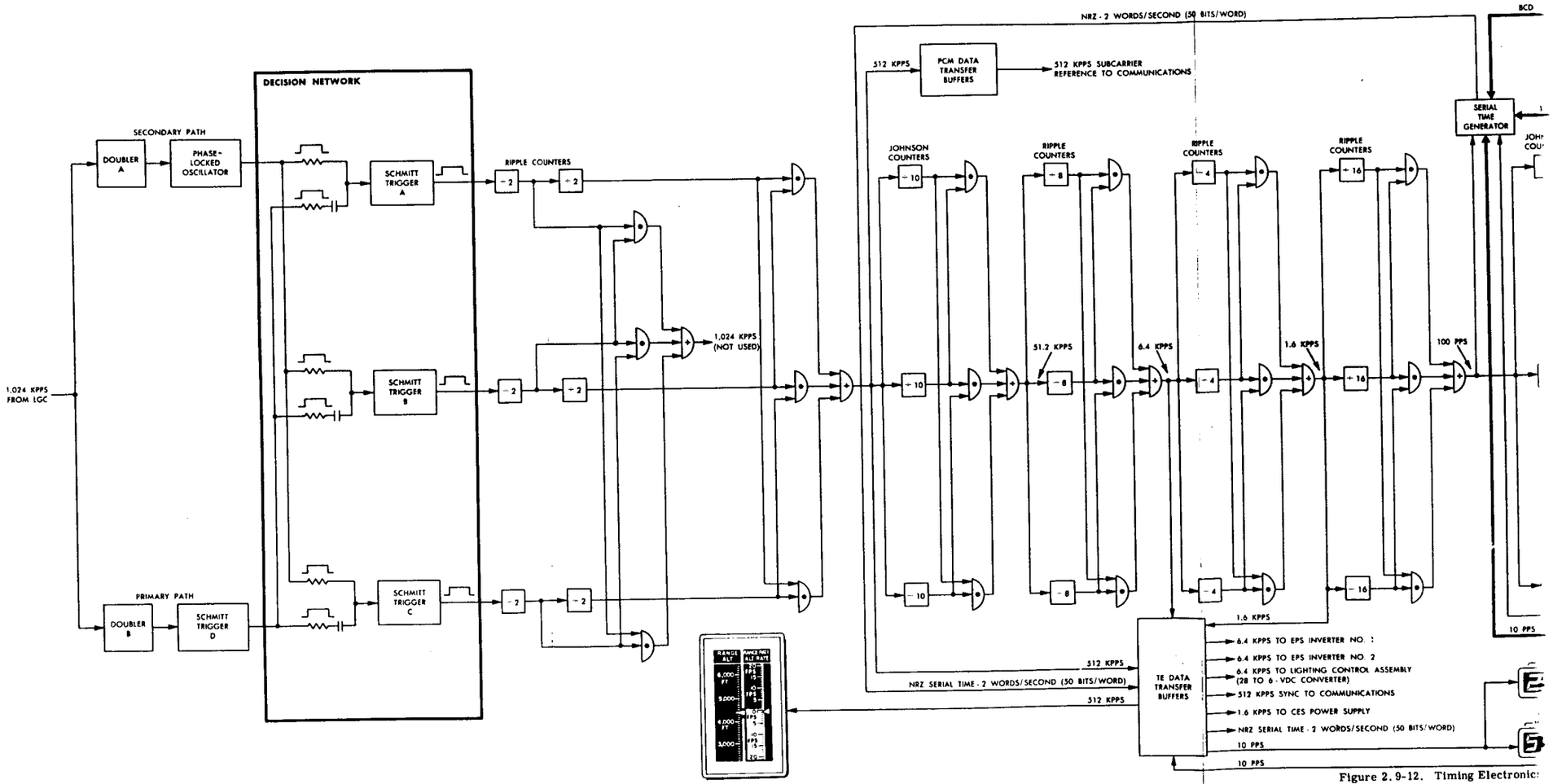

Figure 2.9-12. Timing Electronic:

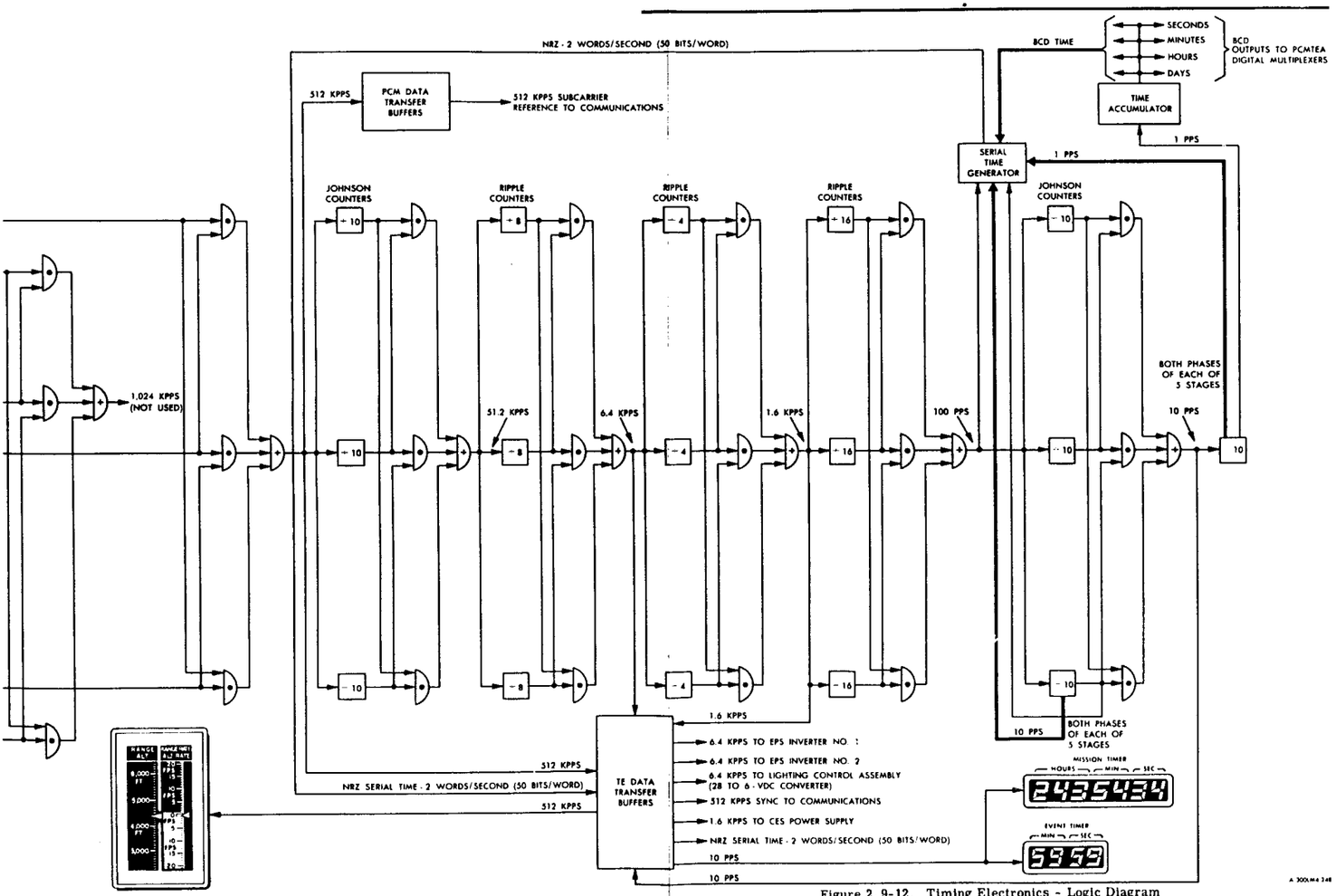

Figure 2.9-12. Timing Electronics - Logic Diagram

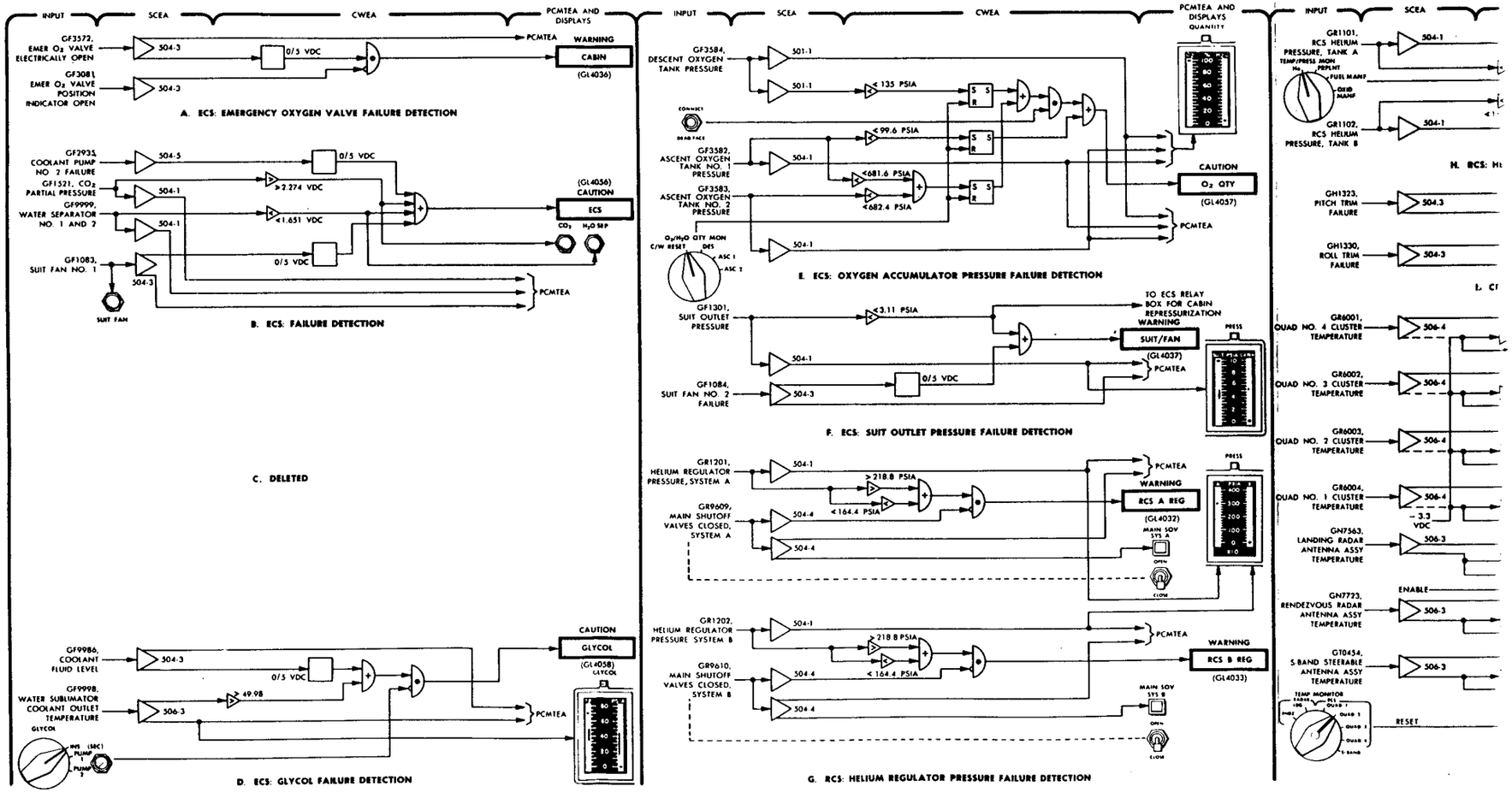

Figure 2.9-15. CWEA Fa

Mission LM Basic Date 1 Fe

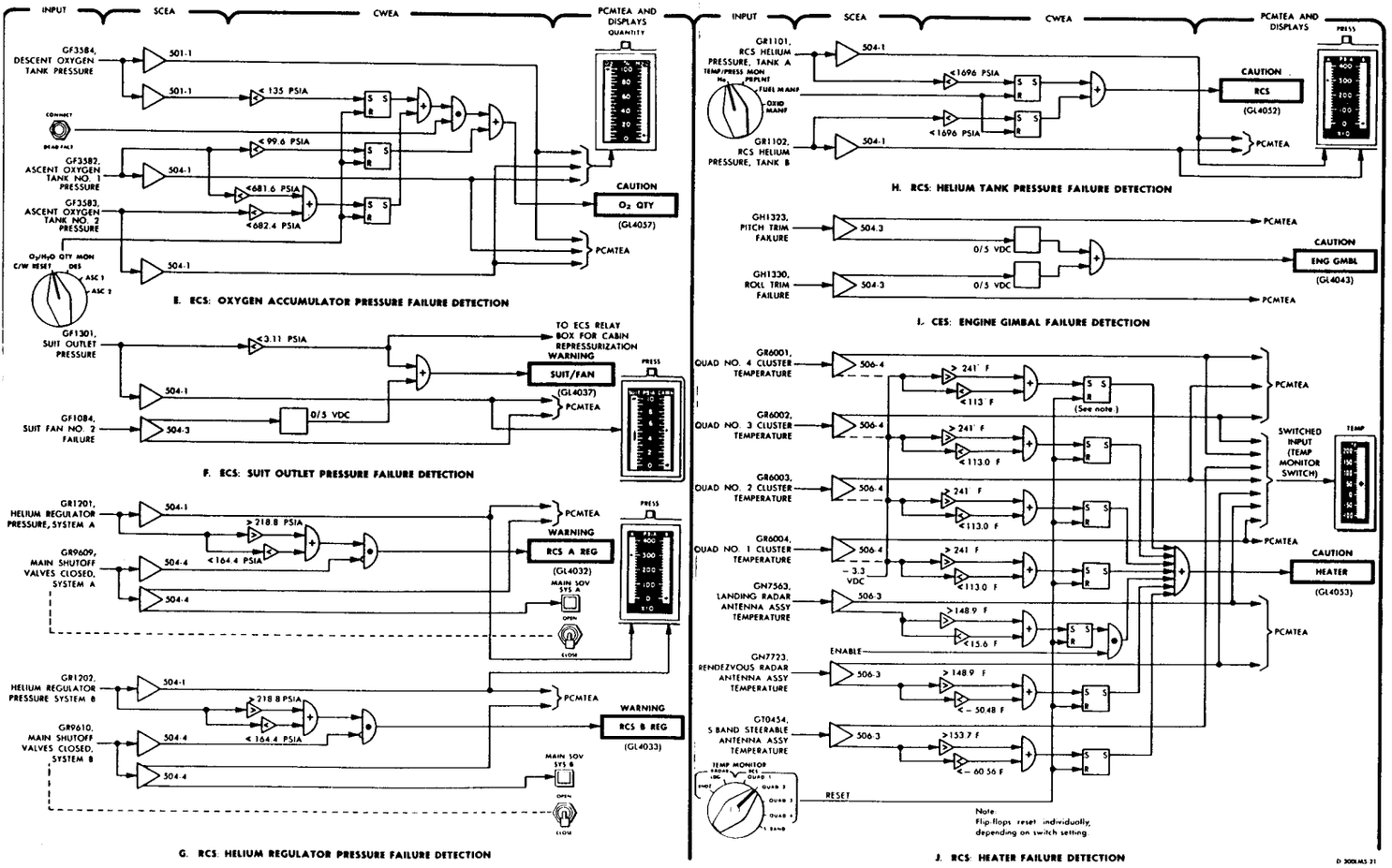

Figure 2.9-15. CWEA Failure Detection Circuits - Logic Diagram (Sheet 1 of 3)

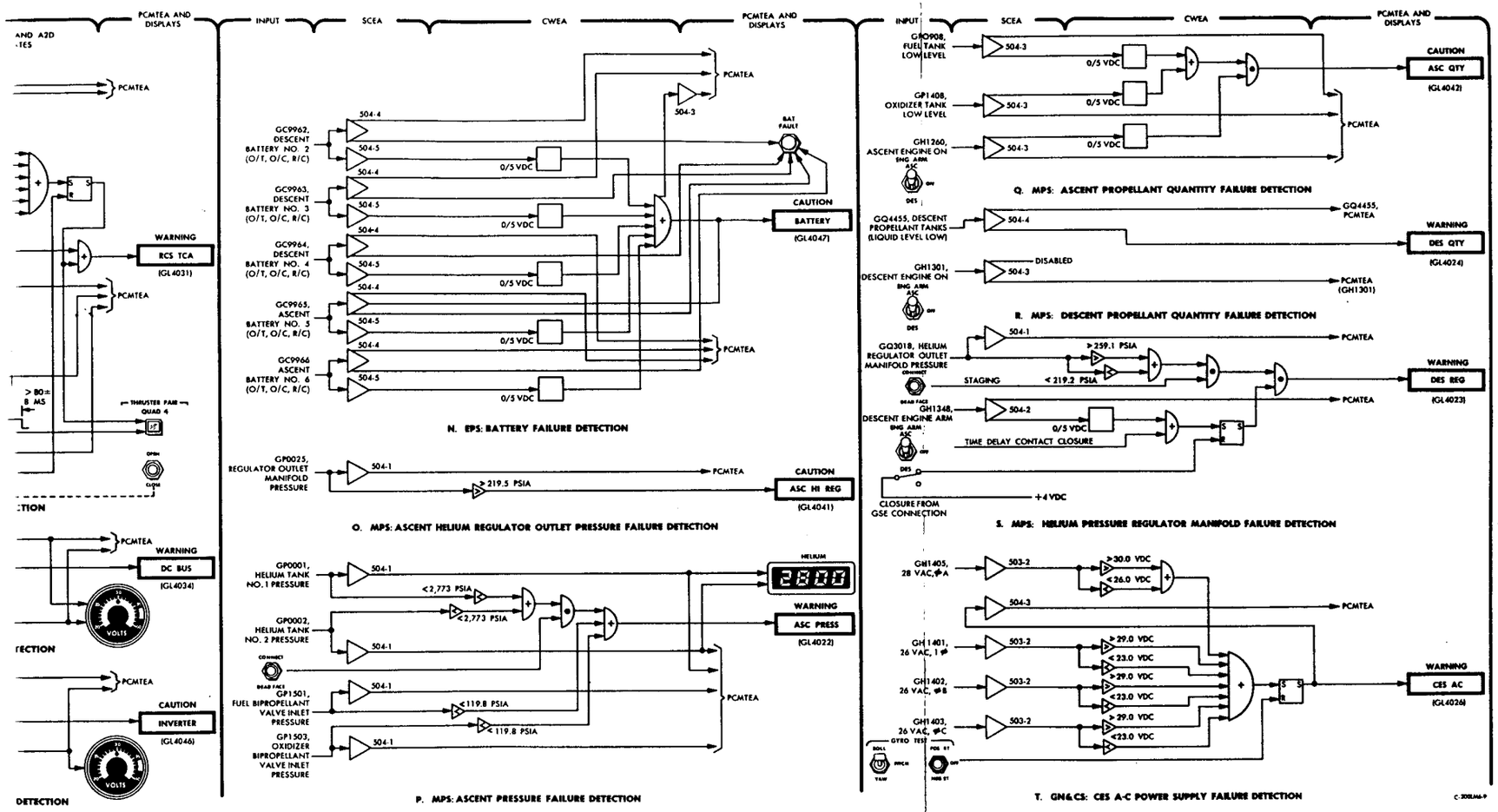

gic Diagram (Sheet 2 of 3)

/0 Change Date _____

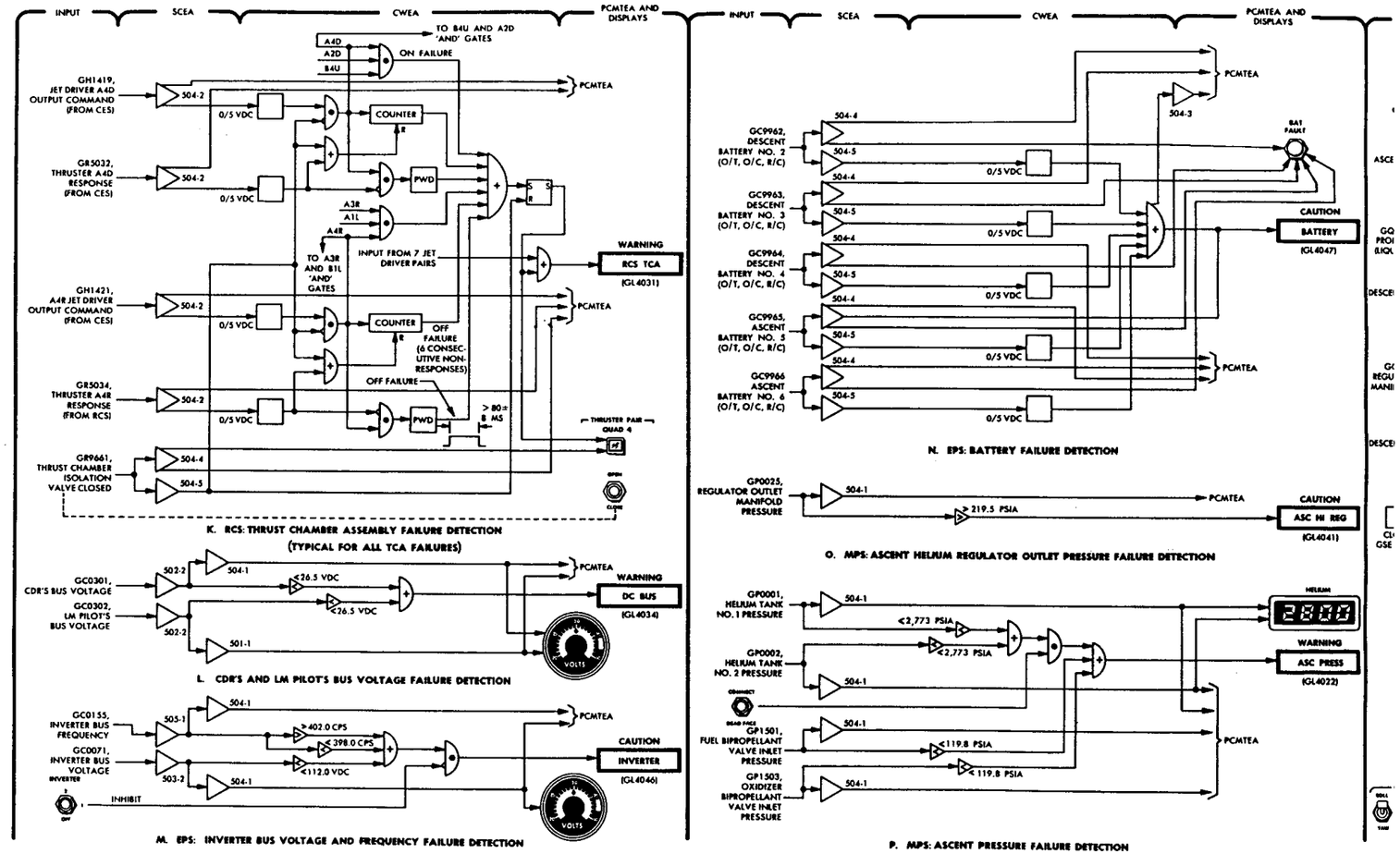

Figure 2.9-15. CWEA Failure Detection Circuits - Logic Diagram (Sheet 2 of 3)

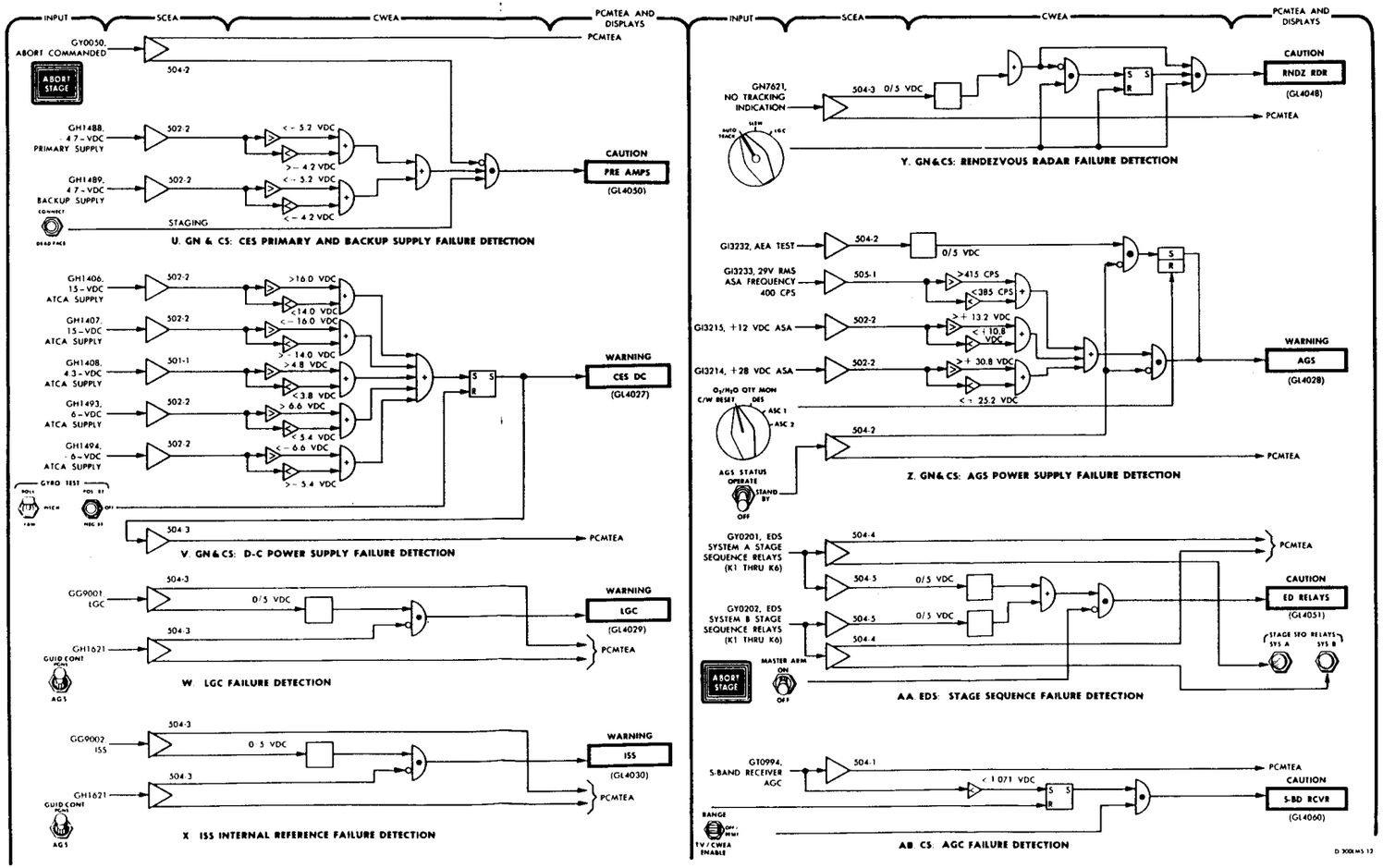

Figure 2.9-15. CWEA Failure Detection Circuits - Logic Diagram (Sheet 3 of 3)

IS

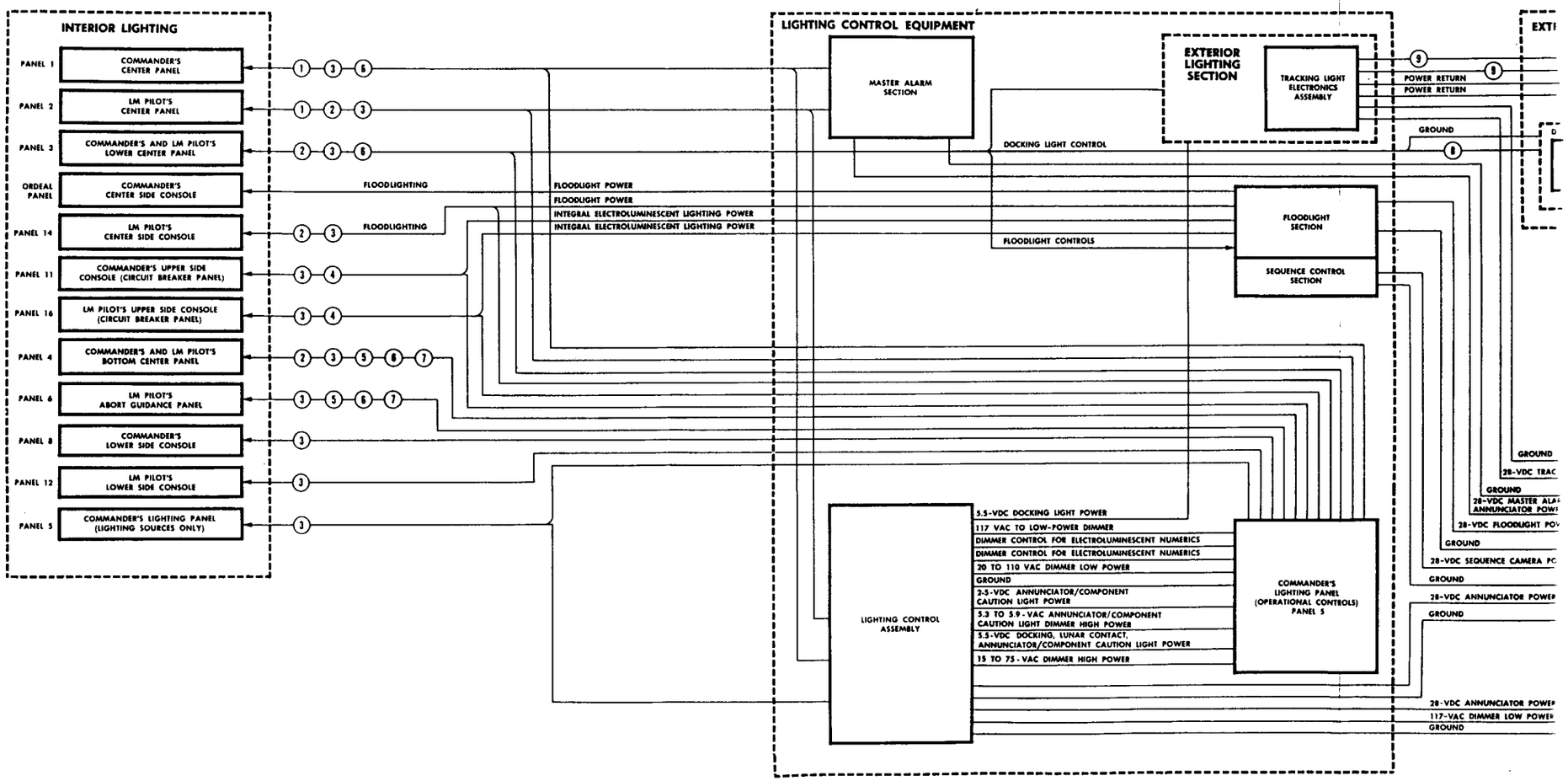

Figure 2.

Mission LM Basic Date 1 February

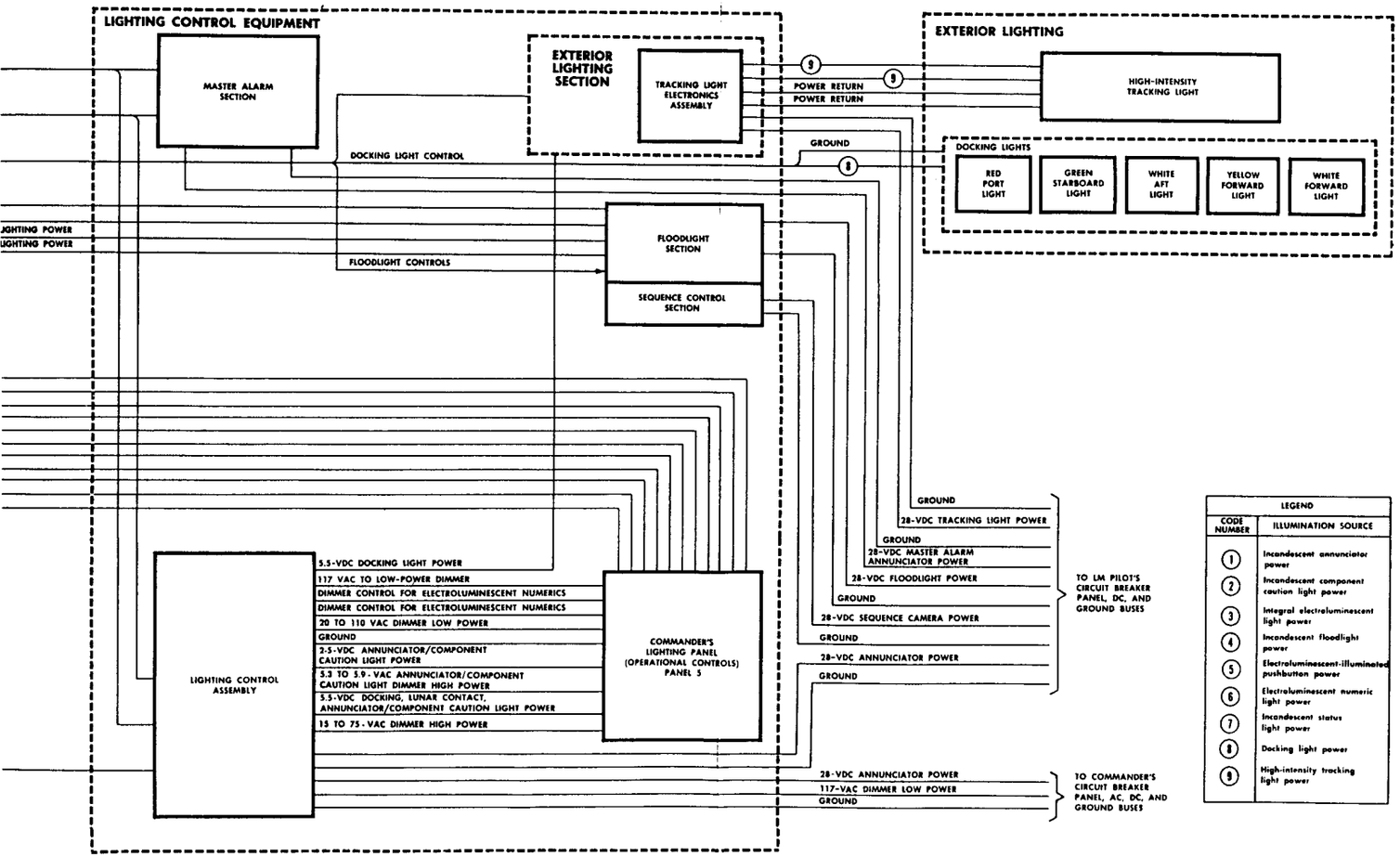

LEGEND	
CODE NUMBER	ILLUMINATION SOURCE
1	Incandescent annunciator power
2	Incandescent component caution light power
3	Integral electroluminescent light power
4	Incandescent floodlight power
5	Electroluminescent-illuminated pushbutton power
6	Electroluminescent numeric light power
7	Incandescent status light power
8	Docking light power
9	High-intensity tracking light power

LTG

Figure 2.10-1. Lighting Control Equipment

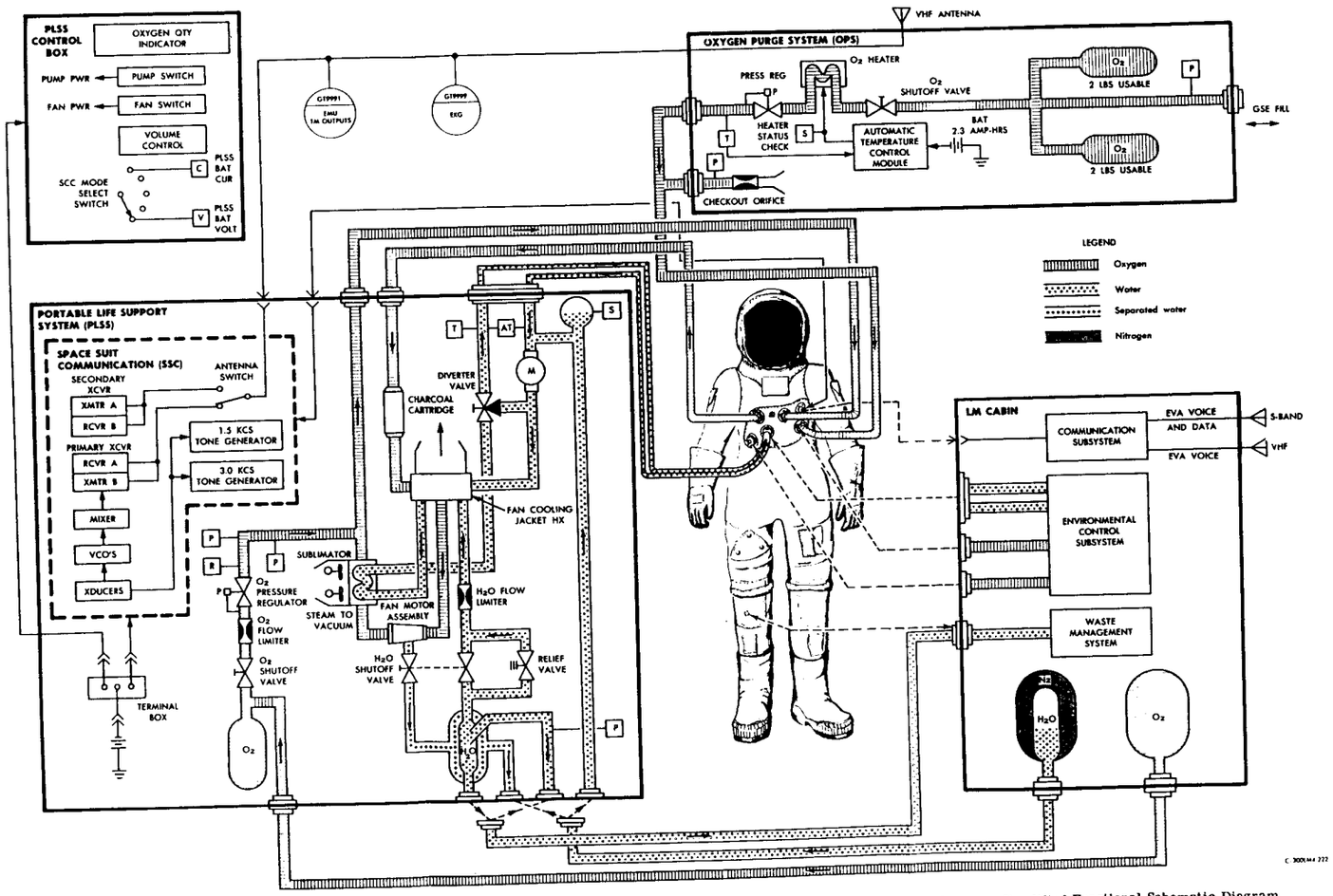

Figure 2.11-6. Portable Life Support System - Simplified Functional Schematic Diagram

CPE

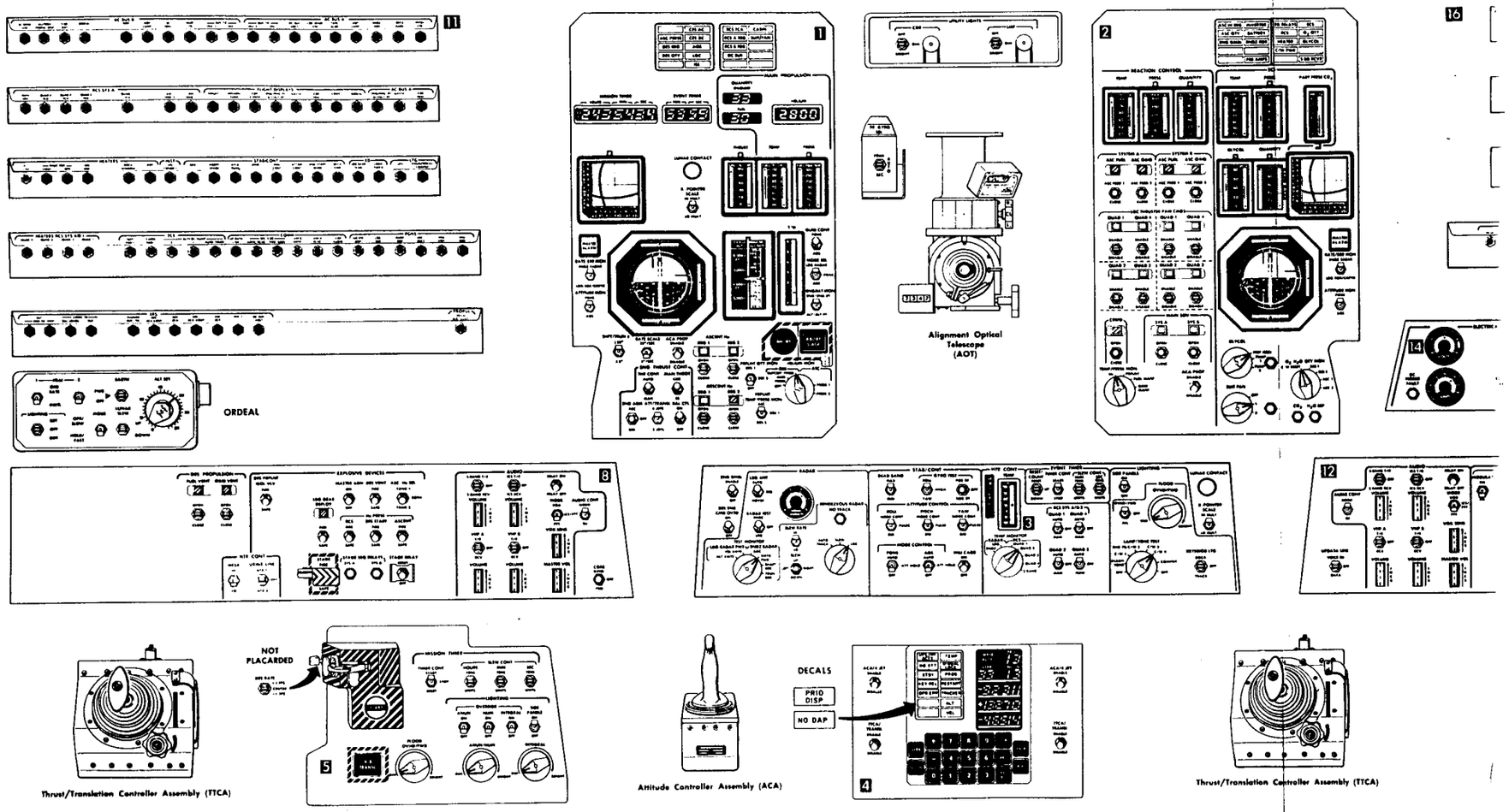

Figure

Mission LM Basic Date 1 Feb

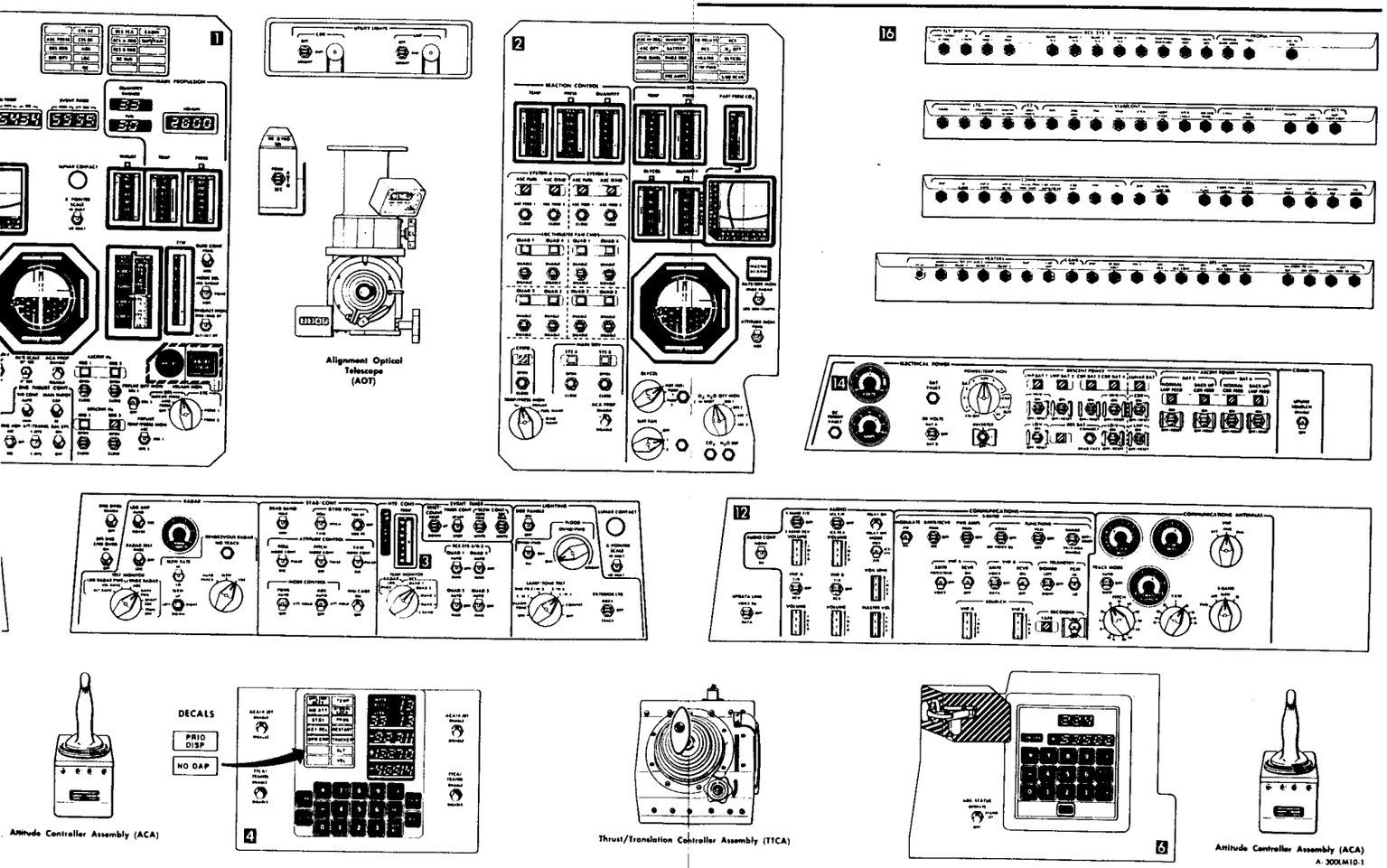

Figure 3-2. Controls and Displays (LM 8 and LM 9)

11 A

	AC BUS B										AC BUS A							
									BUS TIE		BUS TIE							
	SE WIND HTR	He/PQGS PROPUL DISP	S-BD ANT	ORDEAL	AGS	AOT LAMP	SE FDAI	NUM LTG	INV 2	INV 1	INV 2	INV 1	AC BUS VOLT	CDR WIND HTR	TAPE RCDR	AOT LAMP	RNDZ RDR	DECA GMBL
FUNCTIONS POWERED THRU CB	A-C pwr to LMP window htr	A-C pwr to helium, fuel, & oxid digital ind	A-C pwr to S-BD steerable ant mech drive assy	A-C pwr to ORDEAL resolvers A-C pwr to ORDEAL pnl ltg	A-C pwr to AEA outputs for FDAI & ORDEAL drive signals	A-C pwr to AOT reticle lamps	A-C pwr to LMP FDAI sphere drive	A-C pwr to all num displays	Connects inv 2 output to AC BUS B thru INVERTER sw	Connects inv 1 output to AC BUS B thru INVERTER sw	Connects inv 2 output to AC BUS A thru INVERTER sw	Connects inv 1 output to AC BUS A thru INVERTER sw	AC BUS A signal characteristics to IS for TM	A-C pwr to CDR window htr	A-C pwr to DSEA tape transport motors	A-C pwr to AOT reticle lamps	A-C pwr to RR pwr supply for generation of 400 cps 2 ϕ used for slewing RR ant	A-C pwr to DECA for GDA drive pwr Aux DC to man throttle CKTS & DECA "ATCA pwr monitor" CKTS
EFFECT OF CB OPENING (LOSS OF/OR REMAINING FUNCTION)	Loss of LMP window defogging	Loss of onboard DPS fuel & oxid qty monitoring Loss of onboard APS helium temp & press monitoring and DPS helium press monitoring (displays blank out)	Loss of S-BD steerable ant S-BD in-flight ant avail thru S-BAND sel	Loss of ORDEAL	Loss of monitoring of AEA outputs with FDAI & ORDEAL	AC BUS A pwr avail	Loss of LMP FDAI att display Error & rate needles still avail CDR FDAI att display avail	Loss of all num displays (including DEDA readout) Loss of RCS PRESS & RNG, RNG RATE ALT, ALT RATE IND, & X-PNTR scales	AC BUS A bus tie inv 2 pwr avail	AC BUS A bus tie inv 1 pwr avail	AC BUS B bus tie inv 2 pwr avail	AC BUS B bus tie inv 1 pwr avail	Loss of onboard monitoring of a-c characteristics Loss of a-c characteristics TM	Loss of CDR window defogging	Loss of recording capability	AC BUS B pwr avail	Loss of RR ant slew & track capability	GDA freezes at last position Man throttle range limited to ≈75% Cannot monitor ATCA DC pwr in DECA

11 B

	RCS SYS A								FLIGHT DISPLAYS					
	MAIN SOV	QUAD 4 TCA	QUAD 3 TCA	QUAD 2 TCA	QUAD 1 TCA		ASC FEED 2	ASC FEED 1	THRUST	MISSION TIMER	CDR X-PNTR	RNG/RNG RT ALT/ALT RT	GASTA	CDR FDAI
FUNCTIONS POWERED THRU CB	Pwr to sys A main fuel & oxid sov thru SYS A MAIN SOV sw	Pwr to prpint vlvs prim coils of sys A quad 4 TCA (A4D & A4R)	Pwr to prpint vlvs prim coils of sys A quad 3 TCA (A3R & A3U)	Pwr to prpint vlvs prim coils of sys A quad 2 TCA (A2D & A2A)	Pwr to prpint vlvs prim coils of sys A quad 1 TCA (A1U & A1F)		Pwr to sys A sec APS prpint interconnect vlvs thru SYS A ASC FEED 2 sw	Pwr to sys A prim APS prpint interconnect vlvs thru SYS A ASC FEED 1 sw	Pwr to eng THRUST ind Pwr to aux switching relay box thru ENG THRUST CONT THR CONT sw	Pwr to MISSION TIMER ind	Pwr to CDR X-pointer ind Pwr to aux switching relay box thru MODE SEL & RATE/ERR MON sw	Pwr to RNG, RNG RATE, ALT, ALT RATE ind drive motor	Pwr to GASTA	Pwr to CDR FDAI Pwr to aux switching relay box thru RATE/ ERR MON & ATTITUDE MON sw
EFFECT OF CB OPENING (LOSS OF/OR REMAINING FUNCTION)	Cannot change sys A main sov status (Normally Open) Note RCS sys A will not use APS prpints if sov are open	Loss of prim auto & man cont of sys A quad 4 TCA's (hardover, AGS direct, & +X-transl cont avail thru sec coils)	Loss of prim auto & man cont of sys A quad 3 TCA's (hardover, AGS direct, & +X-transl cont avail thru sec coils)	Loss of prim auto & man cont of sys A quad 2 TCA's (hardover, AGS direct, & +X-transl cont avail thru sec coils)	Loss of prim auto & man cont of sys A quad 1 TCA's (hardover, AGS direct, & +X-transl cont avail thru sec coils)		Cannot change status of sec pair of sys A APS interconnect vlvs (ASC feed 2 vlv Normally Closed)	Cannot change status of prim pair of sys A APS interconnect vlvs (ASC feed 1 vlv Normally Open)	Loss of eng THRUST ind Loss of switching relays	Loss of MISSION TIMER ind	Loss of CDR X-pointer ind Loss of switching relays Loss of AEA & LDG RDR lat vel & LDG RDR fwd vel on LMP X-pntr also LDG RDR alt data on RNG/ALT ind	Loss of RNG, RNG RATE, ALT, ALT RATE ind	Loss of GASTA Computer servo Loss of IMU att data to FDAI's	Loss of CDR FDAI Loss of switching relays

Figure 3-

Mission LM Basic Date 1 Feb

	BUS TIE		BUS TIE		AC BUS A						
NUM LTG	INV 2	INV 1	INV 2	INV 1	AC BUS VOLT	CDR WIND HTR	TAPE RCDR	AOT LAMP	RNDZ RDR	DECA GMBL	INTGL LTG
A-C pwr to all num displays	Connects inv 2 output to AC BUS B thru INVERTER sw	Connects inv 1 output to AC BUS B thru INVERTER sw	Connects inv 2 output to AC BUS A thru INVERTER sw	Connects inv 1 output to AC BUS A thru INVERTER sw	AC BUS A signal characteristics to IS for TM	A-C pwr to CDR window htr	A-C pwr to DSEA tape transport motors	A-C pwr to AOT recticle lamps	A-C pwr to RR pwr supply for generation of 400 cps 2 ϕ used for slewing RR ant	A-C pwr to DECA for GDA drive pwr Aux DC to man throttle CKTS & DECA "ATCA pwr monitor" CKTS	A-C pwr to integral ltg (e.g. tb ind, & panels)
Loss of all num displays (including DEDA readout) Loss of RCS PRESS & RNG, RNG RATE ALT, ALT RATE IND, & X-PNTR scales	AC BUS A bus tie inv 2 pwr avail	AC BUS A bus tie inv 1 pwr avail	AC BUS B bus tie inv 2 pwr avail	AC BUS B bus tie inv 1 pwr avail	Loss of onboard monitoring of a-c characteristics Loss of a-c characteristics TM	Loss of CDR window defogging	Loss of recording capability	AC BUS B pwr avail	Loss of RR ant slew & track capability	GDA freezes at last position Man throttle range limited to ≈75% Cannot monitor ATCA DC pwr in DECA	Loss of tb & ind ltg

Legend

Designates DUAL POWER to function

Designates SIMILAR functions

Designates DIFFERENT functions

							FLIGHT DISPLAYS								AC BUS A	
		ASC FEED 2	ASC FEED 1	THRUST	MISSION TIMER	CDR X-PNTR	RNG/RNG RT ALT/ALT RT	GASTA	CDR FDAI	COAS	ORDEAL	RNG/RNG RT ALT/ALT RT	GASTA	CDR FDAI
		Pwr to sys A sec APS prpint interconnect vlvs thru SYS A ASC FEED 2 sw	Pwr to sys A prim APS prpint interconnect vlvs thru SYS A ASC FEED 1 sw	Pwr to eng THRUST ind Pwr to aux switching relay box thru ENG THRUST CONT THR CONT sw	Pwr to MISSION TIMER ind	Pwr to CDR X-pointer ind Pwr to aux switching relay box thru MODE SEL & RATE/ERR MON sw	Pwr to RNG, RNG RATE, ALT, ALT RATE ind drive motor	Pwr to GASTA	Pwr to CDR FDAI Pwr to aux switching relay box thru RATE/ ERR MON & ATTITUDE MON sw	Pwr to fwd or ovhd COAS mount thru COAS sw	Pwr to ORDEAL stepper motor thru EARTH/ LUNAR sw	Pwr to RNG, RNG RATE ALT, ALT RATE ind logic	Pwr to GASTA resolvers	Pwr to CDR FDAI sphere drive
& man 1 AGS l cont)		Cannot change status of sec pair of sys A APS interconnect vlvs (ASC feed 2 vlv Normally Closed)	Cannot change status of prim pair of sys A APS interconnect vlvs (ASC feed 1 vlv Normally Open)	Loss of eng THRUST ind Loss of switching relays	Loss of MISSION TIMER ind	Loss of CDR X-pointer ind Loss of switching relays Loss of AEA & LDG RDR lat vel & LDG RDR fwd vel on LMP X-pntr also LDG RDR alt data on RNG/ALT ind	Loss of RNG, RNG RATE, ALT, ALT RATE ind	Loss of GASTA Computer servo Loss of IMU att data to FDAI's	Loss of CDR FDAI Loss of switching relays	Loss of COAS reticle lt	Loss of ORDEAL stepper motor Loss of local horiz reference	Loss of RNG, RNG RATE ALT & ALT RATE ind	Loss of PGNS gimbal angle display Loss of PGNS att display	Loss of CDR FDAI att display Error & rate needles still avail LMP FDAI att display avail

Figure 3-3. Circuit Breaker Functions (Sheet 1 of 5)

11 C

	HEATERS						INST	STAB/CONT								ED		LTG	
	URINE LINE	RNDZ RDR STDBY	RNDZ RDR OPR	LDG RDR	DOCK WINDOW	AOT	SIG CONDR 1	AEA	ABORT STAGE	ATCA (PGNS)	AELD	ENG CONT	ATT DIR CONT	ENG START OVRD	DECA PWR	LDG GEAR FLAG	LOGIC PWR A	UTIL	A
FUNCTIONS POWERED THRU CB	Pwr to urine line htr to prevent freeze-up of vent tube valve	Pwr to RR ant htr cont ckt to maintain ant above min survival temp	Pwr to RR htr cont ckt for ant & electronics assy	Pwr to LR htr cont ckt to maintain ant above min survival temp	Pwr to docking window htr	Pwr to AOT htrs	Pwr to ERA 1 in SCEA	Pwr to AEA pwr supply for internal use & DEDA pwr	Pwr to abort stage electronics thru ABORT STAGE sw	Pwr to enable prim preamps Redundant bias to jet drivers under PGNS & ATCA control Pwr to S&C cont assy for guid cont switching	Pwr to S&C cont assy No. 1 for asc eng on cmd, AGS auto deadband selection, & staging cmd during abort stage to ED SYS A	Pwr to disable auto thr cont Pwr to des eng stop when asc eng armed or when staging Redundant feed to des eng arm ckts Pwr to reset man eng start relays Pwr for man des eng start Pwr to LUNAR CONTACT lt on pnl 1	Pwr to ACA for direct firing of RCS Pwr to +X TRANSL pb Enabling voltage for AGS pulse mode cmds	Pwr to eng START sw Redundant pwr to ENG ARM sw	Pwr to des eng & cont logic of DECA	Pwr to LDG GEAR DEPLOY cb	Pwr to EDS sys A	Pwr to portable util lts thru CDR & LMP UTILITY LIGHTS sw	Pwr to c eng STA caut, pw status lt Pwr to EXTERI SLA pr Pwr to
EFFECT OF CB OPENING (LOSS OF/OR REMAINING FUNCTION)	Loss of htrs causes gradual degradation of urine collection capability	If RR temp below min survival temp, permanent degradation results CB not essential when RR OPR cb is closed	Loss of RR, or degradation of response	If LR temp below min survival temp, permanent degradation results CB not required when cb PGNS: LDG RDR is closed	Loss of window defrosting & defogging	Loss of AOT defrosting	Loss of ERA 1 (approx half oper data)	LMP AEA cb avail	STAGE sw avail Note If ABORT STAGE pb is pushed, des eng will shut down if thrusting, ASC eng will not ignite until ENG ARM sw - ASC	Loss of PGNS cont Prim pwr provided with LMP ATCA cb Cannot switch from AGS to PGNS RCS firings not affected in AGS	LMP AELD cb avail Loss of engine on signal to ED SYS A	Loss of redundant feed to des eng arm Loss of man des eng start & stop Loss of man thrust cont (remains in auto mode) Loss of eng gimbal off, if DPS is armed Under AGS cont: loss of analog gimbal trim cmds & auto min deadband selection when starting des eng Loss of LUNAR CONTACT lt on pnl 1	Loss of AGS direct & pulse modes, hardover, & + X-TRANSL pb (sec TCA coils not avail) Man att cont avail via Att Hold/Rate cmd & PGNS min impulse modes	Prim pwr avail for ENG ARM sw from LMP DISP/ ENG OVRD LOGIC cb Loss of man des & asc eng start Auto eng start avail	Loss of des eng gimbaling & throttling capability Loss of AGS auto min deadband selection Pwr from DES ENG OVRD cb avail to start eng (at max thrust) Loss of GDA caution ind	Loss of LDG GEAR DEPLOY cb	Loss of EDS sys A EDS sys B avail	Loss of portable util lts	Loss of (During no back Loss of LMP's COMP TD & E Loss of ERR lt

11 D

	HEATER RCS SYS A/B-1				ECS					COMM								
							GLYCOL PUMP				SEC S-BD							
	QUAD 4	QUAD 3	QUAD 2	QUAD 1	SUIT FAN 1	CABIN FAN	2	1	AUTO TRNFR	UP DATA LINK	XMTR/RCVR	PWR AMPL	VHF B XMTR	VHF A RCVR	CDR AUDIO	SIG STR DISP	LDG RDR	
FUNCTIONS POWERED THRU CB	Pwr to sys A/B-1 htr for each TCA of cluster 4	Pwr to sys A/B-1 htr for each TCA of cluster 3	Pwr to sys A/B-1 htr for each TCA of cluster 2	Pwr to sys A/B-1 htr for each TCA of cluster 1	Pwr to suit fan No. 1 (suit ckt assy) thru SUIT FAN sel	Pwr to cabin fan thru ECS relay box	Pwr to glycol pump No. 2 thru GLYCOL sel	Pwr to glycol pump No. 1 thru GLYCOL sel	Energizes transfer relay to auto switch to pump No. 2 when pump No. 1 ΔP drops below preset value	Pwr to DUA pwr supply	Pwr to sec pwr supply in S-BD xcvr thru XMTR/RCVR sw Pwr to PMP for emer key and VOICE BU functions	Pwr to sec pwr supply in S-BD pwr ampl thru PWR AMPL sw	Pwr to VHF B xmtr voice & data ckts thru VHF B XMTR sw	Pwr to VHF A rcvr thru VHF A RCVR sw	Pwr to CDR audio center	Pwr to SIGNAL STRENGTH ind	Pwr to LR pwr supply Interrupts pwr to htr cont ckt	
EFFECT OF CB OPENING (LOSS OF/OR REMAINING FUNCTION)	Loss of set of htrs in cluster 4 (sys A/B-2 htrs avail, longer warmup required)	Loss of set of htrs in cluster 3 (sys A/B-2 htrs avail, longer warmup required)	Loss of set of htrs in cluster 2 (sys A/B-2 htrs avail, longer warmup required)	Loss of set of htrs in cluster 1 (sys A/B-2 htrs avail, longer warmup required)	Life support system degraded Backup is SUIT FAN sel - 2	Loss of cabin fan	Loss of prim loop redundancy To activate sec loop, WATER TANK SELECTOR vlv - SEC, GLYCOL sel - INST (SEC), SEC EVAP FLOW vlv - OPEN, GLYCOL PUMP SEC cb - close, PRIM EVAP FLOW #1 - closed	Loss of glycol pump No. 1 (if AUTO TRNFR cb closed, glycol pump No. 2 auto activated) Auto transfer relay switch to pump No. 2 (To disable GLYCOL comp cont lt, manually switch GLYCOL sel - PUMP 2)	Loss of auto transfer Manually select pump: GLYCOL sel - PUMP 1 or PUMP 2	Loss of digital uplink capability Loss of received S-bd backup voice Prime voice avail	Prim S-BD xcvr avail Loss of sec S-BD xcvr	Loss of sec S-BD pwr ampl Prim pwr ampl avail	VHF A xmtr voice ckts avail Loss of data & voice transmission via VHF B	VHF B rcvr avail	Loss of relay capability CDR must use LMP audio center Loss of all VHF B xmtr voice	Loss of onboard LR & RR monitoring	Loss of LR	

Figure 3-3. Circuit Breaker Functions (Sheet 2 of 5)

STAB/CONT						ED		LTG	
ATCA (PGNS)	AELD	ENG CONT	ATT DIR CONT	ENG START OVRD	DECA PWR	LDG GEAR FLAG	LOGIC PWR A	UTIL	ANUN/DOCK/ COMPNT
Pwr to enable prim preamps Redundant bias to jet drivers under PGNS & ATCA control Pwr to S&C cont assy for guid cont switching	Pwr to S&C cont assy No. 1 for asc eng on cmd, AGS auto dead-band selection, & staging cmd during abort stage to ED SYS A	Pwr to disable auto thr cont Pwr to des eng stop when asc eng armed or when staging Redundant feed to des eng arm ckts Pwr to reset man eng start relays Pwr for man des eng start Pwr to LUNAR CONTACT lt on pnl 1	Pwr to ACA for direct firing of RCS Pwr to +X TRANSL pb Enabling voltage for AGS pulse mode cmds	Pwr to eng START sw Redundant pwr to ENG ARM sw	Pwr to des eng & cont logic of DECA	Pwr to LDG GEAR DEPLOY tb	Pwr to EDS sys A	Pwr to portable util lts thru CDR & LMP UTILITY LIGHTS sw	Pwr to caut & warn anun, eng START & STOP, comp caut, pwr fail, & DSKY status lts Pwr to docking lts thru EXTERIOR LTG & LM/ SLA press sw Pwr to DEDA OPR ERR lt
Loss of PGNS cont Prim pwr provided with LMP ATCA cb Cannot switch from AGS to PGNS RCS firings not affected in AGS	LMP AELD cb avail Loss of engine on signal to ED SYS A	Loss of redundant feed to des eng arm Loss of man des eng start & stop Loss of man thrust cont (remains in auto mode) Loss of eng gimbal off, if DPS is armed Under AGS cont: loss of analog gimbal trim cmds & auto min deadband selection when starting des eng Loss of LUNAR CONTACT lt on pnl 1	Loss of AGS direct & pulse modes, hardover, & + X-TRANSL pb (sec TCA coils not avail) Man att cont avail via Att Hold/Rate cmd & PGNS min impulse modes	Prim pwr avail for ENG ARM sw from LMP DISP/ ENG OVRD LOGIC cb Loss of man des & asc eng start Auto eng start avail	Loss of des eng gimbaling & throttling capability Loss of AGS auto min dead-band selection Pwr from DES ENG OVRD cb avail to start eng (at max thrust) Loss of GDA caution ind	Loss of LDG GEAR DEPLOY tb	Loss of EDS sys A EDS sys B avail	Loss of portable util lts	Loss of docking lts (During TD & E, no backup) Loss of Anun lighting LMP's ANUN/DOCK/ COMPNT cb avail after TD & E Loss of DEDA OPR ERR lt

LEGEND

Designates DUAL POWER to function

Designates SIMILAR functions

Designates DIFFERENT functions

OL PUMP		COMM						PGNS					
			SEC S-BD										
l	AUTO TRNFR	UP DATA LINK	XMTR/RCVR	PWR AMPL	VHF B XMTR	VHF A RCVR	CDR AUDIO	SIG STR DISP	LDG RDR	RNDZ RDR	LGC/ DSKY	IMU STBY	IMU OPR
to glycol p No. 1 GLYCOL sel	Energizes transfer relay to auto switch to pump No. 2 when pump No. 1 ΔP drops below preset value	Pwr to DUA pwr supply	Pwr to sec pwr supply in S-BD xcvr thru XMTR/RCVR sw Pwr to PMP for emer key and VOICE BU functions	Pwr to sec pwr supply in S-BD pwr ampl thru PWR AMPL sw	Pwr to VHF B xmtr voice & data ckts thru VHF B XMTR sw	Pwr to VHF A rcvr thru VHF A RCVR sw	Pwr to CDR audio center	Pwr to SIGNAL STRENGTH ind	Pwr to LR pwr supply Interrupts pwr to htr cont ckt	Pwr to RR electronics assy	Pwr to LGC & PSA pwr supplies	Pwr to IMU temp cont ckt	Pwr to IMU, PSA, CDU, & PTA
s of glycol p No. 1 UTO TRNFR loss, glycol p No. 2 auto vated) transfer y switch to p No. 2 (To ble GLYCOL p caut lt, ually switch COL sel - MP 2)	Loss of auto transfer Manually select pump: GLYCOL sel - PUMP 1 or PUMP 2	Loss of digital uplink capability Loss of received S-bd backup voice Prime voice avail	Prim S-BD xcvr avail Loss of sec S-BD xcvr	Loss of sec S-BD pwr ampl Prim pwr ampl avail	VHF A xmtr voice ckts avail Loss of data & voice transmission via VHF B	VHF B rcvr avail	Loss of relay capability CDR must use LMP audio center Loss of all VHF B xmtr voice	Loss of onboard LR & RR monitoring	Loss of LR	Loss of RR	Loss of PGNS Loss of 1.024-mc clock AGS avail	Loss of PIPA & IRIG htrs, temp alarm thermostat IMU accuracy degraded	Loss of IMU, PSA, CDU, & PTA Loss of ISS & att data to LGC & ind LGC avail, but cannot perform all functions Loss of manual throttle in PGNS mode

11
E

	EPS											PROPUL
	BAT FEED TIE		CROSS TIE: BAL LOADS	CROSS TIE: BUS	NLUNAR BUS TIE	DES ECA CONT	DES ECA	ASC ECA CONT	ASC ECA	INV 1	DC BUS VOLT	DES HE REG/VENT
FUNCTIONS POWERED THRU CB	Connects bat No. 3 or lunar bat, & bat No. 4 & 6 to CDR d-c bus During bat No. 5 backup, also connects bat No. 5 to CDR d-c bus	Redundant cb	Supplies redundant pwr to CWEA, EPS disp, sig sensor, sig cond #2, & PCM/TE Connects CDR bus to LMP bus thru LMP CROSS TIE cb	Backup cb	Connects CDR neg bus to neg xlunar bus for LM ground	Pwr from CDR bus to low- and high-voltage coils in ECA No. 1 & 2 thru HI VOLTAGE & LOW VOLTAGE sw Pwr to des bats lv/hv off & deadface relay reset for abort stage	Pwr from CDR bus to pwr supplies of both des ECA's for current & reverse current ind & O/C protection Pwr to relays for abort stage	Pwr from CDR bus to norm & backup main feed contactor coils in ECA No. 3 & 4 thru NORMAL FEED & BACK UP FEED sw to switch off asc bats Pwr to DES BATS sw	Pwr from CDR bus to pwr supplies of both asc ECA's for current & reverse current ind & O/C protection	Pwr from CDR bus to inv No. 1 for generation of 115V, 400-cps, a-c pwr, thru INVERTER sw	Pwr from CDR bus to IS, & to monitor bus voltage for telemetry & warn lt Pwr to PCM/TE, sig sensors & sig condrs via relay 4K6 for prelaunch telemetry	Pwr to DPS helium solenoid vlvs thru DES He REG 1 & 2 sw Pwr to DPS prplnt vent solenoid vlvs thru DES FUEL & OXID VENT sw
EFFECT OF CB OPENING (LOSS OF/OR REMAINING FUNCTION)	Adjacent cb avail	Adjacent cb avail	Loss of LMP bus when CSM powers LM results in loss of AGS & possible loss of S-bd steerable ant	Only closed in event of feeder short when powering LMP bus thru CDR bus, or vice versa	No loss of function: relay contacts in parallel with cb	Redundant cb on LMP panel supplies pwr from LMP bus	Redundant cb on LMP panel supplies pwr from LMP bus	Redundant cb on LMP panel supplies pwr from LMP bus	Redundant cb on LM panel supplies pwr from LMP bus	Inv No. 2 avail thru INVERTER sw (pwr from LMP bus to inv No. 2)	Loss of monitoring of CDR bus Loss of prelaunch telemetry	Cannot change status of helium solenoid vlv (Prim: Normally Open, Sec: Normally Closed during normal mission operation) Cannot change status of solenoid vent vlvs

Figure 3-3. Circuit Breaker Functions

EPS								PROPUL
IE BUS	XLUNAR BUS TIE	DES ECA CONT	DES ECA	ASC ECA CONT	ASC ECA	INV 1	DC BUS VOLT	DES HE REG/VENT
Backup cb	Connects CDR neg bus to neg xlunar bus for LM ground	Pwr from CDR bus to low- and high-voltage coils in ECA No. 1 & 2 thru HI VOLTAGE & LOW VOLTAGE sw Pwr to des bats lv/hv off & deadface relay reset for abort stage	Pwr from CDR bus to pwr supplies of both des ECA's for current & reverse current ind & O/C protection Pwr to relays for abort stage	Pwr from CDR bus to norm & backup main feed contactor coils in ECA No. 3 & 4 thru NORMAL FEED & BACK UP FEED sw to switch off asc bats Pwr to DES BATS sw	Pwr from CDR bus to pwr supplies of both asc ECA's for current & reverse current ind & O/C protection	Pwr from CDR bus to inv No. 1 for generation of 115V, 400-cps, a-c pwr, thru INVERTER sw	Pwr from CDR bus to IS. & to monitor bus voltage for telemetry & warn lt Pwr to PCM/TE, sig sensors & sig condrs via relay 4K6 for prelaunch telemetry	Pwr to DPS helium solenoid vlvs thru DES He REG 1 & 2 sw Pwr to DPS prplnt vent solenoid vlvs thru DES FUEL & OXID VENT sw
Only closed in event of feeder short when powering LMP bus thru CDR bus, or vice versa	No loss of function; relay contacts in parallel with cb	Redundant cb on LMP panel supplies pwr from LMP bus	Redundant cb on LMP panel supplies pwr from LMP bus	Redundant cb on LMP panel supplies pwr from LMP bus	Redundant cb on LM panel supplies pwr from LMP bus	Inv No. 2 avail thru INVERTER sw (pwr from LMP bus to inv No. 2)	Loss of monitoring of CDR bus Loss of prelaunch telemetry	Cannot change status of helium solenoid vlv (Prim: Normally Open, Sec: Normally Closed during normal mission operation) Cannot change status of solenoid vent vlvs

LEGEND

- ——— Designates DUAL POWER to function
- - - - - Designates SIMILAR functions
- ▬▬▬ Designates DIFFERENT functions

Figure 3-3. Circuit Breaker Functions (Sheet 3 of 5)

16 A

	FLT DISP		RCS SYS B										PROPUL	
	EVENT TIMER/ SE FDAI	SE X-PNTR	ASC FEED 1	ASC FEED 2		QUAD 1 TCA	QUAD 2 TCA	QUAD 3 TCA	QUAD 4 TCA	CRSFD	TEMP/PRESS DISP - FLAGS	PQGS/ DISP	MAIN SOV	DISP/ENG OVRD LOGIC	PQGS
FUNCTIONS POWERED THRU CB	Pwr to EVENT TMR ind Pwr to LMP FDAI Pwr to aux switching relay box thru RATE/ ERR MON & ATTITUDE MON sw	Pwr to LMP X pointer ind PWR to aux switching relay box thru RATE/ ERR MON sw	Pwr to sys B prim APS prplnt interconnect vlvs thru SYS B ASC FEED 1 sw	Pwr to sys B sec APS prplnt interconnect vlvs thru SYS B ASC FEED 2 sw		Pwr to prplnt vlvs prim coils of sys B quad 1 TCA (B1L & B1D)	Pwr to prplnt vlvs prim coils of sys B quad 2 TCA (B2L & B2U)	Pwr to prplnt vlvs prim coils of sys B quad 3 TCA (B3A & B3D)	Pwr to prplnt vlvs prim coils of sys B quad 4 TCA (B4L & B4U)	Pwr to prplnt crossfeed vlvs thru CRSFD sw	Pwr to RCS TEMP & PRESS ind thru TEMP/PRESS MON sel & to all RCS tb	Pwr to RCS sys A & sys B prplnt qty computers & QUANTITY ind	Pwr to sys B main fuel & oxid sov thru SYS B MAIN SOV sw	Pwr to MPS: FUEL & OXID TEMP & PRESS ind thru PRPLNT TEMP/PRESS MON sw & to all MPS tb Redundant pwr to eng arm circuits for manual asc eng arm & des cmd ovrd	Pwr to DPS prplnt qty gaging sys unit thru PRPLNT QTY MON sw
EFFECT OF CB OPENING (LOSS OF/OR REMAINING FUNCTION)	Loss of EVENT TIMER ind Loss of LMP FDAI Loss of switching relays	Loss of LMP X pointer ind Loss of switching relays	Cannot change status of prim pair of APS interconnect vlvs (ASC FEED 1 vlv Normally Open)	Cannot change status of sec pair of APS interconnect vlvs (ASC FEED 2 vlv Normally Closed)		Loss of prim auto & man cont of sys B quad 1 TCA's (hardover, AGS direct, & +X-transl cont avail thru sec coils)	Loss of prim auto & man cont of sys B quad 2 TCA's (hardover, AGS direct, & +X-transl cont avail thru sec coils)	Loss of prim auto & man cont of sys B quad 3 TCA's (hardover, AGS direct, & +X-transl cont avail thru sec coils)	Loss of prim auto & man cont of sys B quad 4 TCA's (hardover, AGS direct, & +X-transl cont avail thru sec coils)	Cannot change status of crsfd vlvs (Normally Closed)	Loss of onboard monitoring of RCS prplnt temp & press, & helium press (Pwr fail light above PRESS ind goes on) Loss of monitoring of RCS vlv status (tb indicates pwr off)	Loss of onboard monitoring of RCS sys A & sys B prplnt qty (Pwr fail light above ind goes on)	Cannot change sys B main sov status (Normally Open) Note RCS sys B will not use APS prplnts if sov are open	Loss of onboard monitoring of MPS prplnt temp & press (Pwr fail light above PRESS ind goes on) Loss of monitoring of MPS vlv status (tb indicates pwr off) Loss of redundant pwr	Loss of onboard monitoring of DPS prplnt qty

16 B

	LTG				ED	STAB/CONT								
	FLOOD	TRACK	ANUN/DOCK/ COMPNT	MASTER ALARM	LOGIC PWR B	AEA	ENG ARM	ASA	AELD	ATCA	ABORT STAGE	ATCA (AGS)	DES ENG OVRD	CWEA
FUNCTIONS POWERED THRU CB	Pwr to cabin pnl, fwd & ovhd flood lts thru FLOOD sw Pwr to cabin fwd & ovhd lt thru docking hatch sw	Pwr to tracking lt thru EXTERIOR LTG sw & tracking lt electronics assy	Pwr to caut & warn anun, eng START & STOP, docking thru EXTERIOR LTG sw, comp caut, ind pwr fail, & DSKY status lts Pwr to DEDA OPR ERR lt	Pwr to MASTER ALARM lt & tone gen	Pwr to EDS sys B	Pwr to AEA pwr supply for internal use & DEDA pwr	(ENG ARM sw - DES) Pwr to des eng actuator isol vlvs thru DECA relays (ENG ARM sw - ASC) Pwr to AELD to enable asc eng ignition Pwr to relay drivers for auto APS & DPS cont logic	Pwr to ASA pwr supply & ASA heaters	Pwr to S&C cont assy No. 1 for asc eng on cmd & AGS auto dead band selection & abort stage signal to ED sys B stage relay	Pwr to ATCA pwr supply for ATCA & DECA pwr Pwr to LUNAR CONTACT lt on pnl 3	Pwr to abort stage electronics thru ABORT STAGE sw	Pwr to enable abort preamps Pwr to enable both TTCA's Pwr to S&C cont assy for guid cont switching Provides gyro test pwr	Redundant pwr to actuator isol & pilot vlvs of des eng Note Eng fires at full throttle only	Pwr to CWEA
EFFECT OF CB OPENING (LOSS OF/OR REMAINING FUNCTION)	Loss of flood lts	Loss of tracking lt	Loss of caut & warn anun, eng START & STOP, docking, comp caut, ind pwr fail, & DSKY status lts Alternative is CDR CB LTG: ANUN/DOCK/ COMPNT Loss of DEDA OPR ERR lt	Loss of MASTER ALARM lt and audio tone	Loss of EDS sys B EDS sys A avail	CDR AEA cb avail	Pwr for ENG ARM sw avail with CDR CB S/C: ENG START OVRD Arming des eng with ABORT pb avail Arming asc eng with ABORT STAGE pb avail Loss of auto eng start for APS & DPS. (START pb avail)	Loss of AGS att cont Man att cont avail	CDR CB S/C: AELD avail Loss of engine on signal to ED sys B	Loss of AGS auto & att hold/ rate cmd cont modes Loss of FDAI rate indication & error ref Loss of RR auto track & slew modes (loss of slewing pwr); LGC mode avail Loss of gimbal & throttle capability (DPS start at max thrust) Loss of APS auto on Loss of LUNAR CONTACT lt on pnl 3	Abort staging avail with CDR CB S/C: ABORT STAGE Note Des eng will shut down, but asc eng will not ignite until ENG ARM sw - ASC Loss of asc eng arm enable (ENG ARM sw avail) & time delay Loss of des eng override	Loss of auto AGS RCS firing Prim pwr provided with LMP ATCA cb Cannot sw from PGNS to AGS RCS firing unaffected in PGNS RGA cannot be tested	Loss of des eng override	Loss of CWEA Most malfunctions are monitored by MSFN via telemetry some are monitored on cabin ind

Figure 3-3. Circuit Breaker Functions (Sheet 4 of 5)

RCS SYS B						PROPUL			
UAD 2 TCA	QUAD 3 TCA	QUAD 4 TCA	CRSFD	TEMP/PRESS DISP - FLAGS	PQGS/ DISP	MAIN SOV	DISP/ENG OVRD LOGIC	PQGS	ASC He REG
prplnt vlvs ils of sys B TCA B2U)	Pwr to prplnt vlvs prim coils of sys B quad 3 TCA (B3A & B3D)	Pwr to prplnt vlvs prim coils of sys B quad 4 TCA (B4F & B4U)	Pwr to prplnt crossfeed vlvs thru CRSFD sw	Pwr to RCS TEMP & PRESS ind thru TEMP/PRESS MON sel & to all RCS tb	Pwr to RCS sys A & sys B prplnt qty computers & QUANTITY ind	Pwr to sys B main fuel & oxid sov thru SYS B MAIN SOV sw	Pwr to MPS: FUEL & OXID TEMP & PRESS ind thru PRPLNT TEMP/PRESS MON sw & to all MPS tb Redundant pwr to eng arm circuits for manual asc eng arm & des cmd ovrd	Pwr to DPS prplnt qty gaging sys cont unit thru PRPLNT QTY MON sw	Pwr to APS helium solenoid viv thru ASC He REG 1 & 2 sw
prim auto cont of ad 2 hardover, ect. & +X- ont avail cods)	Loss of prim auto & man cont of sys B quad 3 TCA's (hardover, AGS direct, & +X- transl cont avail thru sec coils)	Loss of prim auto & man cont of sys B quad 4 TCA's (hardover, AGS direct, & +X- transl cont avail thru sec coils)	Cannot change status of crsfd vlvs (Normally Closed)	Loss of onboard monitoring of RCS prplnt temp & press, & helium press (Pwr fail light above PRESS ind goes on) Loss of monitoring of RCS viv status (tb indicates pwr off)	Loss of onboard monitoring of RCS sys A & sys B prplnt qty (Pwr fail light above ind goes on)	Cannot change sys B main sov status (Normally Open) Note RCS sys B will not use APS prplnts if sov are open	Loss of onboard monitoring of MPS prplnt temp & press (Pwr fail light above PRESS ind goes on) Loss of monitoring of MPS viv status (tb indicates pwr off) Loss of redundant pwr	Loss of onboard monitoring of DPS prplnt qty	Cannot change status of helium solenoid vlvs (Normally Open)

LEGEND

——— Designates DUAL POWER to function

- - - - Designates SIMILAR functions

▬▬▬ Designates DIFFERENT functions

STAB/CONT					INST					ECS	
ENG ARM	ASA	AELD	ATCA	ABORT STAGE	ATCA (AGS)	DES ENG OVRD	CWEA	SIG SENSOR	PCM/TE	SIG CONDR 2	SUIT FLOW CONT
RM sw - DES) Pwr ng actuator isol u DECA relays RM sw - ASC) Pwr D to enable asc eng relay drivers for S & DPS cont logic	Pwr to ASA pwr supply & ASA heaters	Pwr to S&C cont assy No. 1 for asc eng on cmd & AGS auto dead band selection & abort stage signal to ED sys B stage relay	Pwr to ATCA pwr supply for ATCA & DECA pwr Pwr to LUNAR CONTACT lt on pnl 3	Pwr to abort stage electronics thru ABORT STAGE sw	Pwr to enable abort preamps Pwr to enable both TTCA's Pwr to S&C cont assy for guid cont switching Provides gyro test pwr	Redundant pwr to actuator isol & pilot vlvs of des eng Note Eng fires at full throttle only	Pwr to CWEA	Pwr to all subsys sensors	Pwr to PCMTEA	Pwr to ERA 2 in SCEA	Pwr to suit isol viv solenoid for auto closure
ENG ARM sw th CDR CB S/C: ART OVRD des eng with pb avail asc eng with STAGE pb avail auto eng r APS & DPS, pb avail)	Loss of AGS att cont Man att cont avail	CDR CB S/C: AELD avail Loss of engine on signal to ED sys B	Loss of AGS auto & att hold/ rate cmd cont modes Loss of FDAI rate indication & error ref Loss of RR auto track & slew modes (loss of slewing pwr); LGC mode avail Loss of gimbal & throttle capability (DPS start at max thrust) Loss of APS auto on Loss of LUNAR CONTACT Lt on pnl 3	Abort staging avail with CDR CB S/C: ABORT STAGE Note Des eng will shut down, but asc eng will not ignite until ENG ARM sw - ASC Loss of asc eng arm enable (ENG ARM sw avail) & time delay Loss of des eng override	Loss of auto AGS RCS firing Prim pwr provided with LMP ATCA cb Cannot sw from PGNS to AGS RCS firing unaffected in PGNS RGA cannot be tested	Loss of des eng override	Loss of CWEA Most malfunctions are monitored by MSFN via telemetry; some are monitored on cabin ind	Loss of approx 40 subsys sensors MSFN & vehicle: DES & ASC oxygen, oxid manifold, suit, cabin, & all DPS, APS, RCS pressure	Loss of telemetry to MSFN Loss of voice & data S-bd sub-carriers, Rng/Alt ind, emer key, inv timing, DSEA ind, & ATCA	Loss of ERA 2: (approx-half oper data)	Loss of torn suit protection

	PRIM S-BD						ECS									
A CR	VHF B RCVR	PWR AMPL	XMTR/RCVR	S-BD ANT	PMP	TV	DISP	GLYCOL PUMP SEC		LCG PUMP	CABIN FAN CONT	CABIN REPRESS	SUIT FAN 2	SUIT FAN ΔP	DIVERT VLV	CO_2 SENSOR
H A supply	Pwr to VHF B rcvr	Pwr to prim pwr supply in S-bd pwr ampl thru PWR AMPL sw	Pwr to prim pwr supply in S-bd xcvr thru XMTR/RCVR sw Pwr to PMP for emergency key & voice backup functions thru XMTR/ RCVR and PCM sw	Pwr to S-bd steerable ant	Pwr to PMP pwr supply Pwr to spacesuit biomed ckts thru BIOMED sw & umbilicals	Pwr to TV camera pwr supply	Pwr to all ECS ind	Pwr to backup glycol pump in coolant recirculation assy (Not normally used in flight, except in emergency or checkout modes)		Pwr to LCG pump	Turns off cabin fans when PRESS REG A or B in EGRESS	Pwr to CABIN REPRESS vlv & CABIN warn lt	Pwr to suit fan No. 2 (suit ckt assy) thru SUIT FAN sel	Pwr to fan ΔP sensor (ind function only)	Pwr to SUIT GAS DIVERTER vlv for auto closure caused by low cabin press or by PRESS REG A or B vlv - EGRESS	Pwr to CO_2 sensor
HF VHF	Loss of VHF ranging Loss of EVA data Loss of VHF B received voice	Loss of prim S-bd pwr ampl See pwr ampl avail	Loss of prim S-BD XCVR See S-BD xcvr avail See pwr to PMP avail	Loss of S-BD steerable ant S-BD comm thru omni ant avail	Loss of S-BD biomed, PCM, downlink voice, & EMU data, except emergency key & backup voice	Loss of TV camera	Loss of all ECS cabin ind	Loss of sec coolant loop		Loss of circulation thru LCG from LM	Loss of cabin fan auto shutoff Turn off fan by opening fan cb	Loss of auto cabin repress mode; manual mode avail Loss of indication of low cabin press (CABIN warn lt), CABIN PRESS ind avail	Loss of suit fan No. 2 In cabin mode, remove helmet & breath cabin air. After period of time, flush cabin air In egress mode PRESS REG A & B vlv - DIRECT O_2	Loss of indication for failure of suit fan No. 1 or 2	Loss of auto vlv closure; manual mode avail	Loss of CO_2 ind, CO_2 comp caut lt, & TM

LEGEND
- Designates DUAL POWER to funct...
- Designates SIMILAR functions
- Designates DIFFERENT functions

HEATERS				CAMR SEQ	EPS									CROSS TIE		BAT FEED TIE	
A/B-2 QUAD 3	QUAD 4	DISP	S-BD ANT		DISP	DC BUS VOLT	INV 2	ASC ECA	ASC ECA CONT	DES ECA	DES ECA CONT	XLUNAR BUS TIE	BUS	BAL LOADS		
Pwr to sys A/B-2 htr for each TCA of cluster 3 thru HTR CONT; RCS SYS A/B 2 QUAD 3 sw	Pwr to sys A/B-2 htr for each TCA of cluster 4 thru HTR CONT; RCS SYS A/B 2 QUAD 4 sw	Pwr to HTR CONT; TEMP ind	Pwr to S-bd ant htrs	Pwr to sequence camera	Pwr from LMP bus to AMPS & VOLTS ind, & to th	Pwr from LMP bus to IS, to DC BUS FAULT comp caut lt, & to monitor bus voltage for TM & warn lt	Pwr from LMP to inv No. 2 for generation of 115V, 400-cps, a-c pwr, thru INVERTER sw	Pwr from LMP bus to pwr supplies of both sec ECA's for current & reverse current ind & O/C protection	PWR from LMP bus to normal & backup main feed contactor coils in ECA No. 3 & 4 thru NORMAL FEED & BACK UP FEED sw to switch off sec bats Pwr to DES BATS sw	Pwr from LMP bus to pwr supplies of both des ECA'S for current & reverse current ind & O/C protection Pwr to relays for abort stage	Pwr from LMP bus to low & high voltage coils in ECA No. 1 & 2 thru HI VOLTAGE & LOW VOLTAGE sw Pwr to des bats lv/hv off & deadface relay reset for abort stage	Connects LMP neg bus to neg lunar bus for LM ground	Backup cb	Connects LMP bus to CDR bus thru CDR CROSS TIE cb During bat 6 backup also connects bat No. 6 to LMP d-c bus	Connects bat No. 2 or lunar bat, & bat No. 1 & 5 to LMP d-c bus	Redundant cb
Loss of set of htrs in cluster 3 (sys A/B-1 htrs avail; longer warmup required)	Loss of set of htrs in cluster 4 (sys A/B-1 htrs avail; longer warmup required)	Loss of onboard monitoring of temp of RCS cluster, LR, RR temp, & S-BD ant	If S-bd ant temp below min survival temp, permanent degradation results	Loss of sequence camera	Loss of onboard bus & bat monitoring	Loss of monitoring of LMP bus	Inv No. 1 avail thru INVERTER sw (Pwr from CDR bus to inv No. 1)	Redundant cb on CDR panel supplies pwr from CDR bus	Redundant cb on CDR panel supplies pwr from CDR bus	Redundant cb on CDR panel supplies pwr from CDR bus	Redundant cb on CDR panel supplies pwr from CDR bus	No loss of function; relay contacts in parallel with cb	Only closed in event of feeder short when powering LMP bus thru CDR bus, or vice versa	BUS CROSS TIE cb avail	Adjacent cb avail	Adjacent cb avail

Figure 3-3. Circuit Breaker Functions (Sheet 5 of 5)

16 C

	DISP	SE AUDIO	VHF A XMTR	VHF B RCVR	PRIM S-BD: PWR AMPL	PRIM S-BD: XMTR/RCVR	S-BD ANT	PMP	TV	DISP	GLYCOL PUMP SEC		LCG PUMP	CA
FUNCTIONS POWERED THRU CB	Pwr to COMM ANT: PITCH, YAW, & SIGNAL STRENGTH ind	Pwr to LMP audio center	Pwr to VHF A xmtr pwr supply	Pwr to VHF B rcvr	Pwr to prim pwr supply in S-bd pwr ampl thru PWR AMPL sw	Pwr to prim pwr supply in S-bd xcvr thru XMTR/RCVR sw Pwr to PMP for emergency key & voice backup functions thru XMTR/ RCVR and PCM sw	Pwr to S-bd steerable ant	Pwr to PMP pwr supply Pwr to spacesuit biomed ckts thru BIOMED sw & umbilicals	Pwr to TV camera pwr supply	Pwr to all ECS ind	Pwr to backup glycol pump in coolant recirculation assy (Not normally used in flight, except in emergency or checkout modes)		Pwr to LCG pump	Turns when I A or B
EFFECT OF CB OPENING (LOSS OF/OR REMAINING FUNCTION)	Loss of S-bd ant pitch & yaw position indications & S-bd received signal strength indication	Loss of relay mode: LMP must use CDR audio center Loss of INSCA and VHF-A XMTR	Loss of VHF ranging & VHF A voice	Loss of VHF ranging Loss of EVA data Loss of VHF B received voice	Loss of prim S-bd pwr ampl See pwr ampl avail	Loss of prim S-BD XCVR See S-BD xcvr avail See pwr to PMP avail	Loss of S-BD steerable ant S-BD comm thru omni ant avail	Loss of S-BD biomed, PCM, downlink voice, & EMU data, except emergency key & backup voice	Loss of TV camera	Loss of all ECS cabin ind	Loss of sec coolant loop		Loss of circulation thru LCG from LM	Loss o auto sh Turn o opening

16 D

	MESA	HEATERS: RCS SYS A/B-2: QUAD 1	QUAD 2	QUAD 3	QUAD 4	DISP	S-BD ANT	CAMR SEQ	DISP	DC BUS VOLT	INV 2	ASC ECA	ASC ECA CONT	
FUNCTIONS POWERED THRU CB	Pwr to six htrs on MESA	Pwr to sys A/B-2 htr for each TCA of cluster 1 thru HTR CONT: RCS SYS A/B 2 QUAD 1 sw	Pwr to sys A/B-2 htr for each TCA of cluster 2 thru HTR CONT: RCS SYS A/B 2 QUAD 2 sw	Pwr to sys A/B-2 htr for each TCA of cluster 3 thru HTR CONT: RCS SYS A/B 2 QUAD 3 sw	Pwr to sys A/B-2 htr for each TCA of cluster 4 thru HTR CONT: RCS SYS A/B 2 QUAD 4 sw	Pwr to HTR CONT, TEMP ind	Pwr to S-bd ant htrs	Pwr to sequence camera	Pwr from LMP bus to AMPS & VOLTS ind, & to th	Pwr from LMP bus to IS, to DC BUS FAULT comp cmnt lt, & to monitor bus voltage for TM & warn lt	Pwr from LMP to inv No. 2 for generation of 115V, 400-cps, a-c pwr, thru INVERTER sw	Pwr from LMP bus to pwr supplies of both asc ECA's for current & reverse current ind & O/C protection	PWR from LMP bus to norm & backup main feed contactor coils in ECA No. 3 & 4 thru NORMAL FEED & BACK UP FEED sw to switch off asc bats Pwr to DES BATS sw	Pwr froc pwr supp des ECA & revers & O/C pr Pwr to r stage
EFFECT OF CB OPENING (LOSS OF/OR REMAINING FUNCTION)	Loss of htrs with possible degradation of items requiring temp stabilization	Loss of set of htrs in cluster 1 (sys A/B-1 htrs avail; longer warmup required)	Loss of set of htrs in cluster 2 (sys A/B-1 htrs avail; warmup required)	Loss of set of htrs in cluster 3 (sys A/B-1 htrs avail; longer warmup required)	Loss of set of htrs in cluster 4 (sys A/B-1 htrs avail; longer warmup required)	Loss of onboard monitoring of temp of RCS cluster, LR, RR temp, & S-BD ant	If S-bd ant temp below min survival temp, permanent degradation results	Loss of sequence camera	Loss of onboard bus & bat monitoring	Loss of monitoring of LMP bus	Inv No. 1 avail thru INVERTER sw (Pwr from CDR bus to inv No. 1)	Redundant cb on CDR panel supplies pwr from CDR bus	Redundant cb on CDR panel supplies pwr from CDR bus	Redundan CDR pan from CDI