Schmitt

NATIONAL AERONAUTICS AND SPACE ADMINISTRATION

FLIGHT MISSION RULE RATIONALE DOCUMENT

APOLLO 14

(AS-509/110/LM-8)

DECEMBER 15, 1970

COORDINATED AND PUBLISHED BY

FLIGHT CONTROL OPERATIONS BRANCH

MANNED SPACECRAFT CENTER
HOUSTON, TEXAS

PART I INTRODUCTION
PART II 1 FLIGHT OPERATIONS
2 GROUND SUPPORT INST/COMM
3 TRAJECTORY AND GUIDANCE
4 SLV SYSTEMS
5 CSM SYSTEMS
6 LM SYSTEMS
7 SPACE ENVIRONMENT
8 LANDING AND RECOVERY
9 AEROMEDICAL
10 LUNAR SURFACE
APPENDIX A DISTRIBUTION LIST

INDEXING DATA

DATE	OPR	#	T	PGM	SUBJECT	SIGNATOR	LOC
12-15-70	MSC		R	APO	[(title)]	MSC	079-415

FLIGHT MISSION RULE RATIONALE DOCUMENT

DECEMBER 15, 1970

PREFACE

THIS DOCUMENT IS COMPILED BY THE FLIGHT CONTROL OPERATIONS BRANCH (FCOB), FLIGHT CONTROL DIVISION, MANNED SPACECRAFT CENTER, HOUSTON, TEXAS. IT IS A COMPLEMENTARY DOCUMENT TO THE FLIGHT MISSION RULES WHICH IS A COLLECTION OF RATIONALE, HISTORY, AND SUPPORT DATA DESCRIBING OR JUSTIFYING THE MISSION RULES.

COMMENTS CONCERNING THE CONTENTS OF THIS DOCUMENT SHOULD BE DIRECTED TO MR. BARRY M. WOLFER, FCOB (FC2), 483-3838.

THIS DOCUMENT IS NOT TO BE REPRODUCED WITHOUT THE WRITTEN APPROVAL OF THE CHIEF, FLIGHT CONTROL DIVISION, MANNED SPACECRAFT CENTER, HOUSTON, TEXAS.

APPROVED BY---

EUGENE F. KRANZ
CHIEF, FLIGHT CONTROL DIVISION

R ITEM

CONTENTS

		PAGE
I.	INTRODUCTION	
	A. PURPOSE	1
	B. RESPONSIBILITY	1
	C. ORGANIZATION	1
II.	SECTIONS	1
	1 FLIGHT OPERATIONS	1-1
	2 GROUND SUPPORT INSTRUMENTATION/COMMUNICATIONS	2-1
	3 TRAJECTORY AND GUIDANCE	3-1
	4 SLV SYSTEMS	4-1
	5 CSM SYSTEMS	5-1
	6 LM SYSTEMS	6-1
	7 SPACE ENVIRONMENT	7-1
	8 LANDING AND RECOVERY	8-1
	9 AEROMEDICAL	9-1
	10 LUNAR SURFACE	10-1
	APPENDIX A - DISTRIBUTION LIST	A-1

PART I
INTRODUCTION

R	ITEM

A. PURPOSE

THE FLIGHT MISSION RULE RATIONALE DOCUMENT CONTAINS EXPLANATORY DATA THAT ALLOWS THE MISSION RULES TO BE SIMPLE STATEMENTS OF CONDITIONS/MALFUNCTIONS AND A BRIEF RESULTANT ACTION RATHER THAN LENGTHY PROCEDURAL DESCRIPTIONS. THE RATIONALE ALSO PROVIDES A DOCUMENTED COMPILATION OF SYSTEM DATA PERTINENT TO NON-NOMINAL SITUATIONS OR ALTERNATE MISSION PLANS. GENERAL PROCEDURES FOR THE DEVELOPMENT OF THE FLIGHT MISSION RULE RATIONALE DOCUMENT ARE CONTAINED IN SECTION 3 OF THE MISSION RULE PREPARATION DOCUMENT.

B. RESPONSIBILITY

THE DIRECTOR OF FLIGHT OPERATIONS, MSC, HOUSTON, TEXAS, HAS THE OVERALL RESPONSIBILITY FOR THE PREPARATION, CONTENTS AND CONTROL OF THE FLIGHT MISSION RULE RATIONALE DOCUMENT. IN ORDER TO ASSIST THE DIRECTOR OF FLIGHT OPERATIONS IN THIS TASK, THE CHIEF, FCOB, HAS BEEN DESIGNATED AS THE SINGLE POINT OF CONTACT AT THE MSC FOR FLIGHT MISSION RULE RATIONALE. AS THE SINGLE POINT OF CONTACT, FCOB IS THE CENTRAL COORDINATING AGENCY AND CONTROLS THE FLIGHT MISSION RULE RATIONALE DURING THE PUBLICATION PHASE ONLY. SINCE THE RULES CONTINUOUSLY CHANGE, NOT ALL RATIONALE CONFORMS TO RULES AS THEY EXIST AT PRESENT. HOWEVER, IN GENERAL, THE RATIONALE IS COMPATIBLE WITH EXISTING RULES. THIS DOCUMENT WILL NOT BE UPDATED.

C. ORGANIZATION

THE FLIGHT MISSION RULE RATIONALE DOCUMENT IS SUBDIVIDED INTO TEN BASIC SECTIONS. EACH SECTION IS ORGANIZED SO THAT SUBGROUPINGS OF A SECTION FALL IN THE SAME ORDER AS THE APPLICABLE PARTS OF THE FLIGHT MISSION RULES DOCUMENT.

PART II
1 FLIGHT
OPERATIONS

R	ITEM	
	2-1	PRELAUNCH A. THE LAUNCH AZIMUTH CONSTRAINT OF 72 DEG IS AN ARBITRARY LIMIT WHICH PROVIDES GOOD PERFORMANCE RESERVES AND MSFN COVERAGE. THE CONSTRAINT FOR 96 DEG IS AN FOD LIMIT TO ALLOW ACCEPTABLE MSFN COVERAGE THROUGH INSERTION. B. A LAND LANDING WITH A HORIZONTAL COMPONENT GREATER THAN 54 FPS AT IMPACT IS CONSIDERED TO BE HAZARDOUS TO CREW SAFETY. C. LAUNCH COVERAGE THROUGH INSERTION IS REQUIRED FOR GROUND MONITORING FOR ABORT SITUATIONS. COVERAGE FROM INSERTION TO INSERTION PLUS 60 SECONDS IS REQUIRED FOR VOICE COORDINATION OF POST-INSERTION GO/NO-GO, MODE IV ABORTS, AND APOGEE KICK MANEUVERS.
	2-2	LAUNCH A LAUNCH ABORT IS MORE HAZARDOUS TO THE CREW THAN A REENTRY. THE LANDING POINT CAN BE SELECTED FOR A REENTRY BUT CANNOT ALWAYS BE SELECTED FOR AN ABORT.
	2-3	EARTH ORBIT NO RATIONALE REQUIRED.
	2-11	TRANSLUNAR INJECTION A.1 (A) CREW SAFETY CONSIDERATION (B) IF THERE IS ANY FINITE PROBABILITY OF ACHIEVING A LUNAR LANDING MISSION, TLI WILL BE ATTEMPTED. THIS PHILOSOPHY IS BASED ON THOSE SLV PROBLEMS WHICH MAY DEGRADE SLV PERFORMANCE BUT HAVE NO ADVERSE IMPACT ON CREW SAFETY. PRIOR TO TLI IF IT IS CLEAR THAT A LUNAR LANDING MISSION IS NOT POSSIBLE, TLI WILL NOT BE PERFORMED BECAUSE OF A RISK VS GAIN EVALUATION. A.2 THE TLI COMMITS THE CSM TO A LONG RETURN TIME AND/OR A LARGE ABORT MANEUVER-- THEREFORE, THE CSM SHOULD HAVE REDUNDANCY IN ALL SYSTEMS BEFORE SUCH A COMMITMENT. B. WE DO NOT WANT TO CHANCE COMMITTING TO TLI WITH A BAD SYSTEM FOR THE REASONS STATED IN A.2, BUT WE DESIRE TO TAKE ADVANTAGE OF EVERY OPPORTUNITY TO ACHIEVE A LUNAR MISSION. THE TLI TARGETING IN THE IU IS SET UP TO ACCOMMODATE THE SECOND AND THIRD REV OPPORTUNITIES. AN EXCEPTION TO THIS RULE IS CREW TAKEOVER FOR A SATURN GUIDANCE REFERENCE FAILURE.
	2-12	TD&E A. THE RISK OF CM DECOMPRESSION IS CONSIDERED ACCEPTABLE TO RETRIEVE THE LM. B. AN UNACCEPTABLE CREW RISK EXISTS IN PERFORMING A STAGING SEQUENCE OFF OF THE CSM/LM/S-IVB. IT CANNOT BE DETERMINED, TO AN ACCEPTABLE LEVEL, WHAT THE DESCENT STAGE WILL DO UNDER THESE CIRCUMSTANCES, AND IF IT DID SEPARATE FROM THE S-IVB, AN EXTREMELY HAZARDOUS RECONTACT CONDITION WOULD EXIST.

R	ITEM	
	2-13	TRANSLUNAR COAST A. NO RATIONALE REQUIRED. B. IF SOME CONSUMABLE HAS DECREASED SO THAT A CIRCUMLUNAR EARTH RETURN PLUS A 12-HOUR PAD CANNOT BE SATISFIED, FLEXIBILITY IS DIMINISHED AND A SHORTER RETURN SHOULD BE SELECTED, THE 12-HOUR PAD IS BASED ON THE TIME REQUIRED TO MOVE THE LANDING POINT FROM ONE OCEAN TO THE OTHER. C. NO RATIONALE REQUIRED. D. THE HYBRID TRAJECTORY FOR THIS MISSION WAS DESIGNED TO SET UP CERTAIN CONDITIONS FOR LUNAR ORBIT OPERATIONS (LIGHTING AT TOUCHDOWN, 210-FT SITE COVERAGE, AND DPS ABORT CAPABILITY). IF LOI CANNOT BE ACCOMPLISHED, THERE IS NO REASON TO GO OFF A FREE RETURN TRAJECTORY. E. NO RATIONALE REQUIRED
	2-14	LUNAR ORBIT INSERTION A. WE DO NOT WANT TO LEAVE THE FREE RETURN TRAJECTORY AND SPEND TIME IN LUNAR ORBIT IF ONE MORE FAILURE COULD BE CATASTROPHIC OR A SAFE POWER LEVEL OF 40 AMPS COULD NOT BE MAINTAINED DURING TLC. B. IT IS PREFERABLE TO GO INTO LUNAR ORBIT AND ACCOMPLISH MINIMAL OBJECTIVES AS OPPOSED TO INHIBITING LOI BECAUSE THE NOMINAL MISSION CANNOT BE PERFORMED. C. NO RATIONALE REQUIRED. D. NO RATIONALE REQUIRED. E. A DPS MANEUVER IS AN ACCEPTABLE WAY OF ACHIEVING LUNAR ORBIT TO ACCOMPLISH LANDING SITE PHOTOGRAPHY OBJECTIVES.
	2-15	LUNAR ORBIT A THROUGH E. NO RATIONALE REQUIRED. F. THIS RESERVES THE SPS BACKUP FOR THE TEI THUS PROVIDING REDUNDANT PROPULSION SYSTEMS FOR TEI.
	2-16	INTRAVEHICULAR TRANSFER THE RISK INVOLVED IN A HARDSUIT IVT IS CONSIDERED ACCEPTABLE TO SAVE THE MISSION.
	2-17	DOCKED LM OPERATION NO RATIONALE REQUIRED.

R	ITEM	
	2-21	CSM/LM UNDOCKING AND SEPARATION A. INDEPENDENT CAPABILITY IS REQUIRED TO PREVENT THE NEED FOR AN EVT IN CASE EITHER VEHICLES DOCKING CAPABILITY IS LOST. B. EVT CAPABILITY IS REQUIRED TO GUARANTEE THAT THE LM CREWMEN CAN RETURN TO THE CSM EVEN THOUGH THE LM AND CSM CANNOT REDOCK FOR ANY REASON. C. CREWMEN MUST REMAIN SUITED IN CASE THE NOMINAL MISSION IS ABORTED AND RENDEZVOUS AND DOCKING IS REQUIRED IN A HURRY WITH THE RESULTANT PRESSURE VESSEL INTEGRITY HAZARDS, THE CREWMEN ARE NOT REQUIRED TO WEAR HELMENTS AND GLOVES. D. VHF VOICE BETWEEN LM AND CSM IS REQUIRED TO PROVIDE COMMUNICATION FOR OPERATIONS OCCURRING BEHIND THE MOON WHEN MSFN RELAY IS NOT AVAILABLE.
	2-22	CSM LUNAR ORBIT UNDOCKED A.1, IF REDUNDANCY IS LOST IN CRITICAL CSM SYSTEMS (LIFE SUPPORT, SPS PROPULSION AND GUIDANCE), A.2 THE REMAINING CAPABILITY SHOULD BE USED TO RENDEZVOUS AND RETURN TO EARTH RATHER THAN COMMIT TO LANDING. IF LM RESCUE CAPABILITY IS LOST PRIOR TO CSM CIRCULARIZATION THE CSM SHOULD NOT DO THE CIRCULARIZATION BURN, AND PUT THE VEHICLES INTO A RENDEZVOUS AND REDOCKING SITUATION. B. FOR CSM FAILURES IN THIS PERIOD, THE MOST TIME THAT COULD BE SAVED BY ABORTING IS TWO HOURS AND A RENDEZVOUS IS ALREADY REQUIRED. ALSO, CONTINUING KEEPS THE MISSION ON THE NOMINAL TIMELINE WHICH IS EASIER TO PERFORM THAN A LM ABORT. C. THE RISK OF CONTINUING THE LUNAR STAY WITH LOSS OF REDUNDANCY IN THE CSM IS NOT CONSIDERED WORTH THE GAIN.
	2-24	LM POI THE LM WILL NOT BE ALLOWED TO START POWERED DESCENT KNOWING THAT IT WILL NOT BE POSSIBLE TO PERFORM A LUNAR LANDING WITH EVA. THE PRIME OBJECTIVES ON THE H-2 MISSION CONCERN ACTIVITIES ON THE LUNAR SURFACE AND IF THESE OBJECTIVES CANNOT BE MET, THE GAIN IN PERFORMING A LUNAR LANDING IS NOT WORTH THE RISK.
	2-25	LM POWERED DESCENT A. EARLY IN POWERED DESCENT, THE DPS WITH ITS REMAINING CONSUMABLES CAN BE RETAINED THROUGH INSERTION. HOWEVER, FROM A CONSUMABLES LIFETIME STANDPOINT, IT IS DESIRABLE TO CONTINUE THE POWERED DESCENT TO PDI + 6+30 IN ORDER TO ACHIEVE A RENDEZVOUS TIME WHICH IS TWO HOURS SHORTER. B. DURING THIS TIME PERIOD, THERE IS NO TIME ADVANTAGE TO ABORTING EARLY AND IT IS PREFERABLE TO STICK TO THE NOMINAL TIMELINE IF POSSIBLE.

R	ITEM	
	2-26	LM LUNAR STAY

A. AN ANYTIME LIFTOFF COULD RESULT IN LARGE PHASING ANGLES AND REQUIRE EXCESSIVE AMOUNTS OF TIME TO RENDEZVOUS. THEREFORE, UNLESS THE CAPABILITY TO GET INTO ORBIT IS BEING LOST, IT IS BETTER TO WAIT AND LIFTOFF WITH THE PROPER PHASING.

B. THE CAPABILITY REMAINING SHOULD BE USED TO RETURN TO THE CSM RATHER THAN CONTINUE THE MISSION. THE GAIN OF CONTINUING, DURING LUNAR STAY WITHOUT REDUNDANCY, IS NOT CONSIDERED WORTH THE RISK.

2-27 EVA

A. REQUIRED FOR CREW SAFETY. EVA/MSFN VOICE IS REQUIRED FOR ADVISING THE CREW OF LM SYSTEMS STATUS.

B. REQUIRED FOR CREW SAFETY.

C. REQUIRED FOR CREW SAFETY. 1 KM CONSTRAINT ON THE OPS OPERATIONAL RADIUS IS BASED ON THE HEAT STORAGE CONSTRAINT ON THE CREWMAN. THE 3 KM BSLSS OPERATIONAL RADIUS IS BASED ON OPS 02 CONSUMABLE CONSTRAINT FOR LOW PURGE FLOW.

D. COMMUNICATIONS BETWEEN ONE EVA CREWMAN AND MSFN IS REQUIRED FOR REPORT OF LM STATUS AND FOR EVALUATION OF PLSS STATUS.

E. THIS ORDER OF EGRESS/INGRESS WILL ASSURE THE CDR WILL BE IN THE LEFT POSITION AND THE LMP IN THE RIGHT POSITION FOR ASCENT.

F. THE EVA CREWMAN MUST BE ABLE TO INGRESS RAPIDLY. THE TROUBLE SHOOTING, REQUIRING THE PRESSURIZATION, COULD RESULT IN A SUIT PROBLEM REQUIRING A PRESSURIZED CABIN BE RETAINED.

G. REQUIRED FOR CREW SAFETY.

H. A 1000 FT LIMITATION FOR 1 MAN EVA WILL SATISFY THE REQUIREMENT FOR ALSEP DEPLOYMENT.

I. TWO LIFE SUPPORT SYSTEMS ARE MANDATORY TO SUPPORT A CEVT SHOULD CSM/LM DOCKING NOT BE ACCOMPLISHED.

J. MAINTAIN BACKUP OPERATIONAL CAPABILITY TO RETURN TO THE LM SHOULD THE PLSS FAIL.

K. THE CAPABILITY TO ASCEND WITH THE PLSS ONBOARD IS REQUIRED SHOULD AN ASAP ASCENT BE REQUIRED OR SOME PROBLEM ARISE PRECLUDING CABIN DEPRESS.

L. TWO GROUND COMMANDS ARE REQUIRED TO FIRE THE ASE MORTER, HOWEVER, THIS IS CONSISTENT WITH GOOD OPERATIONAL PRACTICE.

2-28 ASCENT

IT IS NOT CRITICAL THAT ASCENT BE ACCOMPLISHED ON THE NOMINAL ASCENT REV. IF A SYSTEM CRITICAL FOR ASCENT IS LOST IT IS PREFERABLE TO DELAY ASCENT TO OBTAIN FULL SYSTEMS CAPABILITY.

R	ITEM	
	2-29	RENDEZVOUS A.B THE LM ACTIVE RENDEZVOUS IS THE PRIME METHOD AND IS KNOWN BEST. ALSO, IT IS BETTER TO USE THE LM PROPULSION CONSUMABLES AS LONG AS POSSIBLE AND CONSERVE THE CSM PROPELLANTS. IF PLANE ERRORS WILL EXIST AT INSERTION, IT IS PREFERABLE TO PERFORM THE LONG RNDZ TO ALLOW TIME FOR A MANEUVER TO CORRECT THE PLANE ERROR.
	2-30	RETENTION OF THE LM ASE STAGE IF CRITICAL CSM SYSTEM REDUNDANCY IS LOST, CONSIDERATION WILL BE GIVEN TO RETAINING THE LM ASC STAGE TO PROVIDE THIS REDUNDANCY. THE DELTA VELOCITY RESERVED FOR WEATHER AVOIDANCE MAY BE UTILIZED TO RETAIN THE NONIMAL RETURN TIME WITH THE ASC STAGE ATTACHED.
	2-31	TRANSEARTH COAST A. TO LESSEN THE POSSIBILITY OF A CM SKIPOUT OR TO PROVIDE CREW MINIMUM G LOADS. B. IT IS CONSIDERED SAFER TO GO INTO THE CONDITIONS ESTABLISHED THAN TO PERTURB THE TRAJECTORY AFTER EI - 24 HOURS. C. THE EARLIER THE MIDCOURSE CORRECTION THE LESS THE CORRECTION HAS TO BE AND THE MORE EFFICIENT IT IS. D. SPS CONSUMABLES MAY BE USED FOR MCC S IF THE SM RCS CONSUMABLES BECOME CRITICAL.
	2-32	ALTERNATE MISSION A. E.O. IF A TLI IS NOT PERFORMED A HIGH INCLINATION E.O. MISSION WILL BE DONE TO OBTAIN PHOTOGRAPHS FOR EARTH RESOURCE PURPOSES. B. L.O. AN LOI WILL BE PERFORMED THOUGH NO LANDING IS POSSIBLE TO OBTAIN DESCARTES PHOTOGRAPHY. C. THE FIRST ORDER OF PRIORITY IN RETAINING OR JETTISIONING THE LM IS TO EVALUATE ITS USEFULNESS IN PROIVIDING CRITICAL CAPABILITY THAT MAY BE LOST IN THE CSM. IF A DPS TEI IS NOT TO BE PERFORMED THE LM SHOULD BE IMPACTED ON THE LUNAR SURFACE TO PREVENT POTENTIAL COLLISION PROBLEMS IN FUTURE MISSION. IF THE LM IS RETAINED FOR TEI, THE PREFERED METHOD OF DISPOSAL IS OCEAN IMPACT TO PLACE THE RTG/ POSSIBLE LM FRAGMENTS FROM IMPACTING NEAR POPULATED LAND AREAS. THE THIRD CHOICE, REMIAN IN LO., WILL EXIST IF IMPACT IS NOT POSSIBLE. NO CONSIDERATION WILL BE GIVEN TO BRINGING THE LM BACK AT TEI TO SATISIFY A PREFERENCE TO ACCOMPLISH AN OCEAN IMAPCT. THE RETURN TIME AND UNIQUE PROCEDURES REQUIRED WOULD PROHIBIT THIS.

2 GROUND
SUPPORT
INST/COMM

R	ITEM	
	4-2A	CONSOLE TELEMETRY DISPLAYS ARE MANDATORY FOR THE DISPLAY TO F/C'S OF MANDATORY S/V PARAMETERS.
	4-2B	ONE PCM GROUND STATION IS REQUIRED TO DRIVE THE STRIP CHART RECORDERS WHICH DISPLAY MANDATORY S/V ANALOGS AND EVENTS.
	4-4A1	ONE INDEPENDENT TRACKING SOURCE IS REQUIRED FOR REAL TIME VERIFICATION OF L/V NAVIGATION AND FOR PROTECTION AGAINST VIOLATION OF THE LAUNCH ENVELOPE.
	4-4A2	BOTH IU AND CMC TELEMETRY VECTORS ARE REQUIRED TO INSERTION PLUS 60 SECONDS FOR DETERMINATION OF THE TRAJECTORY AND ORBIT. AN ORBIT GO/NO GO WILL BE MADE BASED ON THIS DATA.
	4-4B	RTCC DATA SELECT CAPABILITY IS MANDATORY FOR SELECTION OF THE BEST AVAILABLE DATA SOURCE FOR PROCESSING.
	4-5A	EITHER THE FD LOOP OR AFD CONF LOOP IS MANDATORY FOR USE AS THE PRIME MCC INHOUSE VOICE LOOP FOR MISSION CONTROL.
	4-5B	ACCESS TO AT LEAST ONE OF THE PRIME OIS CONTROL CIRCUITS IS MANDATORY FOR COORDINATION OF THE TERMINAL COUNT MCC-PAD ACTIVITIES.
	4-5C	ONE DIRECT VOICE CIRCUIT TO THE RSO IS REQUIRED FOR TRAJECTORY VERIFICATION AND BOOSTER SAFING.
	4-5E	ONE A/G PATH VIA GSFC IS REQUIRED TO ALL LAUNCH PHASE REMOTED SITES AND TO AT LEAST TWO REMOTED SITES PER REVOLUTION THROUGH REV 3 FOR VOICE COMMUNICATION WITH THE FLIGHT CREW.
	4-6A	ONE IBM 360/75 IS MANDATORY TO PERFORM AS THE MOC FOR THE PROCESSING OF MANDATORY S/V PARAMETERS AND TRAJECTORY DATA.
	4-6C	ONE UNIVAC 494 IS MANDATORY ONLINE TO THROUGH PROCESS MANDATORY S/V PARAMETERS TO THE MOC.
	4-7	ONE MITE SYSTEM IS MANDATORY AS THE MASTER MCC TIMING STANDARD TO SUPPORT MANDATORY RTCC/CCATS COMPUTERS.
	4-8A	BUS A1 IS MANDATORY TO PROVIDE UNINTERRUPTABLE POWER FOR THE D/TV CONVERTERS.
	4-8B	BUS A2 IS MANDATORY TO PROVIDE UNINTERRUPTABLE POWER FOR THE D/TV DATA DISTRIBUTORS AND 20 SECONDS INTERRUPTABLE POWER FOR THE VSM.

R	ITEM	
	4-8D	BUS B2 IS MANDATORY TO PROVIDE 20 SECONDS INTERRUPTABLE POWER FOR MOCR AND SSR CONSOLES.
	4-9A	TEN D/TV CHANNELS ARE MANDATORY TO PROVIDE DISPLAYS TO MOCR F/C'S OF MANDATORY S/V PARAMETERS DURING THE LAUNCH PHASE.
	4-9B1	THE FDO LAUNCH DIGITALS ARE MANDATORY ON D/TV FOR CONTINGENCY ORBIT INSERTION MANEUVER DATA AND MONITORING OF TFF LIMITS.
	4-9B2	THE GAMMA VS. V PLOT IS MANDATORY ON AT LEAST ONE DISPLAY SYSTEM TO PROVIDE FDO THE NECESSARY INFORMATION REQUIRED TO CALL ABORTS BASED ON LV BREAKUP.
	4-9B3	THE RFO LAUNCH DIGITALS ARE MANDATORY ON D/TV TO PROVIDE A MONITOR FOR MODE III AND MODE IB MANEUVER DATA.
	4-9B4	DISPLAY OF THE GAMMA (EI) VS. V(EI) PLOT IS MANDATORY TO MONITOR FOR G-LIMIT VIOLATIONS DURING LAUNCH OR ABORT.
	4-9B1	DISPLAY OF THE INSERTION/INJECTION DIGITALS ON THE D/TV IS MANDATORY TO PROVIDE A BASIS FOR MAKING A GO/NO GO DECISION ON THE CSM G&N.
	4-9D	THE VSM IS MANDATORY TO PROVIDE REQUIRED D/TV OPERATION.

R	ITEM	
	4-10A	ONE GSFC UNIVAC 494 COMMUNICATIONS PROCESSOR IS MANDATORY TO THROUGH PROCESS MANDATORY S/V PARAMETERS TO THE MCC CCATS.
	4-10B	ONE WBD (50.0 KBPS) LINE IS MANDATORY BETWEEN GSFC AND MCC FOR THE TRANSMISSION OF MANDATORY S/V PARAMETERS.
	4-10C	ONE INCOMING (JJ) TTY CIRCUIT FROM GSFC TO MCC IS MANDATORY FOR THE TRANSMISSION OF LOW-SPEED RADAR DATA.
	4-11B	ONE SOURCE OF RECEIVING USB TM IS MANDATORY TO PROVIDE MANDATORY CSM PARAMETERS.
	4-12B	IU CCS (DP-1B) OR IU VHF (DP-1) TELEMETRY IS MANDATORY TO MONITOR SIVB BULKHEAD DELTA PRESSURE FOLLOWING S/C SEPARATION DURING TD&E. CSM USB TELEMETRY IS MANDATORY FOR ABORT CUES TO MCC FROM LIFTOFF THROUGH S-IVB CUTOFF PLUS 60 SEC.
	4-12D	VHF OR USB A/G VOICE IS MANDATORY FOR MCC ABORT CUES THROUGH INSERTION PLUS 60 SECONDS.
	4-13B	ONE IU TM DOWNLINK IS REQUIRED TWICE PER REVOLUTION THROUGH REV 3 TO PROVIDE SIVB SYSTEMS DATA TO SUPPORT A TLI GO/NO GO. CSM USB TM IS MANDATORY TWICE PER REVOLUTION THROUGH REV 3 TO PROVIDE CSM SYSTEMS DATA TO SUPPORT A TLI GO/NO GO.
	4-13C	USB TRACKING CAPABILITY AT AT LEAST TWO MSFN STATIONS PER REVOLUTION IS REQUIRED THROUGH REV 3 TO PROVIDE A TRAJECTORY BASE FOR TLI MANEUVER PLANNING.
	4-13D	A/G COMMUNICATIONS (VHF OR USB) AT TWO MSFN STATIONS PER REVOLUTION IS REQUIRED THROUGH REV 3 TO PROVIDE CAPABILITY TO ALERT CREW OF PROBLEMS AFFECTING CREW SAFETY.
	4-14 A&B	CCS TELEMETRY IS MANDATORY TO DETERMINE VEHICLE STATUS BEYOND VHF RANGE DURING POST S/C SEPARATION. CCS COMMAND IS MANDATORY TO PROVIDE CORRECTIVE CAPABILITY FOR AN SIVB BULKHEAD DELTA PROBLEMS DURING TD&E.
	4-15 A,B&C	CSM USB TELEMETRY, TRACKING, AND VOICE SUPPORT MUST BE AVAILABLE AT TWO 85 FOOT STATIONS TO PROVIDE MANDATORY SUPPORT DURING TLC AND LPO.

R	ITEM
	20-1A

BASELINE REQUIREMENT (ALL PHASES EXCEPT LAUNCH)

1. TWO-WAY VOICE COMMUNICATIONS BETWEEN SPACECRAFT.

A. DEFINITION OF LOSS

TWO-WAY SPACECRAFT TO SPACECRAFT VHF VOICE COMMUNICATIONS IS CONSIDERED LOST WHEN NO TWO-WAY VOICE COMMUNICATIONS BETWEEN SPACECRAFT CAN BE OBTAINED IN ANY OF THE FOUR VHF VOICE CONFIGURATIONS.

B. GENERAL OPERATIONAL IMPACT

LOSS OF TWO-WAY VHF VOICE COMMUNICATIONS BETWEEN SPACECRAFT MEANS THAT SPACECRAFT TO SPACECRAFT COMMUNICATIONS IS LIMITED TO THOSE PERIODS WHEN BOTH SPACECRAFT ARE IN LINE OF SIGHT OF THE MSFN AND MSFN RELAY CAN BE PERFORMED. IN ADDITION, IF THE TOTAL LM VHF SYSTEM FAILS, TWO-WAY VOICE COMMUNICATIONS WITH AN EVA WILL NOT BE POSSIBLE.

C. SPECIFIC OPERATIONS IMPACT (REFERENCE SPECIFIC MISSION RULE 20-13)

(1) NOMINAL MISSION

(A) UNDOCKING AND PRE-PDI - LOSS OF VHF VOICE BETWEEN SPACECRAFT LIMITS CREW COORDINATION TO THOSE PERIODS WHEN BOTH SPACECRAFT ARE IN MSFN LINE OF SIGHT. SINCE CREW COORDINATION PLAYS A LARGE PART IN PERFORMING A RENDEZVOUS, WE WILL NOT COMMIT TO A RENDEZVOUS WITHOUT THE CAPABILITY TO PERFORM THIS COORDINATION. HOWEVER, AFTER PERFORMING A MANEUVER THAT COMMITS THE LM TO A RENDEZVOUS, THE LOSS OF VHF COMMUNICATION BETWEEN THE SPACECRAFT IS NOT SUFFICIENT JUSTIFICATION FOR MISSION TERMINATION.

(B) POWERED DESCENT - VEHICLE TO VEHICLE COMMUNICATIONS ARE NOT CRITICAL TO COMPLETING A LANDING OR PERFORMING A SAFE ABORT FROM POWERED DESCENT.

(C) LUNAR STAY - SINCE THE NORMAL LUNAR STAY COMMUNICATIONS CONFIGURATION IS MSFN RELAY, THE LUNAR STAY NEED NOT BE ABORTED. DEPENDING ON THE VHF FAILURE MODE, EVA ACTIVITIES MAY STILL BE POSSIBLE.

(D) EVA - FOR A TWO-MAN EVA, VHF VOICE BETWEEN ONE EVA CREWMAN AND THE LM IS NECESSARY FOR EVA TO MSFN AND MSFN TO EVA COMMUNICATIONS. THIS LINK ENABLES THE GROUND CONTROLLERS TO INFORM EVA CREWMAN OF LM AND EVCS/PLSS OPERATING STATUS. LOSS OF THIS LINK COULD COMPROMISE CREW SAFETY.

(E) RENDEZVOUS AND DOCKING - REGARDLESS OF WHICH SPACECRAFT PERFORMED THE ACTIVE RENDEZVOUS AND DOCKING, THE SAME PROBLEMS AND CONSTRAINTS WOULD BE PRESENT DUE TO THE LOSS OF VHF. SINCE THE LM IS NORMALLY THE ACTIVE VEHICLE, THERE WOULD BE NO REASON TO PERFORM ANYTHING OTHER THAN A LM ACTIVE RENDEZVOUS.

(2) ALTERNATE MISSION

IF VHF COMMUNICATIONS IS LOST PRIOR TO UNDOCKING AND BOTH VEHICLES HAVE GOOD S-BAND VOICE COMMUNICATIONS WITH THE MSFN, THEN AN UNDOCKING AND STATION KEEPING TYPE MISSION WILL BE CONSIDERED. DUE TO CONTINUOUS VEHICLE TO VEHICLE COORDINATION REQUIRED DURING RENDEZVOUS, CSM CIRCULARIZATION WILL NOT BE PERFORMED IF VHF IS LOST. DURING LUNAR STAY, A ONE-MAN EVA CAN BE PERFORMED IF EVCS TO EVCS VOICE COMMUNICATIONS THROUGH THE SPACECRAFT IS POSSIBLE.

2. TWO-WAY VOICE COMMUNICATIONS BETWEEN CSM OR LM AND MSFN DURING ALL DOCKED ACTIVITIES AND BETWEEN BOTH SPACECRAFT AND MSFN DURING UNDOCKED ACTIVITIES.

A. DEFINITION OF LOSS

IF WHILE IN LINE OF SIGHT OF THE MSFN EITHER THE LM OR THE CSM CANNOT ESTABLISH DIRECT TWO-WAY S-BAND VOICE COMMUNICATIONS WITH THE MSFN IN EITHER TO NORMAL OR A BACKUP MODE OF OPERATIONS, THEN TWO-WAY S-BAND VOICE COOMMUNICATIONS BETWEEN THAT VEHICLE AND THE MSFN IS CONSIDERED TO BE LOST.

R	ITEM
	20-1A CONT.

B. GENERAL OPERATIONAL IMPACT

LOSS OF ONE VEHICLE'S S-BAND FORCES THAT VEHICLE TO COMMUNICATE WITH THE MSFN VIA RELAY THROUGH THE REMAINING VEHICLE. IN ADDITION, VEHICLE TO VEHICLE COMMUNICATION IS CONSTRAINED TO LINE OF SIGHT MISSION PERIODS WHICH IS AS LITTLE AS 20 MINUTES PER LUNAR REVOLUTION DURING THE LUNAR STAY MISSION PHASE. SHOULD THE REMAINING VEHICLE LOSE ITS S-BAND CAPABILITY, THEN BOTH SPACECRAFT WOULD HAVE NO VOICE COMMUNICATIONS WITH THE MSFN UNTIL THEY GET WITHIN VHF RANGE DURING TEC.

C. SPECIFIC OPERATIONAL IMPACT (REFERENCE SPECIFIC MISSION RULE 20-14)

(1) NOMINAL MISSION

(A) UNDOCKING THROUGH PDI AND LUNAR STAY - THE SPACECRAFT WHICH HAS LOST S-BAND VOICE COMMUNICATIONS WILL BE COMMITTED TO ONLY 20 MINUTES OF MSFN CONTACT PER REV. DURING LUNAR STAY OPERATIONS. THIS LIMITED CONTACT COMPROMISES GROUND CONTROLLER CAPABILITY TO INFORM THE CREW OF POTENTIALLY HAZARDOUS MISSION OR SPACECRAFT SITUATIONS.

(B) LO GATE TO TOUCHDOWN - A COMMUNICATIONS FAILURE DURING THIS PERIOD IS NOT SERIOUS ENOUGH TO WARRANT THE HAZARDS INVOLVED IN AN ABORT OPERATION WITHOUT S-BAND VOICE COMMUNICATIONS.

(C) RENDEZVOUS AND DOCKING - A LM ACTIVE RENDEZVOUS AND DOCKING IS STILL PERFORMED SINCE SPACECRAFT TO SPACECRAFT COMMUNICATIONS IS STILL AVAILABLE VIA VHF. S-BAND RELAY WILL ALLOW THE MALFUNCTIONING SPACECRAFT TO TALK TO THE MSFN.

(2) ALTERNATE MISSIONS

IF ONLY LM S-BAND COMMUNICATIONS IS LOST AND VHF COMMUNICATIONS IS AVAILABLE BETWEEN SPACECRAFT, ALTERNATE MISSIONS WHICH DO NOT COMMIT THE LM AND CSM TO A RENDEZVOUS MAY BE PERFORMED. IF CSM S-BAND IS LOST, NO ALTERNATE MISSION WILL BE PERFORMED WHICH JEOPARDIZES AVAILABILITY OF LM S-BAND COMMUNICATIONS FOR TEC.

NOTE---LOSS OF ONE OR BOTH CSM TRANSPONDERS WHICH WOULD MEAN NO REDUNDANCY OR COMPLETE LOSS OF CSM/MSFN COMM WOULD REQUIRE UTILIZATION OF THE LM FOR COMM DURING TRANSLUNAR COAST.

20-1B LAUNCH

THERE ARE NO COMMUNICATIONS FAILURES FOR WHICH THE LAUNCH/INSERTION PHASE WILL BE TERMINATED.

A. DEFINITION OF LOSS

SPACECRAFT TO MSFN COMMUNICATIONS IS CONSIDERED LOST IF COMMUNICATIONS CANNOT BE ESTABLISHED IN ANY OF THE FOUR VHF CONFIGURATIONS OR THE USB MODE.

B. GENERAL OPERATIONAL IMPACT

CONTINUING A LAUNCH/INSERTION WITHOUT SPACECRAFT TO MSFN COMMUNICATIONS IS NOT AS HAZARDOUS AS SUBJECTING THE CREW TO A LAUNCH ABORT. ADEQUATE ONBOARD MONITORING DEVICES EXIST TO KEEP THE CREW COGNIZANT OF THE LAUNCH VEHICLE AND SPACECRAFT STATUS.

20-1C POWERED DESCENT ADDITIONAL REQUIREMENTS

LM VOICE REQUIRED TILL LO GATE. THERE ARE NO CSM COMMUNICATIONS SYSTEMS FAILURES FOR WHICH LM POWERED DESCENT WILL BE TERMINATED.

A. DEFINITION OF LOSS

SAME AS ITEM 20-1-A.

B. GENERAL OPERATIONAL IMPACT (REFERENCE SPECIFIC MISSION RULE 20-14)

FROM PDI IGNITION TO TOUCHDOWN, THE FLIGHT CONTROLLERS HAVE THE PRIME RESPONSIBILITY FOR IDENTIFYING SLOW DIVERGENCES IN THE GUIDANCE SYSTEMS (PNGS AND AGS). MEASUREMENT ACCURACIES ARE SUCH THAT THE MSFN CAN DETERMINE PRIOR TO LO GATE THAT THERE ARE NO SLOW TRENDS IN EITHER GUIDANCE SYSTEM THAT WOULD PRECLUDE USING EITHER SYSTEM TO LO GATE. OBVIOUSLY, TO ADVISE THE CREW OF THE ABOVE DETERMINATION, VOICE COMMUNICATIONS WITH THE LM MUST BE MAINTAINED TO LO GATE.

R	ITEM	
	20-1D	LUNAR STAY ADDITIONAL REQUIREMENTS 1. FOR TWO-MAN EVA--VOICE COMMUNICATIONS BETWEEN MSFN AND ONE EVA. 2. FOR ONE-MAN EVA--VOICE COMMUNICATIONS BETWEEN MSFN AND LM OR EVA PLUS DUPLEX VOICE BETWEEN THE LM AND EVA CREWMAN. 3. DUPLEX VOICE COMMUNICATIONS BETWEEN BOTH EVA CREWMEN. A. GENERAL OPERATIONAL IMPACT TWO-WAY COMMUNICATIONS BETWEEN THE MSFN AND AN EVA CREWMAN (EITHER DIRECT OR VIA RELAY FROM THE OTHER CREWMAN) AND TWO-WAY COMMUNICATIONS BETWEEN EVA CREWMEN IS CONSIDERED A FLIGHT SAFETY ITEM DUE TO THE HOSTILE ENVIRONMENT AND THE LACK OF READILY AVAILABLE BACKUP HARDWARE. B. SPECIFIC OPERATIONAL IMPACT (REFERENCE SPECIFIC MISSION RULE 20-16 THRU 20-21) FOR LOSS OF VOICE COMMUNICATIONS BETWEEN CREWMEN (EITHER EVA-1 TO EVA-2 OR EVA-2 TO EVA-1), THE MISSION MAY BE CONTINUED SINCE THE CAPABILITY STILL EXISTS TO COMMUNICATE BETWEEN CREWMEN VIA THE LM. THE LOSS OF THE RELAY CAPABILITY IN THE LM WILL RESTRICT THE FLIGHT PLAN TO A ONE-MAN EVA SINCE A DUAL EVA WOULD RESULT IN THE LOSS OF ALL MSFN TO CREWMAN COMMUNICATIONS.
	20-2 A&B	THIS ITEM DOCUMENTS THE PRIME AND ALTERNATE COMMUNICATION MODES FOR BOTH A DUAL AND SINGLE EVA. THE PRIME MODES ARE DESIGNED TO ALLOW DUPLEX VOICE BETWEEN EVA'S, VOICE COMMUNICATIONS BETWEEN THE EVA CREWMEN AND THE MSFN, AND THE TRANSFER OF EVA DATA FROM BOTH CREWMEN TO THE MSFN. THE BACKUP MODES ARE DESIGNED TO ALLOW DUPLEX VOICE BETWEEN THE EVA'S, VOICE COMMUNICATIONS BETWEEN THE EVA CREWMAN AND THE MSFN, AND DATA FROM ONE EVA CREWMAN.

R	ITEM	
	20-7/10	ITEMS 20-7 THROUGH 20-10 DOCUMENT THE MANNER IN WHUCH THE COMMUNICATIONS SYSTEMS WILL BE MANAGED FOR THIS MISSION AND THEREFORE ARE PROCEDURAL IN NATURE AND REQUIRE NO RATIONALE.

R	ITEM	
	20-13	LOSS OF TWO-WAY VOICE COMMUNICATIONS BETWEEN SPACECRAFT THE TWO MISSION PHASES THAT ARE GREATLY COMPLICATED BY THE LOSS OF COMMUNICATIONS BETWEEN VEHICLES ARE RENDEZVOUS AND DOCKING. HOWEVER, IF THE MALFUNCTION OCCURS AFTER THE VEHICLES ARE SEPARATED ENOUGH TO HAVE COMMITTED TO A RENDEZVOUS, LACK OF COMMUNICATIONS IS NOT SUFFICIENT REASON TO TERMINATE THE ENTIRE FLIGHT PLAN INCLUDING LANDING AND EVA.
	20-14	LOSS OF TWO-WAY VOICE COMMUNICATIONS WITH THE MSFN LOSS OF TWO-WAY VOICE COMMUNICATIONS BETWEEN THE CSM AND THE MSFN PRIOR TO TLI WILL BE SUFFICIENT CAUSE FOR REENTERING SINCE THE CONTINUATION OF THE MISSION WOULD REQUIRE A SUCCESSFUL TLI AND TD AND E TO REESTABLISH COMMUNICATIONS VIA THE LM. EVEN THEN THE LOI MANEUVER WOULD NOT BE PERFORMED. LOSS OF CSM/MSFN COMMUNICATIONS POST-TLI WILL NOT BE CAUSE FOR AN ABORT BUT IT WILL NO GO LOI. COMMUNICATIONS WOULD BE ESTABLISHED BY POWERING UP THE LM TO ACCOMPLISH A CIRCUMLUNAR FLIGHT BUT THE ADDED RISK OF LOI WOULD NOT BE JUSTIFIED SINCE UNDOCKING COULD NOT BE PERFORMED ONCE IN LUNAR ORBIT DUE TO CSM/MSFN COMMUNICATIONS FAILURE. RATIONALE FOR THE LOSS OF LM/MSFN COMMUNICATIONS IS THE SAME AS STATED PREVIOUSLY IN THE RATIONALE FOR MISSION RULE 20-1-C. NOTE---FOR 20-14A, LOSS OF ONE OR BOTH CSM TRANSPONDERS WHICH WOULD MEAN NO REDUNDANCY OR COMPLETE LOSS OF CSM/MSFN COMM WOULD REQUIRE UTILIZATION OF THE LM FOR COMM DURING TRANSLUNAR COAST.
	20-15	LOSS OF TWO CSM AUDIO CENTERS EARTH ORBIT WILL BE CONTINUED SINCE THE REMAINING CSM AUDIO CENTER CAN PROVIDE THE REQUIRED COMMUNICATIONS. TLI WILL NOT BE PERFORMED SINCE THE LOSS OF THE REMAINING AUDIO CENTER WOULD RESULT IN A TOTAL LOSS OF CSM COMMUNICATIONS. ALTHOUGH THE LM COULD BE USED FOR VOICE, IT HAS NOT BEEN EXTRACTED OR CHECKED OUT PRIOR TO TLI. AFTER TLI HAS BEEN PERFORMED, THE MISSION WILL BE CONTINUED BUT IS NO GO FOR LOI WITH THE LOSS OF TWO AUDIO CENTERS. UNDOCKING WILL NOT BE PERFORMED BECAUSE OF POSSIBLE LOSS OF CSM/MSFN COMMUNICATIONS. HOWEVER, ONCE POWERED DESCENT IS INITIATED IT WILL BE CONTINUED. IN ALL CASES, IN EVENT OF LOSS OF TWO CSM AUDIO CENTERS, THE LM WILL BE RETAINED FOR POSSIBLE BACKUP COMMUNICATIONS.
	20-16 20-17	EVA-EVA COMM A. DEFINITION OF LOSS VOICE FROM EVA TO EVA IS CONSIDERED LOST IF ONE EVA CANNOT RECEIVE THE OTHER. B. GENERAL OPERATIONAL IMPACT THE LOSS OF VOICE FROM EVA-TO-EVA REQUIRES A CHANGE IN COMMUNICATION MODES. BECAUSE THE EVCS OPERATES ON DUPLEX ONLY, DUPLEX VOICE MUST BE RE-ESTABLISHED FOR SAFE LUNAR SURFACE OPERATION. C. SPECIFIC OPERATIONAL IMPACT (1) LOSS OF VOICE FROM EVA-2 TO EVA-1 (REF MISSION RULE 20-16). IN THE DUAL EVA PRIME MODE, EVA-2 TALKS TO EVA-1 ON THE 279.0 MHZ (FM) LINK. THEREFORE, A LOSS OF VOICE FROM EVA-2 TO EVA-1 REQUIRES A CHANGE TO A BACKUP MODE. EVA-1 REMAINS IN THE AR COMM SWITCH POSITION AND EVA-2 SWITCHES TO B POSITION TO RE-ESTABLISH DUPLEX COMMUNICATION. (2) LOSS OF VOICE FROM EVA-1 TO EVA-2 (REF MISSION RULE 20-17) IN THE DUAL EVA PRIME MODE, EVA-1 TALKS TO EVA-2 ON THE 259.7 MHZ (AM) LINK. THEREFORE, A LOSS OF VOICE FROM EVA-1 TO EVA-2 REQUIRES A CHANGE TO A BACKUP MODE. EVA-1 SWITCHES TO B AND EVA-2 SWITCHES TO A TO RE-ESTABLISH DUPLEX COMMUNICATION.

R	ITEM

20-18
20-21

EVA DUPLEX COMM

A. DEFINITION OF LOSS

OUPLEX VOICE IS CONSIDERED LOST IF BOTH CREWMEN CANNOT DIRECTLY COMMUNICATE WITH EACH OTHER IN PRIME OR BACKUP MOOES.

B. GENERAL OPERATIONAL IMPACT

THE LOSS OF DUPLEX VOICE INDICATES LOSS OF DIRECT COMMUNICATION BETWEEN THE TWO CREWMEN. SUBSEQUENT FAILURES IN THE LM COULO RESULT IN THE COMPLETE ISOLATION OF EACH CREWMAN. THE EVCS OPERATES ON OUPLEX ONLY BETWEEN THE TWO CREWMAN. THEREFORE, OUPLEX VOICE IS MANDATORY FOR SAFE LUNAR SURFACE OPERATION.

C. SPECIFIC OPERATIONAL IMPACT

(1) NOMINAL EVA - TWO MEN (REF MISSION RULE 20-18)

FOR OUAL OPERATION ON THE LUNAR SURFACE, THE CREWMEN REQUIRE EVA-TO-EVA VOICE TO CONDUCT SAFE LUNAR OPERATIONS. THIS CAN BE ACCOMPLISHED EITHER IN THE PRIME MODE, OR BACKUP MODES. IF THE EVA TO EVA OUPLEX VOICE COMMUNICATION CANNOT BE ESTABLISHED, THE EVA MUST BE TERMINATEO.

(2) ALTERNATE EVA - ONE MAN (REF MISSION RULE 20-21)

FOR A ONE-MAN EVA, THE EVA AND LM CREWMEN REQUIRE DUPLEX VOICE BETWEEN EACH OTHER FOR SAFE LUNAR SURFACE OPERATIONS. THIS CAN BE ACCOMPLISHED EITHER IN THE PRIME OR BACKUP MODE. IF DUPLEX VOICE COMMUNICATION CANNOT BE ESTABLISHEO, THE EVA MUST BE TERMINATED.

20-19
20-20

EVA-MSFN COMM

A. DEFINITION OF LOSS

TWO-WAY VOICE BETWEEN MSFN AND CREWMEN IS CONSIDERED LOST IF TWO-WAY VOICE CANNOT BE ESTABLISHEO BETWEEN MSFN AND EITHER OR BOTH OF THE CREWMEN.

B. GENERAL OPERATIONAL IMPACT

THE LOSS OF TWO-WAY VOICE BETWEEN MSFN AND BOTH CREWMEN IS UNACCEPTABLE FOR SAFE LUNAR SURFACE OPERATIONS. SUBSEQUENT FAILURES IN EITHER EMU UNITS OR THE LM NOTICED BY MSFN CANNOT BE RELAYED TO THE CREWMEN.

C. SPECIFIC OPERATIONAL IMPACT

(1) NOMINAL EVA - TWO MEN (REF MISSION RULE 20-19)

FOR DUAL OPERATION ON THE LUNAR SURFACE, TWO-WAY VOICE BETWEEN MSFN AND ONE EVA IS MANDATORY FOR SAFE LUNAR SURFACE OPERATION. IF THE PRIME EVCS MODE IS LOST, A BACKUP MODE IS NECESSARY TO CONTINUE THE EVA. SIMPLEX VOICE THROUGH THE LM IS ACCEPTABLE WHERE ONE CREWMAN CAN RECEIVE MSFN ONLY, AND THE OTHER CREWMAN CAN TRANSMIT TO MSFN ONLY BUT THE TWO CREWMEN MUST HAVE DUPLEX VOICE BETWEEN EACH OTHER. IF TWO-WAY VOICE WITH MSFN CANNOT BE RE-ESTABLISHED, THE EVA MUST BE TERMINATED.

(2) ALTERNATE EVA - ONE MAN (REF MISSION RULE 20-20)

FOR A ONE-MAN EVA, TWO-WAY VOICE BETWEEN MSFN AND AT LEAST ONE CREWMAN IS MANDATORY FOR SAFE LUNAR SURFACE OPERATIONS. IF THE PRIMARY EVCS MODE IS LOST, A BACKUP MODE IS NECESSARY TO CONTINUE EVA. IF TWO-WAY VOICE WITH MSFN CANNOT BE RE-ESTABLISHED, THE EVA MUST BE TERMINATED.

3 TRAJECTORY
AND
GUIDANCE

R	ITEM
	5-1 A,B&C

TERMINATION OF THE LAUNCH PHASE

COMMENTS

THE ACCEPTABLE TRAJECTORY ENVELOPE IS DEFINED BY A VEHICLE BREAKUP LINE, AN ABORT ENTRY ''G'' LIMIT, AND A PREENTRY SEQUENCING TIME REQUIREMENT.

1. LAUNCH VEHICLE BREAKUP IS CAUSED BY CONTROL OR GUIDANCE SYSTEM FAILURES WHICH RESULT IN EXCESSIVE ANGLE OF ATTACK AND AERODYNAMIC LOADING ON THE LAUNCH VEHICLE AND SPACECRAFT. THE FIRST STRUCTURAL FAILURE OCCURS AT THE CM/SM TENSION TIES AND IS FOLLOWED SHORTLY BY LAUNCH VEHICLE BREAKUP. THE LIMIT LINE IS BIASED BY 8 SECONDS FOR DATA SYSTEM DELAYS AND REACTION TIME.

2. THE ENTRY ''G'' LOAD RESULTING FROM A LAUNCH ABORT IS LIMITED TO 16 ''G''.

3. THE NORMAL MINIMUM PREENTRY SEQUENCING TIME (TFF) REQUIREMENT IS DEFINED BY THE TIME REQUIRED FOR---

   (A) DATA SYSTEM DELAY

   (B) COMMUNICATIONS DELAY

   (C) J-2 TAILOFF

   (D) CSM/S-IVB SEPARATION

   (E) 2-SECOND SPS BURN (IF REQUIRED FOR RATE DAMPING)

   (F) SM JETTISON

   (G) MANEUVER CM TO ENTRY ATTITUDE.

   THE SUM OF THE REQUIRED TIMES PLUS AN OPERATIONAL PAD RESULTS IN 100 SECONDS AS THE LIMIT. THE NOMINAL TRAJECTORY MAINTAINS MORE THAN 180 SECONDS AFTER TOWER JETTISON.

PARTICIPATION

FLIGHT DYNAMICS OFFICER

FLIGHT DIRECTOR

CAPCOM

FLIGHT CREW

DATA SOURCES

A. VEHICLE BREAKUP GAMMA VS. V ON THE LEFT PROJECTION PLOTTER, MSK 0040, SSR PLOTBOARD 1.

B. ENTRY ''G'' LIMIT - GAMMA EI VS. VEI ON MSK 0041 AND ON SSR PLOTBOARD 3.

C. PREENTRY SEQUENCE TIME - FDO LAUNCH DIGITALS, MSK 0043, TFF VS. RIP ON MSK 0333 AND SSR PLOTBOARD 2.

PROCEDURE

A. INDICATION

   TRAJECTORY TRACE DEVELOPS TREND TOWARD ANY ONE OF THE LIMITS.

B. ACTION

   1. GO TO YELLOW STATUS.

   2. IF TIME PERMITS, BRIEF FD ON CONDITION.

   3. GO RED IF CONDITION WORSENS.

   4. GIVE FD MARK, TRANSMIT ABORT REQUEST AT VIOLATION OF LIMIT.

   5. CAPCOM WILL RELAY MARK TO PROVIDE SECOND ABORT CUE.

R	ITEM
	5-1D

TERMINATION OF THE LAUNCH PHASE

COMMENTS

THERE ARE CERTAIN LAUNCH VEHICLE FAILURES WHICH COULD CAUSE COI CAPABILITY TO BE LOST AFTER IT HAS BEEN ACHIEVED AND CONSEQUENTLY WILL NOT RESULT IN A ''GO'' ORBIT. THESE FAILURES ARE CAUSED BY GUIDANCE PROBLEMS AND RESULT IN LARGE FLIGHTPATH ANGLE EXCURSIONS WITHOUT VIOLATING A RATE LIMIT.

VS IS AN IMPULSIVE COMPUTATION OF THE DELTA V REQUIRED TO ACHIEVE A SAFE ORBIT. BY TERMINATING POWERED FLIGHT WHEN VS STARTS INCREASING, WE PREVENT THE SIZE OF THE MODE IV MANEUVERS FROM BECOMING EXCESSIVE AND IN MOST CASES STOP A DEVIATING VEHICLE FROM LOSING A COI CAPABILITY ALREADY GAINED. DEPRESSED TRAJECTORIES RESULTING FROM THESE TYPE FAILURES OFTEN RESULT IN LAND IP'S WITH MARGINAL OR INSUFFICIENT FREE FALL TIME TO PERFORM A MODE III MANEUVER.

PARTICIPATION

FLIGHT DYNAMICS OFFICER

FLIGHT DIRECTOR

CAPCOM

FLIGHT CREW

DATA SOURCES

GAMMA VS. VS DISPLAY

FDO LAUNCH DIGITALS

PROCEDURE

A. INDICATION - EITHER VS ON GAMMA VS VS BEGINS TO INCREASE OR V/VS ON DIGITALS BEGINS TO DECREASE.

B. ACTION

1. GO TO YELLOW STATUS
2. BRIEF FD IF TIME PERMITS
3. GO TO RED IF DIVERGANCE CONTINUES
4. GIVE FD MARK AND TRANSMIT ABORT REQUEST
5. CAPCOM WILL RELAY MARK AS SECOND CUE

R	ITEM
	5-1E

TERMINATION OF THE LAUNCH PHASE

COMMENTS

ONCE THE LV HAS INSERTED THE SPACECRAFT INTO ORBIT, ANY CONTINUED THRUSTING BEYOND THE INSERTION POINT WILL PLACE THE S/C INTO INCREASINGLY ''OFF NOMINAL'' ORBITS FROM WHICH A TLI CANNOT BE PERFORMED.

THE TIMES REQUIRED TO ''A'' RECOGNIZE AND VERIFY AN OVERSPEED CONDITION ''B'' TRANSMIT A REQUEST TO THE CREW TO TERMINATE S-IVB THRUSTING, AND ''C'' THE TIME REQUIRED FOR THE CREW TO ACTUALLY TERMINATE THRUSTING ARE AS FOLLOWS---

(A) = 8 SECS (RECOGNIZE AND VERIFY).

(B) = 8 SECS (REQUEST CUTOFF).

(C) = 8 SECS (CREW SHUTDOWN).

ALLOWING THE LV TO THRUST FOR THE PERIOD OF TIME REQUIRED TO RECOGNIZE THE OVERSPEED CONDITION WILL PLACE THE LV AND S/C INTO AN ORBIT INSTANTANEOUSLY CHARACTERIZED BY AN HA OF 200 N. M. THIS THEN BECOMES THE OVERSPEED LINE OF THE PLOTBOARD FOR WHICH THE LV WILL BE MANUALLY SHUT DOWN. AS THE BOOSTER WILL THRUST FOR AN ADDITIONAL 16 SECS BEFORE SHUTDOWN CAN BE EFFECTED, THE S/C AND SLV WILL END UP IN AN ORBIT CHARACTERIZED BY AN HA = 350.

PARTICIPATION

GDO

FDO

FD

CAPCOM

FLIGHT CREW

DATA SOURCES

A. GAMMA VS. V PLOTBOARD.

B. GUIDANCE OFFICER

PROCEDURE

A. INDICATION - TRAJECTORY TRACE MOVES BEYOND NOMINAL INSERTION CONDITIONS TO 200 N.M. LINE AFTER THE NOMINAL TIME OF GUIDANCE CUTOFF.

B. ACTION - FDO WILL IMMEDIATELY INFORM THE FD THAT ''WE ARE OVERSPEED'' AND ''REQUEST SHUTDOWN''. THE CREW WILL THEN ATTEMPT SHUTDOWN VIA THE S-IVB/S-II STAGING SWITCH OR THE THC IF THE SWITCH SHOULD FAIL TO EFFECT C/O. SHOULD THE THC NOT YIELD C/O CONDITIONS, THE FDO WILL VIA A VERBAL CODE, REQUEST THE RSO TO TRANSMIT MFCO.

R	ITEM
	5-1F

TERMINATION OF THE LAUNCH PHASE

COMMENTS

DURING FIRST STAGE FLIGHT, SHOULD AN OTHERWISE NORMAL OPERATING BOOSTER DEVIATE BEYOND THE EXIT HEATING LINE, CATASTROPHIC SPACECRAFT FAILURES DUE TO ATMOSPHERIC FRICTION WILL RESULT. THIS ATMOSPHERIC HEATING WEAKENS THE STRUCTURAL INTEGRITY OF THE SM, SLA, AND DETERIORATES THE RELIABILITY OF THE PYROTECHNICS SURROUNDING THE SM AND THE SLA.

PARTICIPATION

GDO, FDO, FD, CAPCOM, FLIGHT CREW

DATA SOURCE

GAMMA VS. V PLOTBOARD

PROCEDURE

A. INDICATION.

TRAJECTORY TRACE DEVIATES TOWARD THE EXIT HEATING LINE.

B. ACTION.

1. GO TO YELLOW STATUS.
2. IF TIME PERMITS, BRIEF THE FD.
3. GO TO RED STATUS IF CONDITION WORSENS.
4. GIVE FD ''MARK'', TRANSMIT ABORT REQUEST UPON VIOLATION OF EXIT HEATING LIMIT.
5. CAPCOM WILL RELAY ''MARK'' AS THE REQUIRED SECOND ABORT QUE.

R	ITEM
	5-1G

TERMINATION OF LAUNCH PHASE FOR DECREASING ALTITUDE.

COMMENTS---

SHOULD THE SLV EXPERIENCE A PREMATURE CUTOFF DURING THE LAUNCH PHASE VARIOUS ABORT MODES ARE AVAILABLE TO EFFECT A SAFE RETURN OF THE S/C. THIS SAFE TRAJECTORY ENVELOPE IS FURTHER MAINTAINED BY TAKING EFFECTIVE ABORT ACTION BEFORE THE SLV ENTERS AN UNSAFE REGION. ONE CONCERN IS THE AMOUNT OF TIME REQUIRED, ONCE ABORT ACTION HAS BEEN TAKEN, TO ''SHAPE'' THE ABORT TRAJECTORY AND PREPARE THE S/C FOR ENTRY. SHOULD A THRUSTING MANEUVER BE REQUIRED TO EFFECT THIS ''SHAPING'', SUFFICIENT TIME MUST BE PROVIDED AT THE COMPLETION OF THIS MANEUVER FOR ENTRY PREPARATIONS. THIS TIME IS CALLED TFF (TIME OF FREE-FALL).AS LONG AS THE LAUNCH TRAJECTORY ALTITUDE PROFILE REMAINS ABOVE APPROX. 80 N.M. THIS TFF CAN BE MAINTAINED. SHOULD, HOWEVER, A DECREASING TREND IN ALTITUDE BE OBSERVED TFF MINIMUMS CANNOT BE GUARANTEED. THIS IS ESPECIALLY TRUE IF THE CURRENT FREE FALL IMPACT POINT IS ON A LAND MASS. IN THIS CASE THE TIME REQUIRED TO SHAPE THE TRAJECTORY (THRUSTING MANEUVER TIME) INCREASES NON-LINEARTY TO A POINT WHERE A LAND IMPACT CANNOT BE AVOIDED.

PARTICIPATION---

FDO, FD, RFO, CAPCOM

DATA SOURCES---

LAUNCH DIGITALS, H VS D

PROCEDURE---

WHEN THE ALTITUDE HAS RISEN ABOVE 80 N.M. AND THEN DECREASE BACK TO 80 N.M. THE FDO WILL INSTRUCT TO FD OF SAME AND COMMAND ABORT.

R	ITEM
	5-2

HOLD LES UNTIL MODE II CAPABILITY IS ESTABLISHED

COMMENTS

MODE II ABORTS REQUIRE A MINIMUM TIME, BETWEEN ABORT AND DYNAMIC PRESSURE = 16 PSF, OF 100 SECONDS FOR ORIENTATION TO ENTRY ATTITUDE. A TFF OF 80 SECONDS TO 300K FEET PROVIDES THE REQUIRED TIME. THEREFORE, THE PREVIOUS ABORT CAPABILITY, LES, SHOULD NOT BE ABANDONED PRIOR TO ACHIEVING THAT CAPABILITY. DEPRESSED TRAJECTORIES CAN RESULT IN NOT MEETING THIS REQUIREMENT BY THE NOMINAL LES JETTISON TIME.

PARTICIPATION

FLIGHT DYNAMICS OFFICER

FLIGHT DIRECTOR

CAPCOM

FLIGHT CREW

DATA SOURCE

PRIMARY, FDO LAUNCH DIGITALS, MSK 41

SECONDARY, TFF VS. RIP DISPLAY, MSK 333

PROCEDURE

A. INDICATION

TFF AS INDICATED ON ABOVE DATA SOURCES IS LESS THAN 80 SECONDS AFTER STAGING.

B. ACTION

FDO ANNOUNCE OVER FLIGHT DIRECTOR LOOP, ''TRAJECTORY IS LOW HOLD TOWER JETT'', CAPCOM RELAY SAME REPORT TO CREW OVER AIR TO GROUND LOOP, CREW DELAY TOWER JETTISON. WHEN TFF EXCEEDS 80 SECONDS, FDO ANNOUNCE OVER FLIGHT DIRECTOR LOOP ''GO FOR TOWER JETT'', CAPCOM RELAY TO CREW, CREW JETTISON LES.

R	ITEM

MODE II, III, IV, APOGEE KICK

5-3A MODE II, III, IV, APOGEE KICK

COMMENTS

A. THE GROUND HAS THE CAPABILITY OF SELECTING THE BEST OF FIVE DATA SOURCES (APL, SAT, USB, IP RAW, SHIP C-BAND) AND AS SUCH IS IN THE BEST POSITION TO EVALUATE THE PERFORMANCE OF THE CMC AND ANY REQUIRED ABORT OR COI MODE. FOR MODE IV MANEUVERS, PROCEDURES HAVE BEEN DEVELOPED SO THE CREW, UPON RECEIVING A MODE IV RECOMMENDATION AND A GO EVALUATION OF THE CMC, CAN PERFORM A MODE IV MANEUVER WITHOUT ASSITSTANCE FROM THE GROUND. IN THE EVENT THE CMC IS DECLARED NO-GO FOR MODE IV MANEUVERS, THE GROUND WILL ASSUME RESPONSIBILITY FOR SUPPORTING DATA REQUIRED.

B. MODE IV'S EXECUTED WITH THE CMC WILL BE PLANNED FOR 1.5 MINUTES AFTER S-IVB C/O. A GROUND COMPUTED BACKUP SOLUTION WILL BE AVAILABLE FOR EXECUTION AT 2+05 FROM S-IVB C/O.

C. THE GROUND WILL BE PRIME FOR COMPUTATION OF MODE III ABORT MANEUVERS BECAUSE THE CMC IS NOT ADEQUATELY CONFIGURED TO COMPUTE OR MONITOR MODE III MANEUVERS WITHOUT GROUND ASSISTANCE.

D. APOGEE KICK MANEUVERS WILL BE USED WHEN THEY PROVIDE A CONSIDERABLE DELTA V SAVINGS OVER MODE IV SOLUTIONS. THIS LIMITS USE TO HIGH FLIGHT PATH ANGLE DISPERSED CUTOFFS. THE CMC WILL BE PRIME FOR COMPUTATION, THE GROUND WILL PROVIDE APOGEE TIME TO AID CREW. IF THE CMC IS NO-GO, THE GROUND WILL PROVIDE A COI PAD.

E. AS LONG G&N IS ''GO'', THE CREW WILL HAVE A MORE IMMEDIATE CAPABILITY TO DETERMINE S-IVB OVERSPEED CONDITIONS. IN ORDER TO CONSERVE TLI CAPABILITY, THE CREW WILL EFFECT AN S-IVB CUTOFF WHEN, BY MONITORING V1 H AND H DOT OR HA AND HP, THE CREW HAS DETERMINED A SAFE INSERTION ORBIT HAS BEEN OBTAINED. IN THE EVENT THE G&N IS NO-GO, THE GROUND WILL ASSUME THE RESPONSIBILITY OF DETERMINING OVERSPEED CONDITIONS AND WILL REQUEST THE CREW TERMINATE S-IVB THRUST.

PARTICIPATION

FLIGHT DYNAMICS TEAM

CAPCOM

FLIGHT CREW

FLIGHT DIRECTOR

DATA SOURCES

FDO LAUNCH DIGITALS

RFO LAUNCH DIGITALS

PERIGEE ADJUST TABLE

PROCEDURE

A. INDICATION

TRAJECTORY IS NO-GO AT S-IVB CUTOFF DUE TO TRAJECTORY PROBLEMS.

B. ACTION

1. FDO MARKS MODE IV CAPABILITY DURING POWERED FLIGHT.

2. AT S-IVB CUTOFF FDO MAKES GO/NO-GO.

3. IF ORBIT IS NO-GO AND MODE IV CAPABILITY HAS BEEN ACHIEVED, CAPCOM RELAYS MODE IV RECOMMENDATION.

4. IF ORBIT IS NO-GO AND MODE IV CAPABILITY HAS NOT BEEN ACHIEVED, RETRO MAKES ABORT MODE DECISION AND FDO SENDS ABORT REQUEST LIGHT ON.

5. EITHER THE FDO (MODE IV) OR RETRO (MODES II AND III) PASS APPROPRIATE PADS TO CAPCOM FOR RELAY TO THE CREW.

R	ITEM
	5-3B

INTERRUPTION OF ABORT AND COI MANEUVERS

COMMENTS

ONE MINUTE AND 40 SECONDS PRIOR TO 300K FEET IS FELT TO BE THE MINIMUM TIME TO GET SEPARATED AND TO GET BLUNT END FORWARD BEFORE BEING AERODYNAMICALLY CAPTURED (REFERENCE RULE 5-1). FOR THIS REASON, ALL THRUSTING MANEUVERS SHOULD BE TERMINATED AT TFF = 1+40. NOMINALLY THE ONLY MANEUVERS THAT APPROACH THIS LIMIT ARE HIGH DELTA V MODE III MANEUVERS AND EARLY MODE IV'S.

PARTICIPATION

FLIGHT DYNAMICS OFFICER

FLIGHT DIRECTOR

CAPCOM

FLIGHT CREW

RETROFIRE OFFICER

DATA SOURCES

FDO LAUNCH DIGITALS

CMC TFF READOUT (REGISTER 3 V06N44)

TFF VS RIP PLOTBOARD

H VS D PLOTBOARD

PROCEDURE

A. INDICATION

1. TFF AS INDICATED ON ABOVE SOURCES IS LESS THAN 1+40 AND DECREASING DURING A POWERED FLIGHT MANEUVER.

B. ACTION

1. IF TFF IS MARGINAL OR A KNOWN TFF INTERRUPT WILL OCCUR, FDO OR RFO WILL GO AMBER AND BRIEF FLIGHT PRIOR TO THE BURN. THE CAPCOM WILL RELAY THE CAUTION TO THE FLIGHT CREW.

2. WHEN THE TFF IS VIOLATED, FDO WILL ANNOUNCE ABORT AND SEND A AND B ABORT LIGHT ON. CAPCOM WILL RELAY ABORT TO THE FLIGHT CREW.

3. RFO WILL DETERMINE THE ENTRY PROFILE AND PITCH ANGLE AT 300K FEET. THE RFO WILL ANNOUNCE ENTRY PROFILE AND PITCH ATTITUDE OVER FD LOOP AND CAPCOM WILL RELAY THE DATA.

4. THE ENTRY PROFILE WILL BE EITHER FULL LIFT OR RL90 DEPENDING ON LAND IP EVALUATION-- THE PITCH ANGLE AT ENTRY WILL BE BASED ON A HAND PLOT.

5. FLIGHT CREW WILL EXECUTE SPS OFF BASED ON ONBOARD AND GROUND CUES, SEPARATE ASAP IN THE PRESENT THRUSTING ATTITUDE, ORIENT THE CM BEF AND FLY THE RECOMMENDED BANK ANGLE. FOR NO-VOICE ORIENT THE CM USING THE HORIZON REFERENCE AND FLY RL90.

REFERENCES

A. AAWG

B. CREW OPINION

R	ITEM
	5-3C

INTERRUPTION OF MODE II, III, IV

COMMENTS

MODE III AND MODE IV MANEUVERS DERIVED BY THE LAUNCH PROGRAM OF THE RTCC ARE DISPLAYED ONLY IF THE INSTANTANEOUS ALTITUDE DURING THE MANEUVER WILL REMAIN ABOVE 75 N.M.

UNDER CERTAIN CIRCUMSTANCES, SUCH AS MANEUVERS PERFORMED AT WRONG ATTITUDE, LOW SPS THRUST, OR DELAYED IGNITION TIME, IT IS POSSIBLE FOR THE S/C TO DROP BELOW 75 N.M. DURING THE BURN. IN MOST OF THESE CASES, A LAND IP WILL EXIST AT THIS POINT, IF ANY IP EXISTS AT ALL. BECAUSE OF THE LOW ALTITUDE AND MARGINAL FREEFALL TIME, TERMINATION OF THE MANEUVER IN FAVOR OF A MODE III IS NOT FEASIBLE.

SIMULATION EXPERIENCE HAS SHOWN THAT UNDER THESE CIRCUMSTANCES, IT IS BETTER TO CONTINUE THE MODE IV MANEUVER AS LONG AS THE CURRENT HP IS AT LEAST 300K FT. FOR HP LESS THAN 300K FT. THE MANEUVER WILL BE TERMINATED AND AN ENTRY ATTEMPTED.

PARTICIPATION

FLIGHT DYNAMICS OFFICER

FLIGHT DIRECTOR

CAPCOM

FLIGHT CREW

DATA SOURCE

TFF VS. RIP

FDO LAUNCH DIGITALS

RFO LAUNCH DIGITALS

ACTION

1. GO TO YELLOW STATUS.
2. BRIEF FD IF TIME PERMITS.
3. AT LIMIT REQUEST FLIGHT TO TERMINATE BURN.
4. CAPCOM RELAY REQUEST.
5. RETRO FOLLOW WITH ENTRY DATA.

R	ITEM
	5-3D

UTILIZATION OF LIFT TO AVOID LAND FOR LAUNCH ABORTS

COMMENTS

THE CM IS DESIGNED FOR LAND LANDINGS BUT THEY MAY CAUSE VEHICLE STRUCTURAL BREAKUPS AND POSSIBLE INJURY TO THE FLIGHT CREW. FOR THIS REASON, EVERY ATTEMPT IS MADE TO INSURE A WATER LANDING. THE RULE APPLIES WHEN ENTRY TRAJECTORY CANNOT BE ALTERED WITH A BURN TO AVOID LAND.

PARTICIPATION

RETROFIRE OFFICE

FLIGHT DIRECTOR

CAPCOM

FLIGHT CREW

DATA SOURCES

RFO LAUNCH DIGITALS

PHI VS. LAMBDA PLOTBOARD

RFO ENTRY DIGITALS

PROCEDURE

A. INDICATION

NO BURN FULL LIFT IMPACT POINT LOCATION. ZERO LIFT IMPACT POINT LOCATION CAN BE USED IF AVAILABLE (ENTRY PHASE).

B. ACTION

1. THE RFO WILL DETERMINE IF THE FULL LIFT IMPACT IS ON LAND OR WATER.

(A) IF THE FULL LIFT IMPACT POINT IS ON LAND, THE RFO WILL RECOMMEND RL90. THIS ENTRY PROFILE AIDS IN IMPACT PREDICTION (NO L/D) AND, IN SOME CASES, ALLOWS A WATER LANDING OFF THE WEST COAST OF AFRICA. THE RFO WILL ALSO ADVISE IF THE RL90 IMPACT POINT IS ON LAND OR WATER.

(B) IF THE FULL LIFT IMPACT POINT IS ON WATER, THE RFO WILL RECOMMEND FULL LIFT. EXCEPTIONS TO THIS CASE ARE WHEN THE TOTAL FOOTPRINT IS IN WATER-- THE RFO WILL THEN DETERMINE THE ENTRY PROFILE WHICH IS BEST SUITED TO GET TO THE INTENDED TARGET POINT.

2. THE CAPCOM WILL RELAY THE ENTRY PROFILE TO THE CREW AND ADVISE THE CREW OF A LAND LANDING IF THAT SITUATION EXISTS.

REFERENCES

OPERATIONAL OPINION

R	ITEM
	5-3E

MODE II, III, IV, AND APOGEE KICK

COMMENTS

A. SPS BURN FAILURES INCLUDE NO SPS BURNS AND PARTIAL SPS BURN CASES. NO ATTEMPT IS MADE TO CONTINUE THE FAILED SPS MANEUVER WITH THE SM RCS. INSTEAD ALL ATTEMPTS AND EVALUATIONS MADE ARE TO INSURE A SAFE REENTRY (HP LESS THAN 40 NM) FOR THE S/C. ALSO NO ATTEMPT IS MADE TO PERFORM MANEUVERS TO AVOID LAND, EXCEPT FOR VARYING THE LIFT ORIENTATION. THE ONLY RCS MANEUVERS PERFORMED ARE DONE AS CLOSE TO APOGEE AS POSSIBLE TO GET MAXIMUM RCS DELTA V EFFICIENCY IN REDUCING HP LESS THAN 40 NM.

B. NO SLA SEP CASES ARE CONSIDERED AS NO SPS BURN CASES EXCEPT WHEN 40 LESS THAN HP LESS THAN 75. FOR THIS CASE, DUE TO THE MASSES INVOLVED AND THE LOW SM-RCS ACCELERATION, IT IS NOT PRACTICAL TO USE THE SM-RCS TO BRING HP DOWN (DELTA V OBTAINED IN THIS CONFIGURATION IS APPROXIMATELY 35 FPS OVER 14 MINUTES). THEREFORE THE PROCEDURE IS TO SEPARATE AND CONTROL HP WITH THE CM-RCS ASAP.

C. IN GENERAL---

1. THE MODE II FAILURE CASES HAVE HP'S LESS THAN 40 NM AND NO RCS MANEUVER IS REQUIRED.

2. THE MODE IV, AK, AND MODE III FAILURE CASES CAN HAVE HP'S GREATER THAN 40 IN SOME CASES, AND THEREFORE MAY REQUIRE AN RCS MANEUVERS. (SEE ATTACHED GAMMA VS. V PLOT.)

PROCEDURE

A. INDICATION.

1. FLIGHT CREW REPORTS NO THRUST OR NO SLA SEP.

2. NO THRUST CONFIRMED BY G&C-- NO SLA SEP CONFIRMED BY EECOM.

B. ACTION.

1. SPS FAILURES.

(A) RFO DETERMINE HP AND WHETHER APOGEE WILL BE BEYOND CYI AOS.

(1) HP LESS THAN 40 NM - RFO DO LAND IMPACT EVALUATION (REF. MR. 5-5D) AND RELAY TO CREW VIA CAPCOM ENTRY PROFILE, PITCH AT .05G, AND GET 300K.

(2) 40 LESS THAN HP LESS THAN 75 NM - CREW ORIENT FOR SM-RCS DEORBIT (HEADS DOWN, RETROGRADE). RFO RELAY TO CREW VIA CAPCOM AT CYI GETI DELTA V, DELTA TB, PITCH AT .05G, GET 300K, AND ENTRY PROFILE.

(3) SOME HP GREATER THAN 40 NM CASES REQUIRE A LARGE AMOUNT OF DELTA V IF DELAYED TO CYI (CASES ARE LOW GAMMA, H). FOR THESE CASES, RFO WILL ADVISE BURN ASAP WITH 100 FPS RETROGRADE, FLY RL90. CREW MAY TERMINATE BURN AT 100 FPS OR HP = 40 NM, WHICHEVER COMES FIRST.

(B) FOR NO-VOICE, CREW WILL USE GETI = 19+00, DELTA V = 100 FPS, FLY RL90. BURN MAY BE TERMINATED ON 100 FPS OR HP = 40 NM.

2. NO SLA SEP.

(A) RFO DETERMINES HP AND WHETHER APOGEE WILL BE BEYOND CYI AOS.

(1) HP LESS THAN 40 NM - RFO DO LAND IMPACT EVALUATION (REF. MR 5-5D) AND RELAY TO CREW VIA CAPCOM ENTRY PROFILE, PITCH AT .05G AND GET 300K. CREW WILL PERFORM CM SEPARATION MANEUVER.

(2) HP GREATER THAN 40 NM BUT LESS THAN 75 NM - RFO WILL ADVISE CM-RCS DEORBIT WITH DELTA V = 70 FPS. IF APOGEE IS PRIOR TO CYI, CREW WILL SEPARATE IMMEDIATELY AND GETI WILL BE ASAP. IF APOGEE IS AFTER CYI, CREW WILL SEPARATE 3 MINUTES PRIOR TO GETI. GETI = GET AND CAPCOM WILL GIVE CREW GETI, DELTA V AND RL90 ENTRY PROFILE. CREW CAN TERMINATE BURN ON DELTA V OR HP = 40 NM.

R	ITEM
	5-3E CONT

3. CM SEP MANEUVER.

(A) PITCH ENTIRE STACK CONFIGURATION DOWN 36 DEG.

(B) CM/(SM/S-IVB) SEP.

(C) PITCH THE CM DOWN ANOTHER 35 DEG TO 71 DEG.

(D) ROLL 180 DEG.

(E) BURN OUT DELTA V.

REFERENCE

FCD OPERATIONAL OPINION.

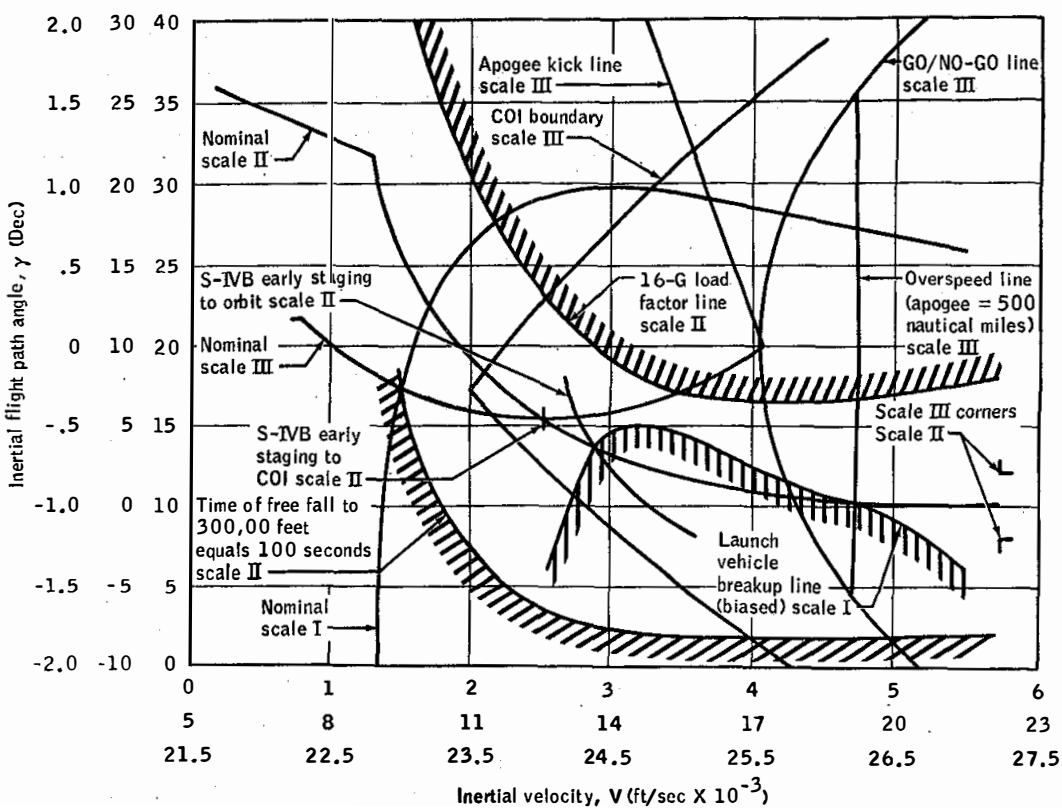

Figure 1. - Inertial flight path angle versus inertial velocity (γ-V).

R	ITEM
	5-4A

MODE III ABORTS - PREDICTED TFF LESS THAN 1HR 40MIN AFTER CUTOFF

COMMENTS

A. THE CREW HAS STATED THAT 1+40 IS A VALID TIME CONSTRAINT BETWEEN CUTOFF AND 300K FEET FOR ENTRY PREPARATIONS. FOR MODE III ABORTS OFF THE NOMINAL, TFF AT C/O VARIES FROM 1+26 TO 4+15. FOR ABORTS OFF THE LATER PORTION OF THE NOMINAL, AS WELL AS CASES FROM AN OFF-NOMINAL TRAJECTORY, CARE MUST BE TAKEN TO INSURE THE 1+40 CONSTRAINT. THIS WILL NOT ALWAYS RESULT IN A WATER LANDING.

B. A PARTIAL SPS MANEUVER WILL BE PERFORMED ONLY TO AVOID A LAND LANDING. AN RL90 ENTRY WILL BE FLOWN IN AN ATTEMPT TO MOVE THE IP AS FAR WEST AS POSSIBLE.

C. ACTION SHOULD BE TAKEN TO MAINTAIN THE 1+40 CONSTRAINT AS WELL AS INSURE A WATER LANDING IN AS MANY CASES AS POSSIBLE BY VARYING THE LIFT PROFILE AND/OR THE BURN TIME.

PROCEDURE

WHEN PREDICTED TFF LESS THAN 1+40 FOR THE MODE III MANEUVER.

A. IF THE FULL-LIFT IP IS ON WATER, THERE WILL BE NO BURN.

B. IF THE G AND N IS GO AND THE FULL-LIFT IP IS ON LAND, THE CREW WILL BURN AT GET1 AND TERMINATE THE BURN AT TFF = 1+40. THEY WILL FLY RL90 TO GET THE MODE III IP AS NEAR THE WEST COAST OF AFRICA AS POSSIBLE.

C. IF THE G AND N IS NO-GO AND THE FULL-LIFT IP IS ON LAND, THE AMOUNT OF TFF VIOLATION WILL BE SUBTRACTED FROM THE COMPUTED BURN TIME. THE RESULTING BURN TIME ALONG WITH THE CORRESPONDING DELTA V WILL BE PASSED TO THE CREW. THIS INSURES NO VIOLATION OF THE TFF CONSTRAINT BUT MAY RESULT IN A LAND LANDING. THE CREW WILL FLY RL90 TO GET THE MODE III IP AS NEAR THE WEST COAST OF AFRICA AS POSSIBLE.

REFERENCES

A. PRELIMINARY LAUNCH ABORT STUDY FOR APOLLO MISSION F/CSM-103/LM-3.

B. APOLLO MISSION TECHNIQUES SATURN V/APOLLO LAUNCH PHASE ABORTS.

R	ITEM	
	5-4B	MODE III BURNS LESS THAN 2 SECONDS

COMMENTS

MODE III BURNS OF LESS THAN 2 SECONDS ARE NOT WORTHWHILE BECAUSE A 2-SECOND BURN MOVES THE IP ONLY ABOUT 25 N. M. THE FLIGHT CAN BEST BE SPENT BY PREPARING FOR ENTRY.

MODE III BURNS OF GREATER THAN 2 SECONDS SHOULD BE PERFORMED TO AVOID LAND.

PROCEDURE

THE RFO WILL ANNOUNCE MODE III NO BURN, FLY RL55.

CAPCOM RELAY DATA TO CREW.

THE RFO WILL PROVIDE PITCH AT .05G FEET AND GET 300K.

REFERENCES

AAWG.

OPERATIONAL OPINION.

R	ITEM
	5-4C

NO IGNITION BY GETI +10 SECONDS FOR MODE III ABORTS

COMMENTS

A. THE DELTA V AND GETI COMPUTED FOR MODE III IS A MANEUVER TO HIT AN RL55 TARGET POINT. IF THE GETI IS DELAYED THE IP MOVES EAST APPROXIMATELY 5 NM/SEC. ALSO, TFF AFTER THE MANEUVER IS REDUCED APPROXIMATELY 1 SECOND FOR EACH SECOND OF DELAY.

B. THE WEST COAST OF AFRICA IS 150 NM FROM THE MODE III TARGET POINT. IN THE MODE III REGIME THE IP ASSOCIATED WITH RL90 BANK ANGLE IS APPROXIMATELY 200 NM UPRANGE OF THE IP FOR AN RL55 BANK ANGLE. AFTER 60 SECONDS OF DELAY TIME TFF BECOMES A FACTOR DURING THE MANEUVER. SINCE THE MODE III IP IS BASED ON AN RL55 BANK ANGLE, WHEN THE CREW CAN BURN DELTA R TO ZERO, AN RL55 IS ACCEPTABLE BECAUSE THEY WILL HIT THE TARGET. WHEN DELTA R CANNOT BE BURNED TO ZERO BECAUSE OF THE TFF CONSTRAINT, A BURN TO TFF = 1+40 AND RL90 ENTRY WILL KEEP THE CREW OFF LAND FOR DELAYS UP TO 70 SECONDS.

C. IF THE G AND N IS NOT AVAILABLE, THE ORIGINAL MODE III DELTA V PASSED CAN BE USED WITH AN RL90 ENTRY WHICH WILL AVOID LAND FOR DELAYS UP TO 70 SECONDS FOR MODE III ABORTS OFF THE NOMINAL TRAJECTORY OCCURRING BEFORE 11+00 GET.

PROCEDURE

A. RFO WILL MARK GETI + 10 SECONDS AND IF PREDICTED TFF IS NOT VIOLATED WILL ADVISE BURN DELTA R = 0 AND FLY RL55. IF THE PREDICTED TFF WILL BE VIOLATED RFO WILL ADVISE BURN TFF = 1+40 AND FLY RL90.

B. IF THE G AND N IS NO-GO AND T ABORT LESS THAN 11+00 RFO WILL ADVISE BURN ORIGINAL MODE III DELTA V PASSED AND FLY RL90.

C. IF THE G AND N IS NO-GO AND T ABORT GREATER THAN 11+00, RFO WILL ADVISE TO BURN A REDUCED DELTA V SO TFF LIMIT WILL NOT BE VIOLATED BUT AN ENTRY TRAJECTORY WILL BE ESTABLISHED. RFO WILL ADVISE TO FLY RL90.

R	ITEM
	5-5A

CRITERIA FOR CMC NO-GO FOR ABORT MANEUVER AND MONITORING (SOFTWARE FAILURES)

COMMENTS

THE RELIABILITY OF THE CMC AS A DATA SOURCE OR CONTROL DEVICE IS DEPENDENT ON THE INTERNAL FUNCTIONING OF THE SOFTWARE. THE CMC IS PROGRAMMED TO RECOGNIZE INTERNAL FAULTS AND ERRONEOUS CONDITIONS. UPON RECOGNITION OF SUCH A CONDITION, THE COMPUTER ISSUES A PROGRAM ALARM. THE ALARMS CONSIDERED TO INVALIDATE THE CMC FALL INTO TWO CATEGORIES. THOSE WHICH OCCUR SINGULARLY AND CONTINUOUSLY. THE ALARMS, BY CATEGORY, ARE AS FOLLOWS.

SINGLE OCCURRENCE

ALARM CODE	ALARM FAULT
00214	PROGRAM USING IMU WHEN IMU TURNED OFF
00777	A PIPA FAILED CAUSED ISS WARNING
01107	RESTART PHASE TABLE ENTRIES DISAGREE
01407	VG INCREASING
04777	ICDU AND PIPA FAILS CAUSED ISS WARNING
07777	IMU FAIL CAUSED ISS WARNING
10777	IMU AND PIPA FAILS CAUSED ISS WARNING
13777	IMU AND ICDU FAILS CAUSED ISS WARNING
14777	IMU, ICDU, AND PIPA FAILS CAUSED ISS WARNING
00205	MAXIMUM ACCELEROMETER OUTPUT

CONTINUOUS OCCURRENCE

ALARM CODE	ALARM FAULT
20430	INTEGRATION CAUSING OVERFLOW THAT RECTIFICATION WOULD NOT ELIMINATE
20607	NO SOLUTION FROM CONIC ROUTINE
20610	P37 POSITION VECTOR AT IGNITION TOO SMALL
21103	FORBIDDEN STEP EXECUTED
21204	ZERO OR NEGATIVE WAITLIST
21206	DISPLAY SYSTEM ADDRESS BUFFERS FULL
21210	JOB ALREADY WAITING IN PARTICULAR STALL ROUTINE
21302	SQUARE ROOT ARGUMENT TOO NEGATIVE
21501	DISPLAY SYSTEM ALARM FROM INTERNAL USE
21502	ILLEGAL REQUEST FOR A FLASHING DISPLAY
21521	NEW PROGRAM REQUEST CANNOT BE MADE AFTER P11 STARTED
31104	TOO MANY JOBS ATTEMPTING TO USE JOB

R	ITEM	
		DELAY ROUTINE
		31201 NO VAC AREAS AVAILABLE
		31202 NO JOB REGISTER SETS AVAILABLE
		31203 NEW TASK CANNOT BE INSERTED SUCCESSFULLY IN WAITLIST SYSTEM
		31207 NO VAC AREA AVAILABLE FOR MARK DATA
		31211 OPTICS USE NOT ALLOWED WITH EXTENDED VERB BEING PERFORMED
	5-5A CONT	

PARTICIPATION

GUIDANCE OFFICER

FLIGHT CREW

FLIGHT DIRECTOR

DATA SOURCES

CMC DSKY/PROGRAM ALARM LIGHT

GUID. INS/INJ DIGITALS, MSK 290

CMC MONITOR I H/S, MSK 966

CCATS CMC DOWNLINK READOUT

PROCEDURE

A. INDICATION

CREW OBSERVES PROGRAM ALARM LIGHT AND KEYS V05 N09 TO VERIFY ALARM. GDO OBSERVES PROGRAM ALARM LIGHT AND VERIFIES ALARM VIA CREW KEYING V05 N09 USING MSK 290 OR VIA FAILREGS USING MSK 966 OR CCATS CMC DOWNLINK READOUT.

B. ACTION

ALARM IS IDENTIFIED AS APPLICABLE TO A GO/NO-GO DECISION. IF IT IS IN ''CONTINUOUS'' CATEGORY DSKY ERROR RESET IS EXECUTED TO VERIFY RE-OCCURANCE. AFTER IDENTIFICATION GDO DECLARES'' CMC GO ON PROGRAM ALARM'' OR ''CMC NO-GO ON PROGRAM ALARM'' OVER FLIGHT DIRECTOR LOOP. CAPCOM RELAYS THE SAME OVER AIR-TO-GROUND LOOP.

R	ITEM
	5-5B

CRITERIA FOR CMC NO-GO FOR ABORT MANEUVER DETERMINATION AND/OR MONITORING TFF ERROR

COMMENTS

ERRONEOUS NAVIGATION BY THE CMC WILL BE REFLECTED IN ITS KNOWLEDGE OF TFF. SINCE THIS PARAMETER IS USED AS ABORT CRITERIA, ANY ERROR IN ITS COMPUTATION MUST BE LIMITED. CREW ABORT IS INITIATED FOR TFF DECREASING BELOW 1+40. THE TIME REQUIRED FOR 180 DEGREES PITCH ATTITUDE MANEUVER TO INSURE BEF IS 26 SECONDS. THUS FOR MOST SENSITIVE CASE, CMC TFF GREATER THAN RTCC TFF, AN ERROR OF 40 SECONDS CAN BE TOLERATED AND YET LEAVE TIME FOR REORIENTATION TO INSURE SAFE CAPTURE.

PARTICIPATION

GUIDANCE OFFICER

FLIGHT DIRECTOR

CAPCOM

FLIGHT CREW

DATA SOURCES

GDO STRIPCHARTS, GUIDANCE INS/INJ DIGITALS, MSK 29

PROCEDURE

A. INDICATION

GDO VERIFIES TFF TREND ON GDO STRIPCHARTS AND OBSERVES DIFFERENCE OF CMC AND RTCC TFF VALUES ON MSK 290 EXCEEDING LIMITS.

B. ACTION

GDO ANNOUNCES OVER FLIGHT DIRECTOR LOOP ''CMC NO-GO TFF ERROR''. CAPCOM RELAYS SAME TO CREW OVER AIR TO GROUND LOOP.

R	ITEM
	5-5C

CRITERIA FOR CMC NO-GO FOR ABORT MANEUVER DETERMINATION AND/OR MONITORING (ERROR IN X AND/OR Z PLATFORM AXIS NAVIGATED VELOCITY)

COMMENTS

SINCE THE CMC IS USED FOR ORBITAL NAVIGATION AND TO DETERMINE CONTINGENCY MANEUVER ACTION, SIGNIFICANT ERRORS IN ITS INPLANE NAVIGATIONAL STATE COULD ENDANGER THE CREW. SUCH ERRORS WILL BE IMMEDIATELY REFLECTED BY THE CMC KNOWLEDGE OF SENSED VELOCITY ALONG ITS X AND/OR Z PLATFORM AXIS. G AND N DISPERSION ANALYSIS HAS SHOWN THAT A CONFIRMED ERROR ALONG THE X AXIS OF GREATER THAN 50 FPS AND/OR Z AXIS OF GREATER THAN 100 FPS INDICATES SOME COMPONENT WITHIN THE CSM G AND N IS OPERATING AT AN UNRELIABLE LEVEL (APPROXIMATELY 9-SIGMA). THE CMC WILL BE DECLARED ''NO-GO'' DUE TO INABILITY TO NAVIGATE PROPERLY.

PARTICIPATION

GUIDANCE OFFICER

FLIGHT CREW

CAPCOM

DATA SOURCES

GDO STRIPCHARTS

GUIDANCE INSERTION/INJECTION DIGITALS, MSK 290

AGC DYNAMICS STARUS DISPLAY

PROCEDURE

A. INDICATION

GDO DETECTS AND OBSERVES A TREND ON X AND/OR Z AXIS VELOCITY DIFFERENCES FROM STRIPCHARTS OR MSK 290. CONFIRMATION THAT THE ERROR IS IN THE CMC IS THEN MADE BY COMPARING ACTUAL TRAJECTORY PATH WITH THAT OF CMC VIA THE AGC DYNAMIC STATUS DISPLAY.

B. ACTION

GDO ANNOUNCES CMC ''NO-GO'' DUE TO NAVIGATION ERROR OVER FLIGHT DIRECTOR LOOP, CAPCOM RELAYS SAME TO CREW OVER AIR TO GROUND LOOP.

R	ITEM
	5-5D

CRITERIA FOR CMC NO-GO FOR ABORT MANEUVER DETERMINATION AND/OR MONITORING (CMC/RTCC RECOMMENDATION DISAGREEMENT)

COMMENTS

AT TERMINATION OF LAUNCH PHASE POWERED FLIGHT, THE CMC WILL BE USED TO DETERMINE ORBITAL STATUS AND/OR CONTINGENCY MANEUVER REQUIREMENT. BECAUSE OF DEGRADED PERFORMANCE OF THE INERTIAL SUBSYSTEM COMPONENTS, THE CMC NAVIGATION COULD INDICATE A SAFE PERIGEE WHILE THE BEST TRAJECTORY SOURCE INDICATES A PERIGEE LESS THAN SAFE. THE CREW WOULD TAKE NO ACTION WITH DISASTEROUS RESULTS. ON THE OTHERHAND, THE CMC NAVIGATION COULD INDICATE A PERIGEE LESS THAN SAFE WHILE THE BEST TRAJECTORY SOURCE INDICATES A SATISFACTORY PERIGEE. THE CREW WOULD UNNECESSARILY SEPARATE FROM THE SIVB, MAKE A CONTINGENCY SPS MANEUVER, AND THEREBY SACRIFICE A LUNAR MISSION. THUS, ANYTIME THE ORBITAL GO/NO-GO RECOMMENDATIONS BASED ON BEST SELECTED SOURCE AND CMC TELEMETRY DISAGREE, THE CMC WILL BE DECLARED ''NO-GO''.

PARTICIPATION

GUIDANCE OFFICER

FLIGHT DYNAMICS OFFICER

DATA SOURCE

FDO LAUNCH DIGITALS, MSK 043

PROCEDURE

A. INDICATION

IN RTCC HOLD PHASE, FDO CALLS OUT THE BEST TRAJECTORY SOURCE. GDO OBSERVES THE ORBITAL RECOMMENDATIONS IN THE APL AND ''BEST SOURCE'' COLUMNS OF MSK 043.

B. ACTION

IF OBSERVED RECOMMENDATIONS ARE IN AGREEMENT, GDO CALLS OUT OVER FLIGHT DIRECTOR LOOP, CMC IS ''GO''. OTHERWISE, GDO CALLS OUT CMC IS ''NO-GO''. CAPCOM ADVISES CREW ACCORDINGLY.

R	ITEM
	5-6

THE ORBIT IS ''GO'' IF HP GREATER THAN OR EQUAL TO 75 N.M.

COMMENTS

A ''GO'' ORBIT MUST PROVIDE A LIFETIME OF ONE FULL REV WITHOUT DEGRADING OR FAILING SPACECRAFT SYSTEMS. THE EFFECTS OF AERODYNAMIC HEATING ON SPACECRAFT SYSTEMS DURING ONE PASS THROUGH PERIGEE ARE MORE CONSTRAINING THAN PROVIDING ''ORBITAL LIFETIME''. ORDNANCE IN THE SLA SEPARATION UNIT AND IN THE CM/SM UMBILICAL GUILLOTINE FAILS FOR PERIGEES LOWER THAN 71 N. M. AND 90 DEG ANGLE OF ATTACK. ATMOSPHERIC DENSITY, INITIAL TEMPERATURES, AND DRAG COEFFICIENTS CAUSE LITTLE CHANGE IN THE FAILURE ALTITUDE. A PAD FOR THE UNCERTAINTY IN PERIGEE ALTITUDE PREDICTION BY MCC ADDED TO THE ORDNANCE FAILURE ALTITUDE ESTABLISHED 75 N. M. AS THE MINIMUM PERIGEE ALTITUDE FOR A ''GO'' ORBIT.

PARTICIPATION

FLIGHT DYNAMICS OFFICER

FLIGHT DIRECTOR

CAPCOM

FLIGHT CREW

DATA SOURCES

PRIMARY, FDO LAUNCH DIGITALS, MSK 41.

SECONDARY, GAMMA VS. V DISPLAY MSK 40.

PROCEDURE

A. INDICATION

1. RTCC RECOMMENDS GO/NO GO.

2. V/VPS VERIFIES RECOMMENDATION.

3. V, GAMMA, H FROM SELECTED SOURCE VERIFIES RECOMMENDATION.

B. ACTION

1. HP GREATER THAN OR EQUAL TO 75 - FDO ANNOUNCES ''FLIGHT, WE ARE GO'' ON FD LOOP.

2. HP LESS THAN 75, - MODE IV - FDO ANNOUNCES ''FLIGHT, WE ARE GO MODE IV, SEPARATE'' ON FD LOOP. PASS MODE IV MANEUVER ASAP. CAPCOM WILL RELAY REPORT AND MANEUVER TO CREW.

3. HP LESS THAN 75, APOGEE KICK - FDO ANNOUNCES ''FLIGHT, WE ARE GO, APOGEE KICK, SEPARATE'' ON FD LOOP. PASS APOGEE KICK MANEUVER ASAP. CAPCOM WILL RELAY REPORT AND MANEUVER TO CREW.

4. HP LESS THAN 75, NO POSSIBLE MODE IV OR APOGEE KICK - FDO ANNOUNCES ''FLIGHT, WE ARE NO GO, SEPARATE'' ON FD LOOP. RETRO FOLLOWS WITH ABORT MODE AND MANEUVER IF MODE III CAPCOM RELAYS REPORTS AND MANEUVER TO CREW.

R	ITEM
	5-20A

EARTH ORBITAL ALTITUDE CONSTRAINT

COMMENTS

THE MINIMUM PERIGEE ALTITUDE LIMIT IS ESTABLISHED TO PROTECT AGAINST ATMOSPHERIC HEATING CAUSING DAMAGE TO S/C. TO PROTECT AGAINST THIS DAMAGE, PERIGEE MUST BE MAINTAINED ABOVE 75 N.M. VIOLATIONS OF THIS LIMIT MUST BE CORRECTED ASAP. FOR PLANNING PURPOSES IT IS DESIRABLE TO ALLOW FOR REASONABLE EXECUTION ERRORS WITHOUT VIOLATING THIS CONSTRAINT. 85 N.M. ALLOWS FOR THESE ERRORS WITHOUT SERIOUSLY LIMITING PLANNING FLEXIBILITY.

THE MAINTENANCE OF RCS DEORBIT CAPABILITY DEFINES THE MAXIMUM PERIGEE ALTITUDE AT ANY GIVEN POINT DURING THE MISSION. HOWEVER, WHEN THE CONSIDERATION OF LM PROPULSION IS ADVANTAGEOUS, THIS LIMIT MAY BE RAISED.

CURRENTLY, NO CONSTRAINTS HAVE BEEN DEFINED WHICH WOULD LIMIT THE MAXIMUM APOGEE ALTITUDE.

PARTICIPATION

FDO

RFO

FD

G AND C

CREW

DATA SOURCES

MISSION PLANNING DISPLAYS, ORBIT DIGITALS

PROCEDURES

A. NORMAL MISSION PLANNING.

1. G AND C DETERMINES RCS DELTA V AVAILABLE FOR DEORBIT THROUGH NEXT MANEUVER.

2. FDO/RFO DETERMINE MAXIMUM PERIGEE ALTITUDE FOR DELTA V. USE NOMINAL PERIGEE IF LOWER THAN MAXIMUM.

3. FDO DETERMINE APOGEE ALTITUDE WHICH PROVIDES LIFETIME THROUGH END OF MISSION. USE NOMINAL APOGEE IF HIGHER.

4. CALL GPMT FOR MANEUVER OVER A MSFN STATION TO RESULT IN HA AND HP DESIRED.

B. PERIGEE VIOLATION. CALL PERIGEE ADJUST TABLE FOR MANEUVER AT APOGEE OR ASAP IF ADJUSTMENT AT APOGEE IS IMPOSSIBLE BECAUSE OF TRUE ANOMALY OR PREMANEUVER MSFN COVERAGE. FDO ORBIT DIGITALS SHOW TIME OF APOGEE AND TRUE ANOMALY PROBLEMS AND PSAT SHOWS MSFN COVERAGE.

R	ITEM
	5-20B

EMERGENCY DEORBIT WITH HP LESS THAN 75 N.M.

COMMENTS

A. IT IS ASSUMED THAT AN ORBITAL MANEUVER CANNOT BE MADE TO CORRECT THE HP LESS THAN 75 NM PROBLEM.

B. ANY MANEUVER PERFORMED WILL BE TO REDUCE HP LESS THAN 40 NM TO INSURE A SAFE REENTRY.

C. THE SPS THRUSTER WILL BE USED WHENEVER POSSIBLE. WHEN THE RCS THRUSTER IS USED, IT WILL BE AS CLOSE TO APOGEE AS POSSIBLE TO GET MAXIMUM DELTA V EFFICIENCY.

D. TARGETING WILL BE DONE WHERE POSSIBLE (TRUE ANOMALY LESS THAN 180 DEG) AND TIME PERMITS.

PROCEDURE

A. IF HF IS GREATER THAN 40 NM BUT LESS THAN 75 NM ---

1. TRUE ANOMALY GREATER THAN 180 DEG - IF SPS IS GO, CREW WILL GO TO SPS DEORBIT ATTITUDE (HEADS UP, HORIZON MONITOR). IF SPS IS NO-GO, CREW WILL GO TO RCS DEORBIT ATTITUDE (HEADS DOWN, RETROGRADE). CREW PERFORMS MANEUVER ASAP TO LOWER HP TO AT LEAST 40 NM IF POSSIBLE. CREW WILL BURN ALL RCS DELTA V AVAILABLE TO ACHIEVE 40 NM OR WILL TERMINATE BURN WHEN TFF EQUALS 7 MIN. GROUND WILL PROVIDE PITCH AT ENTRY GET .05G AND ENTRY PROFILE. IF NO VOICE, CREW WILL FLY A RL 90 ENTRY.

2. TRUE ANOMALY LESS THAN 180 DEG - CREW WILL GO TO RCS DEORBIT ATTITUDE. GROUND WILL PROVIDE TIG DELTA V PITCH AT ENTRY GET .05G AND ENTRY PROFILE. MANEUVER WILL BE PLANNED FOR EXECUTION AT APOGEE.

B. IF HP LESS THAN 40 NM AND---

1. TRUE ANOMALY GREATER THAN 180 DEG - NO BURN, GROUND WILL PROVIDE PITCH AT ENTRY, GET .05G AND ENTRY PROFILE. ENTRY PROFILE BASED ON LAND IP EVALUATION.

2. TRUE ANOMALY LESS THAN 180 DEG - GROUND MAY PROVIDE AN RCS MANEUVER IF TARGETING FOR AN IP IS POSSIBLE.

R	ITEM
	5-22

LIFT-OFF TIME UPDATE

COMMENTS

AT LIFT-OFF INDICATION, THE CMC RECORDS THE COMPUTER TIME, ZEROS THE TIME REGISTERS, AND UPDATES TEPHEMERIS BY ADDING THE RECORDED LIFT-OFF TIME TO THE PREVIOUSLY STORED VALUE. THE TEPHEMERIS QUANTITY IS THE TOTAL ELAPSED TIME FROM REFERENCE (BASSELIAN) COORDINATE SYSTEM DEFINITION TO LAST COMPUTER CLOCK ZERO. THE TEPHEMERIS QUANTITY AND COMPUTER CLOCK TIME ARE UTILIZED IN THE NAVIGATION SCHEMES FOR DETERMINING EARTH LOCATION RELATIVE TO THE REFERENCE COORDINATE FRAME. BECAUSE OF THE GROUND/CMC OR LM INTERFACE FOR MANEUVER PREPARATION AND TRAJECTORY MONITORING, IT IS ESSENTIAL FOR BOTH TIME BASES TO BE THE SAME. FOR THIS REASON, THE CMC L/O TIME IS USED, AVOIDING A CMC UPDATE. NOMINALLY THE GND AND CMC L/O SHOULD HAVE A DIFFERENCE OF LESS THAN 0.5 SECOND.

IF THE CMC GMTLO DIFFERS FROM THE SRO GMTLO (FIRST MOTION), THE G & N PLATFORM IS IN ERROR (ROLL PROGRAM OF SATURN STARTS AT LIFT-OFF PLUS 10 SECONDS) THUS THE G & N IS IN ERROR AND NOTHING CAN BE GAINED BY USING THE CMC GMTLO. ALSO, THE MET IN THE CSM STARTS WITH FIRST MOTION AND USING A GMTLO DIFFERENT FROM FIRST MOTION CAUSES THE GROUND ELAPSED TIME TO BE DIFFERENT FROM THE S/C ELAPSED TIME. THE PROBABILITY OF A DIFFERENCE GREATER THAN 5 SECONDS IS REMOTE SINCE THE CREW IS POISED TO BACK UP THE LIFT-OFF SIGNAL TO THE CMC BY ENTERING V75 WHICH WAS INSERTED INTO THE DSKY IN PRELAUNCH.

DATA SOURCE

GDO STATE BUFFER MONITOR, MSK267, VOICE LOOP TO SRO.

PROCEDURE

RFO OBSERVES EVENT FROM CMC ON MSK267 TO OBTAIN CMC GMTLO. AFTER RECEIPT OF GMTLO FROM SRO, THE APPROPRIATE VALUE IS INPUT TO THE RTCC VIA THE COMPUTER DYNAMICS.

R	ITEM
	5-23

RETROFIRE MANEUVER PLANNING TO RESULT IN THE TIME BETWEEN GETI AND 400K GREATER THAN 9 MINUTES

COMMENTS

A. THE TIME BETWEEN RETROFIRE IGNITION AND 400K FEET IS CONSTRAINED FOR TWO MAIN REASONS. FIRST, A POSSIBLE RECONTACT PROBLEM BETWEEN THE CM AND SM. SECOND, A CREW PREPARATION TIME FOR ENTRY AFTER RETROFIRE.

B. THE CREW DESIRES AS MUCH TIME AS POSSIBLE AFTER RETROFIRE TO PREPARE FOR ENTRY-- HOWEVER, THE CREW HAS STATED THAT, AS A MINIMUM, 10 MINUTES TFF AFTER RETROFIRE (10 MINUTES TO 300K FEET) IS AN OPERATIONALLY GOOD NUMBER WHICH INCLUDES ANY CONTINGENCY PROCEDURES WHICH MAY BE REQUIRED. IN GENERAL, FOR SPS-TYPE RETROFIRES, TIME BETWEEN 400K FEET AND 300K FEET IS 2 MINUTES-- THUS, FOR RETROFIRE PLANNING PURPOSES, THE TFF AFTER THE RETRO MANEUVER WILL BE AT LEAST 11 MINUTES BASED ON 9 MINUTES TO 400K FEET PLUS 2 MINUTES TO 300K FEET. FOR CONTINGENCY TYPE RETRO MANEUVER, THE CREW IS REQUIRED TO BURN TO A LOWER TFF TO INSURE A SAFE ENTRY.

C. IN ATTEMPTING TO GET MORE TIME BETWEEN GETI AND 400K FEET-- PITCH ANGLE AT GETI, DELTA V OF THE MANEUVER, OR THE TARGET POINT CAN BE CHANGED. VARYING THE PITCH ANGLE AT GETI WILL NOT BE DONE BECAUSE, OPERATIONALLY, MAINTAINING THE LINE ON THE WINDOW OF THE SPACECRAFT ON THE HORIZON IS DESIRABLE. CHANGING THE TARGET POINT HAS VERY LITTLE EFFECT ON TFF EXCEPT WHEN LARGE CHANGES ARE MADE.

PROCEDURE

IF THE PLANNING MANEUVER HAS RET 400K LESS THAN 9 MINUTES, RFO WILL VARY DELTA V TO INCREASE THE TIME. IF UNSUCCESSFUL, INFORM FD THAT A NEW PTP MUST BE SELECTED BECAUSE OF THE TFF CONSTRAINTS.

REFERENCES

FM MEMORANDUM 67-FM37-437

R	ITEM
	5-25

UPDATING RETROFIRE MANEUVERS FOR POSITION CHANGES

COMMENTS

A. ONCE THE CMC HAS BEEN UPDATED FOR RETROFIRE WITH A NAV VECTOR, THE GROUND AND CMC'S KNOWLEDGE OF THE PRESENT CSM ORBIT IS THE SAME. HOWEVER, AS THE GROUND RECEIVES MORE TRACKING DATA, ITS KNOWLEDGE OF THE ACTUAL CSM'S ORBIT IMPROVES. THUS, THE PROBLEM ARISES AS TO WHAT CRITERIA TO USE TO UPDATE THE CMC'S STATE VECTOR.

B. IN THE EVENT THE CMC NAV VECTOR IS NOT UPDATED, A TARGET MISS EQUAL TO THE POSITION ERROR OF THE CMC WILL RESULT AT SPLASHDOWN. IF THE CMC IS CONTINUALLY UPDATED OR UPDATED JUST PRIOR TO RETROFIRE, PROCEDURAL PROBLEMS RESULT FOR THE CREW SUCH AS RECHECKING MANEUVER DATA AS WELL AS CYCLING THROUGH CMC PROGRAMS AT THE LAST MINUTE.

C. PROCEDURALLY, THE GROUND WILL SCHEDULE NAV UPDATES APPROXIMATELY 4 HOURS AND 1 HOUR PRIOR TO THE PLANNED RETROFIRE. CRITERIA FOR UPDATING AT RETROFIRE MINUS 1 HOUR IS BASED ON FDO'S COORDINATED JUDGEMENT (APPROXIMATELY 1.5 N.M. IN POSITION OR 1 FPS IN VELOCITY).

D. UPDATING THE CMC NAV AFTER THE 1 HOUR UPDATE CAUSES THE CREW PROCEDURAL PROBLEM SUCH AS RUSHING THROUGH CMC PROGRAMS AND DOING THE REQUIRED LAST MINUTE RETROFIRE CHECKS. FOR THIS REASON UP TO 30 N.M. POSITION CHANGE WAS CHOSEN AS ACCEPTABLE FROM THE RETROFIRE STAND-POINT. THIS WOULD MEAN THE CMC COULD MISS THE TARGET POINT BY AS MUCH AS 30 N.M. WHICH IS SLIGHTLY LARGER THAN AN EMS 1 SIGMA MISS DISTANCE. AS RETROFIRE TIME APPROACHES, THE UPDATE CRITERIA BECOMES MORE RELAXED.

E. IT SHOULD BE POINTED OUT THAT ALTHOUGH 30 N.M. POSITION CHANGE IS ACCEPTABLE FROM A RETROFIRE STANDPOINT, THIS LARGE A POSITION CHANGE IS HIGHLY UNLIKELY. A CHANGE OF MORE THAN 5 N.M. WOULD BE RARE.

F. TO REDUCE THE PROBABILITY OF A RETROFIRE UPDATE WITHIN 30 MINUTES OF GETI, THE CRITERIA FOR AN UPDATE IS THAT LANDING ERROR WHICH CAUSES A VIOLATION OF RECOVERY ACCESS TIME (2DEG OF LONGITUDE). THIS ERROR IS SO LARGE THAT IT IS ALMOST A PHYSICAL IMPOSSIBILITY.

PROCEDURE

THE PROCEDURE USED TO DETERMINE POSITION ERRORS ENCOUNTERED FROM THE ORIGINAL NAV VECTOR UPLINKED TO THE S/C IS TO COMPARE THE CMC TM VECTOR WITH THE PRESENT ORBIT VECTOR ON THE VECTOR COMPARE DISPLAY. THIS DISPLAY IS USED AFTER EACH DC TAKEN IN BY THE RTCC AND IS ALSO USED IN DECIDING TO UPDATE THE T-1 HOUR NAV VECTOR.

REFERENCE

ENTRY DATA PRIORITY MEETINGS.

R	ITEM
	5-27

SPS FAILURES DURING EPO RETROFIRE OR NO SLA SEP

COMMENTS

A. RETROFIRE SPS FAILURES INCLUDE NO SPS BURNS AND PARTIAL SPS BURNS. PERIGEE ALTITUDE IS USED TO DETERMINE THE APPROPRIATE ACTION THE CREW SHOULD TAKE SINCE THE HP VALUE IS A G AND N OUTPUT AFTER SPS C/O.

B. THE SPS FAILURES FALL INTO THREE AREAS AS A FUNCTION OF HP---

1. FOR HP'S GREATER THAN 75 N.M. THE VEHICLE IS STILL IN A SAFE ORBIT AND A NEW PTP CAN BE CHOSEN, USING THE RCS.

2. FOR HP'S BELOW 75 N.M., BUT ABOVE 40 N.M., THE S/C IS NOT ON A SAFE REENTRY TRAJECTORY AND NOT IN A SAFE ORBITAL TRAJECTORY DUE TO HEATING THAT THE S/C WILL ENCOUNTER. ALL ACTION INVOLVING THIS CASE IS TO ASSURE A SAFE ENTRY BELOW HP OF 40 N.M. AND ATTEMPT TO OBTAIN THE TARGET POINT.

3. FOR HP'S LESS THAN 40 N.M., THE S/C HAS A SAFE ENTRY, BUT IN A LARGE NUMBER OF CASES, THE TARGET IS NOT WITHIN THE AVAILABLE FOOTPRINT. ALL ACTION IN THIS CASE INVOLVES USING ONLY THE SM DELTA V TO BURN RESIDUALS TO ZERO.

C. IN THE EVENT THE SLA PANELS FAIL TO SEPARATE, THE S/C IS LEFT WITHOUT AN SPS ENGINE AND INSUFFICIENT DELTA V TO REENTER WITH THE COMBINED SM + CM RCS DELTA V. (NOMINALLY 170 FPS IS NEEDED FOR ENTRY-- THE SM DELTA V = 35 FPS-- THE CM DELTA V = 80 FPS). THE LOX DUMP CAPABILITY PROVIDES SUFFICIENT DELTA V TO REDUCE THE HP WELL BELOW 75 N.M.-- HOWEVER, THE CONTROL OF DELTA V CUTOFF FROM THE GROUND, THE BURN TIME INVOLVED (APPROX. 20 MIN), PLUS THE UNKNOWN RECONTACT PROBLEMS DUE TO S-IVB EXPLOSIONS DURING ENTRY MAKE REENTERING THE WHOLE STACK WITH LOX DUMP UNDESIRABLE. ORBIT SHAPING TO REDUCE THE NEEDED DELTA V TO DEORBIT WITH THE CM RCS CAPABILITY IS A MORE OPERATIONALLY SOUND METHOD OF UTILIZING THE LOX DUMP CAPABILITY.

D. MORE SM DELTA V CAN BE OBTAINED BY REDUCING THE WEIGHT OF THE S-IVB/CSM STACK. THERE IS APPROXIMATELY 100,000 POUNDS OF LOX ONBOARD THAT CAN BE DUMPED THUS CHANGING THE SM DELTA V FROM 35 FPS TO APPROXIMATELY 55 FPS. THE LOX DUMP IS OF COURSE PROPULSIVE AND IS A TIME CONSUMING PROCESS. (LOX DUMP RATE IS APPROXIMATELY 1000 POUNDS/MIN). THIS MODE OF OPERATION DOES NOT APPEAR DESIRABLE UNLESS A CONTINGENCY EXISTS WHERE A LARGE DELTA V IS REQUIRED.

E. THE HYBRID TYPE RETROFIRE WILL ALWAYS BE TARGETED FOR 40 N.M. PERIGEE TO CONSERVE AS MUCH CM RCS FUEL AS POSSIBLE. THE USE OF THE SM RCS DELTA V DOES NOT APPEAR PRACTICAL FOR THE HEAVY S-IVB/CSM STACKS DUE TO THE SMALL DELTA V GAINED OVER A LONG PERIOD OF TIME (ACCELERATION IS APPROXIMATELY 0.04 TO 0.05 FPS).

PROCEDURE

A. FOR HP LESS THAN 75 N. M. BUT GREATER THAN 40 N. M., SOME TYPE OF RCS MANEUVER ACTION IS MANDATORY FOR THE RECOVERY OF THE S/C. THE MOST EFFICIENT USE OF THE SM RCS AND CM RCS IS TO APPLY DELTA V AT A RETROGRADE PITCH ATTITUDE DIRECTLY AGAINST THE VELOCITY VECTOR. THIS REDUCES HP AS FAST AS POSSIBLE. THIS PROCEDURE ASSUMES THE TRUE ANOMALY IS GREATER THAN 180 DEG. IF THE TRUE ANOMALY IS LESS THAN 180 DEG, THE CREW SHOULD DELAY IGNITION UNTIL 180 DEG-- HOWEVER, THIS SITUATION WOULD BE RARE AND VERY NON-NOMINAL.

B. FOR HP LESS THAN 75 N. M. BUT GREATER THAN 40 N. M., THE RCS MANEUVER CUTOFF CRITERIA IS BASED ON FUEL AVAILABLE, WHICH WILL BE KNOWN PRIOR TO ANY RETROFIRE MANEUVER. THE C/O CRITERIA IS AS FOLLOWS---

1. SM FUEL IS NOT SUFFICIENT TO OBTAIN HP LESS THAN 40 N.M. FOR THIS CASE, A HYBRID TYPE MANEUVER WILL BE USED (BURN AVAILABLE SM DELTA V-- COMPLETE MANEUVER TO HP = 40 N.M. WITH CM RCS). THE CREW WILL ALWAYS FLY RL90 ENTRY.

2. SM FUEL IS NOT A CONSTRAINING FACTOR. THIS SITUATION MAY EXIST EARLY IN THE MISSION OR WHEN THE SPS CUTOFF WAS CLOSE TO NOMINAL. THE SM RCS CUTOFF CRITERIA IS BASED ON OBTAINING THE DESIRED HP OR A TFF = 7 MINUTES WHICHEVER COMES FIRST. THIS PROCEDURE ALLOWS THE S/C TO GET TO THE TARGET OR AS CLOSE TO THE TARGET AS POSSIBLE.

R	ITEM
	5-28

CMC GO/NO GO CRITERIA

TO COMMIT THE G AND N FOR ENTRY TWO TRAJECTORY CONDITIONS MUST BE MET.

1. A CHECK OF THE NAVIGATION OF THE G AND N THROUGH THE RETROFIRE TO .2G IS MADE BY COMPARING A GROUND VALUE OF DOWNRANGE ERROR WITH THAT COMPUTED BY THE CMC. DOWNRANGE ERROR IS COMPUTED BY DIFFERENCING THE ENTRY RANGE BASED ON A CMC REFERENCE TRAJECTORY WITH THE RANGE TO THE TARGET FROM .2G. THE COMPARISON ACCURACY DEPENDS ON THE SOURCE USED TO OBTAIN THE PREDICTED DOWNRANGE ERROR. MPAD REPORTS THAT USING THE RTCC A COMPARISON OF +/- 100 NM IS ACCEPTABLE.

2. THE G AND N MUST BE OPERATED IN A GIVEN ENTRY CORRIDOR AS DEFINED BY MPAD.

COMMENTS

1. IF THE DOWNRANGE ERROR IS UNACCEPTABLE OR THE ENTRY CORRIDOR IS VIOLATED, THE CREW WILL FLY A BACKUP ENTRY PROFILE. (EMS OR BRB)

2. THE G AND N WOULD FAIL A DRE CHECK DUE TO IMPROPER NAVIGATION AFTER RETROFIRE. THE DRE CHECK WOULD ALSO FAIL FOR IMPROPER G AND N ENTRY COMPUTATIONS-- EITHER OF THESE FAILURES COULD POSSIBLY CAUSE CREW SAFETY PROBLEMS SUCH AS HIGH G'S OR LARGE TARGET MISS DISTANCES.

R	ITEM
	5-29

CRITERIA FOR PERFORMING LAUNCH VEHICLE NAVIGATION OR TARGET UPDATES.

COMMENT

A. AN IU STATE VECTOR UPDATE WILL BE EXECUTED FOR IU ACCELEROMETER FAILURE(S) PRIOR TO EARTH ORBIT INSERTION OR IU NAVIGATION DISPERSIONS EXCEEDING 6 SIGMA. AN UPDATE WILL NOT BE PERFORMED FOR IU GUIDANCE REFERENCE FAILURES SINCE TLI WILL BE EXECUTED BY CMC CONTROL. A SECOND UPDATE WILL BE PERFORMED FOR SLIPS TO SECOND OPPORTUNITY AFTER A FIRST OPPORTUNITY UPDATE.

UPDATING FOR IU ACCELEROMETER FAIL(S) IS NECESSARY SINCE THE ONBOARD STATE VECTOR IS EFFECTIVELY INVALIDATED BY BACKUP SCHEME INPUTS WHICH ASSUME THAT CERTAIN PERTURBATIONS ARE PRESENT, FOR EXAMPLE, THAT BOTH UPPER STAGES ARE 3 SIGMA LOW IN THRUST. THE BACKUP SCHEME DOES PROVIDE ENOUGH ACCURACY TO ACHIEVE A SAFE PERIGEE ORBIT.

THE IU NAVIGATION STATE WILL BE UPDATED WHEN ERRORS EXIST THAT MIGHT COMPROMISE THE PRIMARY MISSION, I.E. UNACCEPTABLE MIDCOURSE CORRECTIONS. THE UNACCEPTABLE MIDCOURSE LIMIT IS ESTABLISHED AS 100 FPS AT 3HR 30 MIN AFTER TLI CUTOFF FOR EITHER TLI OPPORTUNITY. DISPERSIONS BASED ON 6 SIGMA PLATFORM AND VENTING UNCERTAINTIES WERE FOUND BY MSFC TO BOUND THE MIDCOURSE CONSTRAINT. THEREFORE, ERROR CRITERIA BASED ON THESE LIMITS WILL BE USED TO EXECUTE AN UPDATE.

IT IS DESIRABLE TO GENERATE THE STATE VECTOR UPDATE TIME- TAGGED AS CLOSE TO THE START OF TIMEBASE 6 AS POSSIBLE. IT IS ALSO DESIRABLE, THOUGH NOT MANDATORY, TO OBSERVE INCORPORATION OF THE UPDATE BY THE IU. THUS, THE STATE VECTOR WILL BE TIME-TAGGED TO OCCUR AT THE MID-POINT OF THE LAST SITE PRIOR TO INITIATION OF TIMEBASE 6.

B. THERE ARE NO KNOWN MISSION CONTINGENCY SITUATIONS FOR WHICH AN IU ORBIT TARGET UPDATE WILL BE EXECUTED.

PARTICIPATION

GUIDANCE OFFICER

FLIGHT DYNAMICS OFFICER

BOOSTER SYSTEMS ENGINEER

FLIGHT DIRECTOR

DATA SOURCES

LVDC TELMETRY AND MSFN VECTOR

GUIDO INS/INJ DIGITALS, MSK 290

VECTOR COMPARE, MSK 1590

SLV NAV UPDATE, MSK 235

PROCEDURE

ONCE THE ACCELEROMETER FAILURE OR IU NAVIGATION DISPERSION OCCURS A MSFN BEST ESTIMATE OF THE ACHIEVED ORBITS IS DETERMINED. A TLI SOLUTION FOR THE DESIRED OPPORTUNITY IS VERIFIED USING THE MSFN DEFINED ORBIT IN IU NAVIGATION DISPERSION SITUATIONS.

DOWNRANGE POSITION, SEMI-MAJOR AXIS, AND CROSSRANGE VELOCITY ARE EVALUATED AGAINST THE MSFN BEST VECTOR. IF ESTABLISHED LIMITS IN TERMS OF THESE THREE PARAMETERS ARE VIOLATED AN IV STATE VECTOR IS EXECUTED. ONCE UPDATED DECISION IS MADE GUIDANCE COORDINATES WITH BOOSTER SYSTEMS ENGINEER ON PREPARATION OF THE UPDATE LOAD. THE BOOSTER SYSTEMS ENGINEER PERFORMS UPLINK AND VERIFIES ONBOARD INCORPORATION.

R	ITEM
	5-32

CRITERIA FOR TLI NO GO BASED ON MISALIGNMENT RATES BETWEEN THE IU AND IMU. (PLATFORM DRIFT)

COMMENTS

THE TRANSLUNAR INJECTION BURN WILL NOT BE PERFORMED IF EITHER GUIDANCE SYSTEM, LAUNCH VEHICLE OR SPACECRAFT, IS UNACCEPTABLY DEGRADED. DETERMINATION OF EXCESSIVE FREE-FLIGHT GYRODRIFT IS MADE BY CONTINUALLY COMPARING DIFFERENCES BETWEEN IU AND IMU GIMBAL ANGLES TO VERIFY THAT EACH SYSTEM CAN RELIABLY MAINTAIN KNOWLEDGE OF ITS INERTIAL POSITION. A DRIFT OF MORE THAN 0.6 DEG/HR (APPROXIMATELY 15-18 SIGMA) INDICATES AN UNRELIABLE IU REFERENCE, ALLOWING MORE THAN 1.0 DEGREE OF ATTITUDE MISALIGNMENT AT TLI. A DRIFT OF 1.5 DEG/HR (100 MERU) IN THE IMU IS CONSIDERED A FAILED SYSTEM. IF THE ABOVE RATES ARE EXCEEDED IN EITHER SYSTEM TLI WILL BE NO-GO.

PARTICIPATION

GUIDANCE OFFICER

FLIGHT DIRECTOR

FLIGHT CREW

DATA SOURCES

GUIDANCE STRIPCHARTS

GUIDANCE INSERTION/INJECTION DIGITALS, MSK 290

PROCEDURE

(SAME AS 5-35A)

REFERENCE

''A REVIEW OF THE TLI GO/NO-GO CRITERIA FOR THE C-PRIME MISSION,'' TRW NOTE NO. 68-FMT-714, DATED 26 NOVEMBER 1968

R	ITEM
	5-34

DISPERSED TLI CUTOFF

COMMENTS

FOR LARGE DISPERSIONS AT TLI CUTOFF, THE PRIMARY DECISION TO BE MADE IS WHETHER TO CONTINUE WITH A LUNAR MISSION OR TO PROCEED WITH AN EARTH ORBIT ALTERNATE. THE DECISION MUST BE MADE RELATIVELY QUICK BECAUSE IF THE DECISION IS MADE TO GO LUNAR, THE FIRST MCC MAY HAVE TO BE MOVED UP IN TIME SO AS TO AFFORD A SMALLER PROPELLANT PENALTY. THE KEY FACTOR AFFECTING THIS QUANTITY IS THE PROPELLANT REMAINING FOR CSM UNDOCKED MANEUVERING. THE CRITERIA CHOSEN IS BASED ON A DELTA V REQUIREMENT OF 5500 FPS REMAINING FOR CONTINUING WITH A LUNAR MISSION. THE NUMBER WAS CHOSEN BY CONSIDERING THE DELTA V REQUIRED TO DO A DIRECT ABORT AT APPROXIMATELY THE SPHERE (A DELTA V OF ABOUT 4500 FPS) PLUS REASONABLE PADS FOR MIDCOURSES ON THE WAY BACK (1000 FPS). TO MAXIMIZE THE MISSION CAPABILITIES, THE FIRST MCC WILL BE MOVED AS CLOSE AS POSSIBLE TO THE END OF TD AND E.

PARTICIPATION

FLIGHT DYNAMICS TEAM/FD.

DATA SOURCES

MCC TRADEOFF DISPLAY.

PROCEDURES

FDO DETERMINES DELTA V REMAINING AFTER COMPUTING BAP MCC AND ADVISE FD OF MISSION CAPABILITY.

R	ITEM
	5-35A

CRITERIA FOR LAUNCH VEHICLE IU OR CMC TLI GO/NO-GO BASED ON DIFFERENCES BETWEEN IU AND CMC VELOCITY COMPONENTS

COMMENTS

THE TRANSLUNAR INJECTION BURN WILL NOT BE PERFORMED IF EITHER GUIDANCE SYSTEM, LAUNCH VEHICLE OR SPACECRAFT, IS UNACCEPTABLY DEGRADED. IN ORDER TO DETECT DEGRADED PERFORMANCE IN EITHER SYSTEM, VELOCITY COMPONENT DIFFERENCES BETWEEN THE TWO SYSTEMS ARE MONITORED DURING LAUNCH PHASE. THE DIFFERENCE LIMITS FOR WHICH TLI IS NO-GO ARE---

DELTA X DOT GREATER THAN OR EQUAL TO +/- 38 FPS (X DOT - VELOCITY ALONG IMU X-AXIS)

DELTA Y DOT GREATER THAN OR EQUAL TO +/- 73 FPS (Y DOT - VELOCITY ALONG IMU Y-AXIS)

DELTA Z DOT GREATER THAN OR EQUAL TO +/- 87 FPS (Z DOT - VELOCITY ALONG IMU Z-AXIS)

DELTA VT GREATER THAN OR EQUAL TO +/- 34 FPS VT - TOTAL INERTIAL VELOCITY)

THESE LIMITS ARE BASED ON THE RSS OF COMBINED 9-SIGMA IMU HARDWARE ERROR SOURCES AND 3-SIGMA IU PLATFORM HARDWARE ERROR SOURCES. SHOULD THE LIMITS BE EXCEEDED IT CAN BE CONCLUDED THAT ONE OF THE TWO SYSTEMS ISN'T OPERATING PROPERLY OR RELIABLY AND TLI WILL BE NO-GO. THE FAILURE SITUATION WILL ALSO BE SUBSTANTIATED BY CHECKING SELECTING ORBITAL PARAMETERS BASED ON NAVIGATION IN EACH SYSTEM AND PLATFORM DRIFT ANALYSIS.

PARTICIPATION

GUIDANCE OFFICER

FLIGHT DYNAMICS OFFICER

FLIGHT DIRECTOR

FLIGHT CREW

DATA SOURCES

GUIDANCE STRIPCHARTS

GUIDANCE INSERTION/INJECTION DIGITALS, MSK 290

AGC DYNAMIC STATUS DISPLAY

VECTOR COMPARE DISPLAY, MSK 1590

PROCEDURE

ACTION

GDO DETECTS AND CONFIRMS FROM THE GUIDANCE STRIPCHARTS OR GUIDANCE INSERTION/INJECTION DIGITALS (MSK 290) THAT ONE OR MORE COMPONENT DIFFERENCE LIMIT HAS BEEN VIOLATED. ONCE THE SYSTEM FAILURE HAS BEEN DETERMINED IT IS FURTHER VERIFIED BY ANALYZING SELECTED ORBITAL PARAMETERS BASED ON THE ONBOARD NAVIGATION STATE VECTOR.

REFERENCE

"A REVIEW OF THE TLI GO/NO-GO CRITERIA FOR THE C-PRIME MISSION", TRW NOTE NO. 68-FMT-714, DATED 26 NOVEMBER 1968.

R	ITEM
	5-35B

CRITERIA FOR LAUNCH VEHICLE IU TEMPORARY NO-GO BASED ON DIFFERENCE BETWEEN IU AND CMC VELOCITY COMPONENTS

COMMENTS

THE TRANSLUNAR INJECTION BURN WILL NOT BE PERFORMED IF EITHER GUIDANCE SYSTEM, LAUNCH VEHICLE OR SPACECRAFT, IS UNACCEPTABLY DEGRADED. IN ORDER TO DETECT DEGRADED PERFORMANCE IN EITHER SYSTEM VELOCITY COMPONENT DIFFERENCES BETWEEN THE TWO SYSTEMS ARE MONITORED DURING LAUNCH. IF DIFFERENCES FALL IN THE FOLLOWING RANGES TLI IS TEMPORARILY NO-GO.

DELTA X DOT IS BETWEEN +/- 7.4 AND +/- 35 FPS

DELTA Y DOT IS BETWEEN +/-45 AND +/- 77 FPS

DELTA Z DOT IS BETWEEN +/-27 AND +/-82 FPS

DELTA VT IS BETWEEN +/- 13 AND +/- 33 FPS

(X DOT, Y DOT, Z DOT, VT DEFINED IN RULE 5-35A)

THE ABOVE THRESHOLD VALUES ARE BASED ON THE RSS OF 9-SIGMA IU PLATFORM HARDWARE ERROR SOURCES. IF THESE THRESHOLD VALUES ARE EXCEEDED IT INDICATES THERE IS AN ANOMALY IN A IMU ERROR SOURCE OR AN IU ERROR SOURCE HAS DEGRADED ABOVE 9-SIGMA. VIOLATION THEREFORE JUSTIFIES CALLING TLI TEMPORARILY NO-GO UNTIL INDEPENDENT CONFIRMATION THAT THE SUSPECT SYSTEM IS THE IU. IF IT IS THE DEGRADED SYSTEM TLI IS NO-GO. THIS IS DONE BY COMPARING SELECTED ORBITAL PARAMETERS BASED ON THE ONBOARD STATE VECTORS WITH THE TRUE NAVIGATION STATE (SEE RULE 5-35C AND 5-36) AND BY PLATFORM DRIFT ANALYSIS.

PARTICIPATION

GUIDANCE OFFICER

FLIGHT DYNAMICS OFFICER

FLIGHT CREW

DATA SOURCES

GUIDANCE STRIPCHARTS

GUIDANCE INSERTION/INJECTION DIGITALS, MSK 290

AGC DYNAMICS STATUS DISPLAY

VECTOR COMPARE DISPLAY, MSK 1590

PROCEDURE

(SAME AS 5-35A)

REFERENCE

''A REVIEW OF THE TLI GO/NO-GO CRITERIA FOR THE C-PRIME MISSION'', TRW NOTE NO. 68-FMT-714, DATED 26 NOVEMBER 1968.

R	ITEM
	5-35C

CRITERIA FOR TLI NO-GO BASED ON ORBITAL DECISION PARAMETER VIOLATION

COMMENTS

THE TRANSLUNAR INJECTION BURN WILL NOT BE PERFORMED IF EITHER GUIDANCE SYSTEM, LAUNCH VEHICLE OR SPACECRAFT, IS UNACCEPTABLY DEGRADED. DEGRADING PERFORMANCE IN EITHER SYSTEM IS FIRST DETECTED BY VELOCITY COMPONENT DIFFERENCES (RULES 5-35A AND B) WITH INDEPENDENT CONFIRMATION MADE BY ANALYZING SELECTED ORBITAL PARAMATERS. COMPARISON IS MADE BETWEEN THE IU STATE AND BEST GROUND STATE FOR SEMIMAJOR AXIS DIFFERENCE (DELTA A) AND MAXIMUM CROSS RANGE VELOCITY (DELTA W DOT MAX). INPLANE AND OUT-OF-PLANE ERROR WILL RESULT IN SIGNIFICANT DEVIATION OF THESE QUANTITIES. IF THE DIFFERENCES EXCEED THE FOLLOWING AT GET OF 1 HR 45 MIN)STATES PASS) TLI IS NO-GO---

DELTA A GREATER THAN 3.28 NM

DELTA W DOT MAX GREATER THAN 32 FPS

LIMITS ARE BASED ON THE RSS OF 9-SIGMA IU HARDWARE ERROR SOURCES. CARE IS TAKEN TO ALSO INCLUDE 3-SIGMA MSFN TRACKING ACCURACIES AND LAUNCH VEHICLE VENTING UNCERTAINTY.

PARTICIPATION

GUIDANCE OFFICER

FLIGHT DYNAMICS OFFICER

FLIGHT DIRECTOR

FLIGHT CREW

DATA SOURCES

GUIDANCE STRIPCHARTS

GUIDANCE INSERTION/INJECTION DIGITALS, MSK 290

AGC DYNAMICS STATUS DISPLAY

VECTOR COMPARE DISPLAY, MSK 1590

PROCEDURE--- (SAME AS 5-35A)

REFERENCE

''A REVIEW OF THE TLI GO/NO-GO CRITERIA FOR THE C-PRIME MISSION,''TRW NOTE NO. A* FMT-714, DATED 26 NOVEMBER 1968

R	ITEM
	5-36

CRITERIA FOR TLI NO-GO BASED ON ORBITAL DECISION PARAMETER VIOLATION

COMMENTS

THE TRANSLUNAR INJECTION BURN WILL NOT BE PERFORMED IF EITHER GUIDANCE SYSTEM, LAUNCH VEHICLE OR SPACECRAFT, IS UNACCEPTABLY DEGRADED. DEGRADED PERFORMANCE IS FIRST DETECTED BY VELOCITY COMPONENT DIFFERENCES (RULES 5-35A AND B) WITH INDEPENDENT CONFIRMATION MADE BY ANALYZING SELECTED ORBITAL PARAMETERS. COMPARISON IS MADE BETWEEN THE IU STATE AND BEST GROUND VECTOR STATE FOR DOWNRANGE POSITION DIFFERENCE (DELTA RV). THIS QUANTITY WILL INDICATE A SIZABLE DEVIATION FOR INPLANE NAVIGATION ERRORS. AT GET OF 56 MIN (CRO PASS) TLI IS NO-GO IF THE DIFFERENCE VIOLATES THE FOLLOWING--- DELTA RV GREATER THAN 105, 100 FT.

THIS LIMIT IS BASED ON 9-SIGMA IU HARDWARE ERROR SOURCES, INCLUDING A MARGIN FOR 3-SIGMA MSFN TRACKING UNCERTAINTY AND LAUNCH VEHICLE VENTING ERRORS.

PARTICIPATION

GUIDANCE OFFICER

FLIGHT DYNAMICS OFFICER

FLIGHT DIRECTOR

FLIGHT CREW

DATA SOURCES

GUIDANCE STRIPCHARTS

GUIDANCE INSERTION/INJECTION DIGITALS, MSK 290

AGC DYNAMIC STATUS

VECTOR COMPARE DISPLAY, MSK 1590

PROCEDURE--- (SAME AS 5-35A)

REFERENCE

''A REVIEW OF THE TLI GO/NO-GO CRITERIA FOR THE C-PRIME MISSION,'' TRW NOTE NO. 68-FMT-714, DATED 26 NOVEMBER 1968

R	ITEM
	5-37

CRITERIA FOR TLI NO-GO DUE TO CMC NAVIGATION ERRORS BASED ON ORBITAL DECISION PARAMETERS

COMMENT

THE TLI BURN WILL NOT BE PERFORMED IF THE SATURN IU PLATFORM REFERENCE HAS FAILED AND THE CMC NAVIGATION STATE VECTOR AT EOI INDICATES A SLOW DRIFT DEGRADATION OF THE CSM INERTIAL PLATFORM (IMU). A SATISFACTORY IMU IS REQUIRED BY THE CREW FOR CONTINUING THE LUNAR MISSION BEYOND TLI AND IN THE NORMAL CASE (NO IU REFERENCE FAIL) WOULD BE DEEMED ACCEPTABLE UNDER THE CRITERIA OF MISSION RULES 5-35A AND 5-32. HOWEVER, WITH THE IU REFERENCE GONE, THE LAUNCH AND DRIFT COMPARISONS WILL BE INVALID AND ORBITAL PARAMETER CHECKS MUST BE MADE. COMPARISON IS MADE BETWEEN THE CMC STATE AND THE BEST GROUND STATE FOR DIFFERENCES IN SEMI-MAJOR AXIS (DELTA A) AND MAXIMUM CROSSRANGE VELOCITY (DELTA W DOT MAX) COMPARED AT GET = 1 HOUR AND 45 MINUTES AND DOWNRANGE POSITION (DELTA RV) COMPARED AT GET = 56 MINUTES. TLI IS NO-GO IF THE COMPARISON EXCEEDS THE FOLLOWING LIMITS---

1. DELTA RV 535,900 FEET
2. DELTA A 11.6 N.M.
3. DELTA W DOT MAX 78.7 FPS

LIMITS ARE BASED ON AN RSS OF THE FOLLOWING---

1. 9 SIGMA RSS OF ALL G AND N HARDWARE ERRORS EXCEPT FOR PAD INITIAL MISALIGNMENT ERRORS AND ACCELEROMETER BIASES WHICH ARE 3 SIGMA (SINCE THIS CAN BE WELL ESTABLISHED PRE-LIFT-OFF).
2. 3 SIGMA MSFN ACCURACY.
3. A 10-POUND SIVB VENTING UNCERTAINTY.

PARTICIPATION

GUIDANCE OFFICER

FLIGHT DYNAMICS OFFICER

FLIGHT DIRECTOR

FLIGHT CREW

DATA SOURCES

VECTOR COMPARISON DISPLAY MSK 1590

CMC TELEMETRY VECTOR

MSFN BEST ESTIMATE TRAJECTORY VECTOR

GUIDANCE OFFICER STRIPCHARTS

IU REFERENCE FAILURE TELEMETRY DISCRETES

PROCEDURE--- (SAME AS 5-35A)

REFERENCE

A. A REVIEW OF THE TLI GO/NO-GO CRITERIA FOR THE C-PRIME MISSION, TRW NOTE NO. 68-FMT-714, DATED NOVEMBER 26, 1968

B. A REVIEW OF THE TLI GO/NO-GO CRITERIA FOR THE APOLLO F AND G MISSION, TRW NOTE NO. 5524.6-48, DATED APRIL 24, 1969

R	ITEM
	5-46A

CRITERIA FOR CMC OR LGC TEMPORARILY NO-GO FOR MANEUVER CONTROL (SOFTWARE FAILURES)

COMMENTS

THE RELIABILITY OF THE CMC OR LGC AS A DATA SOURCE AND CONTROL DEVICE IS DEPENDENT ON THE INTERNAL FUNCTIONING OF THE SOFTWARE. THE CMC AND LGC ARE PROGRAMMED TO RECOGNIZE INTERNAL FAULTS AND ERRONEOUS CONDITIONS. UPON RECOGNITION OF SUCH A CONDITION, THE COMPUTER ISSUES A PROGRAM ALARM. THE CMC AND LGC ALARMS WHICH INVALIDATE FUNCTIONAL CAPABILITY UNTIL CAUSE IS REMEDIED ARE OUTLINED BELOW. THEY ARE CATAGORIZED BY SINGLE AND MULTIPLE OCCURRENCE.

SINGLE OCCURRENCE

ALARM CODE	ALARM FAULT
00205	BAD PIPA READING (CMC ONLY)
00214	PROGRAM USING IMU WHEN IMU TURNED OFF
00777	A PIPA FAIL CAUSED ISS WARNING
01107	RESTART PHASE TABLE ENTRIES DISAGREE
01407	VG INCREASING
03777	ICDU FAIL CAUSED ISS WARNING
04777	ICDU AND PIPA FAILS CAUSED ISS WARNING
07777	IMU FAIL CAUSED ISS WARNING
10777	IMU AND PIPA FAILS CAUSED ISS WARNING
13777	IMU AND ICDU FAILS CAUSED ISS WARNING
14777	IMU, ICDU, PIPA FAILS CAUSED ISS WARNING

CONTINUOUS OCCURRENCE

20430	INTEGRATION CAUSING OVER-FLOW THAT RECTIFICATION WOULD NOT ELIMINATE
20607	NO SOLUTION FROM CONIC ROUTINE
20610	P37 POSITION VECTOR AT IGNITION TOO SMALL (CMC ONLY)
21103	FORBIDDEN STEP EXECUTED
21204	ZERO OR NEGATIVE WAITLIST CALL
21206	DISPLAY SYSTEM ADDRESS BUFFERS FULL

R	ITEM

21210	JOB ALREADY WAITING IN PARTICULAR STALL ROUTINE
21302	SQUARE ROOT CALLED WITH NEGATIVE ARGUMENT
21501	DISPLAY SYSTEM ALARM FROM INTERNAL USE
21502	ILLEGAL REQUEST FOR A FLASHING DISPLAY (CMC ONLY)
21521	NEW PROGRAM REQUEST CANNOT BE MADE AFTER PII STARTED (CMC ONLY)
31104	TOO MANY JOBS ATTEMPTING TO USE JOB DELAY ROUTINE
31201	EXECUTIVE OVERFLOW-NO VACANT AREAS
31202	EXECUTIVE OVERFLOW-NO JOB REGISTER SETS
31203	NEW TASK CANNOT BE INSERTED SUCCESSFULLY IN WAITLIST SYSTEM
31207	NO VACANT AREA AVAILABLE FOR MARK DATA
31211	OPTICS USE NOT ALLOWED WITH EXTENDED VERB BEING PERFORMED

PARTICIPATION

GUIDANCE OFFICER

FLIGHT CREW

FLIGHT DIRECTOR

DATA SOURCES

CMC DSKY/PROGRAM ALARM LIGHT

CMC MONITOR I H/S, MSK 966

LGC MONITOR H/S, MSK 1594

CCATS CMC OR LGC DOWNLINK READOUT

PROCEDURE

A. INDICATION

CREW OBSERVES PROGRAM ALARM LIGHT AND KEYS V05N09 TO VERIFY ALARM. GDO OBSERVES PROGRAM ALARM VIA FAILREGS USING MSK 966 (CMC), MSK 1594 (LGC), OR CCATS CMC/LGC DOWNLINK READOUT.

B. ACTION

ALARM IS IDENTIFIED AS APPLICABLE TO A GO/NO-GO DECISION. IF IT IS IN ''CONTINUOUS'' CATEGORY DSKY ERROR RESET IS PERFORMED TO VERIFY RE-OCCURRANCE. AFTER IDENTIFICATION GDO DECLARES'' CMC GO ON PROGRAM ALARM'' OR'' CMC NO-GO ON PROGRAM ALARM.''

R	ITEM
	5-46B

CRITERIA FOR CSM G AND N NO-GO BASED ON CMC/IMU ALIGNMENT DISCREPANCY (OPTICS/WINDOW/MARK CHECK)

COMMENTS

FOR THRUSTING MANEUVERS, THE CMC IS REQUIRED TO ESTABLISH THE DESIRED IMU ALIGNMENT AND ORIENT THE SPACECRAFT TO THE DESIRED THRUST DIRECTION. PRIOR TO EACH MANEUVER THE GROUND PROVIDES VISUAL CHECK DATA TO VERIFY THE CSM/IMU ORIENTATION. IF THE VISUAL CHECK EXCEEDS THE SIGHTING UNCERTAINTY, (SEXTANT FOV, 2.2 DEG-- HORIZON DEFINITION, 4 DEG) THE CMC HAS FAILED TO ORIENT THE CSM TO THE REQUIRED THRUST DIRECTION. THIS IMPLIES INHERENT ERRORS WOULD BE CREATED IF THE G AND N IS ALLOWED TO CONTROL THE MANEUVER. THE SIGHTING UNCERTAISTY ACCOUNTS FOR ATTITUDE HOLD DEADBAND, OPTICS POSITIONING, AND ACTUAL HORIZON DEFINITION.

PARTICIPATION

GUIDANCE OFFICER

CAPCOM

FLIGHT CREW

DATA SOURCES

GUIDANCE OPTICS SUPPORT TABLE, MSK 229

PROCEDURE

A. PREPARATION

THE GDO GENERATES THE OPTICS DATA TO BE PASSED BY THE CAPCOM AS PART OF THE MANEUVER PAD.

B. ACTION

AFTER THE LAST PRE-MANEUVER IMU ALIGNMENT, THE FLIGHT CREW MANEUVERS TO THE DETERMINED THRUSTING ATTITUDE. THE VISUAL SIGHTING DATA OBTAINED FROM THE MANEUVER PAD IS VERIFIED. IF THE SIGHTING DATA EXCEEDS THE UNCERTAINTY THE G AND N IS ''NO-GO''. IF MANEUVER IS CRITICAL, CREW CONTINUES PREPARATION FOR SCS EXECUTION-- IF NOT, PREPARATION IS DELAYED UNTIL G AND N ERROR IS RESOLVED.

R	ITEM
	5-46C

CRITERIA FOR LM G AND N NO-GO BASED ON LGC/IMU ALIGNMENT DISCREPANCY (COAS CHECK)

COMMENTS

FOR THRUSTING MANEUVERS, THE LGC IS REQUIRED TO ESTABLISH THE DESIRED IMU ALIGNMENT AND ORIENT THE SPACECRAFT TO THE DESIRED THRUST DIRECTION. PRIOR TO CERTAIN CRITICAL MANEUVERS THE GROUND PROVIDES VISUAL CHECK DATA TO VERIFY THE LM/IMU ORIENTATION. IF THE VISUAL CHECK EXCEEDS THE SIGHTING UNCERTAINTY (COAS COORDINATES, +/- 2 DEG) THE LGC HAS FAILED TO ORIENT THE LM TO THE REQUIRED THRUST DIRECTION. THUS INHERENT ERRORS WOULD BE CREATED IF THE G AND N IS ALLOWED TO CONTROL THE MANEUVER. THE SIGHTING UNCERTAINTY ACCOUNTS FOR ATTITUDE HOLD DEADBAND AND ASSUMES A CALIBRATED COAS.

PARTICIPATION

GUIDANCE OFFICER

CAPCOM

FLIGHT CREW

DATA SOURCES

LM OPTICS SUPPORT TABLE, MSK 239

PROCEDURE

A. PREPARATION

THE GDO GENERATES THE OPTICS DATA TO BE PASSED BY THE CAPCOM AS PART OF THE MANEUVER PAD.

B. ACTION

AFTER THE LAST PRE-MANEUVER IMU ALIGNMENT THE FLIGHT CREW MANEUVERS TO THE DETERMINED THRUSTING ATTITUDE. THE VISUAL SIGHTING DATA FROM THE MANEUVER PAD IS VERIFIED. IF THE SIGHTING DATA EXCEEDS THE UNCERTAINTY, THE G AND N IS ''NO-GO''. IF MANEUVER IS CRITICAL, CREW CONTINUES PREPARATION FOR AGS EXECUTION-- IF NOT, PREPARATION IS DELAYED UNTIL G AND N ERROR IS RESOLVED.

R	ITEM
	5-46D

CRITERIA FOR CMC/LGC NO-GO FOR MANEUVER DETERMINATION AND/OR MONITORING (STATE VECTOR ERROR)

COMMENTS

THERE ARE IN-FLIGHT SITUATIONS WHERE STATE VECTORS ARE UPLINKED TO CMC/LGC WITHOUT SUFFICIENT SUBSEQUENT GROUND STATION COVERAGE TO VERIFY PROPER ONBOARD ACCEPTANCE VIA TELEMETRY. IN SUCH INSTANCES DATA IN THE FORM OF A GET, LATITUDE, LONGITUDE, AND ALTITUDE VALID AT THE GET ARE PROVIDED. THIS GET IS INPUT INTO CMC/LGC AND THE STATE VECTOR IS INTEGRATED TO THIS TIME. THIS A CHECK ON THE ONBOARD COMPUTER PROPER ACCEPTANCE OF A GROUND UPLINKED NAV VECTOR AND ITS ABILITY TO INTEGRATE PROPERLY. DATA PRIORITY HAS SET THE ALLOWABLE DIFFERENCES IN LATITUDE AND LONGITUDE AT +/- 0.02 DEG AND +/- 0.2 N.M. IN ALTITUDE.

PARTICIPATION

GUIDANCE OFFICER

FLIGHT DYNAMICS OFFICER

CAPCOM

FLIGHT CREW

DATA SOURCES

CHECKOUT MONITOR DISPLAY, MSK 1619 APPLICABLE NAVIGATION UPDATE DISPLAY, MSK 276 OR MSK 279

PROCEDURE

ACTION

GDO GENERATES THE APPLICABLE NAVIGATION UPDATE AND PROVIDES FDO WITH THE UPDATE TIMETAG. FDO ADJUST THE TIMETAG BY A GIVEN INCREMENT AND GENERATES LATITUDE, LONGITUDE, AND ALTITUDE ON CHECKOUT MONITOR FOR THE ADJUSTED TIME. THIS INFORMATION IS VOICED TO FLIGHT CREW BY CAPCOM. CREW TAKES APPROPRIATE ACTION TO VERIFY ONBOARD INTEGRATION TO THE SPECIFIED POINT IN TIME.

R	ITEM	
	5-47	SPACECRAFT TIMING

COMMENTS

A THROUGH F.

TIMING ERRORS LESS THAN 2 SECONDS DURING THESE PHASES DO NOT ADVERSELY AFFECT THE MANEUVER AND/OR THE MONITORING OF THE MANEUVER. ERRORS IN EXCESS OF 2 SECONDS ARE READILY DETECTED AND EASILY CORRECTED WHEN THE CMC AND LGC ARE OPERATING NORMALLY.

G AND H.

IN ORDER TO USE THE DOWNLINK VECTORS (LGC AND AGS) FOR COMPARISON WITH MSFN TO DETERMINE GUIDANCE SWITCHOVER THE TIMING OF THE COMPUTERS MUST BE WITHIN .3 SECONDS OF MSFN.

I AND J.

THE ACTIVE VEHICLE COMPUTER TIMING MUST BE ACCURATE TO .5 SECONDS TO ACCOMPLISH RENDEZVOUS AND SEXTANT TRACKING.

NOTE

THE ABOVE ARE LIMITS ON TIMING ERRORS AND UNDER NORMAL CONDITIONS, THE CLOCKS WILL BE MAINTAINED AS ACCURATELY AS POSSIBLE.

R	ITEM	
	5-57	MCC EXECUTION CRITERIA

COMMENTS

A. THE FLIGHT OPERATIONS DIRECTOR HAS REQUESTED THAT, IF POSSIBLE, ALL SPS MCC'S SHOULD BE GREATER THAN 3 SECS.

B. MCC2 AND MCC4 ARE SELECTED AS THE PREFERRED MCC EXECUTION POINTS FOR THE FOLLOWING REASONS---

1. EPHEMERIS IS BETTER KNOWN AT MCC2 THAN AT MCC1, AND AT MCC4 THAN AT MCC3.

2. THE NOMINAL DELTA V GROWTH RATE BETWEEN MCC1 AND MCC2 IS SMALL.

3. AT MCC4, THE TRAJECTORY IS LESS SENSITIVE TO SMALL DISPERSIONS THAN AT MCC3.

C. MCC2 IS PREFERRED OVER MCC1, IF THE COST IS NOT PROHIBITIVE FOR THE FOLLOWING REASONS---

1. THE KNOWLEDGE OF THE STATE VECTOR IS BETTER AT MCC2. (SAME AS B-1 ABOVE.)

2. A MINOR DISPERSION AT MCC2 WILL NOT BE PROPAGATED AS LONG AS WOULD BE THE SAME DISPERSION.

D. TO AVOID THE UNDESIRABLE REGION 3 SECS OR LESS SPS BURNS AND TO AVOID EXECUTING MCC3, A NON-FREE MCC2 WILL BE EXECUTED PROVIDING A SAFE ABORT CAPABILITY AT LOI+2 HRS REMAINS.

E. MCC2 WAS SELECTED AS THE NOMINAL POINT TO GO NON-FREE RETURN ON A HYBRID MISSION FOR THE FOLLOWING REASONS---

1. THE KNOWLEDGE OF THE EPHEMERIS IS BETTER THAN AT MCC1.

2. NOMINALLY THE DELTA V GROWTH RATE IS SMALL BETWEEN MCC1 AND MCC2.

R	ITEM
	5-59

LOI TARGETING CONSTRAINTS

COMMENTS

THE CONSTRAINTS SPECIFIED IN THIS RULE ARE FOR USE IN BOTH THE TARGETING OF LOI AND THE EVALUATION OF THE FOURTH SCHEDULED MIDCOURSE. THE BASIC PHILOSOPHY IS THAT IF LOI CAN BE TARGETED WITHIN THESE CONSTRAINTS THE MIDCOURSE CORRECTION WILL NOT BE REQUIRED. THE TWO MAJOR CONSIDERATIONS USED WHEN EVALUATING AN LOI MANEUVER ARE THE COMPATIBILITY OF THE MANEUVER WITH ESTABLISHED MONITORING TECHNIQUES AND THE TOTAL DELTA V REQUIRED FOR THE LOI/DOI MANEUVER COMBINATION.

THE SPECIFIC CONSTRAINTS AND THEIR RATIONALE ARE AS FOLLOWS---

(1) THE PERICYNTHIAN OF THE APPROACH HYPERBOLA IS CONSTRAINED TO BE WITHIN +/- 10 N.M. OF THE TARGETED PERICYNTHIAN. THIS ALTITUDE IS ESTABLISHED EITHER BY TLI OR BY THE FIRST EXECUTED MIDCOURSE CORRECTION. ALTHOUGH THE LIMITS ARE SOMEWHAT ARBITRARY (I.E., VIOLATION DOES NOT NECESSARILY PRESENT A CREW HAZARD), THEY DO REPRESENT A REASONABLE TOLERANCE AROUND TARGET. MORE SIGNIFICANT DEVIATIONS CAN LEAD TO UNDESIRABLY LOW PERICYNTHIANS OR NECESSITATE LARGE APSIDAL ROTATIONS DURING LOI TO ESTABLISH ACCEPTABLE ORBITAL CONDITIONS FOR THE DOI MANEUVER. IN ANY CASE, MCC4 SHOULD NOT BE REQUIRED FOR PERICYNTHIAN ALTITUDE ADJUSTMENT UNLESS PREVIOUS CONDITIONS REPRESENTED GREATER THAN 3 SIGMA DISPERSIONS.

2. THE ALTITUDE OF THE NODE IS CONSTRAINED TO BE BETWEEN -10 AND +15 N.M. OF THE TARGETED PERICYNTHIAN ALTITUDE. THE LOWER LIMIT IS DETERMINED BY 1 ABOVE WHILE THE UPPER BOUNDARY CONSTRAINS THE APSIDAL ROTATION POSSIBLE DURING LOI. THUS MAINTAINING THE ABORT MODES IN A NEAR-NOMINAL TIME FRAME. THIS BECOMES ESPECIALLY IMPORTANT ON HYBRID TRAJECTORIES WHERE THE GAP BETWEEN MODES I AND II MUST BE WELL DEFINED IN ORDER FOR SPECIAL CREW PROCEDURES TO BE IMPLEMENTED ACCORDINGLY. LARGE APSIDAL ROTATIONS COULD WIDEN THIS GAP, WITH THE POSSIBILITY OF RENDERING REHEARSED ABORT TECHNIQUES INADEQUATE.

R	ITEM
	5-60

LOI COMMITMENT CRITERIA

COMMENTS

IN ORDER FOR LOI TO BE GO, SEVERAL MAJOR MILESTONES MUST BE MET (FROM A TRAJECTORY/MANEUVER STANDPOINT). THESE INCLUDE---

A. COMMITMENT TO 4 HOURS (AT LEAST) IN LPO. THIS REQUIREMENT MUST BE MET TO INSURE ADEQUATE POST LOI TRACKING FOR A VALID TEI SOLUTION. THIS ALLOWS A FULL UNPERTURBED REV OF TRACKING ON WHICH TO COMPUTE TEI. PRESENTLY, ONE REV OF TRACK IS THE MINIMUM ACCEPTABLE AMOUNT UPON WHICH TO BASE MANEUVER COMPUTATIONS.

B. THERE SHOULD BE ENOUGH SPS FUEL FOR LOI TEI PLUS TEC MCC AND RESERVES IN ORDER TO COMMIT TO LOI-- HOWEVER, CONSIDERATION WILL BE GIVEN TO USING THE DPS FOR LOI WHEN TRANSLUNAR MIDCOURSE REQUIREMENTS PRECLUDE USING THE SPS FOR LOI AND TEI. THE BASIC PREMISE IS THAT EVEN WITHOUT A LUNAR LANDING THERE IS STILL ENOUGH TO BE GAINED IN LUNAR ORBIT TO WARRANT CONTINUING WITH LOI.

PARTICIPATION

FDO

RETRO

FD

G AND C

DATA SOURCES

LOI PLANNING/GPM

RTE DIGITALS

MPT

PROCEDURES

NOMINAL MISSION PROCEDURE

A. LOI WILL BE TARGETED BY FDO TO INSURE EXECUTION WITHIN CONSTRAINTS.

B. THE MANEUVER WILL BE TRANSFERRED TO THE MPT SO THAT RETRO CAN COMPUTE A RTE SOLUTION.

C. THE DELTA V REQUIRED FOR THESE MANEUVERS (PLUS TEC MCC AND RESERVES) MUST BE COMPARED AGAINST THE DELTA V REM AS SUPPLIED FROM G AND C.

D. FOR SITUATIONS WHERE THE TIMELINE HAS BECOME CROWDED EOMFR MAY BE GOTTEN FROM MCC TRADEOFF DISPLAY, THUS ELIMINATING RETRO TEI CALCULATIONS, ETC., FROM THE WORK SCHEDULE.

REFERENCE

APOLLO TECHNIQUES DOCUMENT, S-PA 9 TO 41, MISSION F/G TL MCC AND LOI, FEBRUARY 24, 1969.

R	ITEM
	5-61

PREMATURE LOI SHUTDOWN

COMMENTS

A. SPS SHUTDOWN BUT WITHIN SPS OPERATING LIMITS.

WHEN POSSIBLE, IT IS DESIRABLE TO ACHIEVE A STABLE LUNAR ORBIT. IF THE SPS SHUTSDOWN PREMATURELY DUE TO A GUIDANCE OR CONTROL PROBLEM BUT IS STILL OPERABLE, A MANUAL RESTART SHOULD BE ATTEMPTED TO OBTAIN A STABLE LUNAR ORBIT.

PARTICIPATION

CREW

DATA SOURCES

ONBOARD MONITORING

PROCEDURE

CREW WILL USE STANDARD SPS RESTART PROCEDURES.

REFERENCE

MISSION ABORT PLAN.

COMMENTS

B. SPS SHUTDOWN AND OUT OF SPS OPERATING LIMITS.

1. WITH THE SPS OUT OF LIMITS, A LOI ABORT MUST BE PERFORMED. THE LOI ABORT CAN BE DIVIDED INTO THREE BASIC REGIONS WITH THREE BASIC PROCEDURES.

(A) THE FIRST REGION CALLED MODE I HAS A POST-ABORT TRAJECTORY RESULTING IN A DIRECT RETURN TO EARTH. THE DELTA V REQUIRED FOR A MODE I INCREASES AS LOI PROGRESSES THROUGH THE ABORT REGION.

(B) THE SECOND REGION, OR MODE II, IS A TWO-IMPULSE ABORT IN WHICH THE FIRST IMPULSE RESULTS IN A STABLE LUNAR ORBIT (CLEAR PERICYNTHIAN WITH A PERIOD LESS THAN ABOUT 40 HRS). THE SECOND IMPULSE IS BASICALLY A TEI PERFORMED NEAR PERICYNTHIAN. THE DELTA V REQUIRED FOR A MODE II ABORT DECREASES AS LOI PROGRESSES THROUGH THE ABORT REGION.

(C) THE THIRD REGION, OR MODE III, HAS A PRE-ABORT TRAJECTORY THAT IS A STABLE LUNAR ORBIT AND IS BASICALLY A TEI MANEUVER. THE DELTA V REQUIRED FOR A MODE III ABORT INCREASES AS LOI PROGRESSES THROUGH THE ABORT REGION.

2. IDEALLY, THE LM DPS DELTA V CAPABILITY EXCEEDS THAT REQUIRED TO ABORT. HOWEVER, SOME AREAS OF THE MODE I ABORT REGION REQUIRE MORE DELTA V THAN IS AVAILABLE IN THE DPS, ABORTS FROM THESE AREAS REQUIRE AN ADDITIONAL BURN FROM THE LM APS.

(A) FOR MODE I ABORTS, THE MODE I ABORT REGION IS SUBDIVIDED INTO THREE DIFFERENT AREAS WHICH ARE DEFINED AS A FUNCTION OF THE LOI DELTA VM (MAGNITUDE) EXISTING AT SPS CUT OFF. DEPENDING ON THE VALUE OF DELTA VM THREE DIFFERENT TYPES OF ABORT MANEUVERS ARE PERFORMED

(1) IN THE AREA DEFINED BY DELTA VM OF 0 TO 238 FPS (APPROXIMATELY 0 TO 33 SEC) A DPS BURN WILL BE PERFORMED AT LOI IGN + 2 HR. THIS MANEUVER WILL BE COMPUTED ON THE GROUND. LOI IGN + 2 HR. WAS CHOSEN FROM IGNITION TIME OF THIS DPS BURN BECAUSE THE LM CAN BE PREPARED FOR A G+N BURN BY THE CREW IN THAT TIME SPAN. THEREFORE BASED ON THIS IGNITION TIME THE THE DELTA VM OF 238 FPS INTO THE LOI BURN REPRESENTS THE POINT AT WHICH ALL THE DELTA V CAPABILITY IN THE LM DPS IS UTILIZED IN THE ABORT BURN. TO DELAY THE IGNITION SIGNIFICANTLY WOULD INCREASE THE REQUIRED ABORT DELTA V BEYOND THAT AVAILABLE IN THE DPS.

R	ITEM
	5-61 CONT'D

(2) IN THE AREA DEFINED BY DELTA VM OF 238 TO 545 FPS (APPROXIMATELY 33 TO TO 1+15 A DPS BURN WILL BE PERFORMED AT LOI IGN + 30 MIN. THIS MANEUVER IS BASED ON A CREW CHART OF ABORT DELTA V VERSUS DELTA V GAINED AND A SET OF PRE-LOI ESTABLISHED FDAI ATTITUDES. LOI IGN + 30 MIN. WAS CHOSEN FOR IGNITION OF THIS DPS BUT BECAUSE THE LM CAN BE PREPARED BY THE CREW IN THAT TIME SPAN. THEREFORE BASED ON THIS IGNITION TIME THE SPREAD BETWEEN DELTA VM INTO THE LOI BURN REPRESENTS THE ENTIRE DELTA V CAPABILITY OF THE DPS. TO DELAY THIS IGNITION SIGNIFICANTLY WOULD INCREASE THE REQUIRED ABORT DELTA V BEYOND THAT AVAILABLE IN THE DPS.

(3) IN THE AREA DEFINED BY DELTA VM OF 545 TO 725 FPS (APPROXIMATELY 1+15 TO 1+30) A DPS BURN TO DEPLETION WILL BE PERFORMED AT LOI IGN + 30 MIN FOLLOWED BY A SUPPLEMENTAL APS BURN AT DPS IGN + 2 HR. THE DPS MANEUVER AT LOI IGN + 30 MIN IS BASED ON A CREW CHART OF ABORT DELTA V VERSUS DELTA V GAINED AND A SET OF PRE-LOI ESTABLISHED FDAI ATTITUDES. THE APS SUPPLEMENTAL BURN IS COMPUTED BY THE GROUND BASED ON POST-DPS BURN TRACKING.LOI IGN + 30 MIN WAS CHOSEN FOR IGNITION OF THE DPS ABORT BURN BECAUSE THE LM CAN BE PREPARED BY THE CREW, AND THE DELTA V AVAILABLE FROM THE APS CAN SUPPLEMENT THE DPS TO ACHIEVE THE REQUIRED DELTA V. TO DELAY THE IGNITION SIGNIFICANTLY WOULD INCREASE THE REQUIRED ABORT DELTA V BEYOND THAT AVAILABLE.

(B) FOR MODE II ABORTS, A DPS BURN IS REQUIRED AT LOI IGN + 2 HRS WITH A SECOND IMPULSE OCCURING NEAR PERICYNTHIAN (EXACT TIME IS A FUNCTION OF THE ORBITAL PERIOD AND ORIENTATION). IF THE REQUIRED SECOND IMPULSE IS BEYOND THE REMAINING DPS CAPABILITY, THE ADDITIONAL DELTA V SHOULD BE APPLIED AS SOON AS POSSIBLE AFTER DPS DEPLETION IN ORDER TO REDUCE THE DELTA V COAST. THE MODE II MANEUVERS ARE COMPUTED ON THE GROUND. THE ABORT MODE CHANGEOVER FROM MODE I TO MODE II OCCURS WHEN THE REQUIRED ABORT DELTA V'S FOR BOTH MODES ARE THE SAME.

(C) FOR MODE III ABORTS, THE DPS ALONE CAN PERFORM THE TEI. THE MODE III REGION IS ENTERED WHEN THE PRE-ABORT TRAJECTORY HAS A CLEAR PERICYNTHIAN AND A PERIOD OF LESS THAN ABOUT 15 HRS. ALL MODE III MANEUVERS ARE COMPUTED ON THE GROUND.

3. FOR A SHUT DOWN OF THE SPS ENGINE AT ANY POINT DURING THE LOI BURN, THE OPS OR DPS+APS ENGINE(S) HAVE THE CAPABILITY TO PROVIDE THE NECESSARY DELTA V FOR THE APPROPRIATE ABORT MANEUVER SEQUENCE. THE SPS CONTROL LIMITS HAVE BEEN APPLIED TO VARIOUS ABORT MODE REGIONS OF THE LOI BURN TO, AS FAR AS POSSIBLE, PRECLUDE A SHUTDOWN IN OTHER AREAS OF THE MODE I REGION. IN THE FIRST AREA OF THE MODE I REGION (DELTA VM FROM 0 TO 238, 0 TO 33 SEC) THE TIGHT LIMITS APPLY. IF THE ENGINE IS GOING TO DEGRADE THE TIGHT LIMIT WILL INCREASE THE PROBABILITY OF SHUT DOWN IN THIS AREA. A SHUTDOWN HERE RESULTS IN A LOI TIG + 2 HR. DPS ABORT BURN TARGETED BY THE GROUND WHICH IS MORE ACCEPTABLE THAN AN ABORT OFF THE CREW CHART AT LOI TIG + 30 MIN. WHEN DELTA VM=238, ABORT 33 SEC INTO THE LOI BURN, THE LOOSE CONTROL LIMITS BECOME EFFECTIVE AND ARE IN EFFECT UNTIL DELTA VM=1512, ABOUT 3+20 INTO THE BURN. THIS ENCOMPASSES THE REMAINDER OF THE MODE I REGION, ALL THE MODE II, AND THAT PORTION OF THE MODE III WHERE THE ORBITAL PERIOD IS ABOUT 7 HRS. THE RELAXATION OF THE LIMITS TO ALLOW OPERATION OF THE SPS IN A MORE DEGRADED CONDITION INCREASES THE PROBABILITY OF GETTING BEYOND THE REGION WHERE AN ABORT OFF THE CREW CHART IS REQUIRED, OR A DPS+APS BURN IS REQUIRED.THE LIMITS ARE KEPT LOOSE ACROSS THE MODE II AND FIRST PART OF THE MODE III REGION IN ORDER TO ATTAIN A REASONABLE LUNAR ORBITAL PERIOD (GREATER THAN OR EQUAL TO 7 HRS) SINCE VIOLATION OF THE TIGHT SPS CONTROL LIMITS PRECLUDES A LUNAR LANDING ANYWAY. OPERATION OF THE SPS BELOW THESE LIMITS HAS LITTLE TO GAIN AND THE DELTA V REQUIRED FOR TEI INCREASES THROUGHOUT MODE III. THE LIMITS BECOME TIGHT AGAIN THROUGHOUT THE REMAINDER OF THE LOI BURN. IF THE ENGINE IS OPERATING UNDER TIGHT LIMITS AT THIS TIME IN ALL PROBABILITY IT WILL CONTINUE TO DO SO SINCE IT HAS BEEN BURNING FOR 3+20.IF FORCED TO SHUT DOWN IN THIS REGION THERE IS MORE THAN SUFFICIENT DPS DELTA V TO DO TEI WITH. THERE IS ALSO THE APS FOR A BACKUP TO THE DPS, ALSO THE TIGHT LIMITS PERMIT AN SPS RESTART SO THAT IT COULD SERVE AS A FURTHER BACKUP TO THE DPS AND APS ENGINES.

R	ITEM
	5-61 CONT'D

PARTICIPATION

CREW

RFO FDO

DATA SOURCE

ONBOARD MONITORING

RETURN TO EARTH DISPLAYS

GENERAL PURPOSE MANEUVER TABLE

PROCEDURES---

A. MODE I

1. DELTA VM 0-238 FPS (0-33 SEC)

A. TERMINATE LOI ON SPS TIGHT CONTROL LIMITS

B. EXECUTE DPS BURN AT LOI IGN+2 HR USING GROUND COMPUTER

2. DELTA VM 238-594 FPS (33 SEC-1-15)

A. TERMINATE LOI ON SPS LOOSE CONTROL LIMIT

B. EXECUTE DPS BURN AT LOI IGN+30 MIN USING DATA FROM THE CREW CHART

3. DELTA VM 545-725 FPS (1+15-1+39)

A. TERMINATE LOI ON SPS LOOSE CONTROL LIMITS.

B. EXECUTE DPS BURN TO DEPLETION AT LOI IGN + 30 MIN (USING CREW CHART) AND A SUPPLEMENTAL APS BURN AT LOI IGN + 2 1/2 HRS USING GROUND COMPUTER.

B. MODE II.

1. TERMINATE LOI ONLY FOR VIOLATION OF SPS LOOSE LIMITS (SPS UNSAFE).

2. EXECUTE DPS BURN AT LOI IGN + 2 HRS (GROUND COMPUTED).

3. EXECUTE DPS TEI (GROUND COMPUTED) NEAR PERICYNTHIAN. SUPPLEMENT WITH APS IF REQUIRED.

C. MODE III.

1. TERMINATE SPS ON TIGHT OPERATING LIMITS WHEN PERIOD IS LESS THAN 7 HRS (CREW CHART).

2. EXECUTE DPS TEI NEAR PERICYNTHIAN (GROUND COMPUTED)

D. THESE PROCEDURES MINIMIZE THE NEED FOR TWO-IMPULSE ABORT BURNS BY TERMINATING LOI (TIGHT LIMITS) IN THE EARLY PART OF MODE I AND WELL INTO MODE III. ALSO ALLOW THE SPS TO BURN (LOOSE LIMITS) IN THE REST OF MODE I, MODE II AND THE EARLY PART OF MODE III.

R	ITEM
	5-62

SPS FAILURES

COMMENTS

DATA PRIORITY HAS ESTABLISHED THE FOLLOWING GUIDELINES FOR SPS FAILURES AT IGNITION---

A. IF THE SPS FAILS AT IGNITION FOR A MCC, THE GROUND WILL PASS A FLYBY MANEUVER FOR EXECUTION WITH THE DPS OR THE SM-RCS.

B. IF THE SPS FAILS AT IGNITION FOR LOI, THE CREW WILL EXECUTE THE MCC5 ABORT MANEUVER ALREADY ONBOARD WITH DPS OR SM-RCS AT PC +2 HOURS.

C. IF THE SPS FAILS AT IGNITION OF DOI, THE GROUND WILL PASS A DPS TEI AS SOON AS PRACTICAL (EARLIEST WOULD BE 4-1/2 HOURS AFTER LOI).

PARTICIPATION

FLIGHT CREW

CAPCOM

FD

FDO

RETRO

DATA SOURCES

MCC TRADEOFF

RTE DIGITALS

PROCEDURES

THE MISSION TECHNIQUES FOR THIS PARTICULAR FAILURE WOULD BE AS FOLLOWS---

A. FOR SPS FAILURES AT MCC

1. FDO WOULD TARGET A FLYBY MCC WHICH WOULD BE CONSISTENT WITH THE DESIRED RETURN TIME AND LANDING AREA (AS SPECIFIED BY THE RETRO) AS WELL AS SATISFYING THE FLYBY ALTITUDE CONSTRAINTS (60 LESS THAN HP LESS THAN 1500).

2. RETRO WOULD COMPUTE A TE MCC TO INSURE ALL CONSTRAINTS HAVE BEEN MET (FLIGHT TIME, LANDING AREA, ETC.)

B. FOR SPS FAILURES AT LOI

1. CREW WILL EXECUTE THE PC +2 MANEUVER ALREADY ONBOARD UNLESS CONDITIONS DICTATE ANOTHER MANEUVER.

2. RETRO COULD CALCULATE A MANEUVER AT A LATER TIME, TO A DIFFERENT LANDING AREA OR FOR A DIFFERENT RETURN TIME DEPENDING ON LM PREPARATION TIME, DPS DELTA V AVAILABLE, AND TIME CRITICALITY OF THE SITUATION.

C. FOR SPS FAILURES AT DOI

1. RETRO WILL COMPUTE A DPS TEI FOR EXECUTION AS SOON AS PRACTICAL. THE NOMINAL TIME FOR THIS MANEUVER WOULD BE DOI + 4-1/2 HOURS.

2. IF IT IS DECIDED TO REMAIN IN LPO LONGER THAN SPECIFIED TIME (ABOVE), RETRO WILL COMPUTE THE DPS TEI CONSISTENT WITH THE MISSION PLAN.

REFERENCES

APOLLO TECHNIQUES DOCUMENT, S-PA-9T043, MISSION F/G CONTINGENCY PROCEDURES, FEBRUARY 12, 1969.

R	ITEM	
	5-76	DOI TARGETING

1. DURING TLC, LOI AND DOI ARE TARGETED TO PRODUCE A GROUNDTRACK THAT IS OPTIMUM FOR PHOTOGRAPHING SPECIFIC LANDMARKS AND TO PRODUCE THE FOLLOWING CONDITIONS AT PDI---

   A. 50,000 FT. HP.

   B. DESIRED AZIMUTH

   C. ZERO OUT-OF-PLANE ERROR (WEDGE ANGLE)

2. IF A DISPERSION OCCURS DURING LOI, DOI WILL BE TARGETED WITH THE FOLLOWING ORDER OF PRIORITY---

   A. PRODUCE A 50,000 FT HP AT PDI KEEP THE WEDGE ANGLE ZERO BUT VARY THE DESIRED AZIMUTH +/- 10 DEG IN ORDER TO ACHIEVE A DESIRED PHOTOGRAPHIC GROUNDTRACK. (DESIRED IS DEFINED AS WEDGE ANGLE AT THE PHOTO SITE LESS THAN .25 DEG.)

   B. PRODUCE A 50,000 FT HP AT PDI VARY THE AZIMUTH +/- 10 DEG AND THE WEDGE ANGLE AT PDI UP TO .5 DEG IN ORDER TO ACHIEVE AN ACCEPTABLE PHOTOGRAPHIC GROUNDTRACK.(ACCEPTABLE IS DEFINED AS WEDGE ANGLE AT THE PHOTO SITE LESS THAN .5 DEG.)

   C. IF AN ACCEPTABLE PHOTOGRAPHIC GROUNDTRACK CAN NOT BE FOUND BY APPLYING 2B, THEN ALL PHOTO CONSTRAINTS ON THE GROUNDTRACK ARE DROPPED. DOI WILL THEN BE TRAGETED TO ACHIEVE A 50,000 FT HP AT PDI, WITH ZERO WEDGE ANGLE AT PDI AND NO CONSTRAINTS ON THE AZIMUTH (SEE MISSION RULE 5-81 FOR FURTHER INFORMATION)

R	ITEM
	5-77

DOI COMMITMENT CRITERION

COMMENTS

BY GENERAL AGREEMENT, A GO FOR DOI WILL NECESSITATE AT LEAST TWO REVOLUTIONS IN THE POST-MANEUVER ORBIT. THE PURPOSE FOR THE RULE IS TO PROVIDE ONE FULL REV OF TRACKING TO OBTAIN A POSTBURN VECTOR WITH WHICH TO COMPUTE TEI. THIS MANEUVER COULD THEN BE PASSED ON THE NEXT FRONT SIDE PASS.

PARTICIPATION

FDO

RETRO

FD

DATA SOURCES

LM DESCENT PLANNING DISPLAY

RETURN TO EARTH DIGITALS

PROCEDURES

THE NOMINAL MISSION TECHNIQUES WOULD BE---

A. FDO WILL COMPUTE DOI IN OBSERVANCE WITH MISSION RULE 5-76.

B. FDO WILL TRANSFER THE MANEUVER TO THE MPT.

C. RETRO WILL COMPUTE A TEI MANEUVER TO INSURE RETURN CAPABILITY. THIS MANEUVER WOULD NOT BE PASSED.

REFERENCES

APOLLO TECHNIQUES DOCUMENT, S-PA-9 TO 41, MISSION F/G TL MCC AND LOI, FEBRUARY 17, 1969.

R | ITEM

5-78 BAIL OUT MANEUVER RECOMMENDATION

FOLLOWING DOI, FDO WILL EVALUATE THE GNCS, EMS, MSFN DOPPLER RESIDUALS, AND MSFN SHORT ARC AND RECOMMEND A STAY/NO STAY DECISION. A STAY RECOMMENDATION REQUIRES THAT THE POST-DOI TRAJECTORY HAVE AT LEAST A 1 N.M. CLEARANCE ABOVE THE HIGHEST PEAK ON THE GROUNDTRACK. THE HIGHEST PEAK IS 2.9 N.M. ABOVE THE RADIUS LLS AND OCCURS AT 7.6 DEG E. TO ACHIEVE AT LEAST A 1 N.M. CLEARANCE ABOVE THIS PEAK, A HP=3.8 N.M. MUST BE CONFIRMED. THE FOLLOWING CHART WILL BE UTILIZED FOR THE STAY/NO STAY RECOMMENDATION---

	1		2	3		4	5	6	7		8
GNCS	S		S	S		S	S	X	X		X
EMS	S/NS/X		S/NS/X	S/NS/X		S/X	NS	S	S		S
MSFN DOPPER RESIDUALS	NS + PILOT RPT OF ATT.DEV		NS	S		X	X	X	S		NS
MSFN SHORT ARC	S	NS/X	S/NS/X	NS	S/X	X	X	X	S/X	NS	S/NS/X
ACTION	S	NS	NS	NS	S	S	NS	NS	S	NS	NS
	A	B		A	B				A	B	

NOTES---

S= STAY

NS= NO STAY

X= NOT AVAILABLE/INVALID

PILOT REPORT OF PITCH ATTITUDE DEVIATION DOWN WEIGHTS THE DOPPLER VOTE DUE TO RADIAL VELOCITY ERRORS AT DOI WHICH DOPPLER CANNOT DIFFERENTIATE FROM HORIZONTAL ERRORS (PITCH ATTITUDE DEVIATION ONLY)

R	ITEM
	5-81

LPO PLANE AND ALTITUDE CONSTRAINTS

COMMENTS

THE PLANAR ORIENTATION OF THE LPO GOING INTO POWERED DESCENT WILL BE ESTABLISHED BY THE TARGETING ORBIT DETERMINATION AND EXECUTION OF THE TLC MCC'S AND LOI. DOI EXPECTED ERRORS AFTER THE LOI SEQUENCE ARE PREDICTED TO BE WITHIN 0.5 DEG OUT-OF-PLANE AND 2 DEGREES IN AZIMUTH. CREW TRAINING AND ONBOARD DATA (MAPS, ETC.) WILL BE BASED ON THESE EXPECTED ERRORS.

THE DOI MANEUVER WILL BE TARGETED TO ACHIEVE A PERICYNTHIAN OF 50,000 FT AT PDI. THE PREDICTED HEIGHT OF PERICYNTHIAN AT PDI WILL BE MONITORED TO ASSURE THAT AT PDI IT WILL BE BETWEEN 30,000 AND 70,000 FT. IF A CORRECTION IS REQUIRED, IT WILL BE MADE PRIOR TO LM ACTIVATION IMMEDIATELY AFTER CREW WAKEUP. THE CRITERIA FOR AN ALTITUDE CORRECTION WILL BE BIASED USING PREMISSION OR REAL-TIME COMPUTED ALTITUDE UNCERTAINTY AND PROPAGATION BIASES. THE ANTICIPATED LIMITS ARE 33,000 AND 67,000 FT. IF A CORRECTION IS REQUIRED, PERICYNTHIAN WOULD BE RAISED TO 35,000 FT FOR LOW VIOLATION OR LOWERED TO 50,000 FT FOR HIGH VIOLATIONS.

AN IMMEDIATE CORRECTIVE MANEUVER WILL BE SCHEDULED FOR CASES IN WHICH THE CURRENT PERICYNTHIAN DROPS BELOW 30,000 FT. THIS NUMBER IS CONSIDERED TO BE THE LOWER BOUNDARY FOR GUARANTEED CREW SAFETY. THE ADJUSTMENT TO PERICYNTHIAN WOULD BE TARGETED TO INSURE THAT AN ADDITIONAL ALTITUDE CORRECTION PRIOR TO PDI WOULD NOT BE NECESSARY. THE TARGET PERICYNTHIAN WOULD BE BIASED USING WORST CASE PROPAGATION AND ALTITUDE UNCERTAINTIES.

TO MAINTAIN THE APPROACH OVER FAMILIAR TERRAIN, AND ACCEPTABLE PERICYNTHIAN CONDITIONS, ADDITIONAL MANEUVERS WILL BE SCHEDULED IF NEEDED TO CORRECT DISPERSIONS PRIOR TO UNDOCKING.

PARTICIPATION

FDO

FD

CREW

DATA SOURCES

LM DESCENT PLANNING

FDO ORBIT DIGITALS

CHECKOUT MONITOR

PROCEDURE

FDO WILL USE OPTIONS OF THE LDP DISPLAY TO CORRECT PLANAR DISPERSIONS DETECTED PRIOR TO UNDOCKING.

REFERENCE

OPERATIONAL OPINION

R	ITEM

5-82 NOUN 69 CORRECTION LIMITS

COMMENTS

TO CORRECT FOR ANY DOWNRANGE POSITION ERROR AT PDI, THE GROUND COMPUTES THE ERROR IN THE ONBOARD STATE VECTOR AND UPLINKS THE DOWNRANGE COMPONENT AS A CHANGE TO THE POSTION OF THE LANDING SITE. THIS CORRECTION IS BOUNDED IN MAGNITUDE AS FOLLOWS---

A. A MINIMUM CORRECTION OF 1000 FT IS USED. THIS LIMIT IS DERIVED FROM THE ACCURACY OF THE TECHNIQUES USED IN COMPUTING THE DOWNRANGE ERROR. UNDER SOME CIRCUMSTANCES, EXTREMELY SMOOTH DATA, CONSIDERATION WILL BE GIVEN TO USING SMALLER CORRECTIONS.

B. AN UPPER LIMIT OF 35,000 FT IS USED. THIS NUMBER IS DERIVED FROM THE RADIAL ABORT LIMIT OF 35 FPS. THIS IS BECAUSE THE N69 CORRECTION DOES NOT CORRECT ANY ERRORS IN THE STATE VECTOR, BUT ONLY ALLOWS A BAD STATE VECTOR TO LAND AT THE RIGHT PLACE. A 35,000 FT ERROR TRANSLATES INTO A 35 FPS RADIAL ERROR. ANY GREATER CORRECTION WOULD BE CAUSE FOR ABORT.

PARTICIPATION

FDO

DATA SELECT

CREW

PROCEDURE

THE DATA SELECT COMPUTES THE N69 CORRECTION USING DOPPLER RESIDUALS AND THE LEAR PROCESSOR. SELECT THEN VOICES THE COMPUTED CORRECTION TO FDO. IF THE N69 IS WITHIN LIMITS AND THE THRUST IS COMPATIBLE WITH THE CORRECTION, THE FDO RELAYS THE N69 TO THE CREW THRU THE CAPCOM AT TWO MINUTES INTO THE DESCENT. THE CREW INPUTS THE N69 VIA THE DSKY.

5-83 CIRCULARIZATION MANEUVER TARGETING

COMMENTS

THE CIRCULARIZATION MANEUVER CAN BE TARGETED TO RESULT IN A CIRCULAR ORBIT AT ANY SPECIFIED TIME. THE CHOICE OF TIME IS ARBITRARY BUT SHOULD BE CHOSEN TO SIMPLIFY RENDEZVOUS. THE TWO CHOICES ARE AT PDI TIME OR NOMINAL RENDEZVOUS TIME. THE SECOND OPTION WAS SELECTED BY DATA PRIORITY BECAUSE OF THE RELATIVELY LOW PROBABILITY OF HAVING TO ABORT A DESCENT AND THE DESIRABILITY OF MAKING THE NOMINAL RENDEZVOUS AS CLEAN AS POSSIBLE.

5-84 LLS POSITION UPDATING VIA SEXTANT SIGHTINGS

COMMENTS

DURING THE LUNAR ORBITS JUST PRIOR TO THE DESCENT MANEUVER, SEXTANT LANDMARK TRACKING WILL BE UTILIZED BY THE CSM TO ACCURATELY DETERMINE THE CSM POSITION RELATIVE TO THIS KNOWN LANDMARK. BY KNOWING THE EXACT INERTIAL POSITION OF THE CSM (MSFN) AND THE EXACT LOCATION OF THE LANDING SITE RELATIVE TO THE OBSERVED LANDMARK, THE INERTIAL POSITION OF THE LLS MAY BE ACCURATELY DETERMINED AND THUS COMPATIBLE WITH THE INERTIAL TARGETING OF THE POWERED DESCENT MANEUVER.

HOWEVER, ANY DIFFERENCES BETWEEN THE BEST PREMISSION VALUE OF THE LLS (PHOTOGRAPHS) AND THOSE OF THE SEXTANT SIGHTINGS MUST BE SCRUTINIZED FOR REASONABLENESS. EACH INTENDED LANDING SITE HAS INDIVIDUAL AMOUNTS OF DATA AVAILABLE REPRESENTING ITS KNOWN INERTIAL RELATIVE ACCURACY. THUS, A REASONABLE DIFFERENCE, IN TERMS OF ABSOLUTE NUMBER VAIRES WITH EACH SITE.

R	ITEM
	5-85

ALLOWABLE PLATFORM MISALIGNMENT FOR PDI.

COMMENTS---

THE POWERED DESCENT SHOULD NOT BE INITIATED IF THE PGNS WILL ACCUMULATE POWER NAVIGATION ERRORS SUCH THAT A LM ABORT WITH THE PGNS WOULD NOT ACHIEVE AN ORBIT WITH A PERICYNTHIAN GREATER THAN 30,000 FT. THESE NAVIGATION ERRORS CAN RESULT FROM UNCOMPENSATED STATIC DRIFTS OF THE LM PLATFORM. IF DRIFT RATES OF A LEVEL SUFFICIENT TO GIVE 0.6 DEG MISALIGNMENT ABOUT PITCH (Y AXIS) AND YAW (X AXIS) EXIST AT PDI THEN THE MANEUVER WILL BE SLIPPED ONE REVOLUTION IN AN EFFORT TO COMPENSATE THE DRIFT. THIS MISALIGNMENT MAGNITUDE ALLOWS A DESCENT ABORT FROM THE H3 TRAJECTORY AT ANYTIME WITH A RESULTANT SAFE ORBIT. THE DRIFT RATES ARE ESTABLISHED BY SUCCESSIVE P52'S AFTER FINE ALIGNING THE PLATFORM USING GROUND COMPUTED TORQUEING ANGLES.

PARTICIPATION---

GUIDANCE OFFICER

LM CONTROL

CAPCOM

FLIGHT CREW

DATA SOURCES---

LM OPTICS SUPPORT TABLE, MSK 239

TORQUEING ANGLES FROM LM PGNS P52

PROCEDURE---

THE LM PLATFORM IS COARSE ALIGNED TO THE CSM PLATFORM AT LM ACTIVATION. COARSE ALIGN INFORMATION IS THEN PASSED BY THE FLIGHT CREW TO THE GROUND WHO IN TURN COMPUTES FINE ALIGN TORQUEING ANGLES FOR EXECUTION BY THE CREW VIA V42. THIS RESULTS IN A LM PLATFORM ALIGNED WITHIN THE ACCURACY OF THE PROCEDURE. THE COMPLETE PROCEDURE IS THEN REPEATED EXCEPT THAT A SECOND V42 ISN'T EXECUTED. THE INTENT BEING THAT ANY SIGNIFICANT DRIFT WILL SHOW UP IN THE GROUND COMPUTED FINE ALIGN ANGLES. ALSO TWO SUCCESSIVE P52'S ARE PERFORMED TO FURTHER VERIFY STATIC DRIFT. WHEN UNACCEPTABLE DRIFT EXIST THEN PDI IS DELAYED, IF NECESSARY, UNTIL ADEQUATE GYRO COMPENSATION IS PERFORMED.

R	ITEM
	5-89

LANDING RADAR CONSTRAINTS

COMMENTS

IN ORDER TO SUCCESSFULLY COMPLETE THE POWERED DESCENT MANEUVER, UNCERTAINTIES IN LOCAL TERRAIN/ALTITUDE MUST BE MEASURED VIA LANDING RADAR TO EFFECT TOUCHDOWN. HOWEVER, THIS DATA MUST BE QUALITATIVELY JUDGED PRIOR TO ITS INCORPORATION. SHOULD LANDING RADAR DATA NOT BE AVAILABLE BEFORE THE PNGS ESTIMATE OF ALTITUDE REACHES 10,000 FEET, AN ABORT WILL BE PERFORMED. THIS ACTION IS SUBSTANTIATED BY DISPERSION ANALYSIS WHICH DEMONSTRATE THAT THE PNGS ESTIMATE OF ALTITUDE CAN BE SIGNIFICANTLY IN ERROR. SHOULD THIS ERROR BE SUCH THAT THE PNGS IS ACTUALLY LOWER THAN ITS OWN ESTIMATE, THE REMAINING GUIDANCE/TRAJECTORY PROFILE WILL UNKNOWINGLY PENETRATE THE LUNAR SURFACE. CONVERSELY, IF THE PNGS WERE TRULY HIGHER THAN ITS OWN ESTIMATE, CONTINUATION OF THE POWERED DESCENT WOULD RESULT IN FUEL DEPLETION.

A. SIXTY SECONDS AFTER LANDING RADAR LOCK ON HAS BEEN ACHIEVED, THE DIFFERENCE IN ALTITUDE ESTIMATES BETWEEN THE PNGS AND THE LANDING RADAR MUST BE WITHIN AN ACCEPTABLE TOLERANCE. ESTABLISHING A LIMITING DIFFERENCE PREVENTS LARGE ALTITUDE "DELTAS" FROM CAUSING UNACCEPTABLE TRANSIENTS IN THE DESCENT GUIDANCE/TRAJECTORY LOGIC.

B. DISPERSION ANALYSIS HAVE ALSO SHOWN THAT IF ACCEPTABLE LANDING RADAR IS CONTINUALLY AVAILABLE TO HIGH GATE, A SUBSEQUENT LOSS WILL NOT DEGRADE THE PNGS ABILITY TO REACH A SAFE POINT FROM WHICH THE PILOT MAY TAKEOVER AND LAND MANUALLY.

C&D THE ABOVE IS ALSO TRUE IN THE CASE WHERE THE LANDING RADAR HAS BEEN ACCEPTABLE BUT INTERMITTENT THROUGHOUT P-63 SO LONG AS THE UNCERTAINTY IN ALTITUDE IS LESS THAN 1000 FEET AT HIGH GATE OR LESS THAN 1000 FEET WHEN LOCK ON IS REGAINED.

PARTICIPATION

CREW

GDO

FDO

DATA SOURCE

PROCEDURES

SHOULD ANY OF THE ABOVE CONSTRAINTS BE VIOLATED, THE GROUND WILL RECOMMEND AN ABORT.

R	ITEM
	5-90 A.1,2,3,4

CRITERIA FOR TERMINATION OF POWERED DESCENT (PGNS NAVIGATION ERRORS)

COMMENT

THE POWERED DESCENT PHASE WILL NOT BE CONTINUED IF THE PGNS HAS NAVIGATION ERRORS SUCH THAT A LM ABORT WITH THE PGNS WOULD NOT ACHIEVE AN ORBIT WITH A PERICYNTHIAN ALTITUDE GREATER THAN 30,000 FEET. SINCE PNGS NAVIGATION ERRORS CAN ARISE FROM INITIAL CONDITION ERRORS (IMU MISALIGNMENT OR STATE VECTOR ERROR) OR FROM POWERED FLIGHT FAILURES (PIPA BIAS, IMU DRIFT, ETC.), THE AGS MAY OR MAY NOT CONFIRM A PGNS ERROR. IN ADDITION, FOR LOW TRAJECTORIES, THE PGNS WILL NOT BE ABLE TO PERFORM A SAFE ABORT WITHOUT LANDING RADAR ALTITUDE INFORMATION BEING INCORPORATED INTO THE STATE VECTOR.

RULE 5-90A - 1 PROVIDES THE LIMITS FOR THE CASES WHERE THE PGNS NAVIGATION ERRORS ARE CAUSED BY POWERED FLIGHT FAILURES, THE TRAJECTORIES ARE LOW, AND LANDING RADAR ALTITUDE INFORMATION IS MISSING.

RULE 5-90A - 2 PROVIDES THE LIMITS FOR THE CASES WHERE THE PGNS NAVIGATION ERRORS ARE CAUSED BY POWERED FLIGHT FAILURES. THE CROSSRANGE LIMIT IS BASED ON THE G AND N PIPA FAIL REDLINE.

RULE 5-90A - 3 PROVIDES THE LIMITS FOR THE CASES WHERE THE PGNS NAVIGATION ERRORS ARE CAUSED BY INITIAL CONDITION ERRORS, THE TRAJECTORIES ARE LOW, AND THE LANDING RADAR ALTITUDE INFORMATION IS MISSING.

RULE 5-90A - 4 PROVIDES THE LIMITS FOR THE CASES WHERE THE PGNS NAVIGATION ERRORS ARE CAUSED BY INITIAL CONDITION ERRORS ARE CAUSED BY INITIAL CONDITION ERRORS, OR A COMBINATION OF POWERED FLIGHT AND INITIAL CONDITION ERRORS.

PARTICIPATION

GUIDANCE OFFICER

FLIGHT DYNAMICS OFFICER

CAPCOM

DATA SOURCES

GUIDANCE STRIPCHARTS

GUIDANCE ASCENT/DESCENT DIGITALS

LAD, MSK 084

PROCEDURE

ACTION

GDO DETECTS AND CONFIRMS FROM THE GUIDANCE STRIPCHARTS OR MSK 218 THAT A COMPONENT DIFFERENCE LIMIT HAS BEEN VIOLATED. THE DEGRADING SYSTEM IS VERIFIED BY COMPARING THE VELOCITY DIFFERENCE BASED ON ALL SOURCES. IF THE DEGRADATION IS VERIFIED IN THE PGNS, GDO ANNOUNCES ''PGNS NO-GO. ABORT OVER FLIGHT DIRECTOR LOOP. AFTER DIRECTION FROM FLIGHT DIRECTOR, CAPCOM RELAYS THE SAME OVER THE AIR TO GROUND LOOP.

R	ITEM	
	5-90 A.5,7 8	POWERED DESCENT TERMINATION

COMMENTS

5. IN THE EVENT THE GUIDANCE COMMANDED THRUST SHOULD BEGIN TO INCREASE (NORMALLY DECREASES) PRIOR TO P-63/64 PROGRAM SWITCH, THE GUIDANCE WILL ULTIMATELY COMMAND RAPID AND SEVERE ATTITUDE GYRATIONS. THESE TRANSIENTS ARE; IN RESPONSE TO SUCH THINGS AS A LOW THRUSTING ENGINE OR FAILURE OF THE GUIDANCE TO CONVERGE UPON THE REQUIRED HIGATE TARGETS. IN ANY EVENT, THE GUIDANCE WILL FAIL TO CONVERGE WITH THE IMPLICIT RESULTS BEING CATOSTROPHIC.

IN THAT PROGRAM SWITCH OCCURS AT A TGO OF 60 SECS, THE ADDITIONAL 20-SEC TIME DELAY MAKES IT IMPOSSIBLE FOR THE GROUND TO RESPOND AFTER TGO = 80 SECS.

7. AS DESCRIBED ABOVE, ONCE THE POINT WHERE THE TIME DELAY FOR GROUND RESPONSE TO INCREASING THROTTLE COMMANDS HAS BEEN PASSED, THE CREW MUST ACTIVELY OBSERVE THE THROTTLE RESPONSE. AS THE CREW HAS NO MEANS OF VISUALIZING A THROTTLE INCREASE, THEY NEED ONLY RESPOND TO A FAILURE TO HAVE THE THRUST ENTER THE THROTTLEABLE REGION.

8. SHOULD THE THRUST FAIL TO COME UP TO THE FTP FOLLOWING IGNITION, THE GUIDANCE WILL NOT BE ABLE TO MEET THE DESIRED HIGATE CONDITIONS AS WILL BE EVIDENCED BY AN INCREASING GTC.

	5-90 A.9	CRITERIA FOR TERMINATION OF POWERED DESCENT (FAILURE OF LGC PROGRAM CHANGE)

COMMENT

TO REDUCE GUIDANCE SENSITIVES IN THE REGION OF HIGH GATE, THE LGC BRAKING PHASE (P63) TARGETS ARE PROJECTED PAST THE ACTUAL DESIRED CONDITIONS. FOR THE NOMINAL TARGETED DESCENT PROFILE, THE HIGH GATE CONDITIONS ARE SATISFIED A SPECIFIED DELTA TIME BEFORE THE TARGET CONDITIONS. THE DELTA TIME IS STORED IN ERASABLE MEMORY AS TENDBRAK AND CURRENTLY EQUALS 62 SECONDS. THE LGC AUTOMATICALLY EXITS P63 AND CALLS P64 ON THE FIRST COMPUTATION CYCLE AFTER T GO EQUALS 60 SECONDS. IF THIS DOES NOT OCCUR/ THE LGC HAS FAILED INTERNALLY. FAILURE OF THE PGNS REQUIRES SWITCHOVER TO THE AGS, THEREBY TERMINATING POWERED DESCENT.

PARTICIPATION

FLIGHT CREW

GUIDANCE OFFICER

CAPCOM

DATA SOURCES

ONBOARD DSKY

GUIDANCE ASCENT/DESCENT DIGITALS, MSK 218

PROCEDURE

A. INDICATION

CREW OBSERVES DSKY DISPLAYS FAIL TO CHANGE TO P64 WHEN THE P63 T GO DECREASES TO 60 SECONDS. GUIDANCE OFFICER OBSERVES TELEMETRY INDICATION OF P63 AFTER T GO DECREASES TO 60 SECONDS ON MSK 218.

B. ACTION

IF CREW TAKES ACTION, SWITCHED TO AGS AND ANNOUNCES ''ABORT, LGC NO-GO, P64 FAIL'' OVER AIR TO GROUND LOOP. IF GDO TAKES ACTION, ANNOUNCES ''LGC NO-GO, P64 FAIL SWITCHOVER TO AGS AND ABORT'', OVER FLIGHT DIRECTOR LOOP, CAPCOM RELAYS SAME OVER AIR TO GROUND LOOP.

R	ITEM
	5-90 A.10

CRITERIA FOR TERMINATION OF POWER DESCENT (PGNS PROGRAM ALARMS)

COMMENT

THE RELIABILITY OF THE LGC AS A CONTROL DEVICE IS DEPENDENT ON THE COMPUTATIONAL INTEGRITY OF THE SOFTWARE. THE LGC IS PROGRAMED TO RECOGNIZE INTERNAL FAULTS OR ERRONEOUS CONDITIONS, AND CONSEQUENTLY ISSUES A PROGRAM ALARM. THE ALARMS WHICH ARE CONSIDERED TO INVALIDATE THE LGC AS A GUIDANCE SYSTEM ARE LISTED BELOW---

ALARM CODE	ALARM FAULT
20105	AOT MARK SYSTEM IN USE
00214	PROGRAM USING IMU WHEN TURNED OFF
20430	ACCELERATION OVERFLOW IN INTEGRATION
20607	NO SOLUTION FROM TIME-THETA OR TIME-RADIUS ROUTINE
21103	UNUSED CCS BRANCH EXECUTED
01107	PHASE TABLE FAILURE, ASSUME ERASABLE MEMORY DESTROYED
21204	WAITLIST ON JOB FUNCTION CALLED WITH ZERO OR NEGATIVE DELTA TIME.
21302	SQUARE ROOT CALLED NEGATIVE ARGUMENT
21501	KEYBOARD AND DISPLAY ALARM DURING INTERNAL USE
00402 (CONTINUING)	FINDCDUW NOT CONTROLLING ATTITUDE

PARTICIPATION

GUIDANCE OFFICER

FLIGHT CREW

CAPCOM

DATA SOURCES

PROGRAM ALARM LIGHT LGC MONITOR H/S, ASCENT/DESCENT DIGITALS MSK 218

PROCEDURE

GROUND OR FLIGHT CREW OBSERVES THE PROGRAM ALARM LIGHT, AND IDENTIFIES THE ALARM VIA V05N09 OR LGC DOWNLIST OF FAILREG'S. IF THE ALARM IS ONE LISTED ABOVE, GUIDO ANNOUNCES, ''LGC NO-GO, SWITCHOVER TO AGS AND ABORT''.

R	ITEM

5-90B POWERED DESCENT TERMINATION

COMMENTS---

SHOULD AN ABORT BE REQUIRED DURING THE LATTER PORTIONS OF THE POWERED DESCENT TRAJECTORY, IT CANNOT BE PERFORMED IF THE ALTITUDE RATE (AT THE TIME OF THE ABORT) CANNOT BE NULLED BY THE ABORT MANEUVER, PRIOR TO PENETRATING THE LUNAR SURFACE.

CONVERSLY SHOULD THE ALTITUDE RATE EXCEED THE ABILITY OF THE LM TO NULL IT PRIOR TO PENETRATION A SUCCESSFUL LANDING OBVIOUSLY CANNOT BE COMPLETED AND AN ABORT IS REQUESTED.

PARTICIPATION

FDO

FD

CAPCOM

DATA SOURCE

H VS H DOT ANALOG

LAD

PROCEDURE---

DUE TO SIGNIFICANT TIME DELAYS ASSOCIATED WITH PROCESSING THE TRAJECTORY INFORMATION BY WHICH THIS DECISION IS MADE THE FDO MUST CAREFULLY ASSESS THE CURRENT VEHICLE STATE IN RELATIONSHIP TO THE ABORT LIMIT LINE. DEVIATIONS AWAY FROM THE NOMINAL THAT WILL CLEARLY VIOLATE THIS LIMIT LINE MUST BE RECOGNIZED AS REPRESENTING AN ABORT SITUATION AND APPROPRIATE REACTION'S REQUISITE.

5-91 NO TRAJECTORY CONSTRAINTS AFTER CREW TAKEOVER

COMMENTS

THROUGHOUT POWERED DESCENT, THE GROUND HAS THE CAPABILITY TO MONITOR PROPER OPERATION OF THE PNGS AND AGS AND THE EFFECT THAT THE GUIDANCE SYSTEM HAS ON THE DESCENT TRAJECTORY. THIS MONITORING ALLOWS LIMITATIONS TO BE IMPOSED ON THE GUIDANCE SYSTEM TO AVOID UNSAFE CONDITIONS. ONCE THE CREW HAS ASSUMED MANUAL CONTROL, NO INITIALIZATION OR PREDICTIONS OF THE RESULTANT TRAJECTORY CHARACTERISTICS CAN BE MADE-- AND THUS NO VALID MEANS OF LIMITING THE CREW'S ACTIONS CAN BE ESTABLISHED. THE PROBLEM IS FURTHER COMPLICATED BY THE TIME DELAYS ASSOCIATED WITH THE ACTION/REACTION/ACTION CYCLE NECESSARY TO AVERT AN UNDESIRABLE SITUATION.

PARTICIPATION

N/A

DATA SOURCE

N/A

PROCEDURE

N/A

R	ITEM
	5-101

LM LIFT-OFF DELAY

COMMENT---

THE ENTIRE RENDEZVOUS SEQUENCE IS DETERMINED BY THE CONDITIONS AT INSERTION.THESE CONDITIONS, THOUGH SOMEWHAT CORRECTABLE VIA A TWEAK MANEUVER, ARE TIGHTLY BOUNDED BY THE TIME OF LIFT-OFF. IN ORDER TO AVOID GREATLY DISPERSED OR EVEN ENTIRELY DIFFERENT RENDEZVOUS SEQUENCES, EXCESSIVELY LATE LAUNCHES MUST BE PREVENTED. IN MOST INSTANCES AN EARLIER DOCKING TIME IS OBTAINED BY DELAYING LIFT-OFF ONE REV AND LAUNCHING ON TIME.

FOR THE COELLIPTIC SEQUENCE RENDEZVOUS, LAUNCH MAY BE DELAYED 90 SECONDS WITH NO SLIP IN DOCKING TIME AND NO CHANGE IN THE RENDEZVOUS PROFILE.

FOR THE SHORT RENDEZVOUS, THE ACCEPTABLE DELAY IS 10 SECONDS, BUT THE CRITERION HERE IS ONE OF REASONABLENESS RATHER THAN PRECISE NUMBERS. DELAYS GREATER THAN 10 SECONDS BEGIN TO PRODUCE LARGE TWEAKS AS WELL AS LARGE TPI DELTA V'S. FUTHERMORE, IT IS FELT THAT 10 SECONDS IS ADEQUATE TIME FOR THE NECESSARY CREW TROUBLE-SHOOTING AND ANY PROBLEM NOT SOLVABLE IN THIS TIME FRAME IS THE TYPE PROBLEM THAT COULD MAKE THE SHORT RENDEZVOUS HAZARDOUS, THUS A ONE-REV DELAY IN LAUNCH IS WELL ADVISED.

PARTICIPATION---

CREW

PROCEDURES---

IF LAUNCH IS NOT AUTOMATICALLY INITIATED CREW WILL PROCEED THROUGH NO AUTO IGNITION CHECKLIST. IF NO IGNITION AFTER THAT, LAUNCH IS DELAYED ONE REV WHILE THE PROBLEM IS ATTACKED BY GROUND AND CREW.

R	ITEM

5-102. *CRITERIA FOR GUIDANCE SWITCHOVER TO AGS (PGNS FAILURE)*

COMMENTS

THE RELIABILITY OF THE LGC AS A CONTROL DEVICE IS DEPENDENT ON THE COMPUTATIONAL INTEGRITY OF THE SOFTWARE. THE LGC IS PROGRAMED TO RECOGNIZE INTERNAL FAULTS OR ERRONEOUS CONDITIONS, AND CONSEQUENTLY ISSUES A PROGRAM ALARM. THE ALARMS WHICH ARE CONSIDERED TO INVALIDATE THE LGC AS A CONTROL DEVICE ARE LISTED BELOW---

ALARM CODE	ALARM FAULT
20105	AOT MARK SYSTEM IN USE
00214	PROGRAM USING IMU WHEN TURNED OFF
20430	ACCELERATION OVERFLOW IN INTEGRATION
20607	NO SOLUTION FROM TIME-THETA OR TIME-RADIUS ROUTINE
21103	UNUSED CCS BRANCH EXECUTED
01107	PHASE TABLE FAILURE, ASSUME ERASABLE MEMORY DESTROYED
21204	WAITLIST ON JOB FUNCTION CALLED WITH ZERO OR NEGATIVE DELTA TIME
21302	SQUARE ROOT CALLED WITH NEGATIVE ARGUMENT
21501	KEYBOARD AND DISPLAY ALARM DURING USE

PARTICIPATION

GUIDANCE OFFICER

FLIGHT CREW

CAPCOM

DATA SOURCES

LGC MONITOR-H/S, ASCENT/DESCENT DIGITALS, MSK 1594, MSK 218

PROGRAM ALARM LIGHT

PROCEDURE

A. INDICATION

GROUND OR FLIGHT CREW OBSERVES PROGRAM ALARM LIGHT, AND IDENTIFIES THE ALARM VIA V05N09 (DISPLAY ALARM CODE) OR LGC DOWNLINKED FAILREG'S.

R	ITEM
	5-102E

CRITERIA FOR GUIDANCE SWITCHOVER TO AGS (PGNS NAVIGATION ERRORS)

COMMENT

DURING ASCENT THE INSERTION CONDITIONS ARE PREDICTED BY APPLYING THE EXPECTED ACCELERATION PROFILE TO THE ONBOARD AND GROUND NAVIGATION SOURCES. THE ACCELERATION THE AGS EPHEMERIS. THE INSERTION CONDITIONS MONITORED PROFILE IS GENERATED FROM THE STATE OF THE CURRENT GUIDANCE SYSTEM AND THE NOMINAL INSERTION TARGETS. THE PREDICTION CAPABILITY CAN BE USED TO DETERMINE THE REQUIREMENT FOR GUIDANCE SWITCH OVER TO THE AGS. IN DOING SO, THE EXPECTED PGNS PROFILE IS APPLIED TO ARE PERICYNTHION AND APOCYNTHIAN ALTITUDES AND WEDGE ANGLE.

THE MINIMUM ACCEPTABLE HP IS 30,000 FEET TO INSURE CREW SAFETY. THE ACCEPTABLE LIMITS FOR HA AND WEDGE ANGLE ARE TARGET VALUE PLUS 40 N.M. AND 1.0 DEGREE, RESPECTIVELY. THESE VALUES ARE ARBITRARILY SELECTED AS A REASONABLENESS LIMIT. SINCE SWITCHOVER WILL NOT BE REQUESTED AFTER T GO DECREASES BELOW 30 SECONDS, A SLIGHTLY DIFFERENT VALUE WILL BE USED FOR CALLING SWITCHOVER ON HP. PRELIMINARY ERROR ANLYSIS INDICATES THAT IF HP DECREASES TO 40,000 FEET AT T GO = 30 SECONDS, A 70 PERCENT PROBABILITY EXISTS THAT HP WILL DECREASE BELOW 30,000 FEET AT INSERTION. ALLOWING LESS THAN A 70 PERCENT CHANCE OF OBTAINING ACCEPTABLE CONDITIONS SEEMS UNREASONABLE. THEREFORE, SWITCHOVER WILL BE REQUESTED IF AGS PREDICTED HP DECREASES TO 40,000 FEET. SINCE THE HA AND WEDGE ANGLE LIMITS ARE STRICTLY ARBITRARY, NO PROTECTION WILL BE APPLIED FOR THE 30 SECOND EARLY DECISION.

PARTICIPATION

GUIDANCE OFFICER

CAPCOM

DATA SOURCES

DELTA VS HP, MSK 217

GUIDANCE ASCENT/DESCENT DIGITALS, MSK 218

PROCEDURE

A. INDICATION

GDO OBSERVES HA, HP, OR SIGMA APPROACH LIMIT VALUE. GDO DETERMINES WHICH SYSTEM IS DEGRADING BY COMPARING VELOCITY COMPONENTS, ATTITUDES, AND SELECTED TRAJECTORY PARAMETERS BASED ON ALL NAVIGATION SOURCES.

B. ACTION

IF ERRORS ARE DETERMINED TO BE IN THE PGNS AND T GO IS GREATER THAN 30 SECONDS, GDO DECLARES ''GUIDANCE SWITCHOVER, PGNS NAVIGATION'' OVER FLIGHT DIRECTOR LOOP. CAPCOM RELAYS SAME TO CREW OVER THE AIR TO GROUND LOOP.

R	ITEM	
	5-103A	CRITERIA FOR GUIDANCE SWITCHOVER TO AGS (PGNS FAILURE)

COMMENTS

SAME AS MISSION RULE 5-102A

PARTICIPATION

SAME AS MISSION RULE 5-102A

DATA SOURCES

SAME AS MISSION RULE 5-102A

PROCEDURE

SAME AS MISSION RULE 5-102A

R	ITEM
	5-103B

CRITERIA FOR GUIDANCE SWITCHOVER TO AGS (PGNS FAILURE)

COMMENTS

DURING THE POWERED ASCENT PHASE, CONTROL WILL BE SWITCHED TO THE AGS WHEN THE PGNS NAVIGATION DEGRADES TO THE EXTENT WHERE A SAFE INSERTION ORBIT CAN NO LONGER BE OBTAINED. THE DEGRADATION IN THE NAVIGATION IS MONITORED BY COMPARING TRAJECTORY PARAMETERS BASED ON PGNS, AGS, AND MSFN SOURCES. THE PRIMARY PARAMETERS MONITORED ARE VELOCITY COMPONENT DIFFERENCES. THE LIMITING VALUES OF THE DIFFERENCES HAVE BEEN RECOMMENDED BY GUIDANCE AND PERFORMANCE BRANCH/MPAD AS DELTA VX = 24 FPS, DELTA VY = 90 FPS, AND DELTA VZ = 37 FPS. THE VALUES WERE DETERMINED BY DISPERSION ANALYSIS USING THE MONTE CARLO TECHNIQUE. THE VALUES REPRESENT ERRORS WHICH PRECLUDE MAKING A SAFE ORBIT INSERTION. THUS, IF THE PGNS NAVIGATION IS CONFIRMED AS THE DEGRADED SYSTEM AND ANY PGNS-MSFN VELOCITY DIFFERENCE EXCEED THE LIMITING VALUE, SWITCHOVER TO AGS GUIDANCE WILL BE EXECUTED. IN SITUATIONS WHERE A VALID MSFN VECTOR ISN'T AVAILABLE DOPPLER/PGNS RESIDUALS WILL BE USED TO CONFIRM ANY AGS/PGNS DIFFERENCES. THE LIMITING DOPPLER/PGNS RESIDUALS ARE DEPENDENT ON THE LANDING SITE GEOMETRY RELATIVE TO THE EARTH/MOON LINE. FOR H3, THE LIMIT VALUES HAVE BEEN DETERMINED BY MPAD TO BE 10 FPS FOR DOWN RANGE ERRORS AND 33 FPS FOR RADIAL ERRORS. A LIMITING VALUE OF DELTA VY=45 FPS WILL BE MAINTAINED FOR DIRECT RENDEZVOUS AND DELTA VY=90 FPS WILL APPLY FOR A COELLIPTIC SEQUENCE. THIS IS TO PRECLUDE UNDESIREABLE OUT-OF-PLANE CONDITIONS AT TPI FOR THE DIRECT RENDEZVOUS. IT SHOULD BE NOTED THAT ONLY 0.5 DEG (45 FPS) OF WEDGE ANGLE IS STEERED OUT BY THE AGS DURING ASCENT.

PARTICIPATION

GUIDANCE OFFICER

FLIGHT DYNAMICS OFFICER

CAPCOM

FLIGHT CREW

FLIGHT DIRECTOR

DATA SOURCES

GUIDANCE ASCENT STRIPCHARTS

GUIDANCE ASCENT/DESCENT DIGITALS, MSK 218

TRAJECTORY PLOTBOARDS

TLM SOURCE COMPARISON, MSK 0085

PROCEDURE

THE GDO MONITORS THE MSFN, PGNS, AGS VELOCITY DIFFERENCES. THE GDO IN COOPERATION WITH FDO DETERMINES THE ERRONEOUS SYSTEM BY SWITCHING SOURCES ON TRAJECTORY PLOTBOARDS. IF THE PGNS IS DETERMINED AS THE DEGRADED SYSTEM AND ANY DIFFERENCE VALUE EXCEEDS THE LIMITING VALUE, GDO DECLARES OVER THE FLIGHT DIRECTOR LOOP, ''PGNS NAVIGATION NO-GO, AGS SWITCHOVER''. CAPCOM RELAYS RECOMMENDATION TO CREW OVER AIR TO GROUND LOOP. FLIGHT CREW PLACES THE GUID CONTROL SWITCH TO AGS.

R	ITEM	
	5-103C	CRITERIA FOR SWITCHOVER TO AGS GUIDANCE (AGS PREDICTED INSERTION CONDITIONS)

COMMENT

SEE RATIONALE FOR MISSION RULE 5-102B

PARTICIPATION

N/A

DATA SOURCES

N/A

PROCEDURE

N/A

5-103D CRITERIA FOR GUIDANCE SWITCHOVER TO AGS (PGNS FAILURE WITHOUT MSFN CONFIRMATION)

COMMENT

SEE RATIONALE FOR MISSION RULE 5-103B

PARTICIPATION

N/A

DATA SOURCES

N/A

PROCEDURE

N/A

R	ITEM
	5-104

DECLARATION OF AGS NO-GO FOR NAVIGATI65 ERRORS

COMMENT

SINCE CONSIDERATION MAY BE GIVEN TO UTILIZE THE AGS FOR GUIDANCE CONTROL FOR INSERTION, ITS NAVIGATION MUST BE MONITORED TO INSURE THE CAPABILITY FOR REACHING A SAFE ORBIT. THE NAVIGATION IS INITIALLY MONITORED IN THE SAME MANNER AS THE PGNS BY COMPARING VELOCITY COMPONENT DIFFERENCES. ONCE ANY VELOCITY DIFFERENCE IS VIOLATED, THE PREDICTED AGS INSERTION CONDITIONS ARE EVALUATED. THE AGS IS DECLARED NO-GO WHEN ERRORS RESULT IN INSERTION CONDITIONS THAT VIOLATE THE FOLLOWING---

HP LESS THAN 30000 FEET, HA GREATER THAN THE TARGETED VALUE PLUS 40 NAUTICAL MILES, OR A WEDGE ANGLE GREATER THAN 1 DEGREE.

PARTICIPATION

GUIDANCE OFFICER

FLIGHT DYNAMICS OFFICER

CAPCOM

FLIGHT CREW

DATA SOURCES

GUIDANCE ASCENT STRIPCHARTS

GUIDANCE ASCENT DESCENT DIGITALS, MSK 218

TRAJECTORY PLOTBOARDS

PROCEDURE

THE GDO MONITORS MSFN, PGNS, AGS VELOCITY DIFFERENCES AND PREDICTOR INSERTION CONDITIONS. THE GDO AND FDO COOPERATE TO DETERMINE THE ERRONEOUS SYSTEM BY SWITCHING PREDICTOR SOURCES. IF THE AGS IS DETERMINED TO BE THE DEGRADED SYSTEM AND EXCEEDS THE LIMITS, GDO DECLARES ''AGS NAVIGATION NO-GO'' OVER THE FLIGHT DIRECTOR LOOP. CAPCOM RELAYS THE SAME TO CREW OVER THE AIR TO GROUND LOOP.

R	ITEM
	5-105

NO GUIDANCE SWITCHOVER AFTER T GO = 30 SECONDS

COMMENT

GUIDANCE SWITCHOVER IS REQUESTED WHEN THE PRIMARY SYSTEM HAS DEGRADED AWAY FROM NOMINAL TO AN UNACCEPTABLE EXTENT. AFTER SWITCHOVER, LARGE STEERING TRANSIENTS ARE INCURRED AS THE BACKUP SYSTEM ATTEMPTS TO CORRECT THE DEVIATION. IF SWITCHOVER IS TO BE EXERCISED, ADEQUATE TIME SHOULD BE ALLOWED PRIOR TO INSERTION FOR THE TRANSIENTS TO BE DAMPED OUT. AS A RESULT, THE GROUND WILL NOT REQUEST GUIDANCE SWITCHOVER AFTER T GO EQUALS 30 SECONDS. THE TIME INTERVAL WAS SELECTED BASED ON PREVIOUS MISSION EXPERIENCE AND ACCOUNTS FOR DATA DELAYS AND REACTION TIMES.

PARTICIPATION

N/A

DATA SOURCES

N/A

PROCEDURE

N/A

R	ITEM	
	5-111	RENDEZVOUS MANEUVER SELECTION LOGIC

COMMENTS---

THERE ARE SEVEN ACCEPTABLE TECHNIQUES WHICH PROVIDE ONBOARD RENDZVOUS NAVIGATION. EACH OF THESE SCHEMES WILL PROVIDE CORRECTED STATE VECTORS WITH WHICH ONBOARD COMPUTERS CALCULATE RENDEZVOUS MANEUVERS. THE RULE IS PROVIDED THAT THE CREW MIGHT HAVE A BASIS FOR SELECTING THE MOST CORRECT OF THE SOLUTIONS AVAILABLE.

BY EXAMINING THE THREE AVAILABLE SOLUTIONS (PGNCS, AGS, CMC IN ORDER OF PRIORITY) THE CREW WILL ESSENTIALLY VOTE TWO-OF-THREE AND EXECUTE THE HIGHER PRIORITY OF THE MORE CLOSELY AGREEING SOLUTIONS. AGREEMENT HAS BEEN DEFINED BASED ON THE PREDICTED ACCURACIES OF THE VARIOUS NAVIGATION SCHEMES AND, WHILE SOME CASES MAY REALIZE BETTER AGREEMENT THAN THIS, THE NUMBERS PROVIDED ARE ADEQUATE FOR ALL RENDEVOUS PROFILES, INCLUDING DESCENT ABORTS.

IT IS RECOGNIZED THAT CERTAIN JUDGEMENTS WILL BE MADE BY THE CREW WHEN NAVIGATION SYSTEMS PERFORMANCE BECOMES DEGRADED DUE TO ONBOARD MALFUNCTIONS. IN SUCH CASES, WHEN GROUND ASSISTANCE IS UNAVAILABLE, CREW JUDGEMENT IS DEPENDED UPON TO EXECUTE THE MOST CORRECT OF THE AVAILABLE SOLUTIONS.

DATA SOURCES

CSM

LM

PARTICIPATION

CREW

PROCEDURE

ONBOARD

R	ITEM
	5-112

RENDEZVOUS TARGETING CONSTRAINTS

COMMENTS

LIFT-OFF WILL BE COMPUTED FOR BOTH THE COELLIPTIC SEQUENCE AND THE SHORT RENDEZVOUS OBSERVING SEVERAL CONSTRAINTS. THESE GUIDELINES ARE DESIGNED TO AFFORD AN ENTIRELY NOMINAL RENDEZVOUS IN TERMS OF CREW TRAINING, RELATIVE VEHICLE TRAJECTORIES, ETC., SO AS TO MAXIMIZE THE APPLICABILITY OF THIS TRAINING.

THE FIRST CONSTRAINT IS A 15 NM DELTA H. FOR THE COELLIPTIC SEQUENCE THIS DELTA H. IS ESTABLISHED AT CDH, WHILE IN THE SHORT RENDEZVOUS IT IS ONE OF THE TPI OFFSET CONDITIONS TO BE ACHIEVED. THIS NOMINAL DELTA H STANDARDIZES THE ENTIRE TERMINAL PHASE TRAJECTORY.

OTHER TPI POSITION CONSTRAINTS (FOR THE SHORT RENDEZVOUS) ARE THAT TPI WILL OCCUR 38 MINUTES AFTER INSERTION AT A PHASE ANGLE OF 1.69 DEG. FOR THE COELLIPTIC SEQUENCE RENDEZVOUS, TPI WILL OCCUR 16 MINUTES PRIOR TO SUNRISE AT AN ELEVATION ANGLE OF 26.6 DEG.

DATA PRIORITY HAS ESTABLISHED THAT THE SHORT RENDEZVOUS WILL BE ATTEMPTED (FROM A TRAJECTORY STANDPOINT), ONLY WHEN THE INSERTION WEDGE ANGLE IS PREDICTED TO BE ZERO. THIS CRITERION WAS DETERMINED BECAUSE OUT OF PLANE CONDITIONS AT TPF ARE GENERALLY UNDESIRABLE AND COMMITTING TO THE SHORT RENDEZVOUS KNOWING THESE CONDITIONS WILL EXIST WAS THOUGHT TO BE ILL-ADVISED. THUS, ONLY AS LONG AS ASCENT YAW STEERING CAN REDUCE THE INSERTION WEDGE TO ZERO. WILL THE SHORT RENDEZVOUS BE CONSIDERED AN ACCEPTABLE TECHNIQUE.

THE FINAL CONSTRAINT APPLIES ONLY TO THE COELLIPTIC SEQUENCE. SPECIFICALLY, LIFT-OFF WILL BE ESTABLISHED SUCH THAT CDH SHOULD BE APPROXIMATELY ZERO DELTA V. THIS CRITERION WAS ESTABLISHED IN DATA PRIORITY AS A DESIRABLE CONSTRAINT SINCE IT MAXIMIZES THE PROBABILITY OF BEING ABLE TO FOREGO CDH THUS AFFORDING A LONG, UNDISTURBED TRACKING ARC FOR THE TPI SOLUTIONS, IN ADDITION TO ELIMINATING ONE MANEUVER.

DATA SOURCES

RPT (RENDEZVOUS PLAN TABLE)

LTT (LAUNCH TARGETING TABLE)

MPT

PARTICIPATION

FDO

PROCEDURES

COELLIPTIC RENDEZVOUS SEQUENCE---

BY UTILIZING THE VARIOUS CONTROLS AVAILABLE IN THE LAUNCH WINDOW PROGRAM, FDO CAN ESTABLISH THE NOMINAL DELTA H AND TPI TIMES. THE GENERAL TECHNIQUE USED IS TO VARY BOTH HORIZONTAL AND RADIAL INSERTION VELOCITY UNTIL THE DESIRED CONDITIONS ARE MET. THIS IS NORMALLY DONE UTILIZING CURVES SUPPLIED BY MPAD. THE FINAL MANEUVER WILL BE TRANSFERRED FROM THE LAUNCH WINDOW (RPT) TO THE MPT.

SHORT RENDEZVOUS--- ALL SHORT RENDEZVOUS CONSTRAINTS CAN BE MET WITH ONE ITERATION OF THE LAUNCH TARGETING TABLE, ALL CONSTRAINTS ARE MET AUTOMATICALLY, THUS ELIMINATING THE NEED FOR MANUAL ITERATION. THE MANEUVER WILL BE COMPUTED IN THE LTT, TRANSFERRED TO THE LAUNCH WINDOW ON THE RPT, AND RETRANSFERRED TO THE MPT.

R	ITEM	
	5-113	COELLIPTIC SEQUENCE RENDEZVOUS EXECUTION CONSTRAINTS

COMMENTS

THE NOMINAL DELTA H IS DEFINED AS THE TARGETED DELTA H DURING RENDEZVOUS PLANNING. THIS DELTA H WILL BE MAINTAINED WITHIN +/- 5 MINUTES, AS LONG AS CONDITIONS WILL ALLOW. IT WILL HOWEVER, BE THE FIRST CONSTRAINT TO BE SLIPPED IN THE PRESENCE OF REAL TIME DISPERSIONS, ETC.

TPI WILL NOT BE MOVED ANY EARLIER THAN 31 MINUTES PRIOR TO SUNRISE DUE TO CSM TRACKING CONSTRAINTS. NAMELY, 31 MINUTES ALLOWS THE CMP 4 MINUTES AFTER SUNSET IN WHICH TO OBTAIN SEXTANT TRACKING FOR HIS TPI SOLUTION. SINCE THE CMC SOLUTION IS INVOLVED IN THE VOTING LOGIC CONCERNING WHICH TPI TO EXECUTE AND SINCE SEXTANT TRACKING IS REQUIRED (ALONG WITH VHF RANGING) TO OBTAIN A CMC SOLUTION, THIS CONSTRAINT MUST BE OBSERVED. THOUGH TPI IS SCHEDULED 16 MINUTES PRIOR TO SUNRISE, THIS CONSTRAINT ALLOWS IT TO BE MOVED UP TO 15 MINUTES EARLY IF REAL TIME CONDITIONS DICTATE. THERE IS NO CONSTRAINT ON MOVING TPI LATER THAN NOMINAL.

THE DELTA T BETWEEN CDH AND TPI IS NOMINALLY 38 MINUTES. THIS PRESENTS A COMFORTABLE TIMELINE FOR RENDEZVOUS NAVIGATION, MANEUVER COMPUTATION AND BURN PREPARATION. IN THE PRESENCE OF REAL-TIME DISPERSIONS, THIS DELTA MAY BE SHORTENED TO AS LITTLE AS 30 MINUTES, BUT THIS IS UNDESIREABLE. IT WILL BE MAINTAINED ABOVE 32 AS LONG AS IS FEASIBLE. THIS CONSTRAINT WILL BE THE LAST GUIDELINE TO BE VIOLATED.

DATA SOURCES

RET (RENDEZUOUS EVALUATION TABLE)

RPT (RENDEZVOUS PLAN TABLE)

MPT (MISSION PLAN TABLE)

PARTICIPATION

FDO

FLIGHT

CREW

PROCEDURES

DURING THE COURSE OF RENDEZVOUS PLANNING, FDO WILL EXAMINE PARAMETERS SUCH AS DELTA H, TPI TIME RELATIVE TO SUNRISE, ELEVATION ANGLE, ETC. THE NOMINAL LIFT-OFF WILL MAINTAIN ALL OF THESE PARAMETERS AT THEIR PREMISSION VALUES. AFTER INSERTION, HOWEVER, IF DISPERSIONS BEGIN TO DEVIATE THE TRAJECTORY FROM THE NOMINAL, CERTAIN OF THESE PARAMETERS WILL BE ALLOWED TO VARY. THE THREE PARAMETERS THAT ALLOW THE MOST FLEXIBILITY IN MANEUVER COMPUTATION/EXECUTION ARE TPI TIME, DELTA H, AND FINALLY THE DELTA T FROM CDH TO TPI.

THESE QUANTITIES WILL BE VARIED, AS REQUIRED, IN THE ORDER THEY ARE LISTED. REPRESENTATIVE VARIATIONS ARE--- +/- 5 MINUTES, +/- 3 N.M., AND + 3 TO 5 MINUTES. ONLY UNDER THE MOST EXTREME CIRCUMSTANCES WOULD THE DELTA T FROM CDH TO TPI BE DECRESASED SIGNIFICANTLY, AS THE DELTA T IS CRITICAL IN OBTAINING GOOD ONBOARD TPI SOLUTIONS. DELTA T IS CRITICAL IN OBTAINING GOOD ONBOARD TPI SOLUTIONS. IN FACT, DELETING CDH HAS BEEN SHOWN TO BE, IN CASES, AN ACCEPTABLE ALTERNATE TO SHORTENING THE DELTA T BETWEEN THE TWO MANEUVERS.

ENGINEERING JUDGEMENT, COUPLED WITH SIMULATION EXPERIENCE, MUST TEMPER THE VARIOUS TRADEOFFS THAT HAVE TO BE MADE DURING RENDEZVOUS PLANNING.

R	ITEM

5-114 TWEAK/BAIL-OUT DECISION CRITERIA

COMMENTS

DATA PRIORITY HAS ESTABLISHED CERTAIN CRITERIA IN THE PRESENCE OF WHICH THE BAIL-OUT MANEUVER (TO TRANSFER FROM THE SHORT RENDEZVOUS SEQUENCE TO THE STANDARD COELLIPTIC SEQUENCE) WILL BE EXECUTED. THE PRIMARY CONSIDERATION IS THE DELTA V LIMIT WHICH WAS ESTABLISHED USING TWO RATIONALE. THE FIRST IS THAT RETROGRADE TWEAKS ARE NECESSARILY LIMITED TO 60 FPS DUE TO LM -X RCS BURN CONSTRAINTS CONSIDERATIONS. SINCE THIS LIMIT EXISTS AND ANY VALUE FOR EITHER POSIGRADE OR OUT-OF PLANE TWEAKS GREATER THAN 60 FPS WOULD BORDER ON UNREASONABLENESS, THE SECOND RATIONALE IS SIMPLY A REASONABLENESS TEST. THUS, THE RULE STATES THAT ANY TWEAK LARGER THAN 60 FPS WILL RESULT IN EXECUTION OF THE BAIL-OUT MANEUVER.

THE SECONDARY (IN TERMS OF PROBABILITY) CONSIDERATION IS A PURE TRAJECTORY CONCERN, NAMELY THAT THE BAIL-OUT WILL BE EXECUTED IF THE POST-TWEAK PERICYNTHIAN IS LESS THAN 5 MINUTES. ALTHOUGH THIS PERILUNE IS ALWAYS BEHIND THE SPACECRAFT, AND PROPER EXECUTION OF THE ENSUING RENDEZVOUS WOULD RESULT IN CONTINUAL INCREASES IN PERILUNE, IT SEEMS WELL ADVISED TO MAINTAIN A CLEAR ORBIT AT ALL TIMES, IF ONLY TO PROTECT AGAINST THOSE REMOTE FAILURES THAT COULD LEAVE THE LM IN A LOW/IMPACTING ORBIT WITHOUT PROPULSION.

DATA SOURCES---

ARM

SHORT ARM

PARTICIPANTS

FDO

FLIGHT

CREW

PROCEDURES

AFTER INSERTION, FDO WILL EXAMINE THE TWEAK MANEUVERS ON THE SHORT ARM DISPLAY. AFTER DECIDING WHICH OF THE THREE, AVAILABLE SOLUTIONS (PNGS, AGS, MSFN) IS MOST CORRECT, THE RULES WILL BE INVOKED. IF EITHER CRITERIA IS VIOLATED, HE WILL RECOMMEND EXECUTION OF THE BAIL-OUT MANEUVER TO THE FLIGHT DIRECTOR. THE SOLUTION FOR THE BAIL-OUT MANEUVER IS AVAILABLE ON THE ARM DISPLAY AND WILL BE FROM THE SAME SOURCE AS THE ONE USED FOR THE TWEAK DECISION.

THE DECISION WILL BE VOICED TO THE CREW AT APPROXIMATELY INSERTION PLUS 2 MINUTES ALONG WITH THE IGNITION TIME AND DELTA V COMPONENTS. THE CREW WILL EXECUTE THE TWEAK AT INSERTION PLUS 3 MINUTES OR THE BAIL-OUT AT INSERTION PLUS 5 MINUTES.

R	ITEM
	5-115

REQUIRED RENDEZVOUS NAVIGATION TECHNIQUES

COMMENTS---

DATA PRIORITY HAS ESTABLISHED THAT IN ORDER TO COMMIT TO THE SHORT RENDEZVOUS, TWO INDEPENDENT ONBOARD NAVIGATION METHODS MUST BE AVAILABLE. THE LISTED TECHNIQUES REPRESENT THOSE METHODS THAT ARE ADEQUATE TO SUPPORT THIS RENDEZVOUS PROFILE. BASED ON THIS GROUNDRULE, A MATRIX WAS CONSTRUCTED TO IDENTIFY THOSE COMBINATIONS OF FAILURES WHICH VIOLATE THIS CRITERION (SEE RULE 3-81).

THE RATIONALE BEHIND THIS DECISION WAS---

1. DUE TO THE SENSITIVITY OF THE SHORT RENDEZUOUS TRAJECTORY TO 3G DISPERSIONS, THE GROUND (UTILIZING MSFN DATA) IS NOT NOMINALLY CONSIDERED AN ACCEPTABLE SOURCE FOR TPI.

2. THE GROUND CAN COMPUTE AN ACCEPTABLE CSI, CDH, AND TPI SEQUENCE USING MSFN DATA. SINCE THIS SEQUENCE IS ONLY SLIGHTLY LESS DESIREABLE THAN THE NOMINAL TECHNIQUE, IT IS THE PRIMARY BACKUP AND WILL BE EXECUTED IN ALL CASES (EXCEPT TIME CRITICAL). DURING THE COELLIPTIC SEQUENCE HOWEVER, THE GROUND IS ONLY A BACKUP FOR MANEUVER COMPUTATION AND WILL PASS SOLUTIONS FOR EXECUTION ONLY WHEN VEHICLE SYSTEM FAILURES MAKE ONBOARD NAVIGATION IMPOSSIBLE.

3. A GROUND COMPUTED TPI (FOR THE SHORT RENDEZVOUS) IS THE LEAST DESIREABLE OF THE OPTIONS FOR RENDEZOUS. IN CRITICAL SITUATIONS HOWEVER, BROUGHT ABOUT BY SINGLE OR MULTIPLE FAILURES POST-TWEAK, THE GROUND WILL PASS TPI FOR ONBOARD EXECUTION. HOWEVER, ONBOARD NAVIGATION IS RECOGNIZED AS MANDATORY FOR MCC 2 COMPUTATION THESE CASES.

COMMITMENT TO THE SHORT RENDEZVOUS MAY INVOLVE TWO DIFFERENT TIME-FRAMES. MAJOR SYSTEMS VERIFICATION WILL BE CONDUCTED PRIOR TO LIFT-OFF. IF AT THAT TIME ALL CRITICAL SYSTEMS ARE VERIFIED-WHETHER BY ACTUAL TEST OR ASSUMPTIONS BASED ON PREVIOUS PERFORMANCE-L/O WILL BE TARGETED ASSUMING THE SHORT PROFILE. IF SYSTEM FAILURES CAUSE VIOLATION OF THE MATRIX IN RULE 3-81, L/O WILL BE TARGETED FOR THE COELLIPTIC SEQUENCE.

ANOTHER GO/NO GO OPPORTUNITY IS PRESENTED IN THE TIME FRAME BETWEEN INSERTION AND THE TWEAK/BAIL OUT DECISION. SINCE THIS TIME FRAME (2-3 MINUTES) IS TOO BRIEF FOR MAJOR SYSTEM CHECKS, ONLY THE MANDATORY LM COMPUTERS WILL BE VERIFIED, BASED UPON THEIR ASCENT PERFORMANCE. ALL OTHER SYSTEMS WHICH WERE VERIFIED ON THE SURFACE ARE ASSUMED TO BE FUNCTIONING PROPERLY. FAILURE OF A MANDATORY COMPUTER WOULD NORMALLY RESULT IN EXECUTION OF THE BAIL OUT MANEUVER.

PARTICIPANTS---

FLIGHT DIRECTOR

FDO

GUIDANCE

CONTROL

TELMU

G&C

CREW

PROCEDURES---

1. PRIOR TO L/O, ALL INVOLVED MOCR POSITIONS MUST IDENTIFY TO FLIGHT ANY FAILED SYSTEMS. THIS MAY REQUIRE CREW CHECKS. FLIGHT WILL DETERMINE WHICH RENDEZVOUS PROFILE IS TO BE EXECUTED.

2. FDO WILL TARGET L/O AS A FUNCTION OF THE PROFILE TO BE FLOWN.

3. AT INSERTION, STATUS OF ANY MANDATORY LM COMPUTER WELL CHECKED. BARRING FAILURE OF A COMPUTER, THE NOMINAL RENDEZVOUS TIMELINE WILL PROCEED.

4. FDO WILL PASS THE TWEAK OR THE BAIL OUT MANEUVER IN ACCORDANCE WITH THE POST-INSERTION DECISION.

R	ITEM

5-121 TEC MCC ENTRY TARGETING

COMMENTS

A. THE STEEP TARGET LINE IS FOR THE CENTER OF THE CORRIDOR. THIS INSURES A SAFE ENTRY FROM HIGH GS (THE NOMINAL IS ABOUT 6G) AND AT THE SAME TIME, IT AVOIDS FLYING IN A SENSITIVE REGION OF THE CORRIDOR THAT IS SUSCEPTIBLE TO SKIPPING OUT.

THE G AND N OPERATES VERY WELL FROM THE STEEP TARGET LINE EXCEPT THAT IT LIMITS THE MAXIMUM RANGE CAPABILITY TO LESS THAN 2000 N.M., BUT THE NOMINAL ENTRY RANGE IS APPROXIMATELY 1250 N.M., SO THIS DOES NOT CAUSE ANY PROBLEM. THE EMS ENTRY MODE USES THE CONSTANT G MODE UNTIL THE ENTRY VELOCITY FALLS BELOW 25,500 FPS, AND THEN THE EMS IS USED FOR RANGING SO ITS OPERATION IS COMPATIBLE WITH THE STEEP TARGET LINE.

B. THE SHALLOW TARGET LINE ALLOWS THE G AND N TO FLY ITS MAXIMUM RANGING CAPABILITY OF 2500 N.M. FOR LUNAR RETURN VELOCITIES. THIS IS A SKIP-TYPE ENTRY WHICH IS A VERY SENSITIVE TYPE OF ENTRY. FOR VELOCITIES EQUAL TO OR LESS THAN 31,000 FPS, THE STEEP TARGET LINE LIMITS THE G AND N GUIDED RANGE TO AROUND 1300 N.M. FOR VELOCITIES EQUAL TO OR LESS THAN 31,000 FPS, THE SHALLOW TARGET LINE IS REQUIRED IN ORDER FOR THE G AND N TO FLY GREATER RANGES.

5-122 TEC MCC PHILOSOPHY

COMMENTS

A AND B.

THE G AND N IS THE BEST MODE FOR CONTROLLING A BURN, AND IS DESIRED. WHEN THE GAMMA IS OUTSIDE THE ENTRY CORRIDOR, AN MCC WILL BE SCHEDULED, AS SOON AS IT CAN BE WORKED INTO THE TIMELINE BECAUSE IT IS DESIRABLE TO STAY WITHIN THE CORRIDOR AT ALL TIMES.

C. AN SPS MINIMUM IMPULSE BURN RESULTS IN A DELTA V THAT IS A FUNCTION OF THE MASS OF THE VEHICLE CONFIGURATION. PREMISSION TRANSEARTH PLANNING RESULTS IN A DELTA V EQUIVALENT TO A MINIMUM IMPULSE VALUE WHICH REFLECTS NOMINAL MANEUVERS. BUT MANEUVERS ARE NEVER COMPLETELY NOMINAL, HENCE, A PERMISSION DELTA V BASED ON THE NOMINAL MAY NOT BE RELEVANT TO THE REAL TIME MINIMUM IMPULSE DELTA V. IN FACT, IT IS POSSIBLE TO DEFINE A DELTA V SMALLER THAN THE REAL TIME MINIMUM IMPULSE DELTA V WHICH MEANS THAT TO USE THE SPS FOR AN MCC, ONE WOULD HAVE TO VIOLATE THE RULE. THEREFORE, IT IS BEST TO DEFINE THE DELTA V AS THAT INHERENT IN A MINIMUM IMPULSE SPS BURN.

REFERENCE

DATA PRIORITY

OPERATIONAL OPINIONS.

R	ITEM
	5-123

TEC MCC FOR LANDING AREA CONTROL

COMMENTS

A&B. AN MCC CAN BE USED TO CONTROL THE LANDING AREA PRIOR TO EI-24 HRS FOR AVOIDING BAD WEATHER, OR FOR RECOVERY ACCESS.

EI	DELTA V REQUIRED TO CHANGE LANDING LONGITUDE 1 DEG
60-70 HRS	APPROX. 5 FPS
24 HRS	APPROX. 25 FPS
15 HRS	APPROX. 55 FPS

THE DATA ABOVE SHOW THAT AFTER EI-24 HRS, IT TAKES QUITE A BIT OF DELTA V TO CHANGE THE LANDING AREA VERY MUCH. IF A LARGE MCC IS DONE, IT WOULD REQUIRE SEVERAL HOURS OF TRACKING AND THEN ANOTHER MCC PRIOR TO ENTRY. BUT PRIOR TO EI-24 HRS, THE AREA CAN BE CHANGED WITHOUT MUCH DELTA V AND WITH PLENTY OF TIME TO TRACK AND DO ANY NEEDED MCC.

IT SHOULD BE EMPHASIZED THAT THE LOCATION OF THE OPERATIONAL FOOTPRINT HAS AS ITS PRIMARY OBJECTIVE THE REQUIREMENT THAT IT CONTAIN NO LAND MASSES. BECAUSE OF THE RELATIVELY LARGE NUMBER OF SMALL ISLANDS IN THE MID-PACIFIC AREA, IT IS NOT ALWAYS POSSIBLE TO MEET THE ABOVE REQUIREMENT. IN THESE CASES, SMALL LAND MASSES ARE ACCEPTABLE WITHIN THE FOOTPRINT, PROVIDED THAT THEY ARE AWAY FROM THE PRIME AND BACKUP TARGETS WITHIN THE FOOTPRINT, THAT IS, IN AREAS WHERE OPERATIONAL OPINION DICTATES THAT LAND IMPACT IS HIGHLY UNLIKELY BECAUSE THESE AREAS REPRESENT EXTREME GUIDANCE DISPERSIONS WITHIN SYSTEM LIMITS.

IN REAL TIME FOR REASONS OF WEATHER AVOIDANCE, GUIDANCE, OR TRAJECTORY ANOMALIES, IT MAY BECOME NECESSARY TO SHIFT THE FOOTPRINT TO ACCOMMODATE A RELOCATION OF THE TARGET POINT. IN SUCH CASES, THE SHIFT OF THE FOOTPRINT MAY RESULT IN CONTAINING LAND MASSES. IF THIS OCCURS, A REAL TIME AGREEMENT MUST RESULT BETWEEN FDB AND LRD TO BUY OFF ON THE ACCEPTABILITY OF THESE LAND MASSES WITHIN THE FOOTPRINT.

NOTE---

THE AREA THAT IS OPERATIONALLY ACCESSIBLE IS BASED UPON ENTRY FLIGHT PATH ANGLES BETWEEN - 6.3 DEGREE TO - 6.6 DEGREE (MCC-7 EXECUTION CRITERIA) AND THE DISPERSIONS ASSOCIATED WITH EACH OF THE ENTRY MODES. THE EI POINT AND THE CONSTANT 4G RANGE POTENTIAL VARY AS THE ENTRY FLIGHT PATH ANGLE VARIES ABOUT THE NOMINAL OF -6.5 DEGREE. THE EI POINT CHANGES 10 N.M. PER .1 DEGREE AND THE CONSTANT 4G RANGE POTENTIAL CHANGES 25 N.M. UPRANGE PER -.1 DEGREE AND 45 N.M. DOWNRANGE PER +.2.

THE G AND N LANDING AREA - THE 70 N.M.TO EITHER SIDE OF THE GROUND TRACK IS THE CROSSRANGE CAPABILITY OF THE G AND N AT 1250 N.M. THE 915N.M.UPRANGE IS THE SHORTEST POSSIBLE RANGE FOR A CONSTANT 4G ENTRY. THE 2000N.M. DOWNRANGE IS BASED ON FLYING THE G AND N TO THE MAXIMUM OPERATIONAL RANGE OF 1800 N.M. AND ALLOWING AN ADDITIONAL 200 N.M. PAD.

THE EMS LANDING AREA - THE +/- 52 N.M. IN CROSSRANGE IS THE EMS CROSSRANGE DISPERSION. THE 61 N.M. UPRANGE BOUNDARY IS THE SUM OF---

A. 26 N.M. FROM EMS DISPERSION.

B. 10 N.M. FROM -.1 DEGREE FLIGHT PATH ANGLE CHANGE.

C. 25 N.M. FROM 4G RANGE POTENTIAL CHANGE.

THE 91 N.M. DOWNRANGE BOUNDARY IS THE SUM OF---

A. 26 N.M. FROM EMS DISPERSION.

B. 20 N.M. FROM &.2 DEGREE FLIGHT PATH ANGLE CHANGE.

C. 45 N.M. FROM 4G RANGE POTENTIAL CHANGE.

FOR AN EARLY G AND N FAILURE, THE EMS ENTRY IS TARGETED TO THE CONSTANT 4G TRAGET POINT; THEREFORE, THE OPERATIONAL FOOTPRINT ASSUMES THAT THE EMS TARGET POINTS ARE COINCIDENT WITH THE CONSTANT 4G TARGET POINTS.

R	ITEM
	5-123 CONT'D

THE CONSTANT 4G LANDING AREA - THE +/- 27 N.M., IS THE CROSSRANGE DISPERSION FOR A CONSTANT 4G ENTRY. THE 110 N.M. UPRANGE BOUNDARY IS THE SUM OF ---

A. 73 N.M. FROM 4G DISPERSION.

B. 10 N.M. FROM -.1 DEGREE FLIGHT PATH ANGLE CHANGE.

C. 25 N.M. FROM 4G RANGE POTENTIAL CHANGE.

THE 140 N.M. DOWNRANGE BOUNDARY IS THE SUM OF---

A. 73 N.M. FROM 4G DISPERSION.

B. 20 N.M. FROM +.2 DEGREE FLIGHT PATH ANGLE CHANGE.

C. 45 N.M. FROM 4G RANGE POTENTIAL CHANGE.

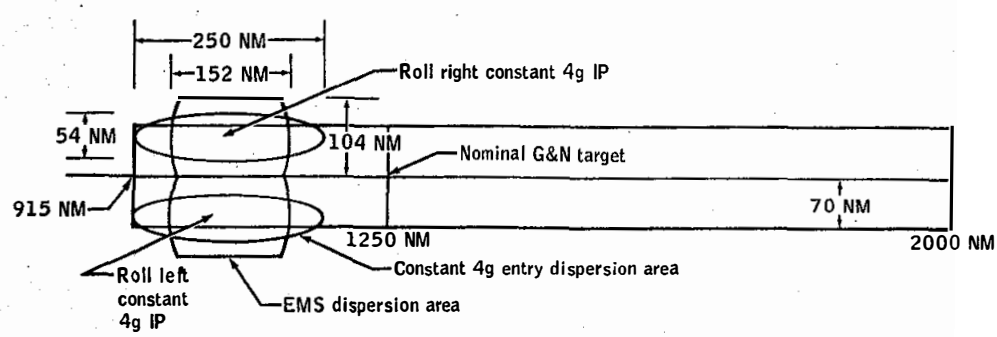

R	ITEM
	5-125

BACKUP ENTRY CONSTRAINTS

COMMENTS

A. THE CONSTANT G ENTRY IS A BACKUP TO THE G AND N ENTRY MODE. AFTER PEAK G THE LIFT VECTOR IS MANUALLY BANKED TO THE RIGHT (NORTH) AND CONTROLLED TO MAINTAIN A PREDETERMINED G-LEVEL. A CONSTANT G MODE OF EQUAL TO OR LESS THAN 3 G IS VERY SENSITIVE AND MAY SKIP OUT. A CONSTANT G MODE OF EQUAL TO OR GREATER THAN 5 G IS DIFFICULT TO CONTROL BECAUSE IT REQUIRES SEVERAL LARGE CORRECTIONS (30 DEG - 50 DEG) OF THE LIFT VECTOR ORIENTATIONS TO MAINTAIN THE CONSTANT G. THERE IS ALSO A CREW HAZARD ASSOCIATED WITH SUSTAINED G'S OF 5 G.

B. THE EMS IS USED FOR RANGING ONLY WHEN THE G AND N HAS FAILED. IN THIS CASE, THERE IS NOT ANY POSITIVE CHECK ENTRY, IT COULD CAUSE A TRAJECTORY THAT WOULD SKIP OUT AND BE CATASTROPHIC-- BUT, ONCE THE VELOCITY IS EQUAL TO OR LESS THAN 25,500 FPS AN EMS FAILURE WOULD ONLY CAUSE A MISS OF THE TARGET. DURING THE EARLY PART OF THE ENTRY, THE CONSTANT G MODE CAN BE FLOWN USING THE EMS G DISPLAY AND CHECKED BY THE G-METER OR VICE VERSA. IF THEY DISAGREE, A SEAT-OF-THE-PANTS MEASUREMENT MUST BE USED TO DETERMINE WHICH IS CORRECT.

REFERENCE

MEMORANDUM, SUBJECT--- LOAD FACTOR DURATION ENCOUNTERED DURING LUNAR RETURNS ENTRY WITH THE CONSTANT G BACKUP MODE, DATED AUGUST 7, 1968.

R	ITEM	
	5-126	WEATHER AVOIDANCE DURING ENTRY

COMMENTS

THE G AND N HAS THE CAPABILITY OF FLYING AN ENTRY FROM 1100 N.M. TO 2500 N.M. RANGE, BUT IT HAS BEEN AGREED WITH THE CREW IN DATA PRIORITY MEETINGS THAT THE RANGE WILL BE LIMITED TO 1800 N.M. A RANGE OF LESS THAN 1800 N.M. AVOIDS THE USE OF P66. P66 TARGETS FOR A TRAJECTORY THAT SKIPS TO A REGION WHERE THE DRAG LEVEL IS LESS THAN 0.2G.

THEREFORE, THE G AND N ENTRY RANGE CAN BE VARIED FROM 1100 N.M. TO 1800 N.M. FOR AVOIDING WEATHER AND THE EMS ENTRY RANGE CAN VARY FROM 1100 N.M. TO 1600 N.M. FOR WEATHER AVOIDANCE.

REFERENCE

OPERATIONAL OPINIONS. DATA PRIORITY S-PA-9T-040 (TEI, MCC AND ENTRY).

SECTION 3 - TRAJECTORY AND GUIDANCE

R	ITEM	
	5-127	PREDICTED ENTRY CORRIDOR VIOLATION AFTER THE LAST MCC OPPORTUNITY

COMMENTS

THE LAST MCC IS SCHEDULED AT EI-3 HRS, AND IT TAKES ABOUT AN HOUR OF TRACKING TO DETERMINE AN ACCURATE STATE VECTOR AFTER THE BURN. AT EI-3 HRS, IT TAKES APPROX. 8 FPS TO CORRECT 1 DEG OF GAMMA AT EI, BUT AFTER ABOUT EI-2 HRS, THE DELTA V REQUIRED TO CORRECT GAMMA AT EI GROWS RAPIDLY.

IF THE UNDERSHOOT LINE IS EXCEEDED, FULL LIFT SHOULD BE FLOW UNTIL AFTERPEAK G TO AVOID HIGH GS. THEN THE CONTROL MAY BE GIVEN TO THE G AND N TO GET AS CLOSE TO THE TARGET AS POSSIBLE.

IF THE OVERSHOOT LINE IS EXCEEDED, NEGATIVE LIFT SHOULD BE FLOWN UNTIL AFTER 2G'S ARE REACHED TO ASSURE CAPTURE. IN THIS CASE THE G AND N WOULD FLY UP AGAINST THE 10G LIMITER, TRYING TO HIT THE TARGET, BUT WOULD STILL LAND LONG-- THEREFORE, AFTER CAPTURE A CONSTANT 4G ENTRY SHOULD BE FLOWN. THE 4G ENTRY HAS A SHORT RANGE ASSOCIATED WITH IT AND WOULD AVOID THE HIGH G'S.

REFERENCE

OPERATIONAL OPINION. DATA PRIORITY S-PA-9T-040 (TEI, MCC, AND ENTRY).

R	ITEM

5-130 G AND N NO-GO CRITERIA DURING ENTRY

COMMENTS

A. AND B.

WHEN THE ENTRY RANGE IS GREATER THAN 1350 N.M., THE CMC WILL ENTER P65 WHICH DISPLAYS A TARGET VELOCITY AS VL AND DL AND CAN BE USED TO QUALIFY THE CMC NAVIGATION PRIOR TO P65 IN ORDER TO COMMIT THE G AND N FOR THE REMAINDER OF THE ENTRY. THE CREW IS VOICED THE G AND N GO/NO-GO. THE LIMITS ARE BASED ON VARIOUS ERRORS SOURCES (ATMOSPHERE, L/D, G AND N 3 SIGMA ERRORS, ETC.) WHICH ARE FIXED PREMISSION, HOWEVER, THE LIMITS MUST ALSO INCLUDE A BIAS FOR THE SPECIFIC ENTRY RANGE AND ENTRY CONDITIONS WHICH CANNOT BE FIXED PREMISSION. THEREFORE, THE LIMITS ON VL AND DL WILL BE DETERMINED FROM CURVES DURING REAL TIME.

C. AND D.

THE G AND N IS DESIGNED SUCH THAT IT SHOULD ALWAYS FLY THE ENTRY WITHIN THE EMS ON-SET AND OFF-SET LIMIT LINES. IF THE G-METER AGREES WITH THE G INDICATED BY THE EMS, THERE ARE TWO INDEPENDENT SOURCES THAT INDICATE THE G AND N IS NOT PERFORMING PROPERLY.

E. AND F.

AT EI-17 MIN. A HORIZON MONITOR ATTITUDE CHECK IS MADE ON THE G AND N. THE CREW ORIENTS THE S/C TO A HEADS DOWN, BLUNT-END FORWARD ATTITUDE WITH THE 31.7 DEG WINDOW MARK ON THE HORIZON AND COMPARE THE PITCH GIMBAL ANGLE WITH THE PAD VALUE. IF THE DIFFERENCE IS GREATER THAN +/- 5, THE G AND N IS NO-GO.

G. NO RATIONALE REQUIRED.

5-131 TEI ABORTS AND RESIDUAL TRIMMING PHILOSOPHY

COMMENTS

ONCE THE SPS BURN HAS BEGUN FOR THE TEI MANEUVER THERE SHOULD BE NO MANUAL SHUTDOWNS DURING THE BURN. THERE SHOULD BE AS MANY MANUAL RESTARTS AN NECESSARY TO COMPLETE THE BURN.

WHERE THERE IS A PREMATURE SHUTDOWN FOR CAUSES OTHER THAN A MANUAL SHUTDOWN, ACTION IS PREDICATED ON THE RCS DELTA V CAPABILITY BECAUSE THE RCS IS THE ONLY VIABLE THRUSTER CAPABILITY REMAINING. EXPERIENCE HAS SHOWN THAT THE COMPUTED TEI MANEUVER PERFORMED UNDER G+N CONTROL HAS NEVER RESULTED IN TEC MIDCOURSES TOTALING GREATER THAN 8 FPS. IT CAN ALSO BE SHOWN THAT THE DELTA V NEEDED TO CORRECT TEI DISPERSIONS AT CUTOFF GROWS TO 2.5 TIMES THAT VALUE AT TEI +17 HOURS, MCC 5 NOMINAL EXECUTION TIME. IT IS DESIRED TO MAINTAIN 20 FPS FOR RCS DELTA V MCC CAPABILITY. THEREFORE IF THE ENGINE SHUTS DOWN WITH TEI DELTA V REMAINING GREATER THAN RCS DELTA V CAPABILITY LESS 20 FPS THE SPS SHOULD BE RESTARTED ASAP AND THE TARGETED BURN COMPLETED. THIS WILL MAINTAIN ALL RCS DELTA V CAPABILITY TO PERFORM MIDCOURSES WITH. THE BURN NEED NOT BE TRIMMED SINCE THE CORRECTIVE DELTA V GROWTH RATE IS SMALL AND CAN BE TAKEN CARE OF WITH THE MIDCOURSE MANEUVERS.

IF THE ENGINE SHUTS DOWN WITH TEI DELTA V REMAINING LESS THAN RCS DELTA V CAPABILITY LESS 20 FPS THE CREW AT THEIR DISCRETION CAN EITHER RESTART THE SPS OR USE THE RCS ASAP TO COMPLETE THE TARGETED BURN. THE BURN NEED NOT BE TRIMMED FOR THE ABOVE REASON. IF THE SPS IS USED, ALL RCS DELTA V CAPABILITY REMAINS FOR MIDCOURSE CORRECTION. IF THE RCS IS USED TO COMPLETE THE BURN AT LEAST 20 FPS REMAINS FOR MIDCOURSE CORRECTIONS WHICH HAS BEEN SHOWN TO BE SUFFICIENT.

IF THE CUTOFF RESIDUALS ARE LESS THAN 5 FPS THE RCS CAN BE USED TO TRIM THE BURN PROPERLY. ANY ERRORS CAN BE TAKEN OUT IN THE MIDCOURSE. IT'S BEST TO TRIM THE BURN ACCURATELY IN X AND Z BECAUSE THEY AFFECT LONGITUDE AND CORRIDOR CONTROL FOR ENTRY.

R	ITEM
	5-131 CONT'D

ALL THE ABOVE IS APPLICABLE TO A DPS TEI ALSO. WHERE A DPS TEI IS DONE WITH AN OPERATIONAL SPS AS A BACKUP AND THE DPS SHUTDOWN IN THE MODE III REGION, THE DPS SHOULD BE ABANDONED AND THE SPS RETARGETED FOR THE NEXT TEI WHICH WILL OCCUR NEAR THE NEXT PERICYNTHION. THIS IS THE OPTIMUM TIME IN TERMS OF DELTA V. IF THE SHUTDOWN OCCURS IN THE MODE I REGION THE DPS SHOULD BE ABANDONED AND THE SPS TARGETED AT TEI + 2 HOURS TO ACHIEVE ENTRY CONDITIONS. AT LEAST TWO HOURS IS NECESSARY TO CONFIRM THE ORIGINAL MANEUVER, BUILD A USABLE VECTOR TO COMPUTE THE CORRECTIVE MANEUVER, DO THE COMPUTATIONS, READY THE SYSTEMS AND PASS THE DATA TO PERFORM THE MANEUVER. IT IS NOT WISE TO WAIT MUCH BEYOND 2 HOURS BECAUSE THE TRAJECTORY THAT RESULTS FROM A SHUTDOWN IN THE MODE I REGION IS A NON-EARTH ENTERING TRAJECTORY AND THE SOONER THE CREW GETS BACK ONTO THE CORRECT TRAJECTORY THE BETTER SINCE THE CORRECTIVE DELTA V REQUIRED GROWS RAPIDLY.

IN THE CASE WHERE THERE NO SPS OR DPS IGNITION ON THE ORIGINAL TEI MANEUVER IT IS BETTER TO SLIP 1 REV., DO MALFUNCTION PROCEDURES AND TRY AGAIN AT THE NEXT OPPORTUNITY. NO CAPABILITY IS LOST SLIPPING 1 REV, BECAUSE THE LANDING TIME REMAINS THE SAME FOR ONLY ABOUT A 50 FPS INCREASE IN TEI DELTA V.

DATA SOURCES

ONBOARD MONITORING

RETURN TO EARTH DISPLAYS

FDO ORBIT DIGITALS

CHECKOUT MONITOR

PARTICIPATION

CREW

FDO

RFO

FD

PROCEDURE

A. NO SPS OR DPS IGNITION

1. RETARGET TEI FOR 1 REV. LATER

2. CREW EXECUTE STANDARD MALFUNCTION PROCEDURES

B. PREMATURE SPS SHUTDOWN

1. CREW RESTART ASAP AND COMPLETE THE TARGETED BURN WITH NO TRIM

2. TRIM X AND Z IF SHUTDOWN RESIDUALS LESS THAN 5 FPS.

C. PREMATURE DPS SHUTDOWN WITH OPERATIONAL SPS AS BACKUP.

1. MODE III REGION

(A) RETARGET SPS FOR NEXT TEI

2. MODE I REGION

(A) RETARGET SPS FOR TEI + 2 HR.

4 SLV SYSTEMS

R	ITEM
--	-----

6-1 S-IC STAGE LOSS OF THRUST

THE S-IC STAGE ENGINE START SEQUENCE USUALLY BEGINS AT TB1 - 8.9 SECONDS AND SHOULD ATTAIN 90 PERCENT THRUST PRIOR TO LIFTOFF. NOMINAL TIME FOR INBOARD ENGINE CUTOFF IS TB1 + 134.6 SECONDS-- OUTBOARD ENGINES AT TB2 + 28.8 SECONDS. TWO ENGINE OUT AUTO ABORT IS DEACTIVATED AT TB1 + 120 SECONDS. FOR EARLY ENGINE OUT (APPROX. 20 SECONDS) HIGH-Q WILL OCCUR 25 TO 30 SECONDS LATER THAN NOMINAL CONDITIONS.

FAILURE POINTS

1. LOX OR FUEL PREVALVE CLOSES PREMATURELY
2. PREMATURE ENERGIZATION OF ENGINE CONTROL SOLENOID
3. GAS GENERATOR CONTROL VALVE CLOSES PREMATURELY
4. FUEL CUTOFF SENSOR SENSES PREMATURELY AFTER ARMING
5. BATTERY NO. 1 LOSS OF POWER
6. NO POWER TRANSFER SIGNAL FROM MAIN POWER DISTRIBUTOR
7. SWITCH SELECTOR FAILURE
8. PREMATURE THRUST-NOT-OK SIGNAL
9. PREMATURE ENGINE CUTOFF SIGNAL FROM TIMER DISTRIBUTOR
10. GIMBAL DUCT FAILS
11. SLIDING JOINT FAILS
12. PREMATURE ''TWO ADJACENT OUTBOARD ENGINES OUT'' CUTOFF SIGNAL FROM PROPULSION DISTRIBUTOR

CONSEQUENCES

MALFUNCTIONS OCCURRING AT LIFTOFF OR WHEN THE VEHICLE IS IN THE PAD VICINITY CAN CAUSE PAD FALLBACK. COLLISION WITH HOLDDOWN ARMS OR OTHER PERIPHERAL GROUND EQUIPMENT, OR COLLISION WITH THE LAUNCH TOWER. DUAL ENGINE FAILURES RESULT IN FALLBACK FOR ALL CASES EXAMINED AND FOR ALL FAILURES FROM 0 TO 30 SECONDS. SINGLE ENGINE FAILURES - (ENGINE 1 OR 4 BETWEEN TB1 + 0 SECOND AND TB1 + 3.5 SECONDS - ENGINE 2 OR 3 BETWEEN TB1 + 0 SECOND AND TB1 + 2.0 SECONDS) WILL RESULT IN LOSS OF CONTROL DURING THE INTERVAL TB1 + 133 SECONDS AND TB1 + 151 SECONDS, ALL OTHER SINGLE ENGINE FAILURES ARE CONTROLLABLE. FOR TWO ADJACENT SIDE CONTROL ENGINES FAILED, LOSS OF ROLL CONTROLLABILITY RESULTS. ADJACENT CONTROL ENGINE FAILURES FROM 0 TO 30 SECONDS RESULT IN STRUCTURAL FAILURE BUT TWO OPPOSITE CONTROL ENGINES FAILED ARE LESS SEVERE AND WILL NOT RESULT IN BREAKUP.

CONTINGENCY CONDITION

LOSS OF THRUST - ENGINE 3 OR 4

THIS RULE APPLIES ONLY FOR THE UNIQUE CASE OF ENGINE 3 OR 4 THRUST LOSS BETWEEN 0 TO 45 SECONDS. IT IS AN INFORMATION RULE ONLY AND IS USED TO INFORM THE RANGE SAFETY OFFICER THAT ENGINE 3 OR 4 IS OUT.

FAILURE POINTS (ENGINE 3 OR 4)

1. LOX PREVALVE CLOSES PREMATURELY
2. GAS GENERATOR CONTROL VALVE CLOSES PREMATURELY
3. SWITCH SELECTOR PREMATURE SIGNAL
4. PREMATURE THRUST-NOT-OK SIGNAL
5. PREMATURE ENGINE CUTOFF SIGNAL FROM TIME DISTRIBUTORS

CONSEQUENCES

LOSS OF THRUST ON ENGINE 3 OR 4, UNDER CERTAIN WIND CONDITIONS, MIGHT CAUSE THE VEHICLE TO VIOLATE A RANGE SAFETY DESTRUCT LINE. IN THE EVENT OF ENGINE 3 OR 4 LOSS OF THRUST, THE RANGE SAFETY OFFICER WILL USE AN ALTERNATE DESTRUCT LINE ESPECIALLY FOR THIS UNIQUE CASE.

R	ITEM
	6-2

LOSS OF ATTITUDE CONTROL DURING BOOST PHASE

LOSS OF ATTITUDE CONTROL CAUSES LOSS OF GUIDANCE AND POSSIBLE LOSS OF VEHICLE.

FAILURE POINTS

1.	ST-124 PLATFORM FAILURE	LOSS OF ATTITUDE REFERENCE
2.	LVDC/LVDA FAILURE	LOSS OF ATTITUDE COMMAND OR ATTITUDE ERROR SIGNAL
3.	FLIGHT CONTROL COMPUTER FAILURE	ANGULAR RATE SIGNAL LOST OR SATURATED ATTITUDE ERROR SIGNAL LOST OR SATURATED
4.	SWITCH SELECTOR FAILURE	INADVERTENT SEQUENCING OR INHIBITING OF STAGE COMMAND
5.	CONTROL EDS RATE GYRO FAILURE	LOSS OF ANGULAR RATE SIGNALS
6.	CONTROL SIGNAL PROCESSOR	LOSS OF ANGULAR RATE SIGNALS

CONSEQUENCES

A. S-IC BURN

TOWER COLLISION CAN OCCUR AT LIFTOFF. DURING HIGH-Q REGION, RAPID DIVERGENCE WILL OCCUR WITH POSSIBLE LOSS OF THE CREW. IN THE POST HIGH-Q REGION, THESE FAILURES WILL CAUSE EITHER HIGH RATES OR DIVERGENCE FROM THE NOMINAL FLIGHT PATH WITH NO STRUCTURAL BREAKUP OR LOSS OF CREW.

B. S-II BURN

THESE FAILURES WILL RESULT IN EITHER HIGH RATES OR DIVERGENCE FROM THE NOMINAL FLIGHT PATH WITH NO STRUCTURAL BREAKUP OR LOSS OF CREW.

C. S-IVB BURN

EFFECTS ARE THE SAME AS FOR S-II BURN.

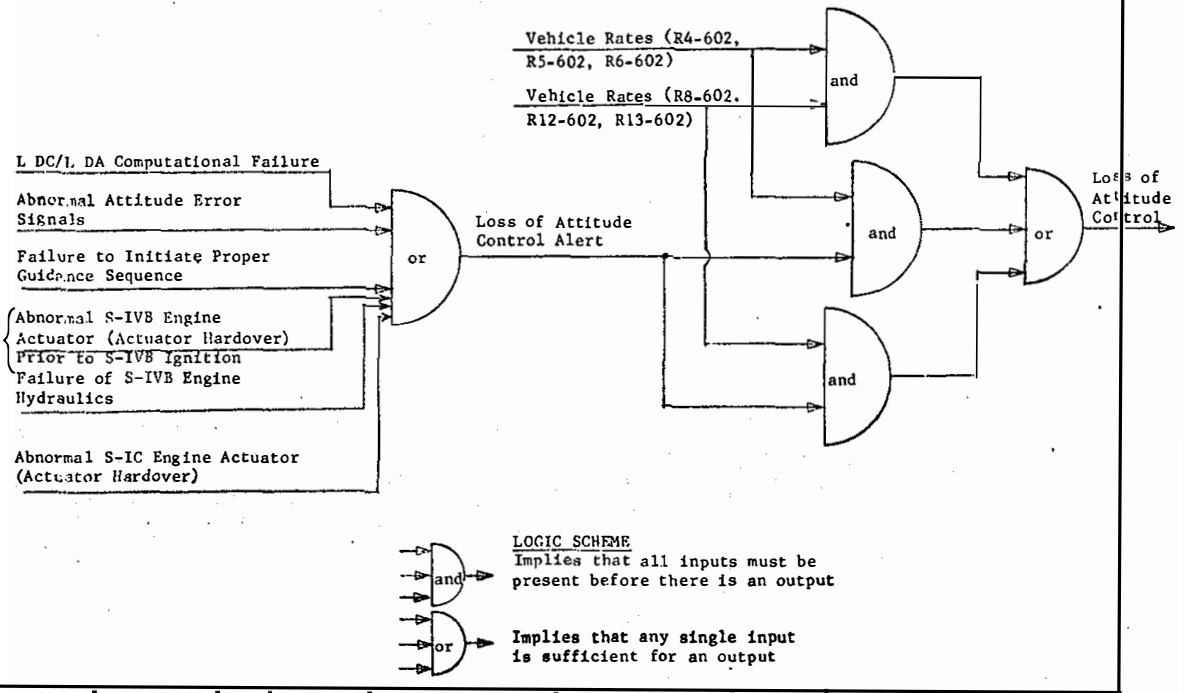

R	ITEM

Loss of Attitude Control Alert

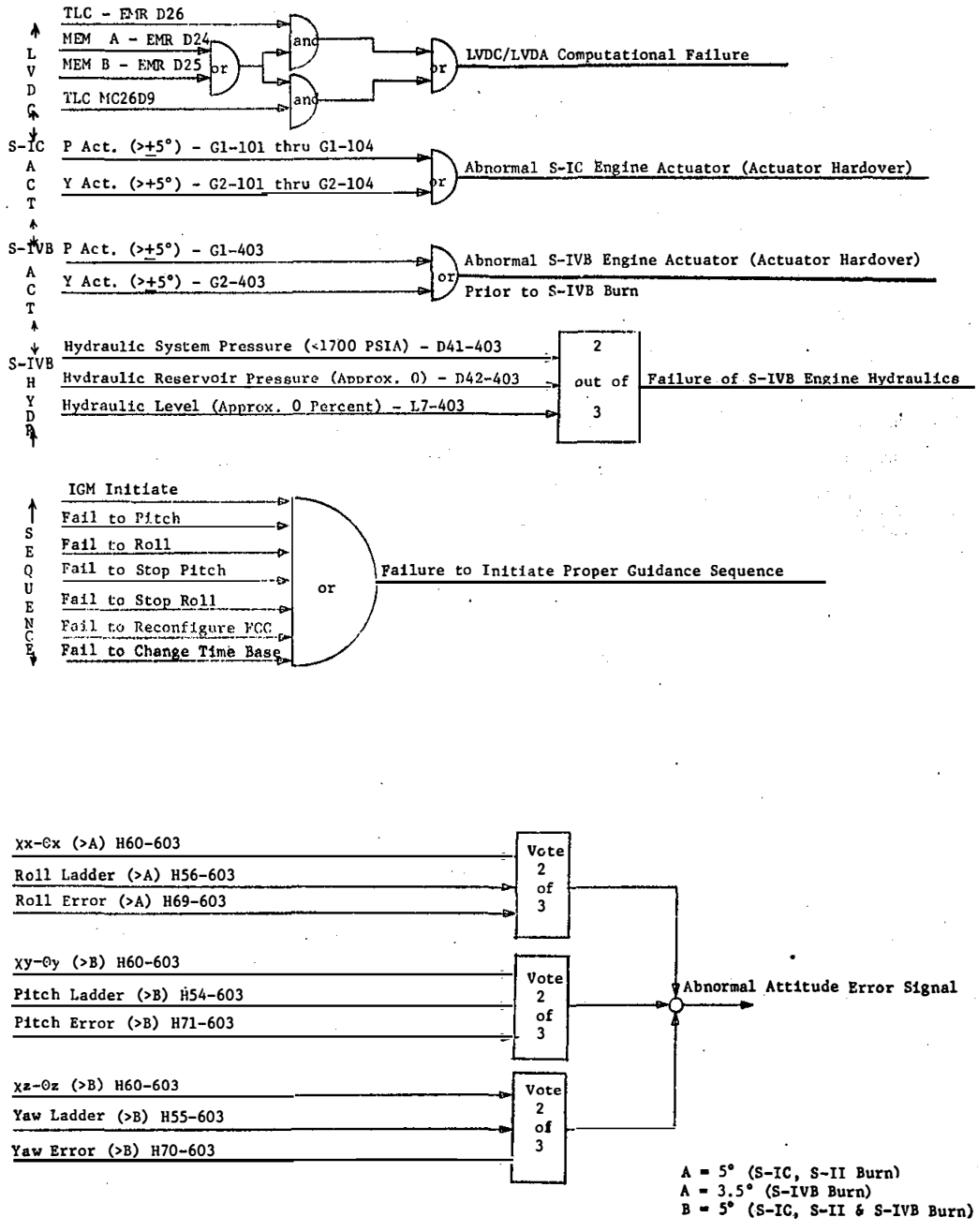

R	ITEM
	6-3

L.V. PLATFORM FAILURE - ACCELEROMETER

THREE PENDULOUS INTEGRATING GYRO ACCELEROMETERS ARE MOUNTED ON THE INNER GIMBAL OF THE ST-124 AND ORIENTED SUCH THAT EACH INPUT AXIS IS ALIGNED WITH THE RESPECTIVE X, Y, AND Z AXES (THRUST, CROSSRANGE AND DOWNRANGE AXES AT LIFTOFF) OF THE VEHICLE. EACH ACCELEROMETER IS USED TO CONVERT DYNAMIC ACCELERATION ALONG ITS INPUT AXIS TO A PRECESSION ABOUT ITS RESPECTIVE OUTPUT AXIS. THIS PRECESSION, MONITORED BY AN OPTICAL ENCODER, IS PROPORTIONAL TO THE INTEGRAL OF ACCELERATION AND PROVIDES VELOCITY INFORMATION TO THE LVDA. SIGNAL GENERATOR PICKOFFS FOR EACH AXIS MEASURES THE PRECESSION ANGLE AND PROVIDES A NULL SIGNAL TO THE ACCELEROMETER TORQUE MOTORS.

FAILURE POINTS

FAILURE OF THE FOLLOWING RESULTS IN ZERO OR ERRONEOUS OUTPUT AND CONSTITUTES A LOSS OF PERTINENT VELOCITY DATA REQUIRING SWITCHING TO ALTERNATE CHANNEL OR TO FAILURE BACKUP INFORMATION.

1. ENCODER FAILURE
2. ACCELEROMETER FAILURE
3. PLATFORM AC POWER SUPPLY FAILURE
4. ACCELEROMETER SERVO LOOP FAILURE
5. GN2 BEARING SUPPLY FAILURE

CONSEQUENCES

ACCELEROMETER FAILURE IN ONE OR MORE AXES WILL RESULT IN THE VEHICLE ACHIEVING A DEGRADED ORBIT. FAILURE WILL HAVE NO EFFECT ON VEHICLE TRAJECTORY DURING S-IC BURN. FAILURE IN ANY AXIS WILL RESULT IN UTLILIZING PRESTORED F/M PROFILE DATA FOR THE FAILED AXIS IN THE GUIDANCE COMPUTATION. AN LVDC NAVIGATION UPDATE MAY BE REQUIRED TO PROPERLY INITIATE TB6 AND FOR ACCEPTABLE TLI BURN NAVIGATION.

R	ITEM
	6-4

L.V. INERTIAL PLATFORM ATTITUDE REFERENCE FAILURE

THE ATTITUDE OF THE VEHICLE IS MEASURED IN THE PLATFORM INERTIAL COORDIANTE SYSTEM USING DUAL SPEED RESOLVERS (FINE AND BACKUP GIMBAL ANGLES) FOR EACH OF THE THREE AXES. THE RESOLVERS MOUNTED ON THE GIMBAL PIVOT POINTS OUTPUT A PHASE SHIFTED SIGNAL WHICH IS PROPORTIONAL TO THE DIFFERENCE IN POSITION BETWEEN THE VEHICLE BODY AND THE SPACE FIXED REFERENCE.

FAILURE POINTS

FAILURE IN ANY OF THE FOLLOWING AREAS RESULTS IN A ZERO OR ERRONEOUS GIMBAL ANGLE READINGS AND WILL REQUIRE BACKUP MODE OF OPERATION.

1. GYRO FAILURE
2. RESOLVER FAILURE
3. POWER SUPPLY FAILURE
4. GN2 BEARING SUPPLY FAILURE
5. GIMBAL SERVO LOOP FAILURE

CONSEQUENCES

FAILURE OF THE ST-124 INERTIAL PLATFORM ATTITUDE REFERENCE SYSTEM IN ONE OR MORE AXES WILL CAUSE A FAILURE OF THE GIMBAL ANGLE REASONABLENESS TEST. THE ATTITUDE ERROR COMMANDS FOR THE FAILED AXIS WILL BE FROZEN AT THE LAST PREFAILURE VALVE BY THE FLIGHT PROGRAM DUE TO THE FAILURE OF THE GIMBAL ANGLE REASONABLENESS TEST. THE GIMBAL ANGLE REASONABLENESS TEST FAILURE WILL INDICATE A GUIDANCE REFERENCE FAILURE BY SETTING D4 AND D6 (MODE CODE 26 BIT D8 SET TO "ONE") AND ENABLE CIRCUITRY FOR SPACECRAFT GUIDANCE CONTROL OF THE LAUNCH VEHICLE. THE CREW SHOULD INITIATE SPACECRAFT GUIDANCE CONTROL WHEN ONBOARD DISPLAYS INDICATE A LAUNCH VEHICLE GUIDANCE REFERENCE FAILURE.

A FAILURE DURING LAUNCH PHASE WILL RESULT IN THE FOLLOWING CONDITIONS IF SPACECRAFT GUIDANCE CONTROL IS NOT INITIATED---

S-IC BURN - ATTITUDE RATES WILL INCREASE AND EXCEED THE EDS AUTO ABORT LIMITS IN HIGH-Q REGION.

S-II BURN AND S-IVB BURN PRIOR TO LAST 50 SECONDS OF FLIGHT - ATTITUDE ERROR WILL INCREASE AND THE VEHICLE WILL FAIL TO ACHIEVE A SATISFACTORY ORBIT.

S-IVB BURN DURING LAST 50 SECONDS OF FLIGHT - VEHICLE MAY BE INSERTED INTO PARKING ORBIT BUT WILL ULTIMATELY ABORT DUE TO TUMBLE. NOMINAL S-IVB CUTOFF WILL NOT BE ACHIEVED FOR A FAILURE PRIOR TO ENTRY OF THE HIGH SPEED LOOP FOR THE ASCENT TO ORBIT AND OUT OF ORBIT PHASES OF THE MISSION.

ORBITAL COAST PHASE - VEHICLE DRIFT RATES OF +/- 0.2 DEGREE/SECOND IN PITCH AND YAW AND +/- 0.5 DEGREE/SECOND IN ROLL MAY BE EXPERIENCED, ASSUMING AN OPERATIONAL S-IVB APS.

SECOND S-IVB BURN PRIOR TO ENTRANCE OF THE HIGH SPEED LOOP - THE ERRONEOUS GIMBAL ANGLE VALUES MAY CAUSE THE NAVIGATION CALCULATIONS TO DIVERGE FROM THE END CONDITIONS, PREVENTING THE (F/M) C ACCELERATION PROFILE FROM BEING RESOLVED. FAILURE TO RESOLVE THE ACCELERATION PROFILE WILL RESULT IN THE ABILITY TO ENTER THE HIGH SPEED LOOP AND THE VEHICLE FAILURE TO ACHIEVE PROPER TLI.

SECOND S-IVB BURN AFTER ENTRANCE OF THE HIGH SPEED LOOP - THIS FAILURE HAS NO MAJOR EFFECT ON NOMINAL TLI PARAMETERS.

SPACECRAFT GUIDANCE CONTROL SHOULD BE IMPLEMENTED BY THE CREW ANY TIME THE ATTITUDE REFERENCE FAILURE OCCURS BETWEEN LIFTOFF AND NOMINAL SPACECRAFT SEPARATION. IF A GUIDANCE REFERENCE FAILURE AND AN S-IC ENGINE FAILURE OCCUR BETWEEN LIFTOFF AND LIFTOFF PLUS 50 SECONDS, THE CREW SHOULD ABORT IF THE CREW ABORT LIMITS ARE EXCEEDED DURING MAX-Q TO PRECLUDE LAUNCH VEHICLE STRUCTURAL BREAKUP. STRUCTURAL BREAKUP WILL OCCUR BECAUSE THE SPACECRAFT GUIDANCE SCHEME DOES NOT INCLUDE AN ENGINE OUT CAPABILITY.

R	ITEM

6-6 EXCESSIVE ATTITUDE ERROR IN PITCH OR YAW DURING S-II BURN

EXCESSIVE ATTITUDE ERROR IN PITCH OR YAW DURING THE S-II BURN CAN CAUSE FIDO LIMIT LINES TO BE CROSSED IN S-II OR S-IVB FLIGHT, OR POSSIBLE LOSS OF PLATFORM IF FAILURE IS IN THE YAW PLANE.

FAILURE POINTS

1. IU FLIGHT CONTROL COMPUTER, S-II PITCH ERROR AMPLIFIER OR FILTER

2. IU FLIGHT CONTROL COMPUTER, S-II YAW ATTITUDE ERROR AMPLIFIER OR FILTER

CONSEQUENCES

A FEW FAILURES OF THE PITCH OR YAW ATTITUDE ERROR AMPLIFIERS OR FILTERS WILL RESULT IN A ZERO SIGNAL TO THE PITCH OR YAW SERVO AMPLIFIERS. THE PITCH OR YAW ACTUATORS WILL NOT RESPOND TO THE COMMAND. THE ATTITUDE ERROR WILL BUILD UP UNTIL AN ABORT LIMIT IS REACHED OR UNTIL S-IVB STAGING. AFTER STAGING TO S-IVB, THE RESULTS OF THE FAILURE WILL BE ELIMINATED DUE TO THE CHANGE IN FILTER AND THE ADDITION OF A TRIPLE REDUNDANT CIRCUIT.

6-7 S-II STAGE LOSS OF THRUST

THE S-II STAGE ENGINE START SEQUENCE USUALLY BEGINS AT TB3 + 1.4 SECONDS AND SHOULD ATTAIN 90 PERCENT THRUST BY TB3 + 5 SECONDS. THE S-II DEPLETION CUTOFF CIRCUITY IS THE PRIMARY SIGNAL FOR S-II ENGINES CUTOFF. THE CIRCUITRY IS ENABLED AT TB3 + 5 MINUTES 55.0 SECONDS WITH NOMINAL CUTOFF OCCURRING AT TB3 + 6 MINUTES 34.1 SECONDS.

FAILURE POINTS

1. SWITCH SELECTOR FAILURE

2. LOX PREVALVES FAIL CLOSED

3. LH2 PREVALVES FAIL TO OPEN PRIOR TO ESC

4. LOX OR LH2 VENT VALVES FAIL OPEN

5. LOSS OF ENGINE READY OR START SIGNAL

6. LOSS OF MAIN BATTERY POWER

7. LOX OR LH2 TANK PRESSURE REGULATOR REGULATES LOW

8. LOX OR LH2 FILL AND DRAIN VALVES FAIL TO REMAIN CLOSED

9. PREMATURE ENGINE CUTOFF SIGNAL FROM ECA

CONSEQUENCES

LOSS OF THRUST ON A SINGLE ENGINE DOES NOT CAUSE LOSS OF CONTROL. PARKING ORBIT INSERTION IS POSSIBLE FOR ANY SINGLE ENGINE OUT ANY TIME IN S-II FLIGHT. WITH ONE ENGINE OUT AT OR LATER THAN TB3 PLUS 2 MIN. 1 SEC., THE SPACE VEHICLE HAS A 50 PERCENT PROBABILITY OF ACCOMPLISHING TLI.

TLI CAPABILITY IS LOST FOR --- (A) LOSS OF THRUST OCCURS ON THE CENTER ENGINE PRIOR TO TB3 PLUS 1 MIN. 56 SEC., (B) LOSS OF THRUST ON AN UPPER ENGINE PRIOR TO TB3 PLUS 2 MIN 31 SEC., (C) LOSS OF THRUST ON A LOWER ENGINE PRIOR TO TB3 PLUS 2 MIN 36 SEC.

LOSS OF THRUST OF S-II ADJACENT ENGINES INDICATES A DECREASE OF CONTROL AUTHORITY FROM PREVIOUS VEHICLES. THE DECREASE IS CAUSED BY THE CG BEING CLOSER TO THE ENGINE GIMBAL PLANE. SMALLER MOMENTS THUS RESULT WHEN THE CONTROL ENGINES ARE DEFLECTED TO COMPENSATE FOR THE MOMENT CAUSED BY LOSS OF THRUST. S-II DUAL ADJACENT ENGINE FAILURES RESULT IN LOSS OF CONTROL FOR EARLY FAILURES. TLI CAPABILITY FOR THESE CASES IS LOST PRIOR TO TB3 PLUS 4 MIN 40 SEC. EARLY STAGING CAN BE SUCCESSFULLY ACCOMPLISHED AS EARLY AS 3 MIN 1 SEC FOR THE TWO ENGINE OUT CASES, IF SAFE EDS LV SEPARATION RATES ARE NOT EXCEEDED. NO LOSS OF CONTROL OCCURS FOR A SINGLE S-IC ENGINE OUT FOLLOWED BY A SINGLE S-II ENGINE OUT.

R	ITEM
--	-----

6-8 S-II GIMBAL SYSTEM FAILURE (SINGLE ACTUATOR HARDOVER - INBOARD)

THE S-II HYDRAULIC SYSTEM PROVIDES ATTITUDE CONTROL BY GIMBALLING ONE OR MORE OF THE FOUR OUTBOARD ENGINES DURING POWERED FLIGHT. THE SYSTEM CONSISTS OF FOUR INDEPENDENT, CLOSED-LOOP, HYDRAULIC CONTROL SUBSYSTEMS, WHICH PROVIDE POWER FOR GIMBALLING. ELECTRO-HYDRAULIC ACTUATORS, MOUNTED IN PERPENDICULAR PLANES, FURNISH GIMBAL FORCES BY EXTENDING OR RETRACTING SIMULTANEOUSLY OR INDIVIDUALLY IN ACCORDANCE WITH ELECTRICAL INPUT SIGNALS. THE PRIMARY COMPONENTS ARE THE MAIN HYDRAULIC PUMP, AUXILIARY PUMP, AUXILIARY PUMP ELECTRIC MOTOR, ACCUMULATOR RESERVOIR MANIFOLD ASSEMBLY, AND TWO SERVOACTUATORS.

FAILURE POINTS

1. FAILURE OF SERVOACTUATOR

2. FAILURE OF ELECTRICAL CABLE ASSEMBLY

3. ERRONEOUS INPUT SIGNAL

CONSEQUENCES

IF A HARDOVER INBOARD ACTUATOR FAILURE OCCURS, THE FIRST EXPECTED STAGE DAMAGE WOULD BE BURN-THROUGH OF THE FLEXIBLE CURTAIN PORTION OF THE BASE HEAT SHIELD. PRIOR TO S-II INBOARD ENGINE CUTOFF, S-II STAGE DAMAGE WOULD OCCUR WITHIN 15 TO 20 SECONDS AFTER ACTUATOR FAILURE. AFTER S-II INBOARD ENGINE CUTOFF, S-II STAGE DAMAGE WOULD OCCUR WITHIN 25 TO 30 SECONDS AFTER ACTUATOR FAILURE. POTENTIAL CONSEQUENCES ARE FAILURE OF AN ENGINE ELECTRICAL CONTROL PACKAGE WITH SUBSEQUENT LOSS OF THRUST AND OTHER UNDETERMINABLE EFFECTS, COLLAPSE OF THE THRUST STRUCTURE DUE TO INDUCED THERMAL STRESSES AND LOSS OF ENGINE THRUST, AND/OR LOSS OF S-II/SIVB SEPARATION COMMAND CAPABILITY DUE TO WIRING HARNESS DAMAGE.

R	ITEM
	6-9

S-II SECOND PLANE SEPARATION FAILS TO OCCUR

THE S-II AFT INTERSTAGE NORMALLY SEPARATES AT TB3 + 30.7 SECONDS.

FAILURE POINTS

1. FAILURE OF ELECTRICAL CABLE ASSEMBLY 200W1
2. FAILURE OF ELECTRICAL CABLE ASSEMBLY 206A7W4
3. FAILURE OF ELECTRICAL CABLE ASSEMBLY 206W14
4. LSC SEPARATION ASSEMBLY FAILURE
5. INADEQUATE OUTPUT OF S-IC/S-II SECOND PLANE SEPARATION TRIGGER
6. INADEQUATE OUTPUT OF S-IC/S-II ORDNANCE ARM
7. SWITCH SELECTOR FAILURE

CONSEQUENCES

SUBSEQUENT LOSS OF VEHICLE DUE TO EXCESSIVE TEMPERATURES. FAILURE TO JETTISON THE S-IC/S-II INTERSTAGE WILL LEAD TO EXCEEDING THE THERMAL ENVIRONMENT LIMITS IN THE S-II BOATTAIL AREA WITH CROSS BEAM AND/OR OTHER STRUCTURAL FAILURE DUE TO HEAT FLOW AROUND THRUST CURTAIN FROM IMPINGEMENT ON INTERSTAGE. EXCESSIVE TEMPERATURES ARE EXPECTED APPROXIMATELY 66 SECONDS AFTER S-IC OBECO (APPROXIMATELY 35.3 SECONDS AFTER NORMAL INTERSTAGE JETTISON).

R	ITEM	
	6-10	S-IVB LOSS OF ENGINE HYDRAULIC FLUID

THE INDEPENDENT, CLOSED-LOOP S-IVB HYDRAULIC SYSTEM GIMBALS THE J-2 ENGINE DURING BOOST, COAST, AND ENGINE BURN OPERATIONS. A MAIN HYDRAULIC PUMP, AN AUXILIARY MOTOR-DRIVEN HYDRAULIC PUMP, AN ACCUMULATOR-RESERVOIR, TWO SERVOACTUATORS, AND INTERCONNECTING TUBE AND HOSE ASSEMBLIES COMPRISE THE S-IVB HYDRAULIC SYSTEM. EACH OF TWO IDENTICAL SERVOACTUATOR ASSEMBLIES PROVIDES MECHANICAL FORCE TO GIMBAL THE J-2 ENGINE. THE SERVO VALVE WITHIN EACH ACTUATOR DIVERTS FLUID TO ONE SIDE OR THE OTHER OF THE ACTUATOR PISTONS IN ACCORDANCE WITH SIGNALS RECEIVED BY THE SERVO VALVE TORQUE MOTOR FROM THE FLIGHT CONTROL COMPUTER IN THE IU.

FAILURE POINTS

1. PITCH OR YAW ACTUATOR MALFUNCTION
2. MAIN HYDRAULIC PUMP FAILURE
3. HYDRAULIC HOSE OR TUBING FAILURE
4. AUXILIARY MOTOR-DRIVEN HYDRAULIC PUMP FAILURE

CONSEQUENCES

IGNITION OF THE S-IVB STAGE WITHOUT AN OPERATIVE HYDRAULIC SYSTEM WILL JEOPARDIZE CREW SAFETY. THERE WILL BE A LOSS OF ENGINE GIMBAL CONTROL DURING MAINSTAGE OPERATION, WHICH PROBABLY WILL RESULT IN EXCESSIVE VEHICLE ATTITUDE RATES AND GUIDANCE ERROR. IN THE CASE WHERE THE AUXILIARY HYDRAULIC PUMP ALONE FAILS (DETECTED BY A LOSS OF SYSTEM PRESSURE AND A RISE IN RESERVOIR LEVEL TO A VALUE GREATER THAN 50 PERCENT), IT IS FELT THAT THIS WOULD NOT SERIOUSLY AFFECT SYSTEM OPERATION. THE MAIN ENGINE-DRIVEN PUMP WILL DEVELOP SOON ENOUGH DURING MAINSTAGE IGNITION TO MAINTAIN HYDRAULIC PRESSURE REQUIRED FOR FLIGHT CONTROL DURING S-IVB BURN.

R	ITEM

6-11 S-IVB STAGE LOSS OF THRUST

THE S-IVB SHOULD ATTAIN 90 PERCENT THRUST BY TB4 + 6.5 SECONDS. APPROXIMATELY 148.4 SECONDS OF S-IVB BURN IS REQUIRED TO REACH A 75 NAUTICAL MILE PERIGEE WITH NOMINAL S-IC AND S-II PERFORMANCE. S-IVB ENGINE CUTOFF IS SCHEDULED TO OCCUR AT TB4 + 2 MINUTES 27.7 SECONDS FROM A VELOCITY CUTOFF FOR A FIRST BURN DURATION OF 146.7 SECONDS. FOR SECOND BURN, THE S-IVB SHOULD ATTAIN 90 PERCENT BY TB6 + 9 MINUTES 40.4 SECONDS. LENGTH OF THE S-IVB SECOND BURN IS 363.2 SECONDS.

FAILURE POINTS

1. FUEL TANK PRESSURIZATION CONTROL MODULE LEAKS EXTERNALLY
2. LH2 TANK VENT AND RELIEF VALVE LEAKS OR FAILS TO REMAIN CLOSED
3. PREVALVE FAILS CLOSED
4. CONTINUOUS VENT CONTROL MODULE FAILURE
5. AMBIENT CONTROL HELIUM FILL MODULE FAILURE
6. INADEQUATE THERMAL CONDITIONING
7. MAIN OXIDIZER OR FUEL VALVE FAILS CLOSED
8. OXIDIZER TURBINE BYPASS VALVE FAILURE
9. ASI OR ASI VALVE FAILURE
10. START TANK DISCHARGE VALVE FAILURE
11. MAINSTAGE CONTROL MODULE FAILURE
12. PREMATURE THRUST-NOT-OK SIGNAL

CONSEQUENCES

J-2 ENGINE FAILURES WHICH CAUSE THE S-IVB TO FAIL TO ATTAIN THRUST WILL PRODUCE THE SAME EFFECT AS TOTAL LOSS OF THRUST BUT WILL CAUSE NO STRUCTURAL BREAKUP DUE TO THE LACK OF AERODYNAMIC FORCES. SUBSEQUENT ATTITUDE CONTROL CAN BE MAINTAINED BY THE APS. A PERTURBED ORBIT CAN BE ACHIEVED FOR LOSS OF THRUST DURING THE LAST 2 SECONDS OF S-IVB FIRST BURN. ORBITAL INSERTION MAY BE ACCOMPLISHED WITH SPS BURN FOLLOWING GET OF 8 MINUTES 37 SECONDS. FOR SECOND BURN, IF THE S-IVB STAGE FAILS TO ATTAIN THRUST, THERE WILL BE NO RESTART AND LOSS OF A MISSION OBJECTIVE. IF THE S-IVB LOSES THRUST AFTER MAINSTAGE OK, TLI OBJECTIVES WILL BE LOST.

R	ITEM

6-12 S-IVB COLD HELIUM SHUTOFF VALVE(S) FAIL OPEN

THE LOX TANK IS PREPRESSURIZED PRIOR TO LIFTOFF TO 38 TO 41 PSIA BY A COLD HELIUM FLOW FROM GSE. HELIUM FLOW IS CONTROLLED BY THE NORMALLY CLOSED COLD HELIUM SHUTOFF VALVES. THE FLIGHT CONTROL PRESSURE SWITCH (SENSING TANK ULLAGE PRESSURE) CONTROLS PREPRESSURIZATION BY OPENING AND CLOSING THE COLD HELIUM SHUTOFF VALVES. THE COLD HELIUM SHUTOFF VALVES CAN BE CLOSED BY FOUR SIGNALS---SWITCH SELECTOR COMMAND-LOX TANK FLIGHT CONTROL PRESSURE SWITCH, ACTIVATION OF LOX TANK REGULATOR BACKUP PRESSURE SWITCH, AND ESE COMMAND. THESE SIGNALS APPLY POWER TO A SET OF MOMENTARY CONTACTS THAT OPEN AND REMOVE POWER FROM THE SOLENOID OPERATED SHUTOFF VALVES AND ALLOW THEM TO CLOSE. THE ABSENCE OF ALL OF THE SIGNALS WILL ALLOW THE MOMENTARY CONTACTS TO RETURN TO THEIR NORMALLY CLOSED POSITION, APPLYING POWER TO OPEN THE SHUTOFF VALVES. DURING BOOST THE LOX TANK PRESSURIZATION SHUTOFF VALVES CLOSED COMMAND IS SENT 6 SECONDS AFTER LIFTOFF TO DISABLE SWITCH CONTROL OVER THE SHUTOFF VALVES. THE COMMAND WILL BE REMOVED PRIOR TO ESC TO ALLOW SUFFICIENT TIME FOR ANY REQUIRED BOOST MAKEUP PRESSURIZATION WITHOUT DANGER OF VENT FREEZING.

FAILURE POINTS

1. COLD HELIUM SHUTOFF VALVES FAIL OPEN

2. MOMENTARY CONTACT FAILS IN THE NORMALLY CLOSE POSITION

CONSEQUENCES

IF THE SHUTOFF VALVES FAIL OPEN DURING BOOST, THE LOX TANK ULLAGE PRESSURE WILL RISE TO THE VENT RELIEF SETTING AND THE HELIUM FLOW WILL BE VENTED OVERBOARD. THIS MAY RESULT IN INSUFFICIENT HELIUM REMAINING FOR ADEQUATE PRESSURIZATION OF THE LOX TANK DURING BURNS. IN ADDITION, THERE IS A POSSIBILITY THAT AFTER A TRANSIENT PERIOD OF PRESSURIZATION SYSTEM CHILLDOWN, THE COLD HELIUM FLOW COULD FREEZE OXYGEN IN THE VENT SYSTEM AND CAUSE A BLOCKAGE OF THE PILOT POPPETS IN THE LOX TANK VENT AND RELIEF VALVES. THE LOX TANK ULLAGE PRESSURE COULD THEN RISE PAST THE RELIEF SETTING TO A POTENTIALLY HAZARDOUS LEVEL.

7-1 PRIOR TO RESTART, INSUFFICIENT PROPELLANT REMAINS FOR ACHIEVEMENT OF ACCEPTABLE ALTERNATE MISSIONS

S-IVB ENGINE FIRST BURN VELOCITY CUTOFF IS SCHEDULED TO OCCUR AT TB4 + 2 MINUTES 27.7 SECONDS GIVING A FIRST BURN DURATION OF 146.7 SECONDS. S-IVB ENGINE SECOND BURN WILL INJECT THE LAUNCH VEHICLE AND SPACECRAFT INTO AN ACCEPTABLE LUNAR TRAJECTORY BY A GUIDANCE VELOCITY CUTOFF.

THE RESIDUAL PROPELLENT REMAINING AT TLI CUTOFF OR THE 105,000 NM APOGEE IS DEFINED BY REALTIME ANAYSIS CONSIDERING THE FIRST S-IVB BURN CHARACTERISTICS (THRUST,FLOW RATE, BURNTIME, ETC.). SUFFICIANT PROPELLENT IS DEFINED SUCH THAT THE PROPELLENT EVALUATION IN REAL TIME WILL INDICATE A ONE PERCENT (-2.330) PROBABILITY OF ACHEIVING A 105.000 NM APOGEE AT CUTOFF. THIS PROBABILITY IS BASED ON PERFORMANCE CAPABILITY ONLY. AND IF THERE ARE HARDWARE FAILURES DURING THE MISSION, CONSIDERATION WILL BE GIVEN AS TO THE EFFECT OF THE FAILURE ON PERFORMANCE

FAILURE POINTS

ANY FAILURE WHICH RESULTS IN REDUCED PROPELLENTS FOR SIVB SECOND BURN

CONSEQUENCES

IF ADDITIONAL PROPELLANT IS USED DURING AN EXTENDED S-IVB FIRST BURN OR IS LOST DURING EARTH ORBITAL COAST BECAUSE OF A MALFUNCTION PRIOR TO SECOND BURN, IT IS POSSIBLE THERE WILL NOT BE ENOUGH PROPELLANT TO PERFORM A GUIDANCE VELOCITY CUTOFF AT TLI. IF SUFFICIENT PROPELLANT DOES NOT REMAIN, THE STAGE WILL BE CUT OFF BY A DEPLETION CUTOFF CAUSING THE LAUNCH VEHICLE AND SPACECRAFT TO BE INJECTED INTO AN EXTREMELY OFF-NOMINAL LUNAR TRAJECTORY.

R	ITEM

7-2 LOSS OF ONE APS MODULE DURING TB5, TB6 PRIOR TO RESTART, OR TB7

THE APS PROVIDES ATTITUDE CONTROL OF THE S-IVB IN THE ROLL AXIS DURING J-2 ENGINE BURN AND IN ALL THREE AXES DURING COAST FLIGHT. THE APS ENGINES ARE LOCATED IN TWO MODULES 180 DEGREES APART ON THE AFT SKIRT OF THE S-IVB. EACH MODULE CONTAINS FOUR ENGINES--- THREE 150 POUND THRUST ENGINES AND ONE 70 POUND THRUST ENGINE--AND CONTAINS ITS OWN OXIDIZER, FUEL, AND PRESSURIZATION SYSTEM THAT UTILIZES NITROGEN TETROXIDE AS THE OXIDIZER AND MONOMETHYL HYDRAZINE AS THE FUEL. THE 150-POUND THRUST ENGINES UTILIZE EIGHT CONTROL VALVES (FOUR FOR FUEL, FOUR FOR OXIDIZER) IN A FAIL-SAFE, SERIES-PARALLEL ARRANGEMENT. THE ENGINE FIRING COMMANDS, WHICH COME FROM THE IU, ACTUATE THE QUAD-REDUNDANT ENGINE VALVES, ALLOWING THE PROPELLANT TO FLOW INTO THE THRUST CHAMBER. NO IGNITION SYSTEM IS REQUIRED, SINCE THE FUEL AND OXIDIZER ARE HYPERGOLIC. AN ABLATIVE MATERIAL IN THE THROAT OF THE NOZZLE ABSORBS HEAT AND SLOWLY BURNS AWAY DURING MOTOR OPERATION, THEREBY COOLING THE MOTOR.

FAILURE POINTS

1. PROPELLANT SYSTEM LEAK

2. HIGH AND LOW HELIUM SYSTEM LEAK

3. EXCESSIVE USAGE OF PROPELLANT OR HELIUM DUE TO COMMANDS

CONSEQUENCES

LOSS OF ONE APS MODULE DURING S-IVB COAST PERIODS WILL RESULT IN THE LOSS OF ATTITUDE CONTROL OF THE VEHICLE UNLESS ACTION IS TAKEN TO REMOVE PITCH AND YAW CONTROL FROM THE APS MODULES. BY GROUND COMMANDING ''S-IVB BURN MODE A AND B ON'', APS PITCH AND YAW CONTROL COMMANDS WILL BE SENT TO THE S-IVB J-2 ENGINE GIMBAL SYSTEM. BY COMMANDING 'FCC POWER OFF A AND B.' POWER TO THE IU FLIGHT COMPUTOER IS TURNED OFF, WHICH ASSURES REMOVAL OF ALL CONTROL SIGNALS TO THE APS MODULES. DURING COAST PERIODS, THE CREW WOULD CONTROL THE VEHICLE IN PITCH AND YAW WITH THE CSM RCS. DURING S-IVB SECOND BURN, THE S-IVB GIMBAL SYSTEM CAN MAINTAIN PITCH AND YAW CONTROL. ONE OPERATIVE APS MODULE CAN MAINTAIN ROLL CONTROL DURING S-IVB BURN. LOSS OF EITHER APS MODULE PRIOR TO OR DURING PROPELLANT DUMP MAY RESULT IN LOSS OF ATTITUDE CONTROL AND FAILURE TO MAINTAIN PROPER LUNAR IMPACT ATTITUDE.

R	ITEM
	7-3

J-2 ENGINE MAIN FUEL VALVE FAILS TO CLOSE

THE MAIN FUEL VALVE IS A BUTTERFLY-TYPE VALVE, SPRING LOADED TO THE CLOSED POSITION, PNEUMATICALLY OPERATED TO THE OPEN POSITION, AND PNEUMATICALLY ASSISTED TO THE CLOSED POSITION. THE PURPOSE OF THIS VALVE IS TO CONTROL THE FLOW OF FUEL TO THE THRUST CHAMBER. THE MFV IS CLOSED DURING THE ENGINE CUTOFF SEQUENCE BY DEENERGIZING THE IGNITION PHASE CONTROL VALVE WHICH ROUTES HELIUM CONTROL SYSTEM PRESSURE THROUGH THE NORMALLY OPEN PORT TO THE CLOSING ACTUATOR OF THE MFV. OPENING CONTROL PRESSURE FROM THE MFV IS VENTED THROUGH THE NORMALLY CLOSED PORT OF THE IGNITION PHASE CONTROL VALVE. THE VALVE IS SPRING LOADED TO THE CLOSED POSITION AND STARTS TO CLOSE AS SOON AS OPENING PRESSURE IS VENTED.

FAILURE POINTS

1. LOSS OF ENGINE CONTROL PNEUMATICS

2. MAIN FUEL VALVE FAILS OPEN

3. MAIN IGNITION PHASE SOLENOID AND MAIN HELIUM CONTROL SOLENOID FAIL OPEN

CONSEQUENCES

IF THE MAIN LH2 VALVE FAILS TO CLOSE AT FIRST BURN CUTOFF AND CANNOT BE COMMANDED CLOSED, LH2 WILL BE DUMPED OVERBOARD AND WILL RESULT IN PROPULSIVE VENTING DURING ORBITAL COAST. LOSS OF FUEL COULD JEOPARDIZE THE MISSION BECAUSE OF INADEQUATE PROPELLANT REMAINING FOR A NOMINAL TLI CUTOFF. THE COMMAND ACTION AFTER FIRST BURN SHOULD BE TO CLOSE THE N. O. (NORMALLY OPEN) FUEL PREVALVE AND RECIRCULATION SHUTOFF VALVES TO CONTAIN THE FUEL. THE LH2 FEED HARDWARE AND ENGINE CHILLDOWN WILL BE ACCOMPLISHED BY THE ONBOARD SEQUENCED 18.6-SECOND FUEL LEAD WHICH STARTS WHEN THE PREVALVES ARE OPENED. NO LOX HARDWARE CHILLDOWN WILL BE ACCOMPLISHED AND IS CONSIDERED SATISFACTORY FOR A SAFE ENGINE START. AN LH2 LEAD EXCEEDING 18.6 SECONDS IS CONSIDERED AS UNDESIRABLE BECAUSE THE ENGINE WILL BE OVERCHILLED AND WILL EXPERIENCE A HARD START AND PROBABLY EXPERIENCE COMBUSTION INSTABILITY.

THE LOX AND LH2 PREVALVES AND RECIRCULATION SHUTOFF VALVES ARE CLOSED AT TLI CUTOFF BY AN ONBOARD SEQUENCE. FOR A MAIN LH2 VALVE FAILURE TO CLOSE, THERE WILL BE A SIMULATANEOUS LH2 AND LOX DUMP AT THE TIME OF LOX DUMP INITIATION.

R	ITEM	
	7-4	J-2 ENGINE MAIN OXIDIZER VALVE FAILS TO CLOSE

THE MAIN LOX VLAVE IS A BUTTERFLY-TYPE VALVE, SPRING LOADED TO THE CLOSED POSITION, PNEUMATICALLY OPERATED TO THE OPEN POSITION, AND PNEUMATICALLY ASSISTED TO THE CLOSED POSITION. THE PURPOSE OF THIS VALVE IS TO CONTROL THE FLOW OF OXIDIZER TO THE THRUST CHAMBER. THE MOV IS CLOSED DURING THE ENGINE CUTOFF SEQUENCE BY DEENERGIZING THE MAINSTAGE CONTROL VALVE WHICH ROUTES HELIUM CONTROL SYSTEM PRESSURE THROUGH THE NORMALLY OPEN PORT TO THE CLOSING ACTUATOR OF THE MOV. OPENING CONTROL PRESSURE FROM THE MOV IS VENTED THROUGH THE NORMALLY CLOSED PORT OF THE MAINSTAGE CONTROL VALVE. THE VALVE IS SPRING LOADED TO THE CLOSED POSITION AND STARTS TO CLOSE AS SOON AS OPENING PRESSURE IS VENTED.

FAILURE POINTS

1. LOSS OF ENGINE CONTROL PNEUMATICS
2. MAIN LOX VALVE FAILS OPEN
3. MAINSTAGE CONTROL SOLENOID AND THE HELIUM CONTROL SOLENOID FAILS OPEN

CONSEQUENCES

IF THE MAIN LOX VALVE FAILS TO CLOSE AFTER A BURN PERIOD, THERE WILL BE SEVERE ENGINE DAMAGE BECAUSE OF A HIGH MIXTURE RATIO AT CUTOFF. THERE WILL BE A LOSS OF LOX OVERBOARD. DURING ORBITAL COAST, LOX WILL BE DUMPED THROUGH THE J-2 ENGINE AND WILL RESULT IN PROPULSIVE VENTING IF THE PREVALVE AND RECIRCULATION VALVE ARE NOT CLOSED. A SECOND BURN SHOULD NOT BE ATTEMPTED WITH THIS FAILURE BECAUSE ENGINE DAMAGE RESULTING FROM THE FIRST BURN LOX-RICH CUTOFF CANNOT BE ASSESSED IN REAL TIME.

R	ITEM
	7-5

FAILURE TO SAFE THE RANGE SAFETY RECEIVERS AFTER INSERTION

THE RANGE SAFETY SYSTEM IS THE SYSTEM WHICH PERMITS THE RANGE SAFETY OFFICER TO DESTROY THE VEHICLE IF IT BECOMES A SAFETY HAZARD DURING POWERED FLIGHT. THE SYSTEM IS SAFED UPON ORBIT INSERTION BY GROUND COMMAND FROM THE RANGE SAFETY OFFICER (RSO). THE SAFE COMMAND DISARMS THE SYSTEM BY REMOVING POWER FROM THE DECODER AND EBW FIRING UNIT.

FAILURE POINTS

1. CONTROLLER ASSEMBLY FAILURE

2. DECODER FAILURE

3. RELAY FAILURE

CONSEQUENCES

FAILURE TO SAFE THE RANGE SAFETY RECEIVERS AFTER INSERTION WITH THE PROPELLANT DISPERSION SYSTEM NOT ARMED DOES NOT POSE A PROBLEM. IT IS DESIRABLE TO HAVE THE RANGE SAFETY RECEIVERS DISABLED. INADVERTENT ARMING OF THE PROPELLANT DISPERSION SYSTEM (EBW FIRING UNITS) IS A POTENTIALLY EXPLOSIVE SITUATION. SHOULD THIS CONDITION EXIST, IMMEDIATE ACTION SHOULD BE TAKEN TO SEPARATE THE SPACECRAFT TO A SAFE DISTANCE. IF THE PROPELLANT DISPERSION SYSTEM IS INADVERTENTLY ARMED, ATTEMPTS TO SAFE SYSTEM SHOULD NOT BE MADE UNTIL THE SPACECRAFT IS AT A SAFE DISTANCE.

R	ITEM

7-6 S-IVB COLD HELIUM SHUTOFF VALVES FAIL TO CLOSE

AT S-IVB ENGINE SHUTDOWN (TB5 AND TB7), THE COLD HELIUM SHUTOFF VALVES ARE CLOSED TO TERMINATE PRESSURIZATION HELIUM FLOW TO THE LOX TANK BY THE SWITCH SELECTOR COMMANDS "LOX TANK FLIGHT PRESSURE SYSTEM OFF" AND "LOX TANK PRESSURIZATION SHUTOFF VALVES CLOSE ON" AND STAY CLOSED UNTIL ENGINE RESTART PREPARATIONS (TB6) PLUS 9 MINUTES 38.4 SECONDS. THIS PROVIDES SUFFICIENT NPSH FOR SAFE ENGINE RESTART AND IS USED TO PRESSURIZE THE LOX TANK DURING MAINSTAGE OPERATION.

FAILURE POINTS

1. SWITCH SELECTOR FAILURE
2. MAGLATCH RELAY FAILS TO SET
3. DIODE FAILS OPEN
4. RELAY FAILS TO ACTUATE
5. COLD HELIUM SHUTOFF VALVES FAIL OPEN

CONSEQUENCES

FAILURE OF THE COLD HELIUM VALVES TO CLOSE COULD RESULT IN UNCONTROLLED COLD HELIUM FLOW INTO THE LOX TANK. FAILURE TO DISABLE THE LOX TANK PRESSURIZATION SYSTEM OR OF A LOX VENT TO OPEN COULD LEAD TO AN EXCESSIVE DELTA P LOAD ON THE S-IVB COMMON BULKHEAD. FAILURE TO CLOSE THE SHUTOFF VALVES WILL RESULT IN THE TOTAL DEPLETION OF COLD HELIUM AND LOSS OF SECOND BURN TLI CAPABILITY BECAUSE THE LOX TANK ULLAGE PRESSURE COULD NOT BE MAINTAINED AT A LEVEL SUFFICIENT TO PROVIDE THE REQUIRED J-2 ENGINE LOX NPSH DURING SECOND BURN. THE PARTIAL LOSS OF COLD HELIUM COULD MEAN INSUFFICIENT GAS AVAILABLE FOR LOX AND/OR LH2 TANK BURNER REPRESSURIZATION PRIOR TO S-IVB RESTART AND THE USE OF THE AMBIENT REPRESSURIZATION SYSTEM WOULD BE REQUIRED.

R	ITEM

7-7 S-IVB AUXILIARY HYDRAULIC PUMP FAILS

THE ELECTRICALLY DRIVEN, VARIABLE DELIVERY, FIXED ANGLE, CONSTANT DISPLACEMENT PUMP SUPPLIES OPERATING PRESSURE HYDRAULIC FLUID FOR PREFLIGHT ENGINE GIMBALLING CHECKOUTS, NULL POSITIONING DURING BOOST PHASE, AND FLUID CIRCULATION TO MAINTAIN DESIRED TEMPERATURE DURING BOOST AND COAST PHASE.

FAILURE POINTS

A. FAILURE TO TURN ON

1. SWITCH SELECTOR FAILURE
2. FAILURE OF MAGLATCH RELAY TO SET
3. LOSS OF SEQUENCER POWER
4. FAILURE OF RELAY TO ACTUATE
5. AFT BATTERY NO. 2 DEPLETED
6. FAILURE OF HPU MOTOR-DRIVEN SWITCH TO TURN ON
7. FAILED PUMP OR MOTOR
8. FROZEN PUMP SUCTION LINES

B. FAILURE TO TURN OFF

1. SWITCH SELECTOR FAILURE
2. MAGLATCH RELAY FAILS TO RESET
3. FAILURE OF GROUND CONTROL RELAY TO REMAIN DEACTUATED
4. FAILURE OF RELAY TO DEACTUATE
5. LOSS OF AFT BUS NO. 1
6. FAILURE OF HPU MOTOR-DRIVEN SWITCH TO TURN OFF

CONSEQUENCES

A. FAILURE TO TURN OFF

FAILURE TO TURN OFF THE HYDRAULIC PUMP WILL DEPLETE AFT NO. 2 BATTERY IN APPROXIMATELY 90 MINUTES AND OVERHEAT THE SYSTEM IN 70 MINUTES, WHICH MEANS A PARTIAL LOSS OF HYDRAULIC FLUID. AN INCREASE IN HYDRAULIC TEMPERATURE CAUSES AN INCREASE IN FLUID VOLUME, AND IF THE PUMP IS SUCCESSFULLY TURNED OFF, ANY FLUID VOLUME GREATER THAN THE RESERVOIR CAPACITY WILL BE VENTED OVERBOARD.

B. FAILURE TO TURN ON

FAILURE OF THE HYDRAULIC PUMP TO TURN ON DURING THE THERMAL CYCLE PRIOR TO RESTART COULD LEAD TO FREEZING OF THE HYDRAULIC OIL AND FAILURE OF THE MAIN HYDRAULIC PUMP AT RESTART. FOR A LOSS PRIOR TO ENGINE RESTART THERE WILL BE NO SYSTEM PRESSURE TO FILL THE ACCUMULATOR AND CENTER THE ENGINE. THIS COULD DELAY TIME FOR EFFECTIVE GUIDANCE CONTROL DURING RESTART, HOWEVER, ATTITUDE CONTROL WOULD NOT SERIOUSLY BE AFFECTED DURING THE STARTING TRANSIENT SINCE FULL HYDRAULIC SYSTEM PRESSURE WOULD BE DEVELOPED BY THE MAIN (ENGINE-DRIVEN) PUMP BY THE TIME THE ENGINE IS UP TO 90 PERCENT THRUST. FOR THE CASE DURING TB6, THE PUMP OFF COMMAND SHOULD BE SENT (ASAP) TO PRECLUDE THE POSSIBILITY OF PUMP START WHILE THE CHILLDOWN PUMPS ARE OPERATING, BECAUSE THE INRUSH SURGE CURRENT MIGHT POSSIBLY DAMAGE THE INVERTER CURCUIT. FOR LOSS OF THE PUMP PRIOR TO PASSIVATION, THERE WILL BE NO SYSTEM PRESSURE TO CENTER THE ENGINE. THIS WILL RESULT IN LOSS OF THRUST VECTOR CONTROL.

WHEN FLUID IS NOT CIRCULATED, C50-403 AND C51-403 WILL REVERT TO A LOCALIZED TEMPERATURE, WITH C50-403 AT A HIGHER TEMPERATURE DUE TO ITS LOCATION NEAR THE LOX TURBINE. DURING CIRCULATION THE SYSTEM TEMPERATURES WILL CONVERGE.

R	ITEM	
	7-7 CONT	

C. AUXILIARY HYDRAULIC PUMP IS---

ON WHEN	OFF WHEN
D41-403 GREATER THAN 1700 PSIA	D41-403 LESS THAN 1700 PSIA
L7-403 LESS THAN 50 PERCENT	L7-403 GREATER THAN 50 PERCENT
M22-404 GREATER THAN 20 AMPS	M22-404 APPROXIMATELY ZERO AMPS
D42-403 GREATER THAN 137 PSIA	D42-403 LESS THAN 89 PSIA

R	ITEM

7-8 LOSS OF ATTITUDE CONTROL

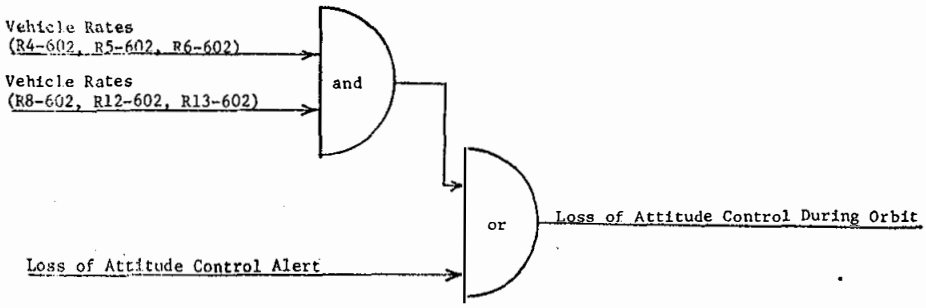

ATTITUDE CONTROL OF THE ENTIRE SATURN VEHICLE IS CONTROLLED THROUGH THE INSTRUMENT UNIT. THIS CONTROL IS NECESSARY TO KEEP THE VEHICLE IN THE CORRECT LAUNCH TRAJECTORY FOR PROPER ORBIT INSERTION AND FOR MAINTAINING THE CORRECT VEHICLE ATTITUDE WHILE IN ORBIT.

FAILURE POINTS

1. SWITCH SELECTOR FAILURE
2. LVDC FAILURE
3. ST-124 PLATFORM FAILURE
4. APS FAILURE

CONSEQUENCES

LOSS OF ATTITUDE CONTROL DURING ORBIT WILL EVENTUALLY RESULT IN EXCESSIVE RATES IN THE AFFECTED AXIS AND AN INABILITY TO PERFORM REQUIRED MANEUVERS. THE LV/CSM ATTITUDE WILL BE UNCONTROLLABLE AND WILL DIVERGE.

R	ITEM
	7-8 CONT.

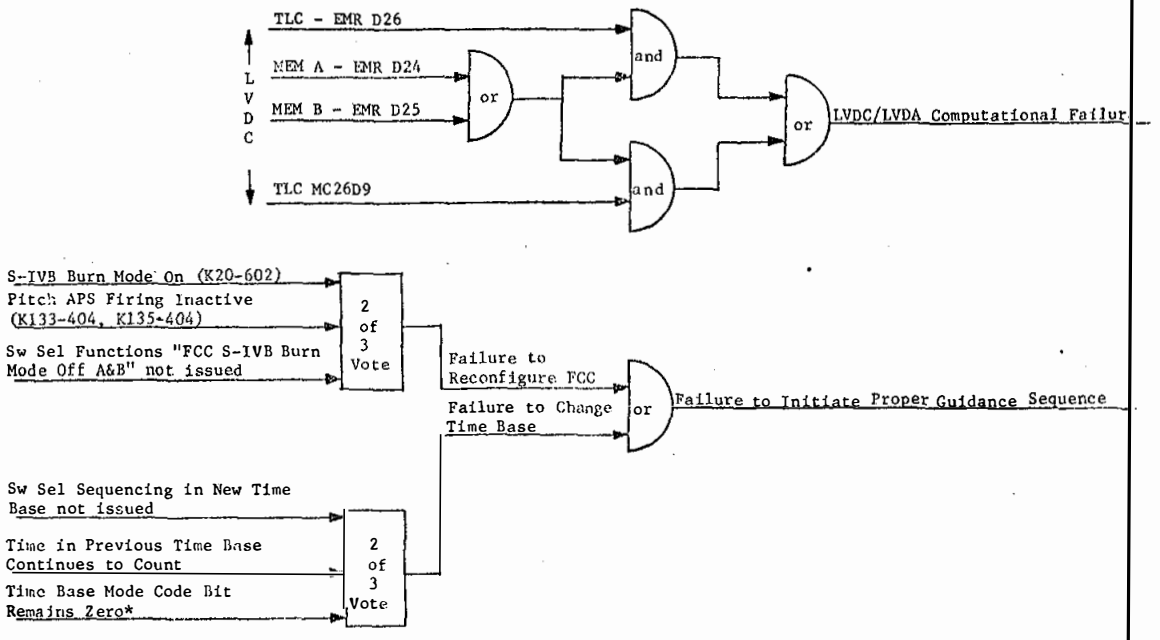

* MC25D2 Zero Indicates Not in TB5
MC25D1 Zero Indicates Not in TB6

Loss of Attitude Control Alert During Orbit

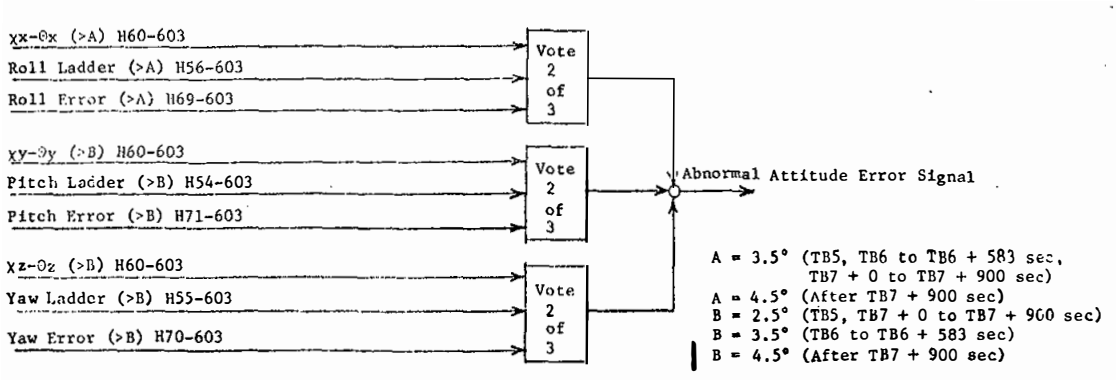

R	ITEM
	7-9

CONTINUOUS VENT SYSTEM REGULATOR FAILS TO OPEN

THE CONTINUOUS VENT SYSTEM PROVIDES FOR LH2 TANK VENTING DURING COAST TO ASSIST IN PROPELLANT SETTLING AND THERMAL CONDITIONING BY PREVENTING THE BULK TEMPERATURE FROM INCREASING. THIS HELPS TO ENSURE PROPER CONDITIONS FOR ENGINE RESTART.

FAILURE POINTS

1. SWITCH SELECTOR FAILURE
2. SEQUENCE FAILS TO INITIATE LH2 CONTINUOUS VENT SHUTOFF VALVE OPEN
3. 10 AMP MAGLATCH RELAY FAILS
4. ACTUATION CONTROL MODULE (LH2 CONTINUOUS VENT SHUTOFF VALVE) FAILS TO OPEN

CONSEQUENCES

IF THE REGULATOR (CONTINUOUS VENT RELIEF VALVE) FAILS TO OPEN AND THE ORIFICE (CONTINUOUS VENT ORIFICE SHUTOFF VALVE) DOES OPEN, PROPELLANT CONTROL WILL BE MAINTAINED BUT THE LIQUID SATURATION TEMPERATURE WILL RISE ABOVE ENGINE RESTART LIMITS. THE HIGH BULK TEMPERATURE WILL CAUSE INADEQUATE NPSH AND THE J-2 ENGINE NPSH REQUIREMENT WILL NOT BE MET THROUGHOUT SECOND BURN. A DEGRADED OFF-NOMINAL BURN WILL RESULT IN A PROBABLE CUTOFF THAT IS CREW SAFE.

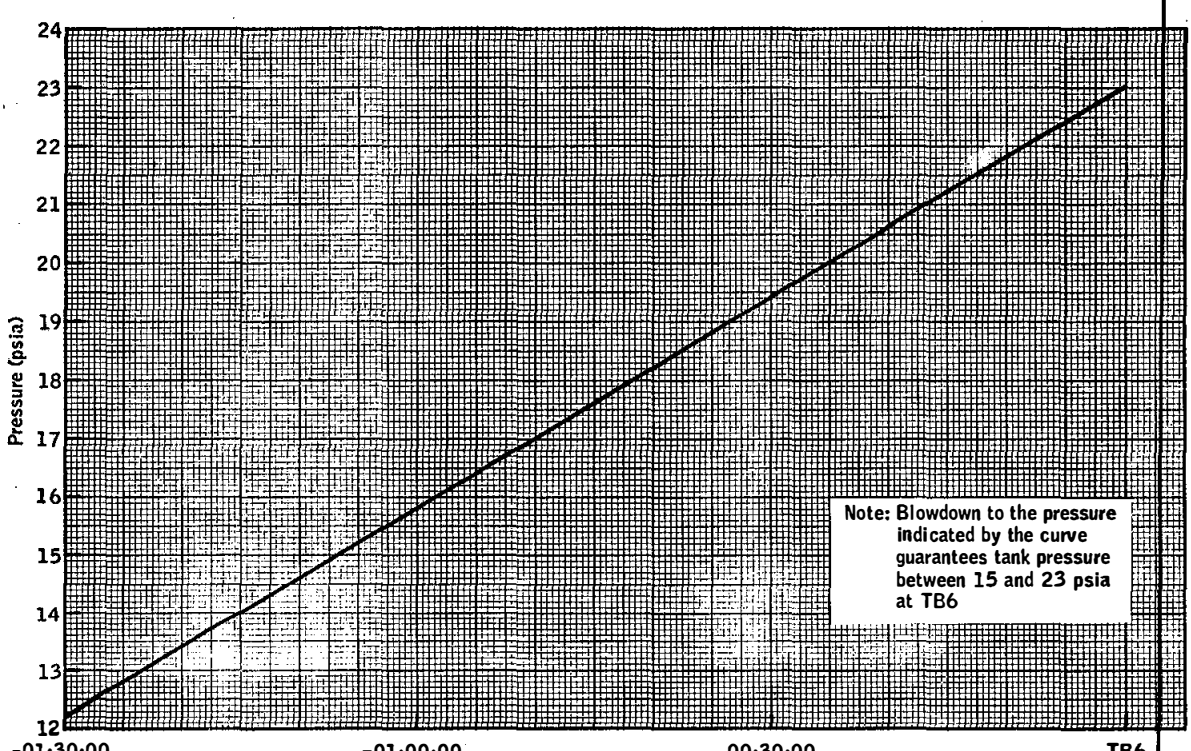

Time from end of blowdown to TB6 (hr:min:sec)

Maximum allowable LH_2 tank ullage pressure following blowdown.

R	ITEM
	7-10

FAILURE TO TERMINATE APS ULLAGE ENGINE(S) THRUST

THE ULLAGE ENGINES ARE USED TO PROVIDE A POSITIVE G FORCE TO THE STAGE PRIOR AT SECOND BURN, AND TO PROVIDE PROPELLANT SETTLING DURING TANK VENTING.

FAILURE POINTS

1. SWITCH SELECTOR FAILURE

2. SEQUENCER FAILURE

   A. ULLAGE ENGINE NO. 1 PROPELLANT VALVE(S) FAIL OPEN

   B. ULLAGE ENGINE NO. 2 PROPELLANT VALVE(S) FAIL OPEN

3. MAGLATCH RELAY FAILS TO RESET

CONSEQUENCES

FAILURE TO TERMINATE THE APS ULLAGE ENGINE(S) THRUST WILL RESULT IN DEPLETION OF APS PROPELLANTS IN A MATTER OF MINUTES. THE DEPLETION OF APS PROPELLANTS WILL CAUSE LOSS OF ATTITUDE CONTROL. APS PROPELLANT IS DEPLETED SOONER FOR THE SINGLE APS ULLAGE ENGINE ''ON'' DUE TO THE REQUIREMENT TO BURN THE PITCH ENGINE IN THE SAME MODULE TO MAINTAIN ATTITUDE CONTROL.

R	ITEM
	7-11

IU STATE VECTOR DIFFERS FROM THE MSFN STATE VECTOR BY 6 SIGMA IU ERRORS AND CVS UNCERTAINTIES AND IS CONFIRMED BY A COMPARISON OF IMU TO MSFN.

THE ALLOWABLE MIDCOURSE SHOULD BE THE NORMALLY ALLOTTED LAUNCH VEHICLE 3 SIGMA IU ERRORS PLUS SOME PERCENTAGE OF THE SPS END OF MISSION RESERVES.

FAILURE POINTS

1. LVDC/LVDA FAILURE

2. ACCELEROMETER FAILURE

CONSEQUENCES

THESE FAILURES COULD AFFECT THE SUCCESSFUL ACHIEVEMENT OF THE PRIMARY MISSION OBJECTIVES. IF THE IU STATE VECTOR, AS COMPARED TO A CORRESPONDING RADAR (MSFN) VECTOR, EXCEEDS THE VALUES OF 6 SIGMA IU PLATFORM ERRORS, AND IS CONFIRMED AS TO TREND BY A SPACECRAFT (IMU) VECTOR COMPARISON WITH MSFN, THEN THE IU SHOULD BE CORRECTED TO MAKE THE PRIMARY MISSION.

R	ITEM
	7-13

IU ECS WATER VALVE FAILS TO CYCLE OPEN AND CLOSED

THE ENVIRONMENT CONTROL SUBSYSTEM (ECS) MAINTAINS ACCEPTABLE THERMAL OPERATING CONDITIONS FOR IU AND S-IVB ELECTRICAL COMPONENTS DURING PREFLIGHT AND FLIGHT OPERATIONS. THE ECS CIRCULATES COOLANT TO THE ELECTRICAL EQUIPMENT RACKS AND ABSORBS HEAT GENERATED BY THE EQUIPMENT. THE COOLANT IS COOLED BY CIRCULATION THROUGH A SUBLIMATOR THAT USES WATER TO COOL THE COOLANT SOLUTION. THE ECS WATER VALVE CONTROLS WATER FLOW TO THE SUBLIMATOR. FAILURE OF THE VALVE IN THE CLOSED POSITION WILL RESULT IN OVERHEATING AND A FAILURE IN THE OPEN POSITION WILL RESULT IN OVERCOOLING OF THE ELECTRICAL COMPONENTS.

FAILURE POINTS

1. ELECTRICAL FAILURE TO SOLENOID

2. VALVE FAILURE

3. THERMISTOR FAILURE

CONSEQUENCES

IF THE ENVIRONMENTAL CONTROL SYSTEM LOGIC FAILS TO CYCLE THE WATER VALVE OPEN AND CLOSED PROPERLY, OVERHEATING OR OVERCOOLING OF IU COMPONENTS WILL RESULT. HOWEVER, SENDING THE ECS LOGIC INHIBIT COMMAND AND WATER VALVE OPEN OR CLOSED COMMAND, AS THE CASE MAY BE, MAY REMEDY THE FAILURE. IF THIS IS UNSUCCESSFUL, THE FOLLOWING WILL RESULT---

OVERHEATING - THE ST-127 INERTIAL PLATFORM AND THE LVDA'S TWO POWER SUPPLY TEMPERATURES WILL INCREASE BUT WILL NOT REACH THEIR UNACCEPTABLE TEMPERATURES BY THE END OF THE 7-HOUR MISSION FOR THE LAUNCH VEHICLE. THE LVDC MEMORY TEMPERATURE WILL REACH ITS UNACCEPTABLE TEMPERATURE OF 123.8 DEGREE F AT APPROXIMATELY 4.3 HOURS AFTER FAILURE.FOR THE 7-HOUR LAUNCH VEHICLE MISSION, THERE WILL BE NEGLIGIBLE DEGRADATION OF THE LAUNCH VEHICLE NAVIGATION AND GUIDANCE SYSTEM DUE TO THE TEMPERATURE INCREASE OF THE ST-124 INERTIAL PLATFORM. HOWEVER, ASSUMING A CRITICAL PORTION OF MEMORY IS LOST DUE TO LVDC MEMORY OVERHEATING, THE LVDC MAY NOT BE ABLE TO SATISFACTORILY PERFORM ITS NAVIGATION, GUIDANCE AND SEQUENCING FUNCTIONS.

OVERCOOLING - THE ST-124 INERTIAL PLATFORM, LVDC MEMORY, AND THE LVDA'S TWO POWER SUPPLY TEMPERATURES WILL DECREASE BUT WILL NOT REACH THEIR UNACCEPTABLE TEMPERATURES BY THE END OF THE 7-HOUR MISSION FOR THE LAUNCH VEHICLE. THERE WILL BE NEGLIGIBLE DEGRADATION OF THE LAUNCH VEHICLE NAVIGATION AND GUIDANCE SYSTEM DUE TO OVERCOOLING FOR THE 7-HOUR PRIMARY MISSION.

R	ITEM
	7-14

S-IVB STAGE COMMON BULKHEAD DELTA PRESSURE REACHES OR EXCEEDS---

A. MINUS 20 PSID B. PLUS 30 PSID C. MINUS 26 PSID--PLUS 36 PSID

THE COMMON BULKHEAD WILL STRUCTURALLY FAIL AT THE ULTIMATE LIMITS OF MINUS 32.5 PSID OR PLUS 42.0 PSID IF CORRECTIVE ACTION IS NOT TAKEN. PLUS DELTA PRESSURE IS DEFINED AS LOX TANK ULLAGE PRESSURE GREATER THAN THE FUEL TANK ULLAGE PRESSURE. MINUS DELTA PRESSURE IS DEFINED AS A FUEL TANK ULLAGE PRESSURE GREATER THAN THE LOX TANK ULLAGE PRESSURE.

FAILURE POINTS

1. LH2 PRESSURIZATION VALVE(S) FAILING OPEN - (HIGH LH2 ULLAGE PRESSURE)
2. LH2 PRESSURIZATION VALVE(S) FAILING CLOSED - (LOW LH2 ULLAGE PRESSURE)
3. COLD HELIUM SHUTOFF VALVE(S) FAILS CLOSED - (LOW LOX ULLAGE PRESSURE)
4. COLD HELIUM SHUTOFF VALVE(S) FAILS OPEN - (HIGH LOX ULLAGE PRESSURE)
5. LH2 VENT VALVE FAILS CLOSED - (HIGH LH2 ULLAGE)
6. LH2 VENT VALVE FAILS OPEN - (LOW LH2 ULLAGE)
7. LOX VENT VALVE FAILS OPEN - (LOW LOX ULLAGE)
8. LOX VENT VALVE FAILS CLOSED - (HIGH LOX ULLAGE)

CONSEQUENCES

THEORETICALLY, THESE LIMITS SHOULD NOT BE REACHED DURING S-IVB BURN. IF A VENT VALVE FAILS OPEN, PRESSURE WILL DROP TO SATURATION LEVELS AND REMAIN UNTIL ENGINE START. UNDER NORMAL CONDITIONS THE LOX TANK ULLAGE PRESSURE WILL BE APPROXIMATELY 7 PSI HIGHER THAN THE LH2 TANK ULLAGE PRESSURE. SHOULD A FAILURE OCCUR IN THE LH2 OR LOX PRESSURIZATION SYSTEM OR SHOULD A LOX VENT VALVE FAIL, THE NORMAL CONDITIONS COULD BE CHANGED-- I.E., LH2 TANK PRESSURE HIGHER THAN LOX TANK PRESSURE OR HIGH LOX TANK PRESSURE AND LOW LH2 TANK PRESSURE. DURING THE BOOST PHASE THE S-IVB BURN, NPSH LIMITATIONS WOULD BE EXCEEDED BEFORE BULKHEAD RESTRAINTS ARE JEOPARDIZED.

R	ITEM
	7-15

LOSS OF S-IVB STAGE PNEUMATICS

THE STAGE PNEUMATIC SYSTEM MUST BE MAINTAINED AT A PRESSURE OF 490 PSIA TO PROPERLY ACTUATE PNEUMATIC VALVES AND SUPPLY PURGES.

ENGINE PUMP PURGE FAILS ON

THE ENGINE PUMP PURGE CONTROL-- WHICH IS CONTROLLED BY A PRESSURE SWITCH-- IS OPENED FOR 10 MINUTES FOLLOWING S-IVB ENGINE SHUTDOWN, ALLOWING THE TURBOPUMP SEAL CAVITY AND THE GAS GENERATOR TO BE PURGED OF HAZARDOUS MIXTURE OF LH2 AND LOX. AN AMBIENT HELIUM SUPPLY SHUTOFF VALVE IS LOCATED AFTER THE REGULATOR AND CAN BE CLOSED BY GROUND COMMAND IF THE PURGE CANNOT BE TERMINATED OR A LEAK DEVELOPS DOWNSTREAM OF THE VALVE.

FAILURE POINTS

LOSS OF S-IVB STAGE PNEUMATICS

1. PNEUMATIC REGULATOR FAILS CLOSED
2. AMBIENT HELIUM SHUTOFF VALVE FAILS CLOSED
3. PNEUMATIC REGULATOR BACKUP PRESSURE SWITCH FAILS IN ENERGIZED POSITION
4. LOSS OF PNEUMATIC BOTTLE PRESSURE

ENGINE PURGE CONTROL SOLENOID VALVE FAILS OPEN

1. PRESSURE SWITCH FAILURE
2. SWITCH SELECTOR FAILURE
3. SEQUENCER FAILURE
4. AFT PRESSURE SWITCH POWER FAILURE

CONSEQUENCES

IF THE STAGE PNEUMATICS IS LOST, THE VALVE ACTUATION SEQUENCES AND PURGE SEQUENCES CANNOT BE COMPLETED AS PROGRAMMED OR BY GROUND COMMAND. PRIMARY VALVE ACTUATION SEQUENCES THAT WOULD BE LOST ARE CONTINUOUS VENT SYSTEM AND PROPELLANT TANK VENTS OPERATION AND CONFIGURATION FOR CHILLDOWN.

A REGULATOR DISCHARGE PRESSURE OF AT LEAST 320 PSIA IS REQUIRED TO HOLD THE LOX AND LH2 PREVALVES CLOSED DURING CHILLDOWN.

IF THE ENGINE PUMP PURGE CANNOT BE TERMINATED, THE STAGE PNEUMATIC HELIUM WILL BE DEPLETED AND PNEUMATIC VALVE ACTUATION CAPABILITY WILL BE LOST IN TB7 WHICH WILL RESULT IN AN INABILITY TO MEET THE STAGE SAFING REQUIREMENTS.

R	ITEM

7-17 LOW LH2 TANK ULLAGE PRESSURE

DURING ORBITAL COAST, LH2 ULLAGE PRESSURE IS MAINTAINED BETWEEN 19.5 AND 21.0 PSIA BY HAVING THE CONTINUOUS VENT SYSTEM OPEN. THE CONTINUOUS VENT SYSTEM ALLOWS CONTROLLED VENTING OF THE BOILOFF GH2 FROM THE LH2 TANK. THE VENTING PROVIDES A PROPULSIVE FORCE TO ASSIST IN PROPELLANT SETTLING AND THERMAL CONDITIONING BY PREVENTING THE BULK TEMPERATURE FROM INCREASING. A PRESSURE DROP BELOW 19.5 PSIA IS INDICATIVE OF A CONTINUOUS VENT REGULATOR MALFUNCTION OR A VENT SYSTEM LEAK.

THE LH2 TANK IS PREPRESSURIZED BY THE CRYOGENIC REPRESSURIZATION SYSTEM (O2/H2 BURNER) DURING RESTART PREPARATIONS TO A PRESSURE BETWEEN 28 AND 31 PSIA. THE AMBIENT HELIUM REPRESSURIZATION SYSTEM SERVES AS A BACKUP TO CRYOGENIC REPRESSURIZATION IF CRYOGENIC REPRESSURIZATION IS IMPARED BECAUSE OF TANK LEAKAGE OR A REPRESSURIZATION SYSTEM FAILURE. DURING MAINSTAGE OPERATIONS, THE LH2 TANK IS PRESSURIZED BY GASEOUS HYDROGEN BLEED FROM THE J-2 ENGINE. THE FLIGHT CONTROL PRESSURE SWITCH MAINTAINS THE ULLAGE PRESSURE BETWEEN 28 AND 31 PSIA BY CYCLING VALVES IN THE LH2 TANK PRESSURIZATION CONTROL MODULE.

FAILURE POINTS

1. LH2 VENT AND RELIEF VALVE FAILS OPEN OR PARTIALLY OPEN
2. LH2 LATCHING VENT AND RELIEF VALVE FAILS OPEN OR PARTIALLY OPEN
3. LH2 CONTINUOUS VENT SYSTEM REGULATOR FAILS OPEN OR REGULATES TO A LOW PRESSURE DURING COAST
4. CRYOGENIC AND AMBIENT REPRESSURIZATION FAIL TO INITIATE
5. LH2 TANK CVS REGULATOR FAILS TO CLOSE FOR REPRESSURIZATION

CONSEQUENCES

THE LH2 TANK ULLAGE PRESSURE DURING ORBITAL COAST MUST BE MAINTAINED ABOVE THE REQUIRED LIMIT SO THAT THE REPRESSURIZATION SYSTEMS CAN SUFFICIENTLY INCREASE THE PRESSURE TO ENSURE THE J-2 ENGINE LH2 PUMP WILL NOT CAVITATE DUE TO LOW NPSH. IF THE TANK ULLAGE PRESSURE IS BELOW NPSH REQUIREMENTS AT ENGINE START, THE FUEL PUMP WILL CAVITATE WITH A SUBSEQUENT CREW-SAFE SHUTDOWN. A LOW ULLAGE PRESSURE DURING COAST WOULD ALSO RESULT IN ADDITIONAL PROPELLANT LOSSES DUE TO THE LOWER THAN EXPECTED SATURATION PRESSURE OF THE PROPELLANT. THE O2/H2 BURNER MAY NOT START OR MAY BURN THROUGH IF THE LH2 ULLAGE PRESSURE IS BELOW 17 PSIA, THEREBY MAKING IT NECESSARY TO USE THE BACKUP AMBIENT REPRESSURIZATION SYSTEM TO PROVIDE THE REQUIRED NPSH FOR ENGINE START. IF THE BURNER DOES OPERATE AND THE ULLAGE PRESSURE IS LOW BECAUSE OF LEAKAGE, THE EFFECTIVENESS OF CRYOGENIC REPRESSURIZATION WILL BE IMPAIRED AND AMBIENT REPRESSURIZATION WILL ALSO BE REQUIRED. IF THE OVERBOARD LEAKAGE IS GREAT ENOUGH, THE ULLAGE PRESSURE INCREASE FROM AMBIENT REPRESSURIZATION WILL NOT BE SUFFICIENT.

R	ITEM

7-18 LOW COLD HELIUM SUPPLY PRESSURE

DURING RESTART PREPARATIONS, COLD HELIUM HEATED BY THE O2/H2 BURNER IS USED TO PRESSURIZE THE LH2 AND LOX TANKS TO THE PROPER RESTART PRESSURES. FOLLOWING BURNER OPERATION, AMBIENT HELIUM IS USED TO PRESSURIZE THE TANKS IF THE BURNER SYSTEM WAS NOT SUFFICIENT. COLD HELIUM IS ALSO USED DURING S-IVB ENGINE BURN TO PRESSURIZE THE LOX TANK.

FAILURE POINTS

1. COLD HELIUM DUMP MODULE (VENT AND/OR RELIEF) FAILS OPEN

2. LOX TANK PRESSURIZATION SHUTOFF VALVES FAIL OPEN

3. REPRESSURIZATION PLENUM AND VALVE ASSEMBLY (LOX AND/OR LH2) SOLENOID FAILS OPEN

CONSEQUENCES

IF THE COLD HELIUM SPHERE PRESSURE DECREASES BELOW 1000 PSIA PRIOR TO O2/H2 BURNER IGNITION, THERE WILL NOT BE ENOUGH COLD HELIUM REMAINING AFTER LOX AND LH2 TANK CRYOGENIC REPRESSURIZATION TO PRESSURIZE THE LOX TANK DURING BURN TO MEET THE J-2 SPEC NPSH. VIOLATION OF LOX J-2 ENGINE SPEC NPSH WILL CAUSE CAVITATION OF THE LOX TURBOPUMP WITH FAILURE TO START OR ENGINE PERFORMANCE DEGRADATION WITH A CREW-SAFE SHUTDOWN. IF THE COLD HELIUM PRESSURE IS BELOW 300 PSIA, THERE MAY NOT BE SUFFICIENT COLD HELIUM FOR LOX TANK PRESSURIZATION DURING THE BURN. IF THE BURNER IS ALLOWED TO CONTINUE TO OPERATE AFTER THE COLD HELIUM PRESSURE DECREASES BELOW 450 PSIA, THERE MAY NOT BE SUFFICIENT COLD HELIUM FOR LOX TANK PRESSURIZATION DURING THE BURN.

R	ITEM	
	7-19	LOW LOX TANK ULLAGE PRESSURE

THE LOX TANK IS PREPRESSURIZED BETWEEN 38 PSIA AND 41 PSIA DURING THE RESTART SEQUENCE TO PROVIDE THE LOX HEAD (NPSH) CONDITIONS REQUIRED FOR J-2 ENGINE START. THE O2/H2 BURNER IS USED FOR HEATING COLD HELIUM FOR PREPRESSURIZING THE LOX TANK. AN AMBIENT HELIUM REPRESSURIZATION SYSTEM WILL AUTOMATICALLY PREPRESSURIZE THE LOX TANK SHOULD THE O2/H2 BURNER FAIL OR BE INHIBITED. DURING MAINSTAGE THE LOX TANK PRESSURIZATION IS MAINTAINED BETWEEN 38 AND 41 PSIA BY THE FLIGHT CONTROL PRESSURE SWITCH. PRESSURIZATION GASES DURING MAINSTAGE OPERATION CONSIST OF COLD HELIUM FLOWING THROUGH THE J-2 ENGINE HEAT EXCHANGER.

FAILURE POINTS

1. COLD HELIUM SUPPLY SHUTOFF VALVE FAILS CLOSED
2. LOX TANK VENT AND RELIEF VALVE FAILS OPEN
3. LOX AMBIENT HELIUM REPRESSURIZATION SYSTEM FAILS
4. FLIGHT CONTROL PRESSURE SWITCH FAILS
5. O2/H2 BURNER FAILS

CONSEQUENCES

LOW LOX TANK ULLAGE PRESSURES MAY RESULT IN UNACCEPTABLE ENGINE PERFORMANCE AND/OR PREMATURE CREW-SAFE ENGINE SHUTDOWN DURING SECOND BURN DUE TO CAVITATING HEAD LOSSES. MAXIMUM HELIUM USAGE DURING BURNER REPRESSURIZATION COUPLED WITH LOW LOX TANK PRESSURE WILL USE EXCESS COLD HELIUM SUPPLY SUCH THAT THE NORMAL OVERCONTROL PRESSURIZATION ENERGY RATES CANNOT BE MAINTAINED THROUGHOUT SECOND BURN. UNDER THESE CONDITIONS, THE LOX TANK PRESSURIZATION SYSTEM IS UNABLE TO MAINTAIN A POSITIVE PRESSURE RISE RATE AND, THEREFORE, AN INITIAL TANK PRESSURE IS REQUIRED TO ASSURE COMPLIANCE WITH J-2 ENGINE LOX NPSH REQUIREMENTS THROUGHOUT BURN. IF THE CRYOGENIC REPRESSURIZATION SYSTEM IS INHIBITED, THE AMBIENT REPRESSURIZATION HELIUM WILL BE USED TO BRING THE TANK PRESSURES TO AN ACCEPTABLE LEVEL. LOW ULLAGE PRESSURES AT ESC WILL RESULT IN VIOLATION OF NPSH REQUIREMENT PRIOR TO CUTOFF. THE COMMAND ACTION WILL INHIBIT BURNER OPERATION TO SAVE COLD HELIUM FOR BURN INSTEAD OF CONSUMING IT FOR REPRESSURIZATION.

REQUIRED LOX TANK ULLAGE PRESSURE PRIOR TO BURNER START
FOR VARIOUS ULLAGE PRESSURE DECAY RATES

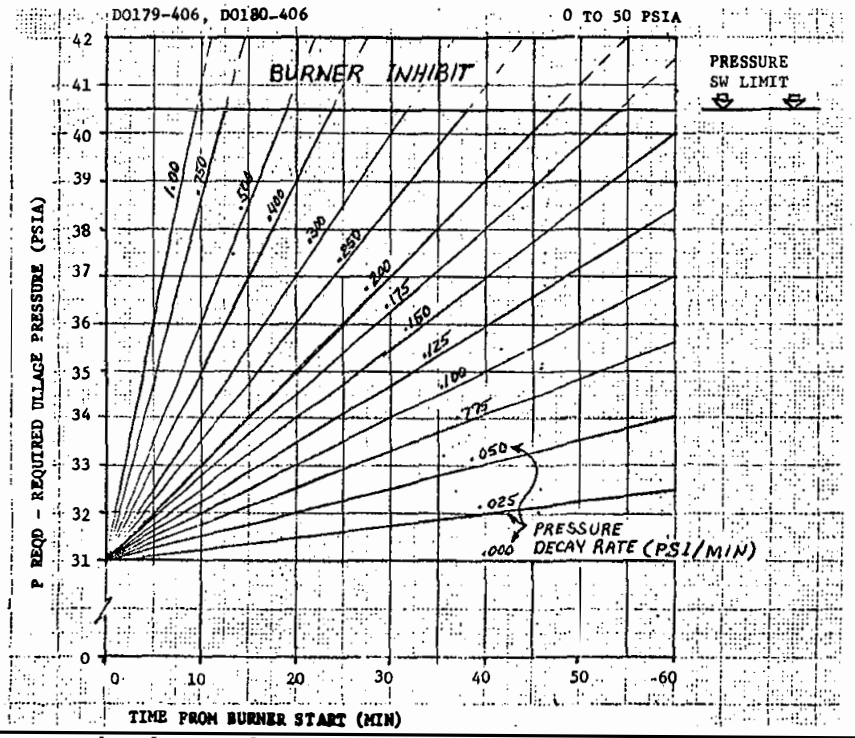

R	ITEM	
	7-20	S-IVB J-2 ENGINE START BOTTLE PRESSURE OUTSIDE RESTART LIMITS

THE START BOTTLE IS FILLED WITH GH2 AND IS STORED UNDER A NOMINAL PRESSURE OF 1250 PSIA. THE GH2 IS USED TO GIVE THE INITIAL SPIN TO THE TURBINE DURING THE START SEQUENCE.

FAILURE POINTS

1. START VENT AND RELIEF VALVE FAILS TO RELIEVE

2. START TANK RELIEF PRESSURE SHIFTED HIGH

CONSEQUENCES

EXCESSIVE PRESSURE IN THE START TANK COULD RESULT IN ELEVATED OXIDIZER SYSTEM POWER BUILDUP CAUSING HIGH LOX PUMP DISCHARGE PRESSURES DURING THE START TRANSIENT. THIS HIGH PRESSURE COULD RESULT IN DAMAGE TO THE FUEL TURBINE AND ASSOCIATED OFF-NOMINAL ENGINE MIXTURE RATIO PERFORMANCE. THE FAILURE WOULD RESULT IN A CREW-SAFE SHUTDOWN DURING TRANSITION OR IF THE ENGINE OBTAINS MAINSTAGE THERE WOULD BE PROBABLE OFF-NOMINAL PERFORMANCE DUE TO ENGINE DAMAGE SUSTAINED DURING ENGINE START.

R	ITEM	
	7-22	S-IVB LOSS OF ENGINE HYDRAULIC FLUID

THE INDEPENDENT, CLOSED LOOP S-IVB HYDRAULIC SYSTEM GIMBALS THE J-2 ENGINE DURING BOOST, COAST, AND ENGINE BURN OPERATIONS. A MAIN HYDRAULIC PUMP, AN AUXILIARY MOTOR-DRIVEN HYDRAULIC PUMP, AN ACCUMULATOR-RESERVOIR, TWO SERVOACTUATORS, AND INTERCONNECTING TUBE AND HOSE ASSEMBLIES COMPRISE THE S-IVB HYDRAULIC SYSTEM. EACH OF TWO IDENTICAL SERVOACTUATOR ASSEMBLIES PROVIDES MECHANICAL FORCE TO GIMBAL THE J-2 ENGINE. THE SERVO VALVE WITHIN EACH ACTUATOR DIVERTS FLUID TO ONE SIDE OR THE OTHER OF THE ACTUATOR PISTONS IN ACCORDANCE WITH SIGNALS RECEIVED BY THE SERVO VALVE TORQUE MOTOR FROM THE FLIGHT CONTROL COMPUTER IN THE IU.

FAILURE POINTS

1. PITCH OR YAW ACTUATOR MALFUNCTION
2. MAIN HYDRAULIC PUMP FAILURE
3. HYDRAULIC HOSE OR TUBING FAILURE
4. AUXILIARY MOTOR-DRIVEN HYDRAULIC PUMP FAILURE

CONSEQUENCES

IGNITION OF THE S-IVB STAGE WITHOUT AN OPERATIVE HYDRAULIC SYSTEM WILL JEOPARDIZE CREW SAFETY. THERE WILL BE A LOSS OF ENGINE GIMBAL CONTROL DURING MAINSTAGE OPERATION, WHICH PROBABLY WILL RESULT IN EXCESSIVE VEHICLE ATTITUDE RATES AND GUIDANCE ERROR. IN ADDITION THE VEHICLE WILL BE UNABLE TO EXECUTE REQUIRED TRAJECTORY CORRECTIONS.

R	ITEM	
	7-25	LOX NON-PROPULSIVE VENT FAILS TO OPEN

DURING ORBITAL VENTING OF THE LOX TANK, THE VENT GAS IS DIRECTED OVERBOARD BY MEANS OF A NON-PROPULSIVE VENT SYSTEM DESIGNED TO MINIMIZE THE VEHICLE ORIENTATION PERTURBATIONS CAUSED BY VENTING. THE TANK IS VENTED AFTER THE SECOND BURN TO PREVENT NON-PROPULSIVE RELIEF VENTING DURING TD&E, AND TO PREVENT UNACCEPTABLE COMMON BULKHEAD POSITIVE DEFFERENTIAL PRESSURE DURING LH2 TANK NON-PROPULSIVE VENTING. AFTER LOX LUMP IN TB8 THE VENT IS LATCHED OPEN TO SAFE THE TANK AND TO PREVENT BULKHEAD DIFFERENTIAL PRESSURE DURING LH2 TANK SAFING.

FAILURE POINTS

1. ACTUATION CONTROL MODULE - LOX TANK NPV VALVE - FAILS TO ACTUATE
2. SEQUENCER - NPV OPEN COMMAND - FAILS TO ACTUATE ACTUATION CONTROL MODULE
3. 10 AMP MAGLATCH RELAY FAILS
4. LOX NPV FAILS CLOSED

CONSEQUENCES

IF THE LOX TANK NPV IS NOT OPENED AT TB7, THE RISE IN LOX TANK ULLAGE PRESSURE DUE TO ULLAGE AND LIQUID HEAT INPUTS WILL RESULT IN RANDOM OR CONTINUOUS NON-PROPULSIVE RELIEF VENTING DURING SPACECRAFT SEPARATION, DOCKING, AND SC/LM EJECTION. IN ADDITION, DUE TO THE BLOWDOWN OF THE LH2 TANK, THE COMMON BULKHEAD POSITIVE DIFFERENTIAL PRESSURE MAY INCREASE TO A VALUE IN EXCESS OF 36 PSID.

IF THE LOX NPV IS NOT LATCHED OPEN AT TB8 AFTER LOX DUMP, THE RISE IN LOX TANK ULLAGE PRESSURE DUE TO ULLAGE AND LIQUID HEAT INPUTS WILL RESULT IN EVENTUAL NON-PROPULSIVE RELIEF VENTING. IN ADDITION, DUE TO THE BLOWDOWN OF THE LH2 TANK, THE COMMON BULKHEAD POSITIVE DIFFERENTIAL PRESSURE MAY INCREASE TO A VALUE IN EXCESS OF 36 PSID. SINCE THIS MAY OCCUR AT A TIME BEYOND THE LIFETIME OF THE STAGE, THE COMMON BULKHEAD DIFFERENTIAL PRESSURE MISSION RULE MAY NOT BE APPLICABLE FOR FURTHER CORRECTIVE ACTION.

R	ITEM	
	7-26	LH2 LATCHING VENT VALVE FAILS TO OPEN THE LH2 LATCHING VENT VALVE IS LATCHED OPENED FOR 15 MINUTES AT TB7 + 0.8 SECONDS AND AGAIN AT TB7 + 60 MIN 0.4 SEC TO VENT THE LH2 TANK PRIOR TO AND AFTER SPACECRAFT SEPARATION. THE VALVE IS PERMANENTLY LATCHED OPEN AT TB8 + 23 MINUTES 27 SECONDS. FAILURE POINTS 1. LH2 LATCHING RELIEF VALVE LATCH 2. LH2 LATCHING RELIEF VALVE FAILS CLOSED CONSEQUENCES FAILURE TO VENT THE LH2 TANK PRIOR TO AND AFTER SPACECRAFT OPERATIONS MAY RESULT IN UNDESIRABLE LH2 TANK VENTING THAT MAY RESULT IN PERTURBATIONS DURING TD&E.

R	ITEM
	7-27

ENGINE START BOTTLE DUMP FAILS TO INITIATE

AT THE COMPLETION OF THE PRIMARY S-IVB MISSION, THE ENTIRE STAGE WILL BE PASSIVATED OR SAFED BY BLEEDING DOWN PNEUMATIC BOTTLES AND SYSTEMS AND DUMPING REMAINING PROPELLANTS. BY THE END OF SECOND BURN THE START BOTTLE WILL HAVE BEEN RECHARGED TO A PRESSURE LEVEL OF APPROXIMATELY 1,150 PSIA. THE PRESSURE SHOULD NOT INCREASE SIGNIFICANTLY ABOVE THIS VALUE, SINCE START BOTTLE DUMP IS INITIATED IMMEDIATELY AFTER SECOND BURN CUTOFF AT START OF TIME BASE 7. ANY INCREASE IN PRESSURE ABOVE THE RELIEF SETTING OF 1,300 +/- 25 PSIA WILL CAUSE VENTING OF EXCESS PRESSURE THROUGH THE START BOTTLE VENT AND RELIEF VALVE.

THE GH2 START BOTTLE WILL BE DUMPED BY OPENING THE VENT AND RELIEF VALVE.

FAILURE POINTS

1. START BOTTLE VENT VALVE FAILS CLOSED
2. STAGE PNEUMATIC POWER CONTROL MODULE FAILS CLOSED
3. ELECTRICAL COMMAND FAILURE

CONSEQUENCES

THE S-IVB STAGE WILL NOT BE IN A SAFE CONDITION IF THE START BOTTLE DUMP IS NOT INITIATED OR IF THE PRESSURE IS NOT BELOW 1,200 PSIA AT 70 DEGREES F.

R	ITEM
	7-28

FAILURE TO INITIATE COLD HELIUM DUMP

AT THE END OF THE S-IVB SECOND BURN, SAFING OF THE STAGE WILL BE INITIATED, INCLUDING COLD HELIUM DUMP. COLD HELIUM IS DUMPED THROUGH THE LH2 TANK VENT WHEN THE REPRESSURIZATION SYSTEM MODE SELECT OFF (CRYOGENIC MODE) AND REPRESSURIZATION CONTROL VALVES OPEN COMMAND IS GIVEN BY THE ONBOARD SEQUENCE.

FAILURE POINTS

1. LH2 CRYOGENIC REPRESSURIZATION VALVES FAIL TO OPEN

2. ELECTRICAL OR COMMAND FAILURE

3. LOX PRESSURIZATION MODULE REGULATOR FAILS CLOSED

CONSEQUENCES

IF THE COLD HELIUM SPHERES FAIL TO DUMP THROUGH THE LH2 CRYOGENIC REPRESSURIZATION SYSTEM, IT CAN BE DUMPED THROUGH THE LOX TANK BY OPENING EITHER THE LOX CRYOGENIC REPRESSURIZATION VALVES OR LOX PRESSURIZATION VALVES. IF THESE ALTERNATIVES FAIL, THE COLD HELIUM CANNOT BE DUMPED AND THE S-IVB CANNOT BE SAFED. THE SPHERE PRESSURE COULD INCREASE TO 3500 PSIA AS THE TEMPERATURE INCREASES FROM 50 TO 400 DEGREES R. THIS IS UNACCEPTABLY CLOSE TO THE AMBIENT TEMPERATURE SPHERE BURST PRESSURE AT 3950 PSIA.

R	ITEM
	8-2

S-IVB STAGE O2/H2 BURNER FUEL PROPELLANT VALVE FAILS CLOSED

THE O2/H2 BURNER USES LOX AND LH2 FROM THE MAIN PROPELLANT TANKS TO HEAT COLD HELIUM FOR REPRESSURIZATION OF THE OXIDIZER AND FUEL TANKS. A THERMAL VOTING CURCUIT THAT SENSES THE TEMPERATURE IN THE GH2 LINE UPSTREAM OF INJECTOR NO. 2 PROVIDES AN INDICATION OF A BURNER NO-LIGHT OR FLAMEOUT. THE CIRCUIT WILL AUTOMATICALLY SHUT DOWN THE BURNER WHEN THE TEMPERATURE IS BELOW -409 TO -411 DEGREES F. THE CIRCUIT WILL NOT DETECT A BURNER MALFUNCTION DUE TO THE LH2 PROPELLANT VALVE FAILING CLOSED (1) AT BURNER START BECAUSE THE TEMPERATURE WILL REMAIN ABOVE THE VOTING CIRCUIT SETTINGS AND (2) DURING BURNER OPERATION BECAUSE THE LOX-RICH MIXTURE WILL CAUSE HIGH BURNER TEMPERATURES.

FAILURE POINTS

1. LH2 PROPELLANT VALVE FAILS CLOSED
2. ACTUATION CONTROL MODULE (LH2 PROP VALVE) FAILS CLOSED
3. SWITCH SELECTOR FAILURE
4. MAGLATCH RELAY FAILS TO SET

CONSEQUENCES

IF THE LH2 PROPELLANT VALVE FAILS CLOSED DURING BURNING OPERATIONS THE BURNER VOTING CIRCUIT WILL NOT DETECT THE MALFUNCTION AND HIGH BURNER TEMPERATURES WILL RESULT. ALSO LOX WILL BE DUMPED OUT OF THE BURNER DUE TO THE LOX MANIFOLD SHUTOFF VALVE REMAINING OPEN. THE COLD HELIUM REPRESSURIZATION SHUTOFF VALVES WOULD REMAIN OPEN UNTIL THE AMBIENT REPRESSURIZATION SYSTEM IS INITIATED DURING TB6 OR UNTIL THE BURNER SHUTDOWN COMMAND IS GIVEN. IF THE COLD HELIUM SHUTOFF VALVES REMAIN OPEN FOR THE ENTIRE BURNER REPRESSURIZATION, THE RESULTANT COLD HELIUM BOTTLE PRESSURE WOULD BE INSUFFICIENT TO MEET THE LOX TANK PRESSURIZATION REQUIREMENTS DURING SECOND BURN AND A SAFE LOW NPSH ENGINE SHUTDOWN WOULD OCCUR PRIOR TO THE COMPLETION OF SECOND BURN.

R	ITEM	
	8-3	LH2 CHILLDOWN SYSTEM FAILS

THE J-2 ENGINE LH2 PUMP IS PRECONDITIONED PRIOR TO RESTART TO ENSURE THE INLET CONDITIONS ARE ACCEPTABLE FOR START. LH2 IS CIRCULATED FROM THE TANK THROUGH A LOW PRESSURE FEED DUCT, THE J-2 ENGINE LH2 TURBOPUMP, AND BACK TO THE TANK THROUGH A RETURN LINE. THE LH2 CHILLDOWN PUMP IS TURNED ON AND THE N. O. LH2 PREVALVE IS CLOSED AFTER INITIATION OF TIME BASE 6. LH2 FLOWS TO THE INLET OF THE TURBOPUMP THROUGH THE N. O. CHILLDOWN VALVE THAT REMAINS IN THE OPENED CONDITION AND BACK TO THE TANK THROUGH THE N. O. BLEED VALVE. JUST PRIOR TO ENGINE START THE PREVALVE IS OPENED. AFTER ENGINE START THE BLEED VALVE IS CLOSED AND THE CHILLDOWN PUMP TURNED OFF.

FAILURE POINTS

1. LH2 CHILLDOWN PUMP FAILS OFF
2. LH2 CHILLDOWN VALVE FAILS CLOSED
3. LH2 BLEED VALVE FAILS CLOSED
4. LH2 PREVALVE FAILS OPEN

CONSEQUENCES

IF THERE IS A FAILURE AT ONE OF THE FAILURE POINTS, LH2 RECIRCULATION WILL NOT BE ACCOMPLISHED. THE ONBOARD SEQUENCED LH2 FUEL LEAD DURING THE ENGINE START SEQUENCE WILL PROVIDE LH2 FEED SYSTEM AND J-2 ENGINE CHILL FOR RESTART. THERE IS A POSSIBILITY THAT LH2 PUMP CAVITATION WILL OCCUR RESULTING IN A FAILURE TO REACH MAINSTAGE AND A CREW SAFE ENGINE SHUTDOWN.

R	ITEM
	8-4

LOX CHILLDOWN SYSTEM FAILS DURING RESTART PREPARATIONS

THE J-2 ENGINE LOX PUMP AND FEED HARDWARE PUMP IS PRECONDITIONED PRIOR TO RESTART TO ENSURE THE INLET CONDITIONS ARE ACCEPTABLE FOR START. LOX IS CIRCULATED FROM THE TANK THROUGH A LOW PRESSURE FEED DUCT, THE J-2 ENGINE LOX TURBOPUMP, AND BACK TO THE TANK THROUGH A RETURN LINE. THE LOX CHILLDOWN PUMP IS TURNED ON AND THE N. O. LOX PREVALVE IS CLOSED AFTER INITIATION OF TIME BASE 6. LOX FLOWS TO THE INLET OF THE TURBOPUMP THROUGH THE N. O. CHILLDOWN VALVE THAT REMAINS IN THE OPENED CONDITION AND BACK TO THE TANK THROUGH THE N. O. BLEED VALVE. JUST PRIOR TO ENGINE START THE PREVALVE IS OPENED. AFTER ENGINE START (ENGINE HELIUM CONTROL SOLENOID ENERGIZED) THE BLEED VALVE IS CLOSED AND THE CHILLDOWN PUMP TURNED OFF.

FAILURE POINTS

1. LOX CHILLDOWN PUMP FAILS OFF
2. LOX CHILLDOWN VALVE FAILS CLOSED
3. LOX BLEED VALVE FAILS CLOSED
4. LOX PREVALVE FAILS OPEN

CONSEQUENCES

IF THERE IS A FAILURE AT ONE OF THE FAILURE POINTS, LOX CHILLDOWN WILL BE ACCOMPLISHED BY A GROUND COMMANDED SEQUENCED LOX LEAD OF APPROXIMATELY 8 SECONDS(ALTERNATE SEQUENCE 6 D). THE LOX LEAD WILL IMPROVE CHANCES OF A SUCCESSFUL ENGINE START. HOWEVER, A LOX LEAD EXCEEDING 8 SECONDS IS UNDESIRABLE BECAUSE THE ENGINE INJECTOR WILL BE OVERCHILLED WHEN COMBINED WITH THE NORMAL 8 SECOND LH2 LEAD. DUE TO COMBUSTION INSTABILITY NOTED ON AS 504, A TLI INHIBIT WILL BE CALLED FOR A LOX LEAD LARGER THAN 20 SECONDS.

R	ITEM
	8-6

S-IVB CONFIRMED HARDOVER ACTUATOR

DURING ORBITAL COAST, NO HYDRAULIC POWER IS SUPPLIED TO THE ACTUATORS EXCEPT WHEN THE AUXILIARY HYDRAULIC PUMP IS TURNED ON FOR THERMAL CYCLE. IN THE POWER OFF CONDITION, ENGINE POSITION WILL VARY +/- 3 DEGREES DEPENDING ON DUCT LEADS, GIMBAL BEARING FRICTION, ETC. DURING THE ENGINE IGNITION STARTING TRANSIENT, MOMENTARY PITCH OR YAW ACTUATOR EXCURSIONS AS HIGH AS +/- 3 DEGREES ARE NORMALLY EXPERIENCED. LARGE ACTUATOR DEFLECTIONS MAY OCCUR AT THIS TIME DEPENDING ON VEHICLE ATTITUDE. THE ACTUATORS MAY BE OFFSET FROM NULL DURING ENGINE BURN AS MUCH AS +/- 1.5 DEGREES DUE TO THRUST MISALIGNMENT, ENGINE INSTALLATION-TOLERANCES, UNCOMPENSATED GIMBAL CLEARANCES AND THRUST STRUCTURE COMPRESSION EFFECTS. AFTER THE INITIAL ENGINE BURN STARTING TRANSIENTS, THERE SHOULD BE VERY LITTLE MOVEMENT OF THE ACTUATORS DURING POWERED FLIGHT.

FAILURE POINTS

1. SERVOACTUATOR VALVE

CONSEQUENCES

DURING SECOND S-IVB BURN, AN ACTUATOR HARDOVER FAILURE PRODUCES RAPID DIVERGENCE OF ATTITUDE ERROR AND BODY RATE, TUMBLING, AND IMMEDIATE LOSS OF CONTROL. THIS IS THE MOST LIMITING CASE FOR MANUAL ABORT TIMING AND ANY DELAY MUST BE MINIMIZED TO PREVENT EXCEEDING THE SPACECRAFT PLATFORM TUMBLE LIMITS. EDS STUDIES SHOW THAT FOR EVEN A 2-SECOND BURN OF THE J-2 THE VEHICLE WOULD COMPLETE ABOUT 3 1/2 REVOLUTIONS BEFORE A RECOVERY COULD BE MADE WITH THE APS.

R	ITEM
	8-7

CONTINUOUS VENT SYSTEM REGULATOR FAILS TO CLOSE DURING RESTART SEQUENCE

THE CVS IS CLOSED DURING RESTART PREPARATIONS SO THAT THE LH2 TANK CAN BE REPRESSURIZED TO AN ACCEPTABLE LEVEL FOR RESTART. DURING ENGINE BURN, THE VENTS MUST BE CLOSED IN ORDER THAT THE LH2 TANK PRESSURIZATION SYSTEM CAN PROVIDE ADEQUATE NPSP.

DURING J-2 ENGINE OPERATION, ULLAGE PRESSURE IS PROVIDED BY GH2 BLEED FROM THE J-2 ENGINE. THE GASES FLOW TO THE TANK THROUGH THREE ORIFICED FLOW PATHS. ONE PATH IS ALWAYS OPEN, AND NORMALLY OPEN SOLENOID VALVES CONTROL THE OTHER TWO. AFTER J-2 ENGINE START, A SWITCH SELECTOR COMMAND CLOSES ONE SOLENOID VALVE AND ENABLES THE FLIGHT CONTROL PRESSURE SWITCH TO CONTROL THE OTHER VALVE.

FAILURE POINTS

1. CONTINUOUS VENT REGULATOR FAILS OPEN

2. SWITCH SELECTOR FAILURE

3. MAGLATCH RELAY FAILS TO SET

CONSEQUENCES

IF THE CVS REGULATOR FAILS OPEN AT INITIATION OF RESTART PREPS, THE REGULATOR WILL VENT GAS AT A RATE EQUAL TO THE CRYOGENIC REPRESSURIZATION RATE. HOWEVER, THE AMBIENT REPRESSURIZATION SYSTEM WILL PROVIDE ADEQUATE NPSP FOR RESTART. DURING BURN THE CORRECTIVE ACTION WILL OPEN ALL THREE PATHS OF THE LH2 PRESSURIZATION CONTROL MODULE TO PROVIDE THE ADDITIONAL PRESSURANT REQUIRED.

R	ITEM
	8-8

LOSS OF ATTITUDE CONTROL DURING S-IVB SECOND BURN

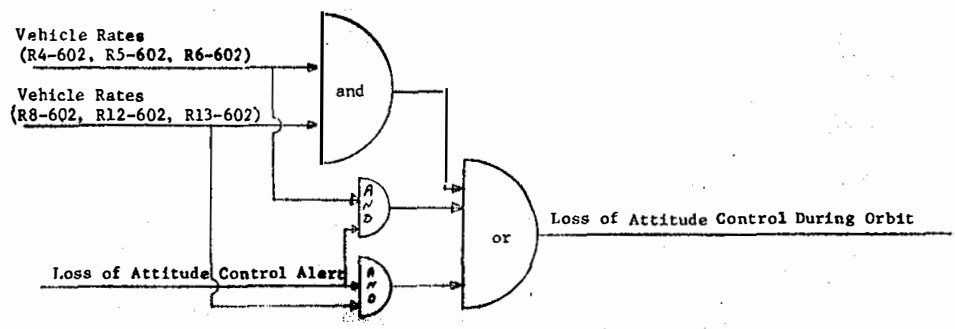

ATTITUDE CONTROL OF THE ENTIRE SATURN VEHICLE IS CONTROLLED THROUGH THE INSTRUMENT UNIT. THIS CONTROL IS NECESSARY TO KEEP THE VEHICLE IN THE CORRECT LAUNCH TRAJECTORY FOR PROPER ORBIT INSERTION AND FOR MAINTAINING THE CORRECT VEHICLE ATTITUDE WHILE IN ORBIT.

FAILURE POINTS

1. SWITCH SELECTOR FAILURE
2. LVDC FAILURE
3. ST-124 PLATFORM FAILURE
4. APS FAILURE

CONSEQUENCES

LOSS OF ATTITUDE CONTROL DURING ORBIT WILL EVENTUALLY RESULT IN EXCESSIVE RATES IN THE AFFECTED AXIS AND AN INABILITY TO PERFORM REQUIRED MANEUVERS. THE LV/CSM ATTITUDE WILL BE UNCONTROLLABLE AND WILL DIVERGE.

R	ITEM
	8-8 CONT.

Loss of Attitude Control Alert During Orbit

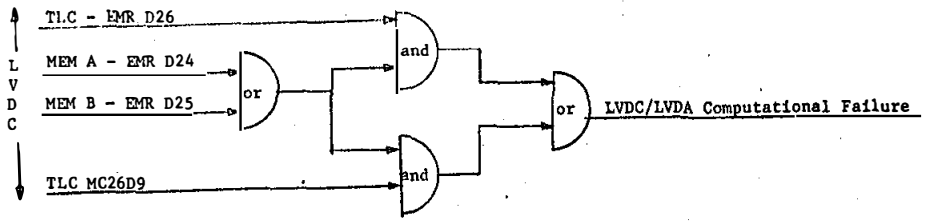

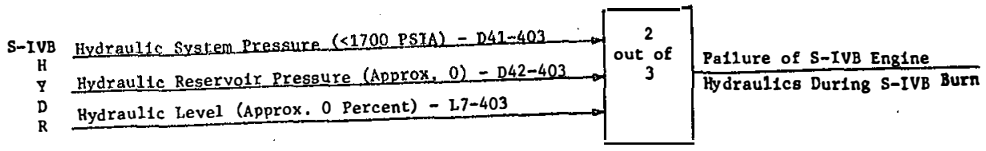

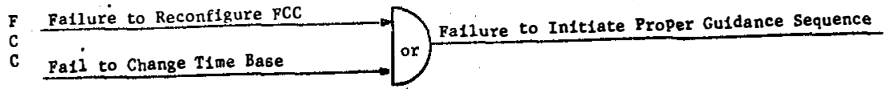

Loss of Attitude Control S-IVB Second Burn

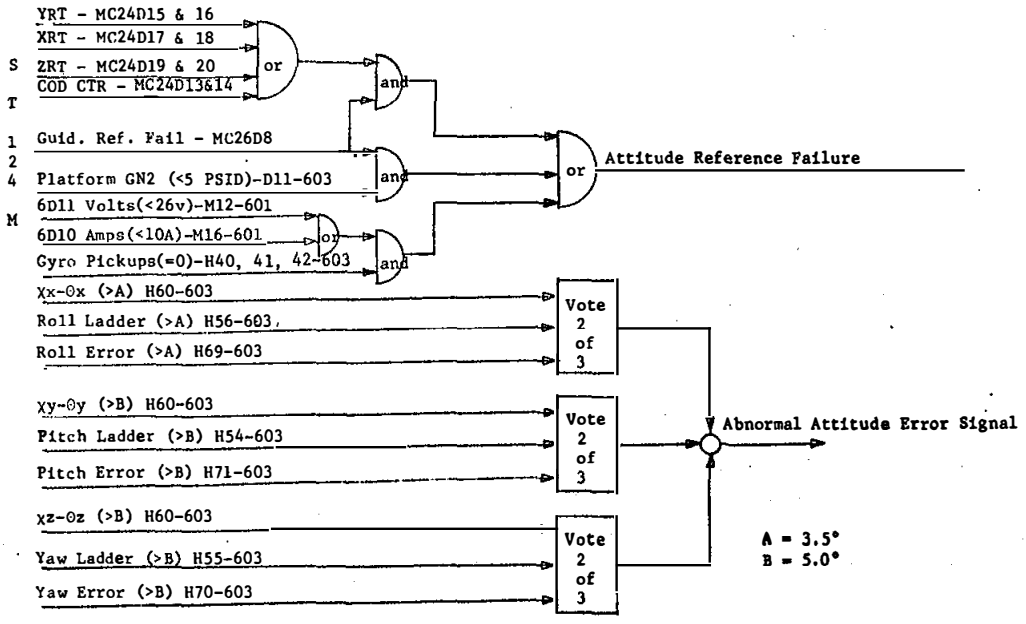

R	ITEM	
	9-1	S-IVB AMBIENT HELIUM DUMP FAILS TO INITIATE

AS A PART OF THE AS-507 MISSION, THE S-IVB STAGE WILL GO THROUGH A PASSIVATION SAFING PROCEDURE, INCLUDING DUMPING THE AMBIENT HELIUM BOTTLE. THIS IS ACCOMPLISHED BY OPENING THE ENGINE PUMP PURGE VALVE AND DUMPING THROUGH THE ENGINE TURBOPUMP PURGES AND GAS GENERATOR PURGE.

FAILURE POINTS

1. ENGINE PUMP PURGE CONTROL VALVE FAILS CLOSED

2. ELECTRICAL COMMAND FAILURE

CONSEQUENCES

THE S-IVB STAGE WILL NOT BE IN A ''SAFE'' CONDITION IF THE PRESSURE IS BELOW 2,000 PSIA AT 210 DEGREES F (1/4 BURST PRESSURE). THE AMBIENT HELIUM SPHERE PRESSURE WILL NOT INCREASE SIGNIFICANTLY FROM THE PRESSURE AT THE TIME OF THE FAILURE. IN THE EVENT OF FAILURE TO DUMP THIS BOTTLE, THE CONTINUOUS BLEED PROVIDED BY THE LOX CHILLDOWN PUMP PURGE AND NORMAL LEAKAGE WILL RESULT IN MEETING THE 4,000 PSIA AT 210 DEGREES F CONTINGENCY CASE (1/2 BURST PRESSURE).

R	ITEM
	9-2

LOX DUMP FAILS TO INITIATE

AT THE TERMINATION OF S-IVB SECOND BURN, THE S-IVB STAGE WILL BE PASSIVATED-- I. E., LOX DUMPED, LH2 VENTED, AND PRESSURE BOTTLES BLOWN DOWN. THE LOX DUMP IS ACCOMPLISHED BY OPENING THE J-2 ENGINE MAINSTAGE CONTROL SOLENOID AND THE ENGINE HELIUM CONTROL SOLENOID, RESPECTIVELY. THIS ALLOWS LOX TO BE DUMPED THROUGH THE ENGINE THRUST CHAMBER.

FAILURE POINTS

1. DEPLETED ENGINE CONTROL HELIUM SUPPLY
2. LOX PREVALVE FAILS CLOSED
3. SEQUENCING FAILURE
4. MAIN LOX VALVE FAILS CLOSED (ENGINE)
5. MAINSTAGE CONTROL SOLENOID FAILS CLOSED
6. ENGINE HELIUM CONTROL SOLENOID FAILS CLOSED

CONSEQUENCES

LOSS OF LOX DUMP AND ITS RESULTING THRUST OF APPROXIMATELY 700 POUNDS COULD PREVENT THE S-IVB FROM ENTERING THE LUNAR IMPACT TRAJECTORY AND WILL CAUSE LOX TANK SAFING TO BE ACCOMPLISHED BY VENTING THROUGH THE LOX NPV.

R	ITEM
	9-3

ENGINE CONTROL BOTTLE HELIUM DUMP FAILS TO INITIATE

AT THE TERMINATION OF SECOND BURN, THE S-IVB WILL BE PASSIVATED-- I. E., THE PROPELLANTS DUMPED AND PRESSURE BOTTLES BLOWN DOWN. THE STAGE AMBIENT REPRESSURIZATION SPHERES ARE CONNECTED TO THE ENGINE CONTROL BOTTLE AND THUS SUPPLY HELIUM TO CONTINUOUSLY REPLENISH THE ENGINE CONTROL BOTTLE. THE AMBIENT REPRESSURIZATION SPHERE ARE DUMPED TO APPROXIMATELY 1500 PSIA AT THE INITIATION OF DUMP. THE ENGINE CONTROL SPHERE PRESSURE, DURING LOX AND LH2 DUMP, WILL THEN ALSO BLOW DOWN TO APPROXIMATELY 1500 PSIA. FROM THIS POINT, THE FLOW IS A COMBINED AMBIENT AND CONTROL BOTTLE HELIUM.

FAILURE POINTS

1. ENGINE HELIUM CONTROL SOLENOID VALVE FAILS CLOSED

2. ELECTRICAL COMMAND FAILURE

CONSEQUENCES

IF THE ENGINE CONTROL BOTTLE DUMP FAILS TO INITIATE, THE STAGE WILL NOT BE COMPLETELY SAFED. IF THE PRESSURE IS NOT BELOW THE 3,700 PSI (AMBIENT) MAXIMUM SAFE OPERATING PRESSURE THE BOTTLE IS NOT CONSIDERED SAFE.

5 CSM SYSTEMS

R	ITEM

CMS EECOM MISSION RULE RATIONALE
(BASED ON MISSION RULES EFFECTIVE THIS DATE)

I. INTRODUCTION - APOLLO 12 CSM EECOM MISSION RULES HAVE BEEN DEVELOPED TO PROVIDE FOR CREW SAFETY AND A HIGH PROBABILITY OF SUCCESSFUL ACCOMPLISHMENT OF MISSION OBJECTIVES. TO ACHIEVE THIS THE FOLLOWING CRITERIA HAVE BEEN USED---

A. MAXIMUM UTILIZATION OF LM SYSTEMS AS BACKUP TO CSM SYSTEMS. THE LM SYSTEMS WILL NOT BE USED UNTIL A FAILURE OR A PROGRESSION OF FAILURES HAS DEPRIVED THE CSM OF AN ESSENTIAL CAPABILITY. AT THAT TIME, THE LM SYSTEMS WILL NORMALLY BE USED FOR THE MOST PRACTICAL RETURN TO EARTH.

B. ONCE LUNAR ORBIT HAS BEEN ACHIEVED, FAILURE OF A COMPONENT OR SYSTEM WHICH LEAVES THE CSM WITH ONE REMAINING CAPABILITY TO PERFORM AN ESSENTIAL FUNCTION, WHERE THIS FUNCTION IS NOT REQUIRED TO MAINTAIN CAPABILITY TO PERFORM TEI WITH THE CSM, AND WHERE THE LIKELIHOOD OF FAILURE OF THE REMAINING COMPONENT OR SYSTEM IS ASSOCIATED WITH THE MEAN TIME BEFORE FAILURE PROBABILITY, THE MISSION WILL NORMALLY BE CONTINUED. THE RATIONALE IS--- FROM LUNAR ORBIT THE RETURN TO EARTH TIME IS AT LEAST 2 DAYS AND FROM SOME POINTS EVEN LONGER. THUS SITUATED, THE SPACECRAFT AND CREW ARE ALREADY COMMITTED TO ENDURING THIS SUBSTANTIAL PERIOD OF SOME DEGREE OF RISK OF THE REMAINING COMPONENT OR SYSTEM FAILING. TO CONTINUE WITH THE NOMINAL MISSION WILL INCREASE THE MISSION TIME BY AN AMOUNT EQUAL TO THE REMAINING SCHEDULED TIME IN LUNAR ORBIT, AND THE INCREASE IN TIME, THOUGH SIGNIFICANT, DOES NOT EXCESSIVELY INCREASE THE TOTAL MISSION TIME, RELATIVELY SPEAKING. BECAUSE OF THIS, THE OBJECTIVES WHICH CAN BE ACHIEVED BY CONTINUING THE MISSION WITH SUCH A CONDITION ARE CONSIDERED WORTH THE SLIGHT INCREASE IN RISK.

C. THERE ARE NO CSM EECOM SYSTEMS FAILURES FOR WHICH POWERED DESCENT WILL BE TERMINATED. POWERED DESCENT REQUIRES APPROXIMATELY 12 MINUTES FROM INITIATION TO TOUCHDOWN AND RELIABLE RECOGNITION OF PROBLEMS IN THIS TIME FRAME IS UNLIKELY. ADDITION OF THE CSM AUX BATTERY WILL ALLOW LIFTING OFF AT T3 WHICH WILL PERMIT ADDITIONAL SYSTEM ANALYSIS TIME.

II. MISSION RULES RATIONALE

A. BY MISSION PHASE---

1. LAUNCH - THE ONLY REASONS FOR WHICH LAUNCH WILL BE ABORTED ARE---

(A) FAILURES WHICH RESULT IN LOSS OF A VIABLE ENVIRONMENT FOR THE CREW. THIS OCCURS ONLY AFTER LOSS OF CABIN INTEGRITY AND FAILURES WHICH RESULT IN LOSS OF THE SUITED CAPABILITY (I.E., LOSS OF SUIT INTEGRITY, BOTH MAIN REGULATORS OR DEMAND REGULATORS FAILED CLOSED, LOSS OF BOTH SUIT COMPRESSORS, OR LOSS OF THE O2 MANIFOLD.) SINCE THE CREW CANNOT SURVIVE UNDER THESE ENVIRONMENTAL CONDITIONS, IT IS ESSENTIAL THAT THE CREW RETURN TO THE EARTH'S ATMOSPHERE IMMEDIATELY.

(B) FAILURES WHICH RESULT IN LOSS OF ELECTRICAL POWER SOURCES TO THE EXTENT THAT THE 2-1 ENTRY CANNOT BE ACHIEVED. (THIS OCCURS ONLY WITH LOSS OF ALL SM POWER SOURCES AND ONE ENTRY BATTERY.) SINCE CONTINUATION CAN ONLY HAVE DISASTEROUS RESULTS, AN IMMEDIATE ABORT IS NECESSARY.

2. POWERED DESCENT- THERE ARE NO CSM EECOM SYSTEM FAILURES FOR WHICH POWERED DESCENT WILL BE TERMINATED. LIFTOFF FROM THE LUNAR SURFACE WILL BE PERFORMED NO SOONER THAN T3 FOR ANY CSM EECOM SYSTEM FAILURES. THE AUX BATTERY IS CAPABLE OF PROVIDING SUFFICIENT ELECTRICAL ENERGY TO SUPPORT TEI AND A LOW POWER RETURN TO EARTH.

3. ALL OTHER POWERED FLIGHT - THERE ARE NO FAILURES FOR WHICH THESE WILL BE TERMINATED. NOMINAL COMPLETION OF THESE POWERED PHASES, IN EACH CASE, WILL PLACE THE SPACECRAFT ON AN EXPECTED AND REASONABLY WELL KNOWN TRAJECTORY FROM WHICH A PREPLANNED RETURN MANEUVER CAN BE MADE. EARLY TERMINATION OF A MANEUVER LEAVES THE SPACECRAFT ON AN UNKNOWN TRAJECTORY WHICH WILL REQUIRE TIME TO DETERMINE. IN THE MOST PROBABLE FAILURE CASES, IT IS SAFER TO COMPLETE THE MANEUVER. IN THOSE OTHER CASES WHERE THE CREW IS IMMEDIATELY ENDANGERED, TERMINATION OF THE MANEUVER WILL NOT IMPROVE THE SITUATION SIGNIFICANTLY.

4. TRANSPOSITION, DOCKING, AND EXTRACTION - THE ONLY FAILURE FOR WHICH TD&E WILL BE INHIBITED IS FAILURE OF THE DOCKING LATCHES TO THE EXTENT THAT LESS THAN THREE LATCHES LOCATED 120 DEGREES APART OR THE STRUCTURAL EQUIVALENT EXIST. WITH THIS CONDITION, THE DOCKED CONFIGURATION IS STRUCTURALLY UNSOUND AND DAMAGE TO THE SPACECRAFT MAY RESULT. ALTHOUGH TD&E AS OUTLINED HERE CAN BE PERFORMED WITH A MULTITUDE OF FAILURES, THIS DOES NOT IMPLY THAT THE MISSION WILL BE CONTINUED, NOR DOES IT MEAN THAT TD&E WILL BE PERFORMED - JUST THAT IT COULD BE PERFORMED IF DESIRED. IT SHOULD BE NOTED THAT SUIT INTEGRITY IS NOT REQUIRED FOR TD&E. FOR MISSION RULE PURPOSES AND FOR PRACTICAL PURPOSES, CABIN INTEGRITY IS NOT CONSIDERED A SINGLE POINT FAILURE.

R	ITEM

5. POST DOCKING/LM JETTISON - THE LM, WITH OR WITHOUT THE DESCENT STAGE WILL BE RETAINED THROUGH TEI (WITHIN DELTA V CONSTRAINTS) FOR THOSE CSM SYSTEMS FAILURES WHICH LEAVE THE CSM WITH ONE REMAINING CAPABILITY TO PERFORM AN ESSENTIAL FUNCTION AND WHERE SUBSEQUENT LOSS OF THE REMAINING CAPABILITY WILL BE SUPPLEMENTED AND/OR REPLACED BY THE LM SYSTEMS.

B. BY SPACECRAFT SYSTEM OR COMPONENT - MISSION PHASES DISCUSSED IN THE PREVIOUS SECTION (SECTION A) ARE NOT COVERED IN THIS SECTION.

1. ENVIRONMENTAL CONTROL SYSTEM

(A) CABIN INTEGRITY - CABIN INTEGRITY IS REQUIRED TO INITIATE AND CONTINUE ALL MISSION PHASES. THE LOSS OF CABIN INTEGRITY NECESSITATES THE RELIANCE ON THE SUITS TO PROVIDE THE CREW WITH A VIABLE ENVIRONMENT. THE SUITS ARE UNCOMFORTABLE, ARE EXTREMELY FATIGUING WHEN CREW ACTIVITY IS REQUIRED, CAN LIMIT CAPABILITY TO PERFORM ROUTINE CREW FUNCTIONS, AND CAN PLACE ONE OR ALL CREWMEN IN A HAZARDOUS ENVIRONMENT AS A RESULT OF ONLY A SINGLE FAILURE. FOR THESE REASONS, IT IS CONSIDERED UNSAFE AND IMPRACTICAL TO CONTINUE THE MISSION WITH LOSS OF CABIN INTEGRITY.

(B) FIRE OR SMOKE IN CABIN - TO INITIATE AND CONTINUE ALL MISSION PHASES, THE CABIN MUST BE FREE OF FIRE OR SMOKE. ASIDE FROM THE OBVIOUS IMMEDIATE HAZARD TO THE CREW, FIRE WILL DAMAGE EQUIPMENT IN THE SPACECRAFT, THE EXTENT OF WHICH IN ALL LIKELIHOOD WILL NOT BE KNOWN. CONSEQUENTLY, EVEN IF THE FIRE HAS BEEN CONTROLLED, ALL MISSION PHASES WILL BE TERMINATED IF A FIRE HAS OCCURRED.

(C) O2 MANIFOLD LEAKS - THE O2 MANIFOLD IS DEFINED AS THAT PORTION OF THE 900 PSIA SYSTEM DOWNSTREAM OF THE SM SUPPLY VALVE, AND THE 100 PSIA SYSTEM. O2 MANIFOLD LEAKS RESULT IN EXCESSIVE O2 USAGE AND OVERPRESSURIZATION OF THE CABIN AND/OR LOSS OF CAPABILITY TO PRESSURIZE WATER TANKS (RESULTING IN POSSIBLE LOSS OF WATER DUMP CAPABILITY WITH ITS POTENTIAL EFFECT ON FUEL CELLS), LOSS OF WATER REMOVAL FROM THE CABIN (WITH RESULTING HIGH HUMIDITY AND EXCESSIVE FREE WATER IN THE CABIN), AND LOSS OF AUTOMATIC CABIN PRESSURE CONTROL. IF THE LEAK RESULTS IN EXCESSIVE DEPLETION OF THE OXYGEN SUPPLY, IT WILL BE NECESSARY TO ISOLATE THE MANIFOLD. CABIN PRESSURE CAN BE MAINTAINED BY MANUALLY INTRODUCING OXYGEN INTO THE CABIN THROUGH THE RUPTURED MANIFOLD OR THROUGH THE REPRESS O2 VALVE. WITH THE EXISTENCE OF COLD CABIN WALLS AND COLD GLYCOL LINES, IT IS UNLIKELY THAT EXCESSIVE HUMIDITY WILL RESULT FROM LOSS OF SUIT LOOP WATER REMOVAL CAPABILITY, ALTHOUGH CONSIDERABLE FREE WATER WILL UNDOUBTEDLY EXIST IN THE CABIN. THIS CAN BE COLLECTED FROM ITS CONDENSATION POINTS USING THE VACUUM CONNECTION TO THE OVERBOARD DUMPS. IF NECESSARY, FORCED EVAPORATION CAN BE USED TO DISPOSE OF EXCESS FUEL CELL WATER ONCE THE WATER TANKS ARE FULL. IT WILL BE NECESSARY TO CHECK THE CO2 CANNISTERS PERIODICALLY TO INSURE THAT SWELLING DOES NOT OCCUR AS A RESULT OF THE ADDITIONAL WATER IN THE CABIN ATMOSPHERE. BECAUSE THESE CAPABILITIES DO EXIST, THE MISSION WILL BE CONTINUED ONCE UNDOCKING HAS BEEN PERFORMED. (UNDOCKING WILL NOT BE PERFORMED WITH THIS CONDITION BECAUSE THE BACKUP MEANS OF CREW TRANSFER FROM THE LM TO THE CSM, I.E., EVT, IS LOST.) THE INCREASE IN MISSION TIME RESULTING FROM CONTINUING THE NOMINAL MISSION PRODUCES A SLIGHT INCREASE IN RISK WHICH IS CONSIDERED ACCEPTABLE IN LIGHT OF THE OBJECTIVES WHICH CAN BE ACHIEVED. HOWEVER, BECAUSE THIS PROBLEM WILL REQUIRE CONSIDERABLE CREW ATTENTION AND BECAUSE IT DOES REPRESENT SOME INCREASE IN RISK TO CREW SAFETY, ALL MISSION PHASES PRIOR TO UNDOCKING WILL BE TERMINATED.

(D) MAIN O2 REGULATORS - TLI WILL BE INHIBITED IF ONE MAIN O2 REGULATOR HAS FAILED CLOSED BECAUSE FAILURE OF THE REMAINING REGULATOR IN THE CLOSED POSITION WILL RESULT IN LOSS OF THE CAPABILITIES DISCUSSED IN "C" ABOVE (FOR O2 MANIFOLD LEAKS WHICH REQUIRE ISOLATION OF THE MANIFOLD). BECAUSE OF THE CREW TASKS INVOLVED AND THE INCREASE IN RISK TO THE CREW, TLI WILL NOT BE PERFORMED. IF ONE MAIN O2 REGULATOR HAS FAILED OPEN AND THE OTHER IS FUNCTIONING NORMALLY, TLI WILL BE PERFORMED. FULL CAPABILITY REMAINS BY MANUAL REGULATION OF THE FAILED OPEN REGULATOR IN THE EVENT THE OTHER REGULATOR FAILS CLOSED. ONCE TLI HAS BEEN PERFORMED, THE MISSION WILL BE CONTINUED AS LONG AS ONE MAIN REGULATOR PERFORMS NORMALLY BECAUSE FULL CAPABILITY REMAINS. IF THE REGULATOR FAILS PRIOR TO UNDOCKING, THE LOSS OF CAPABILITY ASSOCIATED WITH THIS FAILURE REQUIRES MISSION TERMINATION-- HOWEVER, THE REMAINING CAPABILITY AS DESCRIBED IN "C" ABOVE WILL ALLOW SATISFACTORY TERMINATION OF THE MISSION. UNDOCKING WILL NOT BE PERFORMED IF BOTH MAIN REGULATORS HAVE FAILED BECAUSE THE BACKUP CAPABILITY TO TRANSFER THE CREW FROM THE LM TO THE CSM IS LOST. AFTER UNDOCKING HAS BEEN PERFORMED, THE MISSION WILL BE CONTINUED BECAUSE ADDITIONAL RISK ASSOCIATED WITH CONTINUING FOR THE ADDITIONAL TIME INVOLVED WITH BOTH MAIN REGULATORS FAILED IS CONSIDERED ACCEPTABLE IN LIGHT OF THE OBJECTIVES WHICH CAN BE ACHIEVED.

R	ITEM

(E) ECS COOLANT LOOPS, ECS RADIATORS, AND ECS EVAPORATORS - NEITHER ECS EVAPORATOR IS REQUIRED TO INITIATE OR CONTINUE ANY MISSION PHASE. EARTH ORBIT WILL BE CONTINUED AS LONG AS EITHER COOLANT LOOP WITH ITS ASSOCIATED RADIATOR IS AVAILABLE AND AS LONG AS IT IS PRACTICAL. THIS CAN BE DONE BECAUSE BY POWERING THE SPACECRAFT DOWN AFTER FAILURE OF THE REMAINING COOLANT LOOP, AT LEAST 4 HOURS OF POWERED DOWN ORBIT LIFETIME FOLLOWED BY 1.5 HOURS POWERED UP CAN BE ACHIEVED AFTER LOSS OF ALL COOLING, WHICH WILL ALLOW A SATISFACTORY ENTRY. TO COMMIT TO TLI OR LOI OR TO CONTINUE TLC REQUIRES BOTH COOLANT LOOPS AND BOTH RADIATORS. IF EITHER LOOP IS LOST, AN ADDITIONAL FAILURE WILL RESULT IN LOSS OF ALL COOLING. IN PARTICULAR, LOSS OF THE PRIMARY LOOP WILL RESULT IN LOSS OF THE G&N SYSTEM WHICH WILL MAKE MISSION CONTINUATION IMPRACTICAL. SINCE LOSS OF EITHER RADIATOR MAKES THE RESPECTIVE LOOP DEPENDENT UPON ITS EVAPORATOR WHICH IS LIMITED IN CAPABILITY BY THE WATER AVAILABLE, THE LOOP IS LOST ALTHOUGH ULTIMATE LOSS WILL BE EXTENDED UNTIL THE WATER SUPPLY IS EXPENDED. CONSEQUENTLY, LOSS OF THE RADIATOR IS TREATED AS LOSS OF THE RESPECTIVE LOOP AFTER TLI. AFTER LOI, THE MISSION WILL BE CONTINUED IF THE SECONDARY LOOP IS LOST AS LONG AS THE PRIMARY LOOP IS AVAILABLE. THE SUBSEQUENT LOSS OF THE PRIMARY COOLANT LOOP IS ASSOCIATED WITH MEAN TIME BEFORE FAILURE CRITERIA ESTABLISHED IN THE INTRODUCTION. ALSO, CONSIDERATION WILL BE GIVEN TO CONTINUING THE MISSION IF THE PRIMARY RADIATORS ARE LOST AS LONG AS THE SECONDARY LOOP AND THE PRIMARY LOOP WITH EVAPORATIVE COOLING ONLY ARE STILL AVAILABLE. IN THIS CONFIGURATION FULL CAPABILITY REMAINS, AND THE OBJECTIVES MAKE IT WORTHWHILE TO CONTINUE.

AFTER PDI HAS BEEN INITIATED, THE MISSION WILL BE CONTINUED TO T3 EVEN IF ALL COOLING IS LOST. EVEN THOUGH THE TIME REQUIRED FOR RENDEZVOUS WILL BE IN EXCESS OF THE NO COOLING CAPABILITY OF CSM SYSTEMS, ANALYSIS INDICATES THAT THE CSM CAN CONTINUE FOR AN EXTENDED PERIOD POWERED DOWN WITH NO COOLING. SINCE A POWER DOWN WILL BE REQUIRED PRIOR TO COMPLETION OF RENDEZVOUS IN ANY CASE, THE LUNAR LANDING MAKES IT WORTHWHILE TO CONTINUE.

AFTER TOUCHDOWN, THE NOMINAL MISSION WILL BE CONTINUED IF THE PRIMARY LOOP IS LOST AS LONG AS THE SECONDARY LOOP REMAINS. SINCE THE G&N WOULD HAVE TO BE POWERED DOWN PRIOR TO COMPLETING A RENDEZVOUS, NOTHING IS LOST BY CONTINUING THE NOMINAL LUNAR STAY. THE PROBABILITY OF FAILURE OF THE SECONDARY LOOP IS ASSOCIATED WITH THE MEAN TIME BEFORE FAILURE CRITERIA DEVELOPED IN THE INTRODUCTION.

(F) SUIT INTEGRITY - SUIT INTEGRITY IS REQUIRED TO BE GO FOR UNDOCKING TO PROVIDE A BACKUP MEANS OF CREW TRANSFER (EVT) IN THE EVENT THE TWO SPACECRAFT CANNOT BE REDOCKED. ALL OTHER MISSION PHASES WILL BE CONTINUED WITH LOSS OF SUIT INTEGRITY BECAUSE CABIN CAN PROVIDE ALL NECESSARY LIFE SUPPORT FUNCTIONS. FOR MISSION RULE PURPOSES, CABIN INTEGRITY IS NOT CONSIDERED A SINGLE POINT FAILURE ITEM.

(G) GLYCOL LEAK IN COMMAND MODULE - TO INITIATE AND CONTINUE ALL MISSION PHASES, THE COMMAND MODULE MUST BE FREE OF GLYCOL LEAKS, GLYCOL IS TOXIC AND ITS PRESENCE IN THE CM ATMOSPHERE IS HAZARDOUS TO THE CREW. IT IS NECESSARY TO MINIMIZE EXPOSURE TO THIS ENVIRONMENT-- CONSEQUENTLY, ALL MISSION PHASES WILL BE TERMINATED IF A GLYCOL LEAK HAS OCCURRED. THE LM WILL BE RETAINED FOR TEI TO PROVIDE THE CREW WITH A NON-TOXIC ENVIRONMENT FOR TRANSEARTH COAST FOR AS MUCH TIME AS POSSIBLE.

(H) EXCESSIVE CABIN HUMIDITY - TO INITIATE AND CONTINUE ALL MISSION PHASES, THE COMMAND MODULE MUST BE FREE OF EXCESSIVE CABIN HUMIDITY. EXCESSIVE HUMIDITY RETARDS THE CREW'S CAPABILITY TO REJECT BODY HEAT. THE CAPACITY OF THE HUMAN BODY TO RETAIN HEAT WITHOUT A REDUCTION IN PHYSICAL CAPABILITY IS LIMITED (APPROXIMATELY 400 BTU). IT IS NECESSARY TO MINIMIZE EXPOSURE TO THIS ENVIRONMENT-- CONSEQUENTLY, ALL MISSION PHASES WILL BE TERMINATED IF EXCESSIVE CABIN HUMIDITY OCCURS. THE LM WILL BE RETAINED FOR TEI TO PROVIDE THE CREW WITH A SATISFACTORY ENVIRONMENT FOR TRANSEARTH COAST.

R	ITEM

(I) POTABLE H2O TANK AND WASTE H2O TANK - NEITHER THE POTABLE TANK NOR THE WASTE TANK IS REQUIRED TO INITIATE OR TO CONTINUE ANY MISSION PHASE EXCEPT EARTH ORBIT, WHERE THE POTABLE TANK IS NECESSARY FOR DRINKING WATER. NEITHER EVAPORATOR IS REQUIRED FOR ANY MISSION PHASE-- THEREFORE, THE WASTE TANK IN NOT NECESSARY. IF THE POTABLE TANK IS LOST, THE LM WATER SUPPLY CAN BE USED FOR CREW CONSUMPTION, ALTHOUGH IT MAY BE NECESSARY TO AMEND THE LM TIMELINE BECAUSE OF DEPLETION OF LM WATER BY THIS MEANS. THE AMOUNT OF WATER AVAILABLE IN THE ASCENT STAGE AFTER A NOMINAL LUNAR STAY AND RENDEZVOUS WILL BE APPROXIMATELY 25 POUNDS. WHILE THIS IS LESS THAN NOMINAL CREW CONSUMPTION, IT IS ADEQUATE TO ALLOW A SAFE RETURN TO EARTH.

(J) SUIT COMPRESSORS - ONE SUIT COMPRESSOR OR THE VACUUM CLEANER IS REQUIRED TO CONTINUE EARTH ORBIT SINCE ENTRY CAN BE PERFORMED IN A TIME FRAME COMPATIBLE WITH CO2 BUILDUP IN THE CM AND USE OF THE O2 FACE MASKS. BOTH SUIT COMPRESSORS MUST BE AVAILABLE TO PERFORM TLI. IF ONE SUIT COMPRESSOR HAS BEEN LOST BETWEEN LAUNCH AND TLI, THE OTHER COMPRESSOR WILL NATURALLY BE SOMEWHAT SUSPECT. IN ADDITION, IT IS CONSIDERED UNDESIRABLE TO COMMIT TO A LUNAR MISSION WITH ONLY ONE SUIT COMPRESSOR. AFTER TLI, ONLY ONE SUIT COMPRESSOR IS REQUIRED TO INITIATE AND CONTINUE ALL MISSION PHASES. IF THE REMAINING COMPRESSOR AND THE VACUUM CLEANER ARE LOST, AN ARRANGEMENT CAN BE MADE USING THE SUIT HOSES AND THEIR INTERCONNECTS TO ALLOW THE LM SUIT FANS TO PUMP O2 THROUGH THE CM SUIT LOOP FOR CO2 AND WATER REMOVAL. CSM POWER OR LM POWER MAY BE USED TO POWER THE LM SUIT FANS UNDER THIS ARRANGEMENT IF THE LM DESCENT STAGE IS STILL ATTACHED. THIS CONFIGURATION SHOULD PROVIDE ADEQUATE CO2 REMOVAL TO ALLOW SAFE TERMINATION OF THE MISSION. FOR LOSS OF BOTH SUIT COMPRESSORS AND THE VACUUM CLEANER, THE LM DESCENT STAGE WILL BE RETAINED FOR TEI IF POSSIBLE. IF THE DESCENT STAGE CANNOT BE RETAINED, THE ASCENT STAGE WILL BE RETAINED.

(K) SUIT CIRCUIT - THE SUIT CIRCUIT IS REQUIRED TO INITIATE AND CONTINUE ALL MISSION PHASES. IF THE SUIT CIRCUIT IS LOST, THE CAPABILITY TO PROVIDE CO2 REMOVAL AND WATER REMOVAL IS LOST. LOSS OF CO2 REMOVAL PLACES THE CREW IN A HAZARDOUS ENVIRONMENT, AND CONSEQUENTLY THE MISSION MUST BE TERMINATED. (IT MAY BE DESIRABLE TO UTILIZE LM SYSTEMS IN A MANNER SIMILIAR TO THAT DESCRIBED IN "J" ABOVE.) IF POSSIBLE, THE LM WILL BE RETAINED FOR TEI TO UTILIZE THE LM SUIT CIRCUIT DURING TRANSEARTH COAST. AN EVALUATION OF THE CAPABILITY REMAINING IN THE LM ASCENT STAGE AND THE FAILURE WHICH CAUSED LOSS OF THE SUIT CIRCUIT WILL BE MADE TO DETERMINE WHETHER OR NOT IT IS ADVANTAGEOUS TO RETAIN THE LM ASCENT STAGE ONLY FOR TEI.

2. OVERBOARD DUMPS- AT LEAST ONE OVERBOARD DUMP IS REQUIRED TO CONTINUE EARTH ORBIT, TO INITIATE TLI, TO CONTINUE TLC AND TO INITIATE LOI. THESE PHASES WILL BE TERMINATED BECAUSE ONE DUMP IS NECESSARY TO ALLOW DUMPING OF WASTE WATER (INCLUDING FUEL CELL WATER PRODUCTION) AND TO ALLOW DISPOSAL OF URINE.

AFTER LOI HAS BEEN PERFORMED, THE NOMINAL MISSION WILL BE CONTINUED WITH LOSS OF ALL OVERBOARD DUMPS. THE FLUID STORAGE CAPACITY OF THE CSM (WHICH INCLUDES FIVE-ONE GALLON BAGS, 3 UTS'S AND 3 UCTA'S) COUPLED WITH FORCED WATER BOILING TO MANAGE FUEL CELL WATER PRODUCTION, SHOULD ALLOW ACCOMPLISHMENT OF A NOMINAL LUNAR STAY.

R	ITEM

3. CRYOGENIC STORAGE SYSTEM

OXYGEN STORAGE TANKS-- HYDROGEN STORAGE TANKS - FOR EARTH ORBIT THE MISSION WILL BE CONTINUED WITH A MINIMUM OF ONE O2 TANK AND ONE H2 TANK, SO LONG AS SUFFICIENT QUANTITY REMAINS IN THE TANK TO ALLOW MISSION CONTINUATION. THIS CAN BE DONE BECAUSE ENTRY AREAS ARE ALWAYS READILY AVAILABLE IF THE REMAINING TANK IS LOST (WITHIN 1 OR 2 HOURS).

ALL OTHER MISSION PHASES - HYDROGEN - BOTH H2 TANKS ARE REQUIRED TO INITIATE AND CONTINUE ALL MISSION PHASES (EXCEPT PDI). THIS REQUIREMENT EXISTS BECAUSE - (1) LOSS OF THE REMAINING TANK RESULTS IN LOSS OF THE FUEL CELLS PLACING ALL POWER REQUIREMENTS ON THE SM AUX BATTERY AND ENTRY BATTERIES (THESE POWER SOURCES ARE SUFFICIENT FOR LOW POWER LEVEL RETURNS, ONLY). (2) ALTHOUGH SUFFICIENT H2 IS MAINTAINED IN EACH TANK TO ALLOW AT LEAST A POWERED DOWN, SAFE RETURN TO EARTH, SUFFICIENT QUANTITY IS NOT AVAILABLE TO PERMIT MISSION CONTINUATION. ONCE POWERED DESCENT HAS BEEN INITIATED, THAT PHASE WILL BE CONTINUED TO ALLOW A LUNAR LANDING WITH A LUNAR STAY FOR A DURATION OF ONE CSM REVOLUTION (T3), THE POWERED DESCENT PHASE IS TOO SHORT TO PERMIT ADEQUATE SYSTEMS ANALYSIS AND THE ADDITIONAL TIME INVOLVED IN LANDING WITH A T3 LIFTOFF DOES NOT SIGNIFICANTLY INCREASE THE TOTAL MISSION TIME.

ESSENTIALLY, THE SAME RATIONALE APPLIES TO OXYGEN EXCEPT THAT THE OXYGEN SUBSYSTEM HAS THREE TANKS. THE AMOUNT OF OXYGEN AVAILABLE IS ALMOST DOUBLE THE NOMINAL MISSION REQUIREMENTS. SINCE TWO TANKS (TANKS 1+2) CAN MEET MISSION OXYGEN REQUIREMENTS WITH AMPLE MARGINS, IT IS APPARENT THAT LOSS OF ONE TANK (PARTICULARLY, TANK 3) COULD BE SUSTAINED WITHOUT SIGNIFICANTLY AFFECTING THE CAPABILITY TO PERFORM THE NOMINAL MISSION. FOR THESE REASONS CONSIDERATION WILL BE GIVEN TO CONTINUING THE MISSION AFTER TLI WITH THIS FAILURE IF SYSTEM INTEGRITY REMAINS.

IN BOTH H2 AND O2 SYSTEMS, REDLINES ARE BASED ON LOSS OF A SINGLE TANK - THUS, THE OXYGEN REDLINES ARE BASED ON THE TWO LOWEST TANKS HOWEVER, NOMINALLY EITHER TANK 1 OR TANK 2 WILL HAVE SUFFICIENT QUANTITY TO ALLOW A SINGLE TANK RETURN.

4. ELECTRICAL POWER SYSTEM

(A) FUEL CELLS - TWO FUEL CELLS ARE REQUIRED TO CONTINUE EARTH ORBIT. TWO FUEL CELLS ARE ADEQUATE TO PROVIDE ALL NOMINAL FUEL CELL FUNCTIONS-- HOWEVER, ONE FUEL CELL CAN ONLY SUPPLY A SEVERELY POWERED DOWN OPERATION, ELSE BATTERY SUPPLEMENT WILL BE REQUIRED. ADDITIONALLY, FAILURE OF TWO FUEL CELLS SEVERELY UNDERMINES THE CONFIDENCE IN THE REMAINING FUEL CELL, AND FAILURE OF THE REMAINING FUEL CELL WOULD REQUIRE AN ASAP ENTRY USING THE AUX BATTERY AND ENTRY BATTERIES.

ALL THREE FUEL CELLS ARE REQUIRED TO INITIATE TLI. EVEN THOUGH TWO FUEL CELLS CAN SUSTAIN ALL NOMINAL FUEL CELL REQUIREMENTS, IT IS CONSIDERED UNDESIRABLE TO COMMIT TO A LUNAR MISSION WITHOUT FULL ELECTRICAL POWER CAPABILITY.

FROM TLI THROUGH PDI INITIATION CONSIDERATION WILL BE GIVEN TO CONTINUING THE MISSION IF ONE FUEL CELL HAS BEEN LOST. IF THE FAILURE IS A RANDOM FAILURE, THE MISSION WILL BE CONTINUED SINCE TWO FUEL CELLS CAN SUSTAIN NOMINAL REQUIREMENTS. IF THE FAILURE IS A TYPE WHICH WOULD LEAD TO SERIOUS SUSPICION OF THE INTEGRITY OF THE TWO REMAINING FUEL CELLS, THE MISSION WILL BE TERMINATED.

ONCE POWERED DESCENT HAS BEEN INITIATED, IT WILL BE CONTINUED AND SO LONG AS ONE FUEL CELL REMAINS LUNAR STAY NEED NOT BE TERMINATED UNTIL T3.

(B) ENTRY BATTERIES - TWO ENTRY BATTERIES ARE REQUIRED TO CONTINUE EARTH ORBIT. THIS IS NECESSARY BECAUSE, ALTHOUGH EARTH ORBIT COULD BE CONTINUED ON ONE BATTERY AND A SAFE ENTRY PERFORMED, FAILURE OF THE REMAINING BATTERY WILL LEAVE THE SPACECRAFT INCAPABLE OF PERFORMING AN ENTRY.

THREE ENTRY BATTERIES ARE REQUIRED TO INITIATE TLI. ALTHOUGH TWO BATTERIES WITH THE BATTERY CHARGER CAN PROVIDE ALL BATTERY REQUIREMENTS, IT IS CONSIDERED UNDESIRABLE TO COMMIT TO A LUNAR MISSION WITHOUT FULL ELECTRICAL POWER CAPABILITY.

ONCE TLI HAS BEEN PERFORMED, CONSIDERATION WILL BE GIVEN TO CONTINUING ALL MISSION PHASES WITH TWO ENTRY BATTERIES. IF THE FAILURE IS JUDGED TO BE A RANDOM FAILURE, THE MISSION WILL BE CONTINUED SINCE ALL MISSION REQUIREMENTS CAN BE SUPPLIED BY TWO BATTERIES AND THE BATTERY CHARGER. IF THE FAILURE IS SUCH THAT THE INTEGRITY OF THE OTHER TWO BATTERIES IS SUSPECT, THEN THE MISSION WILL BE TERMINATED TO MINIMIZE THE REMAINING MISSION TIME AND REDUCE THE RISK OF LOSING THE TWO REMAINING BATTERIES PRIOR TO ENTRY.

R	ITEM

(C) MAIN BUSES-- BATTERY BUSES-- AC BUSES-- AND PHASE A OF AC BUSES - ALTHOUGH ALL ESSENTIAL FUNCTIONS DERIVE POWER FROM REDUNDANT SOURCES, LOSS OF ANY ONE OF THESE BUSES WILL RESULT IN LOSS OF SOME VERY USEFUL FUNCTIONS AND, MORE IMPORTANT, WILL RESULT IN A SPACECRAFT CONDITION SUCH THAT ONE ADDITIONAL FAILURE WILL RENDER THE SPACECRAFT INCAPABLE OF RETURNING THE CREW TO EARTH. IT SHOULD BE NOTED THAT THE ADDITIONAL FAILURE NECESSARY FOR THIS CONDITION IS NOT LIMITED TO LOSS OF THE REMAINING BUS SINCE SOME OF THE SPACECRAFT CONTROL PROPULSION SYSTEMS ARE REDUNDANT BUT EACH OF THE REDUNDANT SYSTEMS HAS A SINGLE ELECTRICAL POWER SOURCE. CONSEQUENTLY, ALL MISSION PHASES WILL BE TERMINATED IF ANY ONE OF THE LISTED BUSES IS LOST. IF POSSIBLE, THE LM DESCENT STAGE WILL BE RETAINED FOR TEI AND THE DESCENT PROPULSION SYSTEM WILL BE USED TO PERFORM THE TEI BURN. THIS IS DONE TO PROTECT AGAINST THE EFFECT OF A SINGLE FAILURE DURING THE TEI BURN WHICH WOULD EITHER LEAVE THE SPACECRAFT INCAPABLE OF COMPLETING THE BURN OR LEAVE THE SPACECRAFT IN AN UNCONTROLLABLE CONDITION. THE LM ASCENT STAGE WILL BE RETAINED FOR TEI FOR LOSS OF A MAIN BUS OR AC BUS AS A BACKUP ELECTRICAL POWER SOURCE AND FOR TRACKING, COMMUNICATIONS, ATTITUDE CONTROL FOR ENTRY AND MCC CAPABILITIES WHICH WOULD BE LOST IN THE CSM IN THE EVENT OF ANOTHER BUS FAILURE.

(D) BATTERY RELAY BUS - THE BATTERY RELAY BUS IS REQUIRED TO CONTINUE EARTH ORBIT, TO INITIATE AND CONTINUE TRANSLUNAR COAST, TO INITIATE AND CONTINUE LUNAR ORBIT, TO INITIATE PDI, AND TO CONTINUE LUNAR STAY. IF THE BATTERY RELAY BUS IS LOST, THE CAPABILITY TO SWITCH FUEL CELLS, INVERTERS AND THE AUX BATTERY ON AND OFF BUSES AND THE OVERCURRENT/OVERVOLTAGE PROTECTION IS LOST. TO CONTINUE THE MISSION WITH THIS CONDITION IS CONSIDERED UNSATISFACTORY, PARTICULARLY IN LIGHT OF PROBABLE FUEL CELL SWITCHING REQUIREMENTS AS DEMONSTRATED BY THE FUEL CELL ANOMALIES DURING APOLLO 7, 9, AND 10 MISSIONS. ALSO, THE LOSS OF SWITCHING CAPABILITY LEAVES THE SPACECRAFT IN A CONDITION WHERE A SINGLE FAILURE (THE POSSIBLE SINGLE FAILURES ARE GREATLY INCREASED IN THIS CONDITION) CAN RESULT IN LOSS OF THE BUS OR, AS IN THE CASE OF SHORTED BUSES, CAN RESULT IN LOSS OF AN AC BUS, A MAIN DC BUS, AND TWO FUEL CELLS.

(E) INVERTERS - ALL MISSION PHASES WILL BE CONTINUED SO LONG AS TWO INVERTERS REMAIN OPERABLE. TWO INVERTERS CAN SUPPLY ALL SPACECRAFT AC LOADS WITH REDUNDANT AND SEPARATE SOURCES FOR THE TWO AC BUSES. IF ONE ADDITIONAL INVERTER IS LOST, THE REMAINING INVERTER CAN SUPPLY ALL AC LOADS ON BOTH AC BUSES NECESSARY FOR A SAFE RETURN TO EARTH. CONTINUING THE MISSION ON A SINGLE INVERTER IS NOT CONSIDERED DESIRABLE BECAUSE AFTER LOSS OF TWO INVERTERS THE REMAINING INVERTER BECOMES SUSPECT, AND LOSS OF THE THIRD INVERTER WILL RENDER THE SPACECRAFT INCAPABLE OF PERFORMING A SAFE RETURN TO EARTH. IF TWO INVERTERS ARE LOST THE LM DESCENT STAGE WILL BE RETAINED FOR TEI IF POSSIBLE, AND THE DESCENT PROPULSION SYSTEM WILL BE USED TO PERFORM THE TEI BURN. THIS IS DONE TO PROTECT AGAINST THE POSSIBILITY OF LOSS OF THE REMAINING INVERTER DURING THE TEI BURN. THE LM ASCENT STAGE WILL BE RETAINED FOR TEI FOR THE SAME REASONS IN (C) ABOVE.

5. DOCKING SYSTEM

(A) DOCKING LATCHES - TO REMAIN DOCKED FOR INACTIVE MISSION PHASES REQUIRES AT LEAST THREE GOOD DOCKING LATCHES LOCATED 120 DEG. APART OR THE STRUCTURAL EQUIVALENT. INDICATIONS ARE THAT THREE LATCHES SO LOCATED CAN MAINTAIN TUNNEL PRESSURE AND SUSTAIN THE LOADS ASSOCIATED WITH RCS MANEUVERS AND ATTITUDE CONTROL.

TO PERFORM ANY DOCKED SPS BURN OR DPS BURN REQUIRES AT LEAST NINE GOOD DOCKING LATCHES. THIS NUMBER OF LATCHES CAN SUSTAIN ALL NOMINAL LOADS ON THE INTERFACE ASSOCIATED WITH MAJOR BURNS WHEREAS ANY FEWER LATCHES SIGNIFICANTLY INCREASES THE POSSIBILITY OF STRUCTURAL FAILURE.

(B) GN2 BOTTLES - TO UNDOCK REQUIRES THAT AT LEAST TWO GN2 BOTTLES IN THE DOCKING SYSTEM BE AVAILABLE FOR REDOCKING. TO PERMIT UNDOCKING, REASONABLE ASSURANCE MUST BE AVAILABLE THAT REDOCKING CAN BE ACCOMPLISHED. BASED ON THE FAILURE MODE, CONSIDERATION WILL BE GIVEN TO UNDOCKING WITH ONE GN2 BOTTLE. THAT IS, IF THE FAILURE WHICH HAS RESULTED IN A ONE-BOTTLE REDOCKING CAPABILITY IS THE RESULT OF AN ELECTRICAL FAILURE IN ONE SYSTEM (DISCOVERED AT TD&E, THUS REQUIRING THE USE OF A THIRD BOTTLE), THEN UNDOCKING WOULD BE PERFORMED WITH ONLY ONE BOTTLE REMAINING. CONVERSELY, IF THE FAILURES WHICH RESULT IN ONE-BOTTLE CAPABILITY ARE THE RESULT OF SEPARATE FAILURES OF TWO GN2 BOTTLES, UNDOCKING WILL NOT BE PERFORMED BECAUSE THE REMAINING BOTTLE IS SUSPECT.

R	ITEM

6. SEQUENTIAL SYSTEM

(A) SMJC NOT ACTIVATED - IF THE SERVICE MODULE JETTISON CONTROLLER (SMJC) ACTIVATES PREMATURELY, IT WILL SHUT DOWN AUTOMATICALLY IN 25 SEC. THE MISSION WILL BE CONTINUED IF THE SOURCE OF ACTIVATION CAN BE DETERMINED AND ISOLATED. IF THE SOURCE OF ACTIVATION CANNOT BE ISOLATED, THEN THE RATIONALE OF (B) APPLIES.

(B) SEQUENTIAL SYSTEMS - TO CONTINUE EARTH ORBIT, TO INITIATE TLI, TO CONTINUE TLC, AND TO INITIATE LOI REQUIRES THAT BOTH SEQUENTIAL SYSTEMS BE OPERABLE. TO CONTINUE THE MISSION INTRODUCES THE RISK OF A SINGLE FAILURE LEAVING THE SPACECRAFT INCAPABLE OF PERFORMING ENTRY. ONCE LUNAR ORBIT HAS BEEN ACHIEVED, THE MISSION WILL BE CONTINUED WITH FAILURE OF ONE SEQUENTIAL SYSTEM. THIS WILL BE DONE BECAUSE THE LIKELIHOOD OF A FAILURE IN THE REMAINING SYSTEM IS ASSOCIATED WITH THE MEAN TIME BEFORE FAILURE PROBABILITY DEVELOPED IN THE INTRODUCTION, AND THE SEQUENTIAL SYSTEM IS INACTIVE IN LUNAR ORBIT EXCEPT FOR DOCKING AND LM FINAL SEPARATION. SINCE THE RETURN TO EARTH TIMES ARE LENGTHY, THE SLIGHT ADDITIONAL RISK ASSOCIATED WITH CONTINUING THE MISSION WITH THIS CONDITION IS OFFSET BY THE VALUE OF THE OBJECTIVES WHICH CAN BE OBTAINED.

7. INSTRUMENTATION SYSTEM

(A) CRITICAL INSTRUMENTATION - CRITICAL INSTRUMENTATION IS DEFINED AS THAT INSTRUMENTATION, EITHER TELEMETERED OR ONBOARD, REQUIRED TO DETERMINE THE GO/NO-GO STATUS OF THE SPACECRAFT. CRITICAL INSTRUMENTATION INCLUDES THE PRIMARY INSTRUMENTATION WHICH IS THE DIRECT MEANS OF DETERMINING THE STATUS OF A PARTICULAR FUNCTION AS WELL AS SECONDARY INSTRUMENTATION WHICH IS THE INDIRECT MEANS OF DETERMINING THE STATUS OF A FUNCTION. TO LOSE CRITICAL INSTRUMENTATION REQUIRES THE LOSS OF MORE THAT ONE PARAMETER. ALTHOUGH GROUPING OF PARAMETERS TO SPECIFICALLY DEFINE CRITICAL INSTRUMENTATION HAS NOT BEEN ATTEMPTED BECAUSE OF THE ALMOST LIMITLESS POSSIBLE COMBINATIONS, IT IS, NEVERTHELESS, RECOGNIZED THAT, AT SOME POINT AFTER A CONTINUOUS PROGRESSION OF INSTRUMENTATION FAILURES, SUFFICIENT INSTRUMENTATION WILL NOT BE AVAILABLE TO DETERMINE SYSTEMS STATUS. ONE READILY RECOGNIZED GROUP OF CRITICAL INSTRUMENTATION IS THAT GROUP OF PARAMETERS SIGNAL CONDITIONED BY THE COLD-PLATED SCE.

TO CONTINUE EARTH ORBIT INITIATE TLI, LOI, CIRC OR CONTINUE LUNAR ORBIT AND LUNAR STAY REQUIRES THAT CRITICAL INSTRUMENTATION BE AVAILABLE. THIS IS DONE BECAUSE IT IS CONSIDERED UNSAFE TO CONTINUE THE MISSION WITHOUT THE ABILITY TO DETERMINE SYSTEMS STATUS.

ONCE TLI HAS BEEN PERFORMED, TLC WILL BE CONTINUED TO PERFORM A FLYBY AND RETURN TO EARTH. CONTINUING THE MISSION IN THIS CONFIGURATION IS CONSIDERED MORE DESIRABLE THAN A DIRECT ABORT. ALSO, CONTINUING TLC REPRESENTS A STEADY STATE OPERATION WHICH IS THE CONDITION WHERE ANOMALIES ARE LEAST LIKELY TO OCCUR, AS OPPOSED BY THE PERTURBATION ON SPACECRAFT SYSTEMS IMPOSED ON SPACECRAFT SYSTEMS BY THE DIRECT ABORT SPS BURN.

ONCE DOI HAS BEEN PERFORMED THE MISSION WILL BE CONTINUED TO ALLOW A LUNAR LANDING WITH A LUNAR STAY OF THE DURATION OF ONE CSM LUNAR ORBIT. THIS IS DONE BECAUSE THE LOSS OF INSTRUMENTATION ITSELF DOES NOT PRESENT A HAZARD TO THE CREW EXCEPT WHEN COMPOUNDED BY ACTUAL SYSTEMS FAILURES. THE LIKELIHOOD OF A COMPOUNDING SYSTEM FAILURE IS ASSOCIATED WITH THE MEAN TIME BEFORE FAILURE PROBABILITY DEVELOPED IN THE INTRODUCTION.

(B) CSM TELEMETRY - CSM TELEMETRY, EITHER HIGH BIT RATE OR LOW BIT RATE, IS REQUIRED FOR ALL MISSION PHASES, EXCEPT THAT ONCE CIRC HAS BEEN PERFORMED THE MISSION WILL BE CONTINUED TO INCLUDE A LUNAR LANDING AND A LUNAR STAY OF THE DURATION OF ONE CSM LUNAR ORBIT. TELEMETRY IS NECESSARY TO CONTINUE THE MISSION (EVEN THOUGH MOST CRITICAL PARAMETERS ARE DISPLAYED ONBOARD) BECAUSE IT IS NECESSARY TO RELIEVE THE CREW OF THE CONTINUOUS DUTY OF MONITORING SPACECRAFT SYSTEMS. DURING HIGH ACTIVITY PERIODS AND SLEEP PERIODS THE CREW CANNOT REASONABLY PERFORM THESE TASKS. HOWEVER-- ONCE CIRC HAS BEEN PERFORMED, A RENDEZVOUS IS NECESSARY. TO ALLOW A LUNAR LANDING WITH A LUNAR STAY WITH DURATION OF ONE CSM LUNAR ORBIT ADDS LITTLE TO TOTAL MISSION TIME AND THE OBJECTIVES WHICH CAN BE ACHIEVED BY A LUNAR LANDING MAKES IT WORTHWHILE TO CONTINUE.

R	ITEM	

CSM G&C AND PROPULSION RATIONALE

THE FOLLOWING IS THE RATIONALE FOR THE CSM G&C AND PROPULSION MISSION RULES. THIS INCLUDES SECTIONS 15, 16, 17, AND 18 OF THE APOLLO 14 MISSION RULES.

15-1 LAUNCH

THE MOST IMPORTANT FUNCTION OF THE GUIDANCE AND CONTROL SYSTEM IS TO PROVIDE FOR SAFE RETURN OF THE CREW. THIS INVOLVES THE CAPABILITY TO EFFECT A DEORBIT. THERE IS NO SINGLE FAILURE NOR REASONABLE COMBINATION OF FAILURES IN THE GUIDANCE AND CONTROL SYSTEM WHICH PRECLUDE A DEORBIT. THERE ARE FAILURES WHICH WILL CAUSE A DEGRADED METHOD OF CONTROL FOR THE DEORBIT MANEUVER AND SUBSEQUENT ENTRY-- HOWEVER, THIS SUBJECTS THE CREW TO LESS OVERALL POTENTIAL HAZARD THAN A LAUNCH ABORT. IN ADDITION, THE MAJORITY OF THE GUIDANCE AND CONTROL SYSTEM IS IN A PASSIVE OR MONITORING STATE DURING THE LAUNCH PHASE, THUS MAKING IT DIFFICULT, AND IN SOME CASES IMPOSSIBLE, TO DETECT AND ISOLATE FAILURES.

15-2 EARTH ORBIT

TO REMAIN IN ORBIT, THE GUIDANCE AND CONTROL SYSTEM MUST ALWAYS PROVIDE A MINIMUM OF THREE BASIC THINGS--- ADEQUATE ATTITUDE CONTROL OF THE SPACECRAFT, SPS DEORBIT, AND ONE BACK-UP DEORBIT METHOD (SM OR HYBRID). ADEQUATE ATTITUDE CONTROL CONSISTS OF DIRECT RCS AND RATE DAMPING IN EACH AXIS AS A MINIMUM. DIRECT RCS IS THE REDUNDANT BACKUP RCS CONTROL MODE OPERATED FROM PARALLEL HARD STOP SWITCHES IN EITHER RHC. IT CONTROLS AN INDEPENDENT SET OF RCS VALVE CONTROL COILS, THUS PROVIDING A CONTROL PATH TO THE THRUSTERS THAT IS INDEPENDENT OF ANY AUTO CONTROL. IT IS THE PRIMARY (AND FOR CERTAIN FAILURES THE ONLY) METHOD OF RECOVERY FROM AUTOMATIC CONTROL SYSTEM MALFUNCTIONS. RATE DAMPING IS CONSIDERED THE MINIMUM ACCEPTABLE CAPABILITY FOR EXTENDED OPERATION OF THE CONTROL SYSTEM. OPERATION OF THE CONTROL SYSTEM WITH NO RATE INPUTS DOES NOT PROVIDE A WELL BEHAVED VEHICLE, GENERALLY REQUIRES CONSIDERABLE CREW ATTENTION, AND IN THE PRESENCE OF DISTURBING FORCES CAN CAUSE EXCESSIVE PROPELLANT CONSUMPTION. RATE DAMPING IS NOT MANDATORY FOR VEHICLE ATTITUDE CONTROL (E.G. SCS MINIMUM IMPULSE IS ADEQUATE AND USES LITTLE PROPELLANT), BUT IS A PREREQUISITE FOR MOST MISSION ACTIVITIES REQUIRING ATTITUDE CONTROL. RATE DAMPING CAN BE PROVIDED BY EITHER THE SCS USING REDUNDANT BMAGS AS THE RATE DATA SOURCE OR THE CMC RCS DAP USING THE ISS AS THE RATE DATA SOURCE.

THERE ARE THREE BASIC TECHNIQUES AVAILABLE FOR DEORBIT-- SPS, SM RCS AND HYBRID. THERE ARE REASONS OTHER THAN GUIDANCE AND CONTROL PROBLEMS FOR NOT BEING ABLE TO ACCOMPLISH A PARTICULAR DEORBIT METHOD. HOWEVER, AT LEAST SPS DEORBIT AND ONE OF THE OTHER TWO DEORBIT METHODS MUST BE AVAILABLE TO STAY IN ORBIT-- AND WHICHEVER ARE APPLICABLE, THE GUIDANCE AND CONTROL SYSTEM MUST SUPPORT.

THE PRIMARY METHOD OF DEORBIT IS THE SPS. TO BURN THE SPS, THE CONTROL SYSTEM MUST PROVIDE A SERVO LOOP IN PITCH AND YAW TO GIMBAL THE ENGINE AND A CONTROL MODE TO PROVIDE INPUTS TO THE SERVO LOOP. THERE ARE TWO COMPLETELY REDUNDANT (INCLUDING POWER SUPPLIES) SERVO LOOPS IN EACH AXIS. THERE ARE FOUR METHODS OF PROVIDING INPUTS TO THE SERVO LOOPS--- CMC (TVC DAP), SCS AUTO, MTVC RATE COMMAND AND MTVC ACCEL COMMAND. MTVC ACCEL COMMAND IS NOT AN ACCEPTABLE MODE OF TVC DUE TO THE LACK OF RATE DAMPING CIRCUITRY. THE UNACCEPTABILITY OF THIS MODE HAS BEEN DEMONSTRATED IN CSM SIMULATORS AND MISSION EVALUATORS.

R	ITEM
	15-2 CONT

THE PRIMARY METHOD OF BACKUP DEORBIT IS THE SM RCS. THE SECONDARY METHOD IS A HYBRID USING SM RCS FIRST, AND THEN CM RCS. BOTH METHODS REQUIRE THE ABILITY TO DO RATE DAMPED TRANSLATIONS WITH THE SM RCS. THE THC IS NECESSARY FOR THE TRANSLATION COMMANDS, AND THE RATE DAMPING MAY BE PROVIDED BY EITHER THE SCS OR THE CMC (RCS DAP). DIRECT ULLAGE AND ATTITUDE HOLD WITH DIRECT RCS IS NOT CONSIDERED AN ADEQUATE METHOD OF ACCOMPLISHING TRANSLATIONS DUE TO HIGHER PROPELLANT CONSUMPTION AND PILOT VARIABILITY AFFECTING THAT CONSUMPTION. BOTH METHODS ALSO REQUIRE AN ONBOARD ATTITUDE REFERENCE. FOR MOST RCS DEORBITS, A LIGHTED HORIZON IS NOT AVAILABLE FOR SEVERAL REASONS. THE BURN ARC IS EXTREMELY LONG, THE ENTRY FLIGHT PATH ANGLE IS SHALLOW, AND IF DAYLIGHT REQUIREMENTS IN THE RECOVERY AREAS ARE MAINTAINED (PLUS THE FACT THE MANEUVER MUST BE DONE AT APOGEE DUE TO PROPELLANT RESTRICTIONS) THE MANEUVER MAY WELL BE ENTIRELY OR PARTIALLY WITHOUT A HORIZON REFERENCE. THE ONBOARD ATTITUDE REFERENCE MAY BE PROVIDED BY IMU OR THE GDC AND ON EITHER FDAI. RATES AND ATTITUDE ERRORS ARE DESIRABLE, BUT NOT MANDATORY. THE HYBRID METHOD REQUIRES SEVERAL ADDITIONAL EQUIPMENTS, ALL CONNECTED WITH THE CM PORTION OF THE MANEUVER. THE RATE DAMPING MUST BE SCS BECAUSE THERE IS NO RCS DAP FOR THE CM (NOTE THE SM RCS DAP COULD BE USED-- HOWEVER, ITS KNOWLEDGE OF THE MASS AND INERTIA IS RESTRICTED TO THE CSM, AND HENCE, ITS ABILITY TO PROVIDE RATE DAMPED ATTITUDE HOLD IS SLOPPY AT BEST). THE TECHNIQUE DOES NOT CONTINUALLY APPLY THRUST IN A CONSTANT DIRECTION.

TO DETERMINE THE DELTA V TO APPLY, A CMC DISPLAY OF PERIGEE ALTITUDE IS MONITORED, AND THE BURN IS TERMINATED WHEN PERIGEE IS N.M. THIS, IN TURN, REQUIRES THE IMU TO SENSE THE DELTA V, THE CMC TO NAVIGATE, AND EITHER DSKY (BOTH ENCODER AND DECODER) TO PROVIDE CONTROL OF AND DISPLAYS FROM THE CMC. IT IS POSSIBLE, PROVIDED THE PRESCRIBED ATTITUDES ARE MAINTAINED, TO DO THE CM PORTION ON TIME ONLY. THE PREFERRED METHOD USES THE CMC, HOWEVER. BOTH RHC'S ARE REQUIRED TO MAINTAIN PITCH ATTITUDE WHILE FIRING THE OPPOSING PITCH JET TO OBTAIN THE DELTA V. AGAIN, AN ALTERNATE TECHNIQUE EXISTS USING ONLY 1 RHC AND ''WOBBLING'' THE S/C ACRUSS THE DESIRED PITCH ATTITUDE BY FIRING FIRST PLUS THEN MINUS PITCH. THE 2 RHC METHOD IS PREFERABLE.

THERE ARE TWO INDEPENDENT WAYS TO OBTAIN ULLAGE-- ONE USING THE SCS OR CMC (RCS DAP), AND THE OTHER USING THE DIRECT ULLAGE PUSHBUTTON. THE FORMER USES THE THC (+X) FOR THE ULLAGE COMMANDS AND THE AUTO RCS COILS, WHILE THE LATTER USES THE DIRECT ULLAGE PUSHBUTTON AND THE DIRECT RCS COILS. ALL NON-CRITICAL SPS BURNS AFTER THE STORAGE TANKS ARE EMPTY REQUIRE THE GUIDANCE AND CONTROL SYSTEM PROVIDE AN ULLAGE TO SETTLE PROPELLANTS IN THE SUMP TANKS, THEREBY PRECLUDING HELIUM INGESTION INTO THE BALL VALVE/ENGINE DISCUSSION OF THIS SUBJECT).

THE TLI GO/NO GO DECISION IS ESSENTIALLY A COMMITMENT TO ALLOW THE SPACECRAFT TO BE SUBJECTED TO A HIGH SPEED ENTRY, AND TO SUSTAINED SYSTEMS OPERATION. SPS CONTROL REDUNDANCY IS REQUIRED TO ASSURE THAT ABORT AND MCC CAPABILITY IS AVAILABLE FOR THE TRANSLUNAR AND TRANSEARTH COAST PHASES. LM CAPABILITY IS NOT CONSIDERED IN THE TLI COMMITMENT BECAUSE IT COULD POSSIBLY NOT BE AVAILABLE IF TD&E IS NOT ACCOMPLISHED, AND BECAUSE THE LM IS NOT CHECKED OUT PRE-TLI. THE GUIDANCE AND CONTROL SYSTEMS MUST THEREFORE PROVIDE TWO GOOD SERVO LOOPS, AND TVC CONTROL VIA BOTH THE CMC (DAP) AND THE SCS. BOTH CMC AND SCS TVC ARE REQUIRED, BECAUSE THE SCS TVC MODES ARE NOT ENTIRELY INDEPENDENT OF SINGLE POINT FAILURES (E.G. LOSS OF AC2 PHI A CAUSES LOSS OF RATE CMD, ACCEL CMD, AND SEVERELY DEGRADES SCS AUTO TVC).

DIRECT RCS AND RATE DAMPING ARE NEEDED FOR THE SAME REASONS AS LISTED IN THE EARTH ORBIT PHASES. THE ABILITY TO MAINTAIN AUTOMATIC PASSIVE THERMAL CONTROL SHOULD ALSO BE AVAILABLE (ATTITUDE HOLD IN PITCH AND YAW). EITHER CMC (DAP) OR SCS PTC IS ACCEPTABLE.

THE G&N IS THE PRIME NAVIGATION AND CONTROL SYSTEM, AND, AS SUCH MUST BE FULLY OPERATIONAL PRIOR TO COMMITTING TO A HIGH SPEED ENTRY. TO PROVIDE HIGH SPEED ENTRY CAPABILITY, THE CMC MUST BE OPERABLE TO PROCESS THE INERTIAL INFORMATION OBTAINED BY THE ISS. OPTICS, COAS OR OTHER BACK UP METHODS MUST BE AVAILABLE TO PROVIDE ESSENTIAL ALIGNMENT INFORMATION TO ESTABLISH THE ENTRY CORRIDOR AND NECESSARY HIGH SPEED ENTRY ATTITUDE CONTROL. THE MDC DSKY IS REQUIRED TO PROCESS CREW INSTRUCTIONS TO THE CMC. AN OPERATIONAL FLIGHT DIRECTOR ATTITUDE INDICATOR IS REQUIRED TO PROVIDE TLI MONITORING CAPABILITY TO THE CREW.

TWO SOURCES OF ATTITUDE INFORMATION MUST BE AVAILABLE FOR THE HIGH SPEED ENTRY IN ORDER TO COMMIT TO TRANSLUNAR COAST. FOUR DISPLAYS (NOT COMPLETELY INDEPENDENT) ARE AVAILABLE IN THE SPACECRAFT--- THE RSI, TWO FDAI'S AND THE DSKY. THE FOUR DISPLAYS ARE DRIVEN BY THREE SOURCES OF ATTITUDE INFORMATION--- EITHER BMAG PACKAGE OR THE IMU. FAILURES OR COMBINATIONS OF FAILURES THAT CAUSE LOSS OF REDUNDANT MEANS TO DERIVE AND DISPLAY ATTITUDE INFORMATION ARE CAUSE TO INHIBIT TLI. APOLLO 8 CREW REPORTS ARE THAT AN OUT-THE-WINDOW REFERENCE IS NOT AVAILABLE FOR ENTRY.

R	ITEM	
	15-3	TRANSLUNAR COAST ONCE TLI HAS BEEN PERFORMED, THE MINIMUM REQUIREMENT OF THE G&N IS TO PROVIDE REDUNDANT CAPABILITY TO MAINTAIN A FREE RETURN TRAJECTORY AND PASSIVE THERMAL CONTROL. THIS CAPABILITY IS MET BY REQUIRING RATE DAMPING AND DIRECT RCS IN EACH AXIS PLUS A METHOD OF PROVIDING A PLUS X MANEUVER FOR ULLAGE OR TRANSLATION. THE ATTITUDE CONTROL REQUIREMENTS ASSURE REDUNDANT CAPABILITY TO POSITION THE SPACECRAFT FOR MIDCOURSE CORRECTIONS. DIRECT RCS IS REQUIRED TO PROVIDE BACKUP CONTROL IN THE EVENT OF AUTO COIL MALFUNCTIONS.
	15-4	LOI, LUNAR ORBIT THIS RULE IS WRITTEN TO BE APPLIED WHENEVER CRITICAL SYSTEMS REDUNDANCY IS REQUIRED TO ASSURE SAFE SPACECRAFT RETURN. THE REDUNDANCY REQUIRED BY THIS RULE (E.G. REDUNDANT SPS CONTROL, REDUNDANT ATTITUDE CONTROL, AND NON-CRITICAL BURN CAPABILITY) ASSURES THAT AN ADDITIONAL SINGLE POINT FAILURE WILL NOT COMPROMISE TEI. THE ATTITUDE CONTROL REQUIREMENTS ARE THE MINIMUM TO ASSURE PROPER G&N THRUST VECTOR POSITIONING. TWO SERVO LOOPS AND TWO CONTROL MODES FOR TVC ASSURE REDUNDANCY. OF COURSE, ULLAGE CAPABILITY WILL BE REQUIRED FOR THE TEI BURN SINCE THE STORAGE TANKS WILL BE EMPTY AFTER LOI. ULLAGE VIA THE THC OR DIRECT ULLAGE IS ACCEPTABLE. THE CMC AND ISS ARE REQUIRED FOR PROPER LOI AND TEI CONTROL. THE CAPABILITY TO ALIGN THE PLATFORM MUST BE AVAILABLE IN ORDER TO COMMIT TO LOI.ALIGNING SPECIFICALLY WITH CSM OPTICS IS NOT REQUIRED, AS COAS ALIGNMENTS AND TRANSFERRED ALIGNMENTS FROM LM ARE ACCEPTABLE. ONE FDAI AND ONE DSKY ARE REQUIRED FOR CREW MONITORING OF LOI AND TEI BURNS TO VERIFY SYSTEMS PERFORMANCE. LOSS OF THE ABOVE REDUNDANCY REQUIREMENTS (I.E. SPS CONTROL AND REDUNDANT ATTITUDE CONTROL) IN THE LUNAR ORBIT PHASE WILL REQUIRE PLANNING FOR A DPS TEI MANEUVER. UNDOCKING SHOULD BE INHIBITED AND LM RETAINED. IF LM DPS IS AVAILABLE AND CHECKED OUT, AN EARLY TEI NEED NOT BE ACCOMPLISHED.
	15-5	UNDOCKED TO UNDOCK THE CSM MUST PROVIDE A STABLE PLATFORM FOR REDOCKING PURPOSES. THIS IMPLIES THE GUIDANCE AND CONTROL SYSTEM MUST PROVIDE RATE DAMPED ATTITUDE HOLD. IN CASE THE CSM HAS TO PARTICIPATE IN THE DOCKING, THE CONTROL SYSTEM MUST ALSO BE ABLE TO TRANSLATE IN ALL THREE AXES. DIRECT RCS IS AGAIN REQUIRED FOR RECOVERY FROM AUTO CONTROL SYSTEM MALFUNCTIONS. THE GUIDANCE AND CONTROL SYSTEM MUST PROVIDE THE CAPABILITY TO PERFORM A LM RESCUE PRIOR TO COMMITTING OR CONTINUING THE UNDOCKED AND SUBSEQUENT PHASES. LM RESCUE INVOLVES THE CSM TRACKING THE LM, COMPUTING ITS OWN MANEUVERS AND EXECUTING THEM. THE CSI AND CDH MANEUVERS WILL BE TARGETED FROM THE GROUND. HOWEVER, THE SMALL TIME INTERVAL BETWEEN TPI, EACH MIDCOURSE, AND THE BRAKING MANEUVERS REQUIRE THE CSM TO DO ITS OWN TRACKING, STATE VECTOR UPDATES AND MANEUVER SOLUTIONS. TO TRACK THE LM THE CSM SCT OR SXT MUST BE OPERABLE. THE CSM MUST BE ABLE TO TRACK LM WITH EITHER AUTO OPTICS, MANUAL OPTICS, VHF RANGING, OR MINIMUM IMPULSE ATTITUDE CONTROL (OR SOME COMBINATION OF THESE). THE OPTICS DATA (SHAFT, TRUNNION AND MARK REQUEST) MUST BE INPUT TO THE CMC EITHER AUTOMATICALLY OR MANUALLY. ALTHOUGH CUMBERSOME, THE DATA MAY BE INPUT THROUGH THE DSKY IF NECESSARY, USING AN ALTERNATE LINE OF SIGHT MARK ROUTINE. TO BE OPERATIONAL FOR LM RESCUE, THE LM MUST BE VISIBLE IN EITHER THE SCT OR THE SCT-- THEY MUST BE ABLE TO TRACK THE LM, AND THERE MUST BE A WAY TO GET THE OPTICS DATA INTO THE CMC. A DSKY IS REQUIRED TO OPERATE THE CMC. EITHER DSKY IS ACCEPTABLE SINCE THE CREW HAS SAID THEY CAN OPERATE ANY ACTIVITY FROM EITHER DSKY, EVEN IN THE ONE MAN RESCUE SITUATION. TRANSLATION CAPABILITY, RATE DAMPING AND ASSOCIATED HAND CONTROLLERS ARE NECESSARY FOR OBVIOUS REASONS. EITHER RHC IS SATISFACTORY. THE FDAI IS REQUIRED SINCE RESCUE MANEUVERS MAY NOT HAVE AN EXTERNAL ATTITUDE REFERENCE AVAILABLE. THE CMC AND PLATFORM ARE REQUIRED FOR NAVIGATION, PRETHRUST TARGETING, TPI AND MIDCOURSE RENDEZVOUS SOLUTIONS, AND MANEUVERS. THE GUIDANCE AND CONTROL SYSTEM MUST ALSO PROVIDE THE PREVIOUSLY DEFINED MINIMUM SPS NON-CRITICAL BURN CAPABILITY.
	15-6	ASCENT, DESCENT THE CSM IS A PASSIVE VEHICLE DURING THE DESCENT AND ASCENT PHASES. RENDEZVOUS AND LM RESCUE RATIONALE IS COVERED IN RULE 15-5.

R	ITEM
	15-7

LUNAR STAY PHASE

THIS RULE IS A RELAXATION OF ATTITUDE CONTROL REQUIREMENTS IN THAT TWO AXIS ATTITUDE HOLD AND RATE DAMPING ARE SUFFICIENT TO PERMIT CONTINUATION OF THE LUNAR STAY PHASE. LOSS OF ATTITUDE CONTROL IN AN AXIS REQUIRES MANUAL CONTROL IN THAT AXIS. MANUAL CONTROL OF ONE VICE 3 AXIS AUTO CONTROL DOES NOT SEVERELY HAMPER CREW ACTIVITIES AND DOES NOT AFFECT THE ABILITY TO POSITION THE SPS FOR THE TEI BURN. THIS LOSS DOES CONSTITUTE A REDUCTION IN LM RESCUE CAPABILITY, HOWEVER, TERMINATION OF THE LUNAR STAY PHASE WILL NOT RELIEVE THE REQUIREMENT FOR ONE AXIS MANUAL CONTROL FOR TEI POSITIONING.

REDUNDANT SPS CONTROL IS THE ONLY CSM CONSTRAINT WHICH REQUIRES TERMINATION OF THE LUNAR STAY PHASE. LOSS OF OPTICS AND THE NAV DSKY ARE NOT CONSIDERED CRITICAL IN THAT VHF RANGING AND BACKUP ALIGNMENT TECHNIQUES ARE AVAILABLE FOR PLATFORM ALIGNMENTS AND LM RESCUE.

R	ITEM	
	15-10	ATTITUDE CONTROL IF AT ALL AVOIDABLE, THE LM AND CSM SHOULD NEVER BOTH BE IN ACTIVE ATTITUDE CONTROL AT THE SAME TIME. IF ONE IS IN CONTROL, THE OTHER SHOULD BE IN FREE DRIFT. THE NON-CONTROLLING VEHICLE MAY OR MAY NOT BE POWERED UP. IF IT IS POWERED UP, NO ATTEMPT WILL BE MADE TO ELECTRICALLY ISOLATE ITS CONTROL SYSTEM-- RATHER, IT WILL BE KEPT FROM ANY AUTOMATIC CONTROL BY PROCEDURE (E.G. CMC/FREE, WHEN LM IS CONTROLLING). THE ONLY TIME SIMULTANEOUS ATTITUDE CONTROL BY BOTH VEHICLES IS COMTEMPLATED IS JUST PRIOR TO LM JETTISON. IN THIS CASE, THE CSM SHOULD ALWAYS BE IN A TIGHTER DEADBAND THAN THE LM, THUS INSURING THE MANNED VEHICLE MAINTAINS CONTROL OVER THE COMBINATION. THE LENGTH OF TIME IN THIS CONFIGURATION SHOULD BE MINIMIZED TO AVOID THE CONTROL SYSTEMS FIGHTING EACH OTHER DUE TO INERTIAL REFERENCE DRIFTS, ETC.
	15-11	UPDATING PIPA/IRIG BIAS THE REQUIREMENT FOR UPDATING PIPA BIAS WHENEVER THE ACTUAL VALUE DIFFERED FROM THE PRELAUNCH VALUE BY MORE THAN +/- 0.003 FT/SEC 2 WAS STATED IN THE G&C DIVISION MEMO DATED 27 JUNE 1969. THIS REQUIREMENT IS STILL VALID WITH THE FOLLOWING QUALIFICATIONS (BASED ON APOLLO 11 DATA). PIPA BIAS UPDATE SHOULD BE ATTEMPTED ONLY AFTER THE CSM/LM SEPARATES FROM THE S-IVB AND IS ON COASTING FLIGHT. SHOULD ANY PIPA EXHIBIT NULL COINCIDENCE, NO UPDATE SHOULD BE ATTEMPTED SINCE THE INDICATED BIAS IS ZERO AND THE ACTUAL BIAS VALUE IS NOT KNOWN. THE PRELAUNCH VALUE WILL BE USED UNTIL A VALID PIPA BIAS DRIFT NUMBER IS EMPIRICALLY DETERMINED DURING THE MISSION. THIS ACTION IS BASED ON THE FACT THAT THE PIPAS WILL DRIFT AT A CERTAIN RATE UNDER ''G'' LOADS. THE RATIONALE FOR COMPENSATING THE ISS TO ALLOW FOR IN FLIGHT IRIG DRIFTS IS BASED ON THE G&C DIVISION MEMO DATED 27 JUNE 1969 WHICH REQUIRED AN UPDATE FOR ALL IRIG'S AT THE SECOND P52. DATA COMPILED FOR THE APOLLO 11 MISSION INDICATE THAT UPDATES IN ACCORDANCE WITH THIS MEMO PRODUCED A PLATFORM IRIG COMPENSATION ACCURATE TO 1.5 MERU AND WITHIN THE +/- 3.0 MERU REQUIRED. THE PRESENT UPDATE CRITERIA WERE ARBITRATED VIA THE DATA PRIORITY PANEL OF 15 SEPTEMBER 1969.
	15-12	DELTA V COUNTER DRIFT THE DELTA V COUNTER IS A BACKUP METHOD FOR SHUTTING DOWN G&N CONTROLLED BURNS. BOTH METHODS HAVE A THIRD TOOL FOR SHUTOFF, THAT BEING BURN TIME (PROVIDING NOMINAL THRUST, BURN IS NOT TOO SHORT, ETC.). THE COUNTER RELIES ON A SINGLE ACCELEROMETER, MOUNTED ALONG THE X-AXIS. THE ACCELEROMETER DRIFT WILL BE MEASURED AND USED IN THE COMPUTATION OF THE DELTA VC ENTRY TO THE MANEUVER PAD. FOR SPS BURNS, THE ACCELEROMETER DRIFT IS ONLY APPLICABLE DURING THE PERIOD AFTER THE EMS MODE SWITCH IS PLACED IN THE NORMAL POSITION AND BEFORE SPS THRUST ON, NOMINALLY THIRTY SECONDS. FOR RCS BURNS, THE ACCELEROMETER DRIFT IS APPLICABLE FOR THIRTY SECONDS PLUS THE BURN TIME. THE PHYSICAL PROPERTIES OF THE ACCELEROMETER SUSPENSION ARE SUCH THAT UNDER SPS TYPE ACCELERATIONS, THE BIAS DETERMINED FOR NO OR LOW ACCELERATIONS IS NOT APPLICABEL (I.E. DIFFERENT PORTIONS OF THE BEARING SURFACES ARE IN CONTACT AT HIGHER ACCELERATION LEVELS, IN ADDITION, THE VIBRATION RESULTING FROM SPS THRUSTING TEND TO REDUCE THE DRIFT). PERFORMANCE CHARACTERISTICS OF THE ACCELEROMETER WILL ALSO BE USED TO DEFINE A BROKEN SYSTEM. A MEASURED, REPEATABLE, ZERO-G BIAS OF 0.1 FT/SEC2 IS REPRESENTATIVE OF AN INOPERATIVE ACCELEROMETER (REFERENCE NR INTERNAL LETTER FT/EP-68-127, DATED 12 DEC. 1969). A STANDARD PROCEDURE EXISTS FOR DETERMINING THE ZERO-G BIAS. SINCE THE ACCELEROMETER IS ALSO USED AS THE BASIC INPUT DEVICE FOR THE ENTRY MONITORING SCHEME, THE SAME BIAS TESTS ARE USED TO DETERMINE THE SYSTEMS PERFORMANCE FOR ENTRY.
	15-13	DAP INITIALIZATION THE COLOSSUS TVC DAP KEEPS MUCH BETTER TRACK OF GIMBAL TRIMS AND WEIGHTS THAN ITS PREDECESSOR, SUNDISK. ONCE PROPERLY INITIALIZED, PACTOFF AND YACTOFF ARE UPDATED EVERY PITCH-DAP/YAW-DAP CYCLE (40 OR 80 MS). HENCE, AT CUTOFF, THEY WILL BE CURRENT TO WITHIN 40 OR 80 MS OF THE EXACT C.G. LOCATION. WEIGHTS ARE ALSO UPDATED EVERY 10 SECONDS DURING A BURN, AND AT CUTOFF. CONSEQUENTLY, AS LONG AS THE CMC IS CONTROLLING BURNS, THE ONLY NEED TO UPDATE TRIMS SHOULD BE WHEN THE LM IS UNDOCKED. HOWEVER, SHOULD AN SCS BURN TAKE PLACE, THE DAP WILL HAVE NO KNOWLEDGE OF THE TRIM CHANGE, AND THE TRIMS SHOULD BE OBTAINED FROM TELEMETRY JUST PRIOR TO CUTOFF. THE DATA PRIORITY PANELS HAVE SPECIFIED THAT NO ADVERSE EFFECTS ON GUIDANCE, CONTROL OR MANEUVER ACCURACY WILL BE EXPERIENCED FOR TRIM ERRORS UP TO 0.5 DEG./AXIS AND WEIGHT ERRORS UP TO 10 PERCENT OF ACTUAL WEIGHT. WEIGHTS AND TRIMS WILL BE PROCEDURALLY PASSED TO THE CREW WITH EACH MANEUVER. SMALL DELTAS BETWEEN GROUND AND ONBOARD (CMC STORED) VALUES NEED NOT BE UPDATED-- ANY TRIM OR WEIGHT ERROR LARGER THAN 0.5 DEG. OR 10 PERCENT RESPECTIVELY MUST BE UPDATED IF THE G&N IS TO PERFORM THE MANEUVER.

R	ITEM	
	15-20	LOSS OF EITHER BMAG 1 OR 2 IN EITHER PITCH OR YAW CHANNEL BMAG 1 IS REQUIRED FOR SCS AUTO TVC AND SCS AUTO RCS CONTROL. BMAG 1 IS USED AS A BACKUP FOR ALL THE RATE FUNCTIONS PERFORMED BY BMAG 2. SINCE OTHER MODES OF TVC AND ATTITUDE CONTROL ARE AVAILABLE, THIS MALFUNCTION DOES NOT PRECLUDE CONTINUING THE MISSION. IF THE LOSS IS IN YAW BMAG 2, THE RSI IS USABLE IF RATE 1 IS SELECTED. IF THE FAILURE OCCURRED AFTER .05 G, THE RSI WOULD HAVE TO BE REALIGNED BECAUSE OF THE OFFSET THAT WOULD EXIST DUE TO AN IMPROPER RATE INPUT FOR THE PERIOD OF TIME IT TAKES TO RECOGNIZE THE FAILURE. IF THE YAW BMAG 1 IS LOST, THEN THE SCS FDAI ROLL ATTITUDE WILL BE ERRONEOUS AFTER .05 G SINCE BOTH ROLL AND YAW BMAG 1 OUTPUTS ARE CROSS-COUPLED TO DRIVE THE FDAI AFTER .05 G.
	15-21	LOSS OF BOTH BMAG 1 AND 2 IN EITHER PITCH OR YAW CHANNEL WITH THIS COMBINATION OF FAILURES, THE ENTIRE G&C CAPABILITY IS CONTINGENT UPON SINGLE FAILURES IN THE G&N SYSTEM. SCS ATTITUDE HOLD AND RATE DAMPING, SCS TVC, AND THE SCS AS AN ATTITUDE SOURCE FOR ENTRY ARE ALL LOST. ALL PHASES REQUIRING REDUNDANT SPS CONTROL ARE THEREFORE INHIBITED. MTVC-ACCEL CMD IS THE ONLY CONTROL MODE AVAILABLE FOR MODE III OR IV SPS CONTROL, BECAUSE THE G&N CAN NOT BE TARGETED FOR THE LAUNCH CONTINGENCY MANEUVERS. IT IS OBVIOUSLY SAFER TO CONTINUE INTO ORBIT AND DEORBIT USING THE G&N THAN IT WOULD BE TO ABORT THE LAUNCH PHASE FOR THESE FAILURES. (EVEN THOUGH ACCEL CMD IS CONSIDERED A POOR CAPABILITY.) IN LUNAR ORBIT, AND LUNAR STAY PHASES EARLY TEI IS ACCOMPLISHED TO PRECLUDE POSSIBLE G&N FAILURES FROM NEGATING THE ABILITY TO CONTROL AND MONITOR TEI. EVEN THOUGH REDUNDANT ATTITUDE REFERENCES FOR ENTRY ARE LOST, THE TRANSLUNAR COAST PHASE IS CONTINUED. THE ALTERNATIVE IS TO ABORT USING THE G&N WITH NO ACCEPTABLE BACKUP CONTROL MODES.
	15-22	LOSS OF ROLL BMAG LOSS OF ROLL BMAG 1 OR 2 WOULD REQUIRE MANUAL ROLL ATTITUDE CONTROL IN ALL SCS MODES SINCE ROLL AUTO CONTROL IS LOST. SCS TVC IS RETAINED WITH ROLL ATTITUDE HELD MANUALLY. THESE FAILURES HAVE NO EFFECT ON REDUNDANT SPS CONTROL. AFTER .05 G FOR A LOSS OF ROLL BMAG 1, THE SCS FDAI ROLL ATTITUDE WILL BE ERRONEOUS SINCE BOTH ROLL AND YAW BMAG 1 ARE REQUIRED. THE RSI WILL BE VALID SINCE IT IS DRIVEN BY BMAG 2. LOSS OF ROLL BMAG 2 MEANS LOSS OF REDUNDANT SCS ROLL RATE. IF THE FAILURES IS A ''HARDOVER'', THE USE OF ATT .//RATE 2 AND LIMIT CYCLE CONFIGURATION IS POSSIBLE IF BMAG 2 IS POWERED DOWN. THIS WOULD REQUIRE ALL THREE AXES TO BE IN A RATE DAMPED (LIMIT CYCLE) ATTITUDE HOLD. IF ANY RCS MANEUVERS ARE REQUIRED, THE LIMIT CYCLE MUST BE REMOVED. IF RATE 1 IS SELECTED FOR THE ROLL BMAG, BOTH RSI AND SCS FDAI ROLL ARE USABLE FOR ENTRY. IF THE FAILURE OCCURRED AFTER .05G, THE RSI WOULD HAVE TO BE REALIGNED BECAUSE OF THE OFFSET THAT WILL EXIST DUE TO AN IMPROPER RATE INPUT FOR THE PERIOD OF TIME IT TAKES TO RECOGNIZE THE FAILURE.
	15-23	LOSS OF BOTH ROLL BMAGS LOSS OF THE EMS FOR SCS THRUST VECTOR CONTROL DOES NOT PRECLUDE USE OF THE SCS TO CONTROL BURNS. THRUST DURATION CAN BE TIMED AND C/O EFFECTED BY MANUALLY PLACING THE DELTA V A AND B THRUST SWITCHES TO OFF. THE CMC IS PRIME FOR ALL TVC ANYWAY. FOR ENTRY CONSIDERATIONS, THERE IS NO WAY TO IMPROVE THE SITUATION. THE CMC IS PRIME FOR ENTRY, AND THERE ARE THIRD ORDER BACKUP TECHNIQUES (E.G. BANK REVERSE BANK, ZERO LIFT, CONSTANT G ETC.) NOT DEPENDENT ON EITHER THE CMC OR THE EMS. THE EMS IS NOT INSTRUMENTED VIA T/M BUT DELTA V TESTS ARE NORMALLY PERFORMED BEFORE TLI AND SPS MANEUVERS TO VERIFY ITS OPERATION. A COMPLETE SET OF EMS TESTS IS MADE PRE-ENTRY.

R	ITEM	
	15-24	LOSS OF EITHER SERVO LOOP IN PITCH OR YAW WITH LOSS OF A SERVO LOOP, TVC CAPABILITY IS AVAILABLE USING THE REMAINING SERVO LOOP IN THE FAILED AXIS-- HOWEVER, REDUNDANCY FOR THAT AXIS IS LOST. RCS PROPELLANTS MUST BE MAINTAINED FOR RECOVERY FROM A HARDOVER ENGINE SITUATION IN THE AXIS WITHOUT THE REDUNDANCY. THE PROPELLANT REQUIRED WILL VARY IN THE DOCKED AND UNDOCKED CASES. IF THE LM HAS BEEN CHECKED OUT AND DETERMINED CAPABLE OF SUPPORTING TEI, ONE SERVO LOOP FAILURE IN LUNAR ORBIT WOULD NOT REQUIRE TERMINATION OF THIS PHASE. THE LUNAR STAY PHASE MUST BE TERMINATED FOR LOSS OF REDUNDANT SPS CONTROL. DESCENT MUST BE INHIBITED FOR CONFIRMED LOSS OF REDUNDANT SPS CONTROL.
	15-25	LOSS OF BOTH TVC SERVO LOOPS FOR EARTH ORBIT, THE MISSION WOULD BE TERMINATED BECAUSE THE PRIME DEORBIT CAPABILITY IS LOST (SPS). IN THE LAUNCH PHASE, THERE IS NO MODE III OR IV CAPABILITY BECAUSE OF NO SPS CONTROL CAPABILITY. LIMITED LANDING POINT CONTROL IS AVAILABLE USING SM-RCS. ALL OTHER MISSION PHASES REQUIRE DEPENDENCY ON SM RCS OR LM SYSTEMS DUE TO LOSS OF ALL SPS CAPABILITY. THEREFORE ALL OTHER PHASES MUST BE TERMINATED OR INHIBITED FOR LOSS OF ALL SPS CAPABILITY.
	15-26	LOSS OF RHC'S WITH A LOSS OF EITHER RHC PROPORTIONAL CONTROL, THERE ARE NO MINIMUM REQUIREMENTS THAT HAVE BEEN VIOLATED, AND THE REMAINING RHC CAN BE USED WHEN PROPORTIONAL CONTROL IS REQUIRED FOR MTVC OR RCS CONTROL. WITH A LOSS OF PROPORTIONAL CONTROL FROM BOTH RHC'S, THE MINIMUM REQUIREMENTS FOR SPS ARE NOT VIOLATED. THERE IS NO MTVC RATE OR MTVC ACCEL CMD CAPABILITY, BUT SCS AUTO TVC IS AVAILABLE AND IS AN ACCEPTABLE BACKUP TO G&N TVC. RATE DAMPING IS A MINIMUM REQUIREMENT AND IS AVAILABLE. THERE WILL BE NO MTVC RATE OR MTVC ACCEL CMD CAPABILITY USING THE FAILED RHC BECAUSE THE PROPORTIONAL CONTROL TRANSDUCER IN THE RHC IS USED TO FURNISH THE NECESSARY COMMAND SIGNALS FOR BOTH RATE AND ACCEL CMD MODES OF MTVC. MANUAL MANEUVERS USING RCS WOULD HAVE TO BE MADE USING ACCEL CMD OR DIRECT SWITCHES IF ALL PROPORTIONAL CONTROL IS LOST. THIS CAPABILITY USES THE BREAKOUT SWITCHES AND THE DIRECT SWITCHES OF THE RHC AND IS COMPLETELY INDEPENDENT OF THE TRANSDUCER WHICH IS REQUIRED FOR PROPORTIONAL CONTROL.
	15-27	LOSS OF DIRECT RCS WITH A LOSS OF DIRECT RCS CONTROL FROM ONE RHC, THE REMAINING RHC CAN BE INTERCHANGED WITH THE LOST RHC IF DESIRED. THERE ARE TWO SETS OF DIRECT SWITCHES IN THE RHC. IF ONE SET SHOULD FAIL, THE REMAINING SET WILL PERMIT MANUAL DIRECT RCS CONTROL, BUT WITH HALF THE AUTHORITY, BECAUSE EACH SET OF SWITCHES DRIVES DIFFERENT JETS. WITH THE LOSS OF DIRECT RCS CONTROL FROM BOTH RHC'S THE MINIMUM REQUIREMENT FOR ATTITUDE CONTROL HAS BEEN VIOLATED EXCEPT FOR LUNAR STAY. THE DIRECT RCS CONTROL IS THE ONLY MEANS OF CONTROL OVER THE RCS COMPLETELY INDEPENDENT FROM THE AUTO RCS SYSTEM. ALL SCS LOGIC IS BYPASSED IN DIRECT, INCLUDING THE SOLENOID DRIVERS. THERE IS NO CORRECTIVE ACTION TO IMPROVE THE SITUATION. FURTHER DEGRADATION OF THE DIRECT RCS SYSTEM SHOULD NOT OCCUR, THUS THE STAY PHASE NEED NOT BE TERMINATED. STRICT ATTITUDE CONTROL VIA DIRECT RCS IS NOT REQUIRED FOR TEI SPS CONTROL AND IS NOT APPLICABLE TO THE LUNAR STAY PHASE. THIS FAILURE DOES NOT PRECLUDE THE USE OF AUTO ATTITUDE CONTROL VIA SCS AND G&N SYSTEMS.

R	ITEM

15-28 LOSS OF AUTO ATTITUDE IN PITCH OR YAW CHANNELS

THIS RULE IS WRITTEN TO COVER A SINGLE POINT FAILURE MODE IN THE RJEC WHEREBY PITCH AND YAW AUTO ATTITUDE HOLD IS LOST. PROCEDURALLY, FOR THESE FAILURES, CONTROL MIGHT BE REGAINED BY SWITCHING TO CMC CONTROL OR OPENING THE EMS CIRCUIT BREAKERS THUS REMOVING POWER FROM THE AUTO ATTITUDE CONTROL DISABLE CIRCUITRY. IF CONTROL IS NOT REGAINED BY OPENING THE EMC CB'S OR BY SWITCHING TO CMC, AN UNCORRECTABLE FAILURE(S) IN THE RJEC EXISTS.

IF CONTROL IS REGAINED BY SWITCHING TO CMC CONTROL, ALL G&N BURN CAPABILITY AND AUTO CONTROL IN PITCH AND YAW WILL BE AVAILABLE. IF CONTROL IS NOT REGAINED, AN UNCORRECTABLE FAILURE EXISTS IN BOTH CMC AND SCS AND WILL REQUIRE TERMINATION OF ALL MISSION PHASES EXCEPT LUNAR STAY. DIRECT RCS AND DIRECT ULLAGE WILL RE REQUIRED FOR PITCH AND YAW ATTITUDE CONTROL PRIOR TO SUBSEQUENT BURNS.

IF OPENING THE EMS CB'S REGAINS CONTROL, G&N BURNS WILL REQUIRE MANUAL BACKUP ENGINE OFF VICE EMS CUTOFF. SCS BURN CONTROL CAN ALSO BE ACCOMPLISHED FOR THIS FAILURE BY RESETTING THE EMS BREAKERS AT IGNITION AND OPENING THE BREAKERS AT ENGINE OFF.

15-29 LOSS OF FDAI

WITH LOSS OF ONE FDAI, THE REMAINING FDAI CAN BE USED AND RECONFIGURED FOR DISPLAY AS NECESSARY AND THE MISSION CAN BE CONTINUED. WITH THE LOSS OF BOTH FDAI'S, AN ONBOARD ATTITUDE REFERENCE SYSTEM IS NOT AVAILABLE TO MONITOR BURNS. THE REMAINING ATTITUDE REFERENCE SOURCE (DSKY) IS SUBJECT TO SINGLE FAILURES IN THE G&N AND IS NOT CONSIDERED ADEQUATE AS AN ATTITUDE REFERENCE FOR MONITORING MANEUVERS BECAUSE IT IS USED TO DISPLAY OTHER PARAMETERS CRITICAL TO MANEUVERS (VM,TGO ETC.).

AT LEAST ONE FDAI IS REQUIRED TO MONITOR LOI BECAUSE LOI IS ESPECIALLY CRITICAL IN TERMS OF PITCH ATTITUDE AND OUT-THE-WINDOW REFERENCE IS NOT ACCEPTABLE AS A PRIME ATTITUDE SOURCE. THE LUNAR HORIZON IS NOT AVAILABLE UNTIL LATE IN THE MANEUVER AND BORESIGHT STAR AVAILABILITY IS A FUNCTION OF LIGHTING AND LAUNCH WINDOW. THE SAME CONSIDERATIONS APPLY TO THE TEI MANEUVER.

FOR LOSS OF BOTH FDAI'S, THE LM DPS SHOULD BE USED FOR TEI, IF POSSIBLE, AND TEI SHOULD BE ACCOMPLISHED AS SOON AS POSSIBLE TO PRECLUDE G&N FAILURES FROM DESTROYING THE ONLY REMAINING CAPABILITY TO MONITOR TEI AND ENTRY ATTITUDES.

FAILURE OF BOTH FDAI'S DURING THE LUNAR STAY PHASE WILL REQUIRE USE OF THE DSKY FOR ATTITUDE READOUT. IN ANY EVENT, TERMINATION OF THE LUNAR STAY WOULD NOT IMPROVE THE ONBOARD READOUT CAPABILITY. THESE FAILURES WOULD REQUIRE RETENTION OF THE LM ASCENT STAGE TO PROVIDE AN ONBOARD ATTITUDE REFERENCE TO INSURE AN ATTITUDE REFERENCE FOR TEI (REQUIRES A SINGLE G&N FAIL OR TWO DSKY FAILS).

15-30 LOSS OF AC1 PHASE A

LOSS OF AC1 PHI A CONSTITUTES A LOSS OF SCS RATE DAMPING, AND, THEREFORE, ELIMINATES THE HYBRID DEORBIT CAPABILITY. SPS CONTROL WOULD BE LOST BY A FURTHER SINGLE POINT FAILURE OF AC2 PHI A.

THE FOLLOWING SUMMARIZES AVAILABLE CAPABILITY---

A. AUTO ATTITUDE CONTROL USING DAP

B. RATE DAMPING USING DAP

C. TVC USING DAP

D. ATTITUDE REFERENCE WITH FDAI NO. 2 AND CMC SOURCE

E. ONLY ONE TVC SERVO LOOP POWER SOURCE

F. MTVC FROM RHC NO. 2 IN RATE AND ACCEL COMMAND

G. MANUAL CONTROL OF RCS USING DAP, OR DIRECT RCS FROM BOTH RHC'S.

H. GPI PITCH-YAW DRIVE NO. 2

I. RSI

R	ITEM	
	15-30 CONT	THE EARTH ORBIT PHASE IS TERMINATED BECAUSE BOTH REMAINING DEORBIT METHODS ARE SUBJECT TO THE AC2 PHI A FAILURE. ALL OTHER PHASES ARE TERMINATED FOR LACK OF SPS CONTROL REDUNDANCY AS THEY ARE ALSO, OF COURSE, SUBJECT TO THE AC2 PHI A FAILURE. TRANSLUNAR COAST IS CONTINUED EVEN THOUGH REDUNDANCY REQUIREMENTS FOR AN ENTRY ATTITUDE REFERENCE ARE VIOLATED BECAUSE IT IS CONSIDERED MORE CONSERVATIVE TO ACHIEVE/MAINTAIN FREE RETURN THAN TO ABORT WITHOUT REDUNDANT SPS CONTROL. LOSS OF ENTRY ATTITUDE REFERENCE REDUNDANCY IS A FURTHER REASON TO NO GO TLI.
	15-31	LOSS OF AC2 PHASE A LOSS OF AC2 PHI A CONSTITUTES A LOSS OF ALL SCS TVC AND SUBJECTS CONTROL OF THE SPS AND RCS TO A SINGLE-POINT CMC FAILURES OR AC 1 PHI A FAILURE. REF. MR RATIONALE 15-30. COMMENTS THE FOLLOWING SUMMARIZES THE AVAILABLE CAPABILITY--- A. AUTO ATTITUDE CONTROL USING DAP B. RATE DAMPING USING DAP C. TVC USING DAP D. ATTITUDE REFERENCE WITH FDAI NO. 1 AND CMC SOURCE E. ONLY ONE TVC SERVO LOOP POWER SOURCE F. MANUAL CONTROL OF RCS USING DAP OR DIRECT RCS FROM BOTH RHC'S G. GPI PITCH-YAW DRIVE NO. 1 H. TVC USING GPI THUMBWHEELS (NOT CONSIDERED AN ACCEPTABLE MODE BECAUSE OF THE LACK OF AN AUTOMATIC ATTITUDE ERROR INPUT AND THE CONSTRAINT THAT THE ENGINE MUST BE ALTERNATELY STOPPED AND RELIT TO REINITIALIZE THE SCS INTEGRATOR FOR BURNS OVER APPROX. 3 MINUTES).
	15-32	LOSS OF ORDEAL THE ORDEAL IS A CONVENIENCE TOOL NOT MANDATORY TO THE ACCOMPLISHMENT OF ANY MISSION ACTIVITY. THEREFORE, ITS LOSS WARRANTS NO SIGNIFICANT MISSION ALTERATIONS.
	15-33	LOSS OF ENTRY MONITOR SYSTEM LOSS OF THE EMS FOR SCS THRUST VECTOR CONTROL DOES NOT PRECLUDE USE OF THE SCS TO CONTROL BURNS. THRUST DURATION CAN BE TIMED AND C/O EFFECTED BY MANUALLY PLACING THE DELTA V A AND B THRUST SWITCHES TO OFF. THE CMC IS PRIME FOR ALL TVC ANYWAY. FOR ENTRY CONSIDERATIONS, THERE IS NO WAY TO IMPROVE THE SITUATION. THE CMC IS PRIME FOR ENTRY, AND THERE ARE THIRD ORDER BACKUP TECHNIQUES(E.G. BANK REVERSE BANK, ZERO LIFT, CONSTANT G ETC.) NOT DEPENDENT ON EITHER THE CMC OR THE EMS. ELIMINATING THE 24-HOUR LUNAR ORBIT ACTIVITIES POST RENDEZVOUS PROVIDES THE POSSIBILITY OF REACHING E.I. 24 TO 48 HOURS EARLIER IN THE TIME LINE, THUS DECREASING THE TIME IN WHICH THE MISSION IS EXPOSED TO AN ENTRY ENTIRELY WITHOUT GUIDANCE (SHOULD THE CMC FAIL). THE EMS IS NOT INSTRUMENTED VIA T/M BUT DELTA V TESTS ARE NORMALLY PERFORMED BEFORE TLI AND SPS MANEUVERS TO VERIFY ITS OPERATION. A COMPLETE SET OF EMS TESTS IS MADE PRE-ENTRY.

R	ITEM	
	15-34	GROUND AT EITHER SPS SOLENOID DRIVER THE MAJOR CONCERN IS TO PROTECT AGAINST INADVERTENT FIRING OF THE SPS. THERE ARE THREE FAILURE MODES WHICH COULD CAUSE INDICATION OF A GROUNDED SOLENOID DRIVER. THESE ARE--- AN ACTUAL SHORT OR ON COMMAND AT THE SOLENOID DRIVER, A GROUND OR SHORT UPSTREAM OF THE PROPELLANT CONTROL PILOT VALVE SOLENOIDS, AND SHORTS IN THE EMS OR G&N LOGIC. GROUNDED SOLENOID DRIVERS CAN BE IDENTIFIED BY MALFUNCTION PROCEDURES AND CAN BE HANDLED BY MANUALLY OPERATING THE DELTA V THRUST SWITCHES PRECISELY AT IGNITION TIME. FOR THIS CASE, INADVERTANT OPERATION OF THE SPS IS GUARDED AGAINST BY OPENING THE SPS PILOT VALVE CIRCUIT BREAKERS. A GROUND UPSTREAM OF THE PROPELLANT CONTROL PILOT VALVES WOULD ISOLATE ONE SET OF BALL VALVES AND COULD ONLY BE CONFIRMED BY ENGINE OPERATION AND WOULD RESULT IN A SINGLE BANK BURN CAPABILITY. MISSION RULE 16-22 WOULD BE APPLICABLE ONCE SINGLE BANK OPERATION IS CONFIRMED. SHORTS TO GROUND IN THE EMS OR G&N LOGIC ONCE CONFIRMED BY PROPER ENGINE OPERATION AND NOT AFFECTING REDUNDANT SPS CAPABILITY ARE NOT SUFFICIENT REASON TO CURTAIL OTHER MISSION PHASES. FOR THESE CONDITIONS MANUAL ENGINE CUTOFF IS ACCEPTABLE. SINCE PROPER ANALYSIS OF THIS MALFUNCTION REQUIRES ENGINE OPERATION, THE FAILURE MODE MAY NOT BE DETERMINED PRE TLI OR PRE LOI. SINCE THE PRIME CONCERN IS TO PREVENT PREMATURE IGNITION, BOTH TLI AND LOI ARE NOT INHIBITED. THE WORST CASE SINGLE FAILURE WOULD INHIBIT ONE SET OF BALL VALVES AND SUBJECT CONFIRMATION OF THE FAILURE TO LOI-1 IN WHICH CASE MISSION RULE 16-22 WOULD APPLY.
	15-35	LOSS OF TRANSLATION HAND CONTROLLER THE ONLY WAY TO CONTROL THE +X (OR -X) TRANSLATION MANEUVERS USING AUTO COILS (I.E. WITH RATE DAMPED ATTITUDE HOLD) IS WITH THE THC. THE CAPABILITY TO PERFORM A TRANSLATION MANEUVER IS REQUIRED FOR BOTH BACKUP DEORBIT TECHNIQUES, TD&E, LM RESCUE TERMINAL PHASE, UNDOCKING AND DOCKING. COMMENTS THE THC CONTAINS COMPLETELY REDUNDANT RELAYS (INCLUDING SEPARATE POWER SUPPLIES) FOR EACH TRANSLATION DIRECTION IN ALL THREE AXES.

R	ITEM

15-50 LOSS OF COMMAND MODULE COMPUTER

THERE ARE NUMEROUS SPECIFIC FAILURES THAT CONSTITUTE LOSS OF THE CMC. SOME OF THEM (E.G. POWER LOSS) WILL COMPROMISE THE CMC FOR ALL FUNCTIONS-- OTHERS (E.G. LOSS OF CHANNEL 5) WILL RESULT IN LOSS OF A SINGLE FUNCTION. IN EACH CASE, THE PARTICULAR FAILURE MUST BE EVALUATED IN LIGHT OF MISSION DEMANDS AND REMAINING CAPABILITY TO MEET THOSE DEMANDS. RATHER THAN WRITE NUMEROUS MISSION RULES COVERING A MULTITUDE OF DEGRADED AND FAILED CMC SITUATIONS, ONE RULE WAS WRITTEN TO COVER THE PRIMARY CMC FUNCTION--- PROVIDE GUIDANCE AND CONTROL.

THE CMC IS REQUIRED TO MONITOR PERIGEE ALTITUDE FOR THE CM PORTION OF THE HYBRID DEORBIT-- CONSEQUENTLY, ITS LOSS EQUALS LOSS OF HYBRID. THE TWO REMAINING DEORBIT METHODS CAN BOTH BE ADEQUATELY HANDLED BY THE SCS, AND NO SINGLE SCS FAILURE WILL PRECLUDE BOTH OF THEM.

THE CMC IS USED TO PERFORM RETURN-TO-EARTH NAVIGATION FOR THE COASTING PHASES. A COMMUNICATIONS LOSS WOULD SEVERLY DEGRADE RETURN-TO-EARTH CAPABILITY WITHOUT THE CMC. THE CMC IS ALSO REQUIRED TO EFFECT THE LM RESCUE. ITS LOSS PRECLUDES CSM ACTIVE RENDEZVOUS.

THE EMS PROVIDES A BACKUP TO THE CMC FOR ENTRY. THE EMS IS FURTHER BACKED UP BY MANUAL REENTRY TECHNIQUES.

LOSS OF THE CMC IS ALSO CONSIDERED LOSS OF REDUNDANT SPS CONTROL, BECAUSE ALL REMAINING ACCEPTABLE SCS TVC MODES ARE SUBJECT TO A SINGLE POINT FAILURE (AC 2 PHI A). LOSS OF THE CMC AFFECTS REDUNDANT SPS CONTROL AND AS SUCH WOULD REQUIRE TERMINATION OF LUNAR STAY PHASES. IF FAILURE OCCURRED PRIOR TO DESCENT IN LUNAR ORBIT, AN EARLY TEI USING THE DPS WOULD BE PLANNED. IF NO DPS AVAILABLE, EARLY TEI WOULD BE ACCOMPLISHED USING THE SCS TO CONTROL THE SPS. CMC LOSS PRIOR TO LM JETTISON NECESSITATES RETAINING THE ASCENT STAGE FOR COMMUNICATIONS BACKUP SINCE GUIDANCE, NAVIGATION, AND CONTROL DATA MUST BE VOICED UP FROM MCC-H.

COMMENTS

THE FOLLOWING FAILURES WILL CONSTITUTE LOSS OF THE CMC TO PROVIDE ITS PRIMARY FUNCTION OF GUIDANCE AND CONTROL FOR MANEUVERS---

(1) CMC WARNING FOR---

(A) SCALAR FAIL

(B) COUNTER FAIL

(C) SCALAR FREQUENCY

(D) PARITY FAIL

(E) RUPT LOCK

(F) TC TRAP

(G) NIGHT WATCHMAN ALARM I

(H) VOLTAGE FAIL

(I) OSCILLATOR FAIL

(2) FAILURE TO CONTROL TVC ENABLE SIGNAL

(3) FAILURE TO CONTROL OPTICS ERROR COUNTER ENABLE SIGNAL

(4) FAILURE TO RESPOND TO S/C CONTROL SWITCH

(5) FAILURE TO CONTROL SPC GIMBAL VIA OCDU DACS IN EITHER AXIS.

*COULD REPRESENT A FAILURE OUTSIDE OF THE CMC (E.G. PIPA FAIL) BUT NONETHELESS, STILL REPRESENTS A NO/GO FOR THE CMC.

15-51 LOSS OF DSKY

LOSS OF A SINGLE DSKY IS NOT CAUSE FOR ANY SIGNIFICANT MISSION ALTERATION. TO COMMUNICATE WITH THE CMC, THERE MUST BE 1 ENCODER AND 1 DECODER. EITHER DSKY CAN FURNISH EITHER OR BOTH FUNCTIONS. THE CREWS FEEL THEY CAN OPERATE THE CMC SATISFACTORILY UNDER ANY COMBINATION OF ENCODER/DECODER FAILURES AS LONG AS ONE OF EACH REMAINS OPERABLE. IT IS OBVIOUSLY INCONVENIENT TO PERFORM LM RESCUE WITHOUT THE NAV DSKY, OR SPS MANEUVERS WITHOUT THE MDC DSKY.

LOSS OF BOTH DSKY'S (ENCODER AND DECODER FUNCTIONS) IS EQUIVALENT TO LOSS OF THE CMC SINCE THE COMPUTER IS ESSENTIALLY USELESS IF THE CREW CANNOT CONTROL IT. THE RATIONALE FOR LOSS OF CMC (15-50) APPLIES IN TOTAL HERE.

R	ITEM	
	15-52	LOSS OF INERTIAL SUBSYSTEM THERE ARE NUMEROUS SPECIFIC FAILURES THAT CONSTITUTE LOSS OF THE PLATFORM. IN EACH CASE, THE PARTICULAR FAILURE MUST BE EVALUATED IN LIGHT OF MISSION DEMANDS AND REMAINING CAPABILITY TO MEET THOSE DEMANDS. AS WAS THE CASE WITH THE CMC, RATHER THAN WRITE NUMEROUS MISSION RULES COVERING A MULTITUDE OF DEGRADED AND FAILED ISS SITUATIONS, ONE RULE WAS WRITTEN TO COVER THE PRIMARY ISS FUNCTION--- PROVIDE THE CMC WITH VELOCITY MAGNITUDE AND DIRECTION IN ORDER THAT IT (THE CMC) CAN PROVIDE GUIDANCE AND CONTROL. FOR MISSION RULE PURPOSES, LOSS OF THE PLATFORM'S ABILITY TO PROVIDE THE CMC WITH THE NEEDED DATA IS EQUIVALENT TO LOSS OF THE CMC. THE RATIONALE FOR LOSS OF CMC (15-50) APPLIES.
	15-53	LOSS OF OPTIC SUBSYSTEM THE BASIC CAPABILITY REQUIRED TO USE THE OPTICS FOR NAVIGATION AND RENDEZVOUS IS DESCRIBED IN THE RATIONALE FOR RULE 15-5. THE OTHER PRIMARY FUNCTION OF THE OPTICS IS PLATFORM ALIGNMENT. THE SAME RATIONALE APPLIES FOR ALIGNMENT, BUT A BACKUP IS AVAILABLE. THE COAS PROVIDES AN ADEQUATE MEANS FOR OBTAINING INERTIAL REFERENCES TO ALIGN THE IMU AND IS COMPLETELY INDEPENDENT OF THE OPTICS. LOSS OF OPTICS IS DEFINED AS THE INABILITY TO SEE A STAR THROUGH THE OPTICS. ALTHOUGH AUTO DRIVE CAPABILITY IS ADMITTEDLY CONVENIENT, OPTICS POSITIONING CAN BE DONE MANUALLY VIA THE DRIVE ASSEMBLY, THE UNIVERSAL TOOL OF OR SPACECRAFT ATTITUDE CONTROL.
	15-54	LOSS OF OPTICS COUPLING DATA UNITS THE OPTICS CDU'S (SPECIFICALLY, THE DIGITAL TO ANALOG CONVERTER PORTION) LINK THE CMC TO THE SERVO LOOPS FOR DAP TVC PURPOSES. LOSS OF THIS CAPABILITY IN THE OCDU PRECLUDES ALL CMC CONTROL OF THE SPS. THIS FAILURE VIOLATES THE TVC REDUNDANCY REQUIREMENTS FOR LOI AND TEI, BECAUSE SCS TVC MODES ARE NOT INDEPENDENT OF SINGLE FAILURES. (REF MR 15-31). COMMENTS THE CMC MAY STILL BE USED TO MONITOR BURNS EITHER IN P40 OR P47.

R	ITEM

16-1

A. SPS PROBLEMS HAVE BEEN DIVIDED INTO THREE CATEGORIES--- THOSE WHICH CAUSE THE SPS TO BE UNSAFE, THOSE WHICH PROHIBIT THE USE OF THE SPS, AND THOSE WHICH DEGRADE THE CAPABILITY OF THE SPS.

(1) THERE ARE ONLY TWO PROBLEMS IN THE FIRST CATEGORY--- PROPELLANT LEAKS AND OVER-PRESSURE PROBLEMS. A PROPELLANT LEAK INSIDE THE SM (LIQUID OR VAPOR, OX OR FUEL) SETS UP A HAZARDOUS SITUATION DUE TO THE OBVIOUS EXPLOSIVE POTENTIAL PLUS THE CORROSIVE EFFECTS OF THE PROPELLANTS ON OTHER SM COMPONENTS. AN OVERPRESSURIZATION SITUATION IS EXTREMELY REMOTE SINCE IT INVOLVES MULTIPLE FAILURES INCLUDING TWO REGS IN SERIES, A RELIEF VALVE, AND PROBABLY THE HE VALVE IN SERIES WITH THE REGULATORS. WITH THE EXCEPTION OF TRANSLUNAR COAST, THE ACTION FOR EITHER CASE IS TO TERMINATE THE PHASE ASAP AND ENTER NEXT BEST PTP. A LUNAR FLY-BY IS CONSIDERED SAFER THAN ABORTING THE TRANSLUNAR COAST PHASE.

(2) THE MAJORITY OF SPS PROBLEMS FALL INTO THE SECOND CATEGORY. THESE INCLUDE SUCH CONDITIONS AS FLANGE TEMPERATURE GREATER THAN 480 DEG F DURING THE PREVIOUS BURN, A FUEL/OX DELTA P GREATER THAN 20 PSID, ET CETERA, AND ALL RESULT IN THE SPS BEING INOPERABLE, OR AT BEST, UNSAFE TO OPERATE. FOR THESE FAILURES, ALL PHASES EXCEPT TRANSLUNAR COAST AND LM DESCENT PHASES WILL BE TERMINATED. THIS WILL BE FOLLOWED BY ENTRY INTO THE NEXT BEST PTP. OBVIOUSLY, TLC WILL NOT BE ABORTED USING AN INOPERABLE SPS. SINCE THE PROPELLANT TANK LEAK IS THE ONLY CASE WHERE SPS CAPABILITY IS DECREASING WITH TIME, THE DESCENT PHASE WILL NOT BE ABORTED FOR THE SECOND CLASS OF FAILURES. A NORMAL LIFTOFF FROM THE LUNAR SURFACE IS PREFERABLE TO ABORTING POWERED DESCENT.

(3) IN THE THIRD CATEGORY ARE THOSE SPS PROBLEMS WHICH CAUSE THE SPS TO BE CAPABLE OF ONLY ONE MORE START (E.G., NO ULLAGE AFTER THE STORAGE TANKS ARE EMPTY) OR CAPABLE OF DEGRADED PERFORMANCE (E.G., LOW GN2 PRESSURE, IN A BLOW-DOWN MODE, ET CETERA). IN THIS SITUATION, THE ENGINE WILL BE USED FOR CRITICAL BURNS ONLY. NO COMMITMENT WILL BE MADE TO A PHASE REQUIRING SPS BURNS. FOR THE SPS HELIUM SOURCE LOSS CASE, THE LUNAR STAY PHASE WILL NOT BE TERMINATED SINCE THE SPS HAS SUFFICIENT BLOWDOWN CAPABILITY FOR TEI AND TEC MIDCOURSE CORRECTIONS. FOR ALL OTHER FAILURES IN THIS CATEGORY, ALL PHASES EXCEPT TLC AND LM DESCENT WILL BE TERMINATED. THIS WILL BE FOLLOWED BY ENTRY INTO NEXT BEST PTP. THE RATIONALE FOR CONTINUING TLC AND DESCENT PHASE HAS BEEN STATED ABOVE.

B. ULLAGE MANEUVERS ARE REQUIRED PRIOR TO SPS BURNS WHEN THE STORAGE TANKS ARE EMPTY. THE ULLAGE SETTLES THE SPS PROPELLANTS AND REDUCES HELIUM INGESTION INTO THE ENGINE WHICH CAN RESULT IN ROUGH COMBUSTION AND/OR LOW THRUST. LACK OF ULLAGE CAPABILITY IS NOT CAUSE FOR INHIBITING CRITICAL BURNS, BUT NO COMMITMENT WILL BE MADE TO A PHASE REQUIRING SPS BURNS IF ULLAGE CAPABILITY DOES NOT EXIST. AS SHOWN ON APOLLO 7-13, TWO-JET OR FOUR-JET ULLAGE IS ADEQUATE-- TWO-JET IS PREFERRED FOR PURPOSES OF RCS MANAGEMENT.

C. THERE ARE NO SPS ANOMALIES, CONDITIONS, OR MALFUNCTIONS THAT ARE CAUSE FOR SHUTTING DOWN A CRITICAL BURN.

16-2 LAUNCH PHASE

THE REQUIREMENT FOR AN SPS BURN DURING LAUNCH IS PREDICTED ON A FAILURE OF THE LAUNCH VEHICLE. IF AN SPS FAILURE OCCURS RESULTING IN THE SYSTEM BEING NO-GO FOR A BURN, THE SM RCS WILL BE USED FOR DECORBIT-- THIS IS CONSIDERED LESS HAZARDOUS THAN A LAUNCH ABORT.

COMMENTS

THE ONLY SPS FAILURE WHICH COULD BE CONSIDERED A LAUNCH ABORT SITUATION IS A SIMULTANEOUS LEAK OF FUEL AND OXIDIZER IN AN AREA WHERE MIXING OF PROPELLANT COULD OCCUR. IF PROPELLANT IGNITION DOES NOT OCCUR BY THE TIME A LEAK IS VERIFIED, IGNITION IS IMPROBABLE.

R	ITEM	
	16-4	NO RATIONALE REQUIRED
	16-5	NO RATIONALE REQUIRED
	16-6	NO RATIONALE REQUIRED
	16-7	DESCENT PHASE FOR THE CASE OF CONFIRMED SPS FAILURES, IT IS DESIREABLE TO RENDEZVOUS WITH AS MUCH LM PROPELLANT AS POSSIBLE. THUS, PDI SHOULD BE ABORTED ANYTIME FOR SPS LEAKS. COMMENTS ASSUMING A NOMINAL MISSION TO THIS POINT, THE SPS HAS BLOWDOWN CAPABILITY TO COMPLETE THE ENTIRE MISSION.
	16-8	NO RATIONALE REQUIRED
	16-9	NO RATIONALE REQUIRED
	16-10	NO RATIONALE REQUIRED
	16-11	NO RATIONALE REQUIRED

R	ITEM	
	16-12	PROPELLANT GAGING

FOR ALL SPS BURNS, THE 'IMU DELTA V OBTAINED' METHOD WILL BE THE PRIME METHOD OF DETERMINING SPS PROPELLANT QUANTITIES. THIS METHOD USES THE INITIAL WEIGHT OF THE SPACECRAFT PRIOR TO A BURN, THE DELTA V OBTAINED FROM THE IMU, AND THE NOMINAL ISP. THE VALUE OF THE DELTA V OBTAINED IS ACCURATE TO +/- 0.2 FPS WHICH CONVERTS TO 2 LBS OF PROPELLANT IN THE WORST CASE. BY VARYING THE ISP BY ITS 3-SIGMA DISPERSION, THE VALUE OF THE PROPELLANT USED VARIES BY 150 LBS IN THE WORST CASE. THE TOTAL INACCURACY IS +/- 152 LBS OR 0.4 PERCENT.

FOR SPS BURNS LESS THAN 25 SECONDS, THE 'FLOW RATE TIMES BURN TIME' METHOD (ACCURACY +/- 3 PERCENT) IS SECONDARY. ON BURNS LESS THAN 5 SECONDS, THE PUGS IS NOT POWERED--- PROPELLANT SLOSH PRECLUDES THE USE OF THE PUGS UP TO 25 SECONDS AFTER IGNITION. ACTUATION OF THE PU VALVE AND OFF-NOMINAL INLET PRESSURES INTRODUCE ERROR INTO THE CALCULATION OF FLOW RATE TIMES BURN TIME. THE 3 PERCENT ACCURACY FIGURE WAS DERIVED USING 3-SIGMA DISPERSION FIGURES FOR FLOW RATE, AND ASSUMING BURN TIME CAN BE DETERMINED WITHIN 0.5 SECONDS. THE ACCURACY INCREASES AS THE BURN TIME DECREASES.

FOR BURNS OVER 25 SECONDS IN DURATION, THE ONBOARD GAGING SYSTEM WILL BE CONSIDERED THE SECONDARY METHOD OF DETERMINING SPS PROPELLANT QUANTITIES. THE 25 SECOND PERIOD IS TIME REQUIRED FOR THE PROPELLANTS TO SETTLE AFTER IGNITION. THE ACCURACY OF THE TOTAL SYSTEM INCLUDING SENSOR, PCM CONVERSION, AND TRANSMISSION IS 1 PERCENT (REF. NR TDR G8-003 REV A, DATED 6-15-68).

R	ITEM

16-13 PU VALVE UTILIZATION

TWO CONTRIBUTING FACTORS RESULT IN AN OXIDIZER UNBALANCE BEFORE SPS CROSSOVER-- THESE ARE HELIUM ABSORPTION IN THE OXIDIZER TANK AND A BIAS IN THE OXIDIZER GAUGING PROBE.

THE PHENOMENON OF HELIUM ABSORPTION OCCURS IN THE OXIDIZER TANKS DUE TO THE CHEMICAL STRUCTURE OF THE OXIDIZER. THE INTERSTICES (SPACE BETWEEN MOLECULES) OF NITROGEN TETROXIDE ARE SUCH THAT HELIUM MOLECULES CAN, IN EFFECT, GO INTO SOLUTION. THIS IS NOT A CHEMICAL REACTION, BUT INVOLVES HELIUM MOLECULES MOVING INTO THE SPACES BETWEEN OXIDIZER MOLECULES. UDMH (FUEL) HAS A STRUCTURE SUCH THAT HELIUM ABSORPTION IS PRACTICALLY NIL. SINCE THE SUMP TANK CONTAINS MORE OXIDIZER THAN THE STORAGE TANK, MORE HELIUM CAN BE ABSORBED IN THE SUMP TANK. THE NET EFFECT IS A GREATER DECREASE IN PRESSURE IN THE SUMP TANK-- ABOUT 150 POUNDS OF OXIDIZER TRANSFERS FROM THE STORAGE TANK TO THE SUMP TANK DUE TO A DELTA PRESSURE BETWEEN THE SUMP AND STORAGE TANKS. THIS QUANTITY OF OXIDIZER IS ABOVE THE GAUGING STILLWELL AND IS NOT GAUGED BY THE SYSTEM.

AFTER CROSSOVER, THE CAPACITANCE PROBE IN THE OXIDIZER STORAGE TANK INDICATES A QUANTITY OF OXIDIZER REMAINING (APPROX 0.3 PERCENT). AFTER PAD LOADING, A DIELECTRIC COMPENSATOR IS SET TO BIAS OUT THE ERRONEOUS READING. THE NET EFFECT OF THIS PROCEDURE IS A SMALL NEGATIVE PERCENT (-0.1 PERCENT) SUMMED INTO THE STORAGE PROBE OUTPUT.

SUMMATION OF THE TRANSFERRED OXIDIZER AND THE GUAGING COMPENSATION RESULTS IN A NET BIAS PRIOR TO CROSSOVER (APPROX 200 LBS DECREASE). THE PU VALVE SHOULD BE OPERATED TO MAINTAIN THE UNBALANCE THAT IS INDICATED AFTER THE SYSTEM SETTLES OUT. AT CROSSOVER, THE BIAS COMPENSATION GOES TO ZERO (NO NEGATIVE OUTPUT)-- AFTER THE OXIDIZER LEVEL REACHES THE TOP OF THE GAUGING PROBE, THE UNBLANCE METER WILL HAVE MOVED IN A CLOCKWISE DIRECTION (ENGINE PERFORMANCE WILL DETERMINE WHETHER THE NEEDLE MOVES TO ZERO-- IF THE FUEL FLOW RATE IS HIGH, THE UNBALANCE MAY BE SUCH THAT AN INCREASE IN PU VALVE POSITION IS ALWAYS REQUIRED). SINCE THE BIASES WILL BE REMOVED AFTER CROSSOVER, THE PU VALVE SHOULD BE OPERATED TO DRIVE THE UNBALANCE TO ZERO.

COMMENTS

THE 25 SECOND PERIOD IS A FUNCTION OF PROPELLANT SETTLING-- AFTER THIS PERIOD, THE SLOSH SHOULD BE SETTLED OUT AND THE PUGS READINGS CAN BE USED.

16-14 DUAL BANK VS SINGLE BANK OPERATION

PRIOR TO THE FIRST SPS IGNITION, THE FEEDLINES DOWNSTREAM OF THE BALL VALVES ARE UNWETTED. THE ARRANGEMENT OF INJECTOR FEEDLINES IS SUCH THAT A DUAL BANK IGNITION CAN RESULT IN A FUEL LEAD IN THE INJECTOR HUB. FUEL VAPOR ENTERS THE OXIDIZER ORIFICES AND CAUSES AN EXPLOSION WITHIN THE INJECTOR. THE OXIDIZER PORTS MAY BE DEFORMED AS A RESULT.

COMMENTS

THE FUEL LEAD PHENOMENON SHOULD NOT OCCUR WHEN THE LINES HAVE BEEN WETTED, BUT TO PRECLUDE THE POSSIBILITY AND TO STANDARDIZE IGNITION PROCEDURES, ALL IGNITIONS WILL BE SINGLE BANK. BANK A IS USED FOR THE FIRST START-- THAT BANK IS CLOSER TO THE INJECTOR, RESULTING IN A SMOOTHER START.

R	ITEM	
	16-15	PROPELLANT MANAGEMENT A. THE PROPELLANT REDLINE TO COMMIT TO LUNAR ORBIT IS BASED ON A NOMINAL MISSION PROFILE FOR LOI, DOI, TEI (NORMAL RETURN) AND AN ALLOWANCE FOR TEC MIDCOURSE CORRECTIONS (160 FPS, 3-SIGMA SCS CUTOFF ON TEI). LM RESCUE IS NOT INCLUDED IN THE GO/NO-GO FOR LUNAR ORBIT SINCE AN ALTERNATE LUNAR MISSION MAY BE SUBSTITUTED. B. THE PROPELLANT REDLINE TO COMMIT TO UNDOCKING IS BASED ON NOMINAL CIRC, LOPC LM RESCUE, TEI (SLOW RETURN) AND TEC MCC'S. COMMENTS NOMINAL DELTA VELOCITY VALUES WERE USED FOR THE SPS MANEUVERS. ALTERATIONS MAY BE MADE TO THE FLIGHT PLAN BASED ON SPS DELTA VELOCITY CAPABILITY PRIOR TO A GIVEN MANEUVER.
	16-16	PROPELLANT FEEDLINE TEMPERATURE MANAGEMENT FEEDLINE AND ENGINE VALVE TEMPERATURE MANAGEMENT IS NECESSARY TO PRECLUDE POSSIBLE FREEZING OR VAPORIZING OF PROPELLANTS. THE ENGINE WILL NOT BE OPERATED IF THE TEMPERATURE EXCEEDS THE LIMITS OF 25 DEG F OR 100 DEG F. EXCEEDING THE LOWER LIMIT COULD RESULT IN FUEL FREEZING WHICH WOULD CAUSE LINE BLOCKAGE OR EXPLOSION DUE TO AN IMPROPER MIXTURE RATIO. EXCEEDING THE UPPER LIMIT COULD RESULT IN OXIDIZER VAPORIZING WHICH IN TURN WOULD RESULT IN AN IMPROPER MIXTURE RATIO. COMMENTS FUEL FREEZES AT 19 DEG F, OXIDIZER AT 12 DEG F. OXIDIZER VAPORIZES AT 150 DEG F. THE LIMITS FOR CYCLING THE LINE HEATERS ARE OBVIOUSLY WELL PADDED WITH RESPECT TO CRITICAL LIMITS ON PROPELLANT TEMPERATURE.
	16-17	ULLAGE MANAGEMENT TWO-JET ULLAGES HAVE BEEN PROVEN SATISFACTORY ON APOLLO 7 THRU 13 FOR PURPOSES OF PROPELLANT SETTLING. THE TWO-JET MANEUVER PROVIDES MORE LATITUDE FOR RCS MANAGEMENT. COMMENTS SODB CURVES ARE AVAILABLE SHOWING ULLAGE TIME REQUIRED AS A FUNCTION OF SPS PROPELLANT REMAINING AND SPACECRAFT WEIGHT.

R	ITEM	
	16-20	PRESSURE DECAY IN FUEL OR OXIDIZER TANK A PRESSURE DECAY IN EITHER PROPELLANT TANK INDICATES EITHER HELIUM OR LIQUID OR VAPORIZED PROPELLANT IS LEAKING INTO THE SM. DIFFERENTIATION BETWEEN PROPELLANT AND HELIUM CANNOT BE MADE. THE POSSIBILITY EXISTS OF CORROSION WITHIN THE SM-- THE PROBABILITY OF AN EXPLOSION IS LOW FOR THE CASE OF A MONOPROPELLANT LEAK. THE MOST SERIOUS CONSEQUENCES OF SUCH A LEAK WOULD BE INABILITY TO MAINTAIN PRESSURE IN THE TANKS OR PROPELLANT DEPLETION DURING AN SPS BURN. COMMENTS MANUAL REPRESSURIZATION OF THE TANKS MAY BE ATTEMPTED PRIOR TO ANY REQUIRED SPS BURN. THE PROBABILITY OF TANK RUPTURE DUE TO REPRESSURIZATION IS CONSIDERED LOW (REF MEMO FROM SYSTEMS ENGINEERING DIVISION DATED OCTOBER 8, 1968-- SUBJECT--- CONSTRAINTS ON MANUAL PRESSURIZATION OF SPS PROPELLANT TANKS).
	16-21	LOSS OF ONE GN2 TANK PRESSURE A GN2 TANK PRESSURE BELOW 400 PSI WILL RESULT IN SLOW, PARTIAL, OR NO BALL VALVE OPERATION. BECAUSE OF THE UNPREDICTABLE NATURE OF VALVE OPERATION AT LOW PRESSURE, THE AFFECTED BANK WOULD NOT BE USED FOR SPS BURNS. THUS, LOSS OF A GN2 TANK CONSTITUTES LOSS OF SPS REDUNDANCY. NO COMMITMENT WILL BE MADE TO A PHASE REQUIRING SPS BURNS. LUNAR STAY AND LUNAR ORBIT (IF LM DPS NOT AVAILABLE FOR TEI) WOULD BE TERMINATED SINCE THE MEAN TIME TO FAILURE OF THE REDUNDANT GN2 SOURCE WOULD NOT BE AN ACCEPTABLE RISK. COMMENTS THE GN2 PRESSURE MEASUREMENT IS A SINGLE POINT OF INSTRUMENTATION. LOSS OF GN2 CAN BE CONFIRMED ONLY BY ENGINE OPERATION.
	16-22	LOSS OF ONE BANK OF BALL VALVES THE SPS NO LONGER HAS REDUNDANT CAPABILITY WITH THE LOSS OF ONE BANK OF BALL VALVES. NO COMMITMENT WOULD BE MADE TO A PHASE REQUIRING SPS BURNS. LUNAR ORBIT (IF DPS NOT AVAILABLE) AND LUNAR STAY PHASES WOULD BE TERMINATED DUE TO THE LACK OF REDUNDANCY TO PERFORM TEI. COMMENTS THE LOSS OF A BANK OF BALL VALVES MAY BE DUE TO A FAILURE IN THE GN2 SYSTEM (PREVALVE, SOLENOID CONTROL VALVE, LEAK IN PLUMBING) OR A FAILURE IN THE RACK AND PINION GEARS.
	16-23	LOSS OF BOTH GN2 TANK PRESSURES THE LOSS OF BOTH GN2 TANKS PRECLUDES USE OF THE SPS EXCEPT FOR EMERGENCIES. THE SPS MAY BE INCAPABLE OF PERFORMING A BURN-- OR WORSE, AN EXPLOSION MAY OCCUR AT IGNITION DUE TO IMPROPER MIXTURE RATIO.
	16-24	PROPELLANT FEEDLINE TEMP LESS THAN 40 DEG A TEMPERATURE OF 40 DEG F IS THE LIMIT BELOW WHICH NON-CRITICAL MANEUVERS WILL BE INHIBITED. THE TEMPERATURE BELOW WHICH THE SPS IS CONSIDERED LOST IS 25 DEG F. WHEN THE TEMPERATURE DROPS BELOW 40 DEG F, NO COMMITMENT WILL BE MADE TO A PHASE REQUIRING SPS BURNS. ADDITIONALLY, A PHASE WILL BE TERMINATED TO PRECLUDE REACHING THE CRITICAL TEMPERATURE LIMIT (ALL UNDOCKED OPERATIONS EXCEPT DESCENT). IF THE LM DPS IS AVAILABLE, AN ALTERNATE LUNAR ORBIT MISSION MAY BE SUBSTITUTED. TEI WOULD BE PERFORMED PRIOR TO THE 25 DEG F LIMIT-- THE LM DPS WOULD BE AVAILABLE AS BACKUP IN THE DOCKED CONFIGURATION. COMMENTS REFERENCE RATIONALE FOR RULE 16-14 (PROPELLANT FEEDLINE TEMPERATURE MANAGEMENT).

R	ITEM	
	16-25	FLANGE TEMP GREATER THAN 480 DEG TEMPERATURES IN EXCESS OF 480 DEG F IN THE ENGINE FLANGE AREA MAY RESULT IN FLANGE BURN-THROUGH WHICH CAN RESULT IN THE NOZZLE SEPARATING FROM THE ENGINE CHAMBER. THIS CONSTITUTES LOSS OF THE SPS. COMMENTS THE CREW HAS NO ONBOARD INDICATION OF SPS FLANGE TEMPERATURE. GROUND TELEMETRY IS THE ONLY MEANS AVAILABLE FOR DETERMINING THAT THE FLANGE TEMPERATURE CONSTRAINT HAS BEEN VIOLATED.
	16-26	CHAMBER PRESS LESS THAN 70 PSI ENGINE OPERATION AT A CHAMBER PRESSURE BELOW 70 PSI CAN RESULT IN UNSTABLE COMBUSTION WHICH MAY DAMAGE OR DESTROY THE ENGINE. THE SPS IS CONSIDERED NO-GO FOR SUBSEQUENT BURNS. COMMENTS ACTUAL TEST DATA HAS SHOWN STABLE COMBUSTION BETWEEN 60 AND 70 PSI. THIS AREA IS CONSIDERED MARGINAL AND SHOULD BE AVOIDED.
	16-27	LACK OF ULLAGE CAPABILITY LACK OF ULLAGE CAPABILITY WITH EMPTY STORAGE TANKS CAN RESULT IN HELIUM INGESTION INTO THE ZERO-G CAN AND ENGINE FEEDLINES AT IGNITION. THE WORST CASE RESULT OF HELIUM INGESTION WOULD BE THE PRESENCE OF A HELIUM BUBBLE AT THE OXIDIZER BALL VALVES. THE POSSIBILITY THEN EXISTS THAT A FUEL LEAD, AND CONSEQUENTLY ROUGH COMBUSTION, WOULD OCCUR ON A SUBSEQUENT START. ONE NO ULLAGE SPS BURN CAN BE PERFORMED. THE SPS IS CAPABLE OF INGESTING SMALL AMOUNTS OF HELIUM THROUGH THE ENGINE WITHOUT ADVERSE EFFECTS. COMMENTS NO COMMITMENT WILL BE MADE TO A PHASE REQUIRING SPS BURNS.
	16-28	DELTA P BETWEEN FUEL AND OXIDIZER GREATER THAN 20 PSI A DIFFERENCE IN PROPELLANT TANK PRESSURES IN EXCESS OF 20 PSI CAN RESULT IN A MIXTURE RATIO OUTSIDE THE DESIRED OPERATING RANGE. ROUGH COMBUSTION COULD RESULT. COMMENTS MANUAL REPRESSURIZATION WOULD BE CONSIDERED PRIOR TO A BURN TO BRING THE DELTA P WITHIN THE 20 PSI LIMIT.
	16-29	LEAK OR COMPLETE LOSS OF HELIUM LOSS OF THE HELIUM SOURCE DUE TO A LEAK OR MULTIPLE VALVE FAILURE IMPOSES BLOWDOWN OPERATION ON THE SPS. THE DELTA V CAPABILITY OF THE SPS WILL BE DETERMINED FROM BLOWDOWN CURVES FURNISHED IN THE SODB. COMMENTS OPERATION OF THE SPS IN A BLOWDOWN MODE IS ACCEPTABLE, PROVIDING ALL OTHER CONSIDERATIONS ARE MET (I.E., INLET PRESSURES, DELTA P LESS THAN 20, ET CETERA). BLOWDOWN CAPABILITY IS A FUNCTION OF PROPELLANT QUANTITY AND TANK PRESSURE AT IGNITION.

R	ITEM	
	17-1	LAUNCH LOSS OF A SINGLE SM RCS QUAD DOES NOT PRECLUDE ROTATION OR TRANSLATION CAPABILITY. TRANSLATION IN THE Y OR Z AXES WILL BE SINGLE JET (IN THE AFFECTED AXIS)-- THE ROLL JETS IN THE OTHER AXIS WILL COUNTERACT THE ROLL TORQUE OF THE SINGLE TRANSLATION JET. THIS IS AN EXPENSIVE MEANS OF TRANSLATION FROM A PROPELLANT STANDPOINT. LOSS OF A QUAD REDUCES BY ONE-HALF THE RCS DELTA V CAPABILITY. IF RCS DEORBIT CAPABILITY DOES NOT EXIST AT INSERTION, THE SPS IS STILL AVAILABLE FOR DEORBIT. DEORBIT FROM EARTH ORBIT IS LESS HAZARDOUS THAN A LAUNCH ABORT. THE PROBABILITY OF MULTIPLE FAILURES LEADING TO THE LOSS OF TWO OR MORE QUADS DURING THE RELATIVELY SHORT SPAN OF LAUNCH IS CONSIDERED LOW. THEREFORE, THERE ARE NO SM RCS FAILURES WHICH ARE CONSIDERED CAUSE FOR ABORT.
	17-2	EARTH ORBIT PHASE THE CAPABILITY WITH LOSS OF ONE QUAD IS RELATED IN THE RATIONALE FOR RULE 17-1. THE PRIME CONSIDERATION FOR THE ORBIT SITUATION IS MAINTENANCE OF BACKUP DEORBIT CAPABILITY. SINCE SM RCS DEORBIT DELTA V IS DECREASED ON THE ORDER OF 50 PERCENT BY LOSS OF A QUAD, ORBIT SHAPING MAY BE NECESSARY TO PRESERVE SM RCS DEORBIT CAPABILITY. LOSS OF TWO ADJACENT QUADS PRECLUDES ALL TRANSLATION CAPABILITY. SINCE BOTH SM AND HYBRID DEORBITS ARE DEPENDENT UPON TRANSLATIONS, THE MISSION WILL BE TERMINATED WITH THE ONLY REMAINING DEORBIT TECHNIQUE, SPS. LOSS OF TWO OPPOSITE QUADS PRECLUDES PRECISE ATTITUDE CONTROL IN EITHER +/- PITCH OR +/- YAW AND TRANSLATION IN EITHER +/- Y OR +/- Z. EVEN THOUGH +/- X TRANSLATION CAPABILITY REMAINS, IT IS IMPOSSIBLE TO PERFORM EXTENDED TRANSLATIONS SINCE ROTATIONAL MOTION (INDUCED BY CG DISPLACEMENT FROM THE X AXIS) CANNOT BE CONTROLLED IN THE AFFECTED AXIS. MISSION TERMINATION IS REQUIRED FOR THE SAME REASONS STATED ABOVE FOR LOSS OF TWO ADJACENT QUADS.
	17-3	TRANSLUNAR COAST THE CAPABILITY WITH LOSS OF ONE QUAD IS GIVEN IN THE RATIONALE FOR MR 17-1. SUBSEQUENT LOSS OF AN ADJACENT QUAD PRECLUDES ALL TRANSLATION CAPABILITY. THE RCS WOULD THEN BE UNAVAILABLE FOR MCC'S, TRIMMING AFTER SPS BURNS, AND ULLAGES AFTER THE SPS STORAGE TANKS WERE EMPTY. LOSS OF THE OPPOSITE QUAD WOULD PRECLUDE PRECISE ATTITUDE CONTROL IN ONE AXIS AND TRANSLATION CAPABILITY IN ONE AXIS (+/- Y, +/- Z). COMMENTS TERMINATION OF THE TRANSLUNAR COAST PHASE WILL BE DEPENDENT ON CAPABILITY OF THE LM RCS TO PROVIDE ATTITUDE CONTROL FOR A FLY-BY MISSION.
	17-4	LUNAR ORBIT THE LOSS OF A SINGLE QUAD IMPOSES SINGLE JET ROTATIONAL CONTROL IN ONE AXIS. THIS IS A NORMAL MODE OF OPERATION IN LUNAR ORBIT FOR PROPELLANT MANAGEMENT. THE POSSIBILITY OF A SECOND QUAD FAILURE IS CONSIDERED UNLIKELY-- HOWEVER, IN THE EVENT OF SUCH A FAILURE, THE LM ASCENT STAGE WOULD BE RETAINED FOR ATTITUDE CONTROL PRIOR TO AND POST TEI. THUS THE LUNAR ORBIT AND LUNAR STAY PHASES WILL NOT BE TERMINATED FOR LOSS OF A SINGLE QUAD. UNDOCKING WILL BE INHIBITED DUE TO LOSS OF THREE-AXIS TRANSLATION (WHICH PRECLUDES CSM ACTIVE DOCKING). DOI WILL BE INHIBITED SINCE THE CSM RESCUE CAPABILITY IS GREATLY DEGRADED. ONCE PDI HAS BEEN PERFORMED, COMMITMENT HAS BEEN MADE TO A RESCUE SITUATION. THE NOMINAL MISSION WILL BE CONTINUED FOR QUAD LOSS AFTER DOI. FOR LOSS OF TWO QUADS, THE LUNAR STAY WILL BE TERMINATED, EITHER TRANSLATION CAPABILITY OR THREE AXIS ATTITUDE CONTROL WILL BE LOST FOR LOSS OF TWO QUADS. THE LM ASCENT STAGE WILL BE RETAINED FOR TEI.

R	ITEM	
	17-15	PROPELLANT GAGING

RCS GAGING CAN BE ACCOMPLISHED TWO WAYS. OBVIOUSLY, THE MOST ACCURATE OF THE TWO IS PRIME. THERE ARE SEVERAL REASONS WHY THE RTCC EQUATION IS MORE ACCURATE THAN THE ONBOARD P/T TECHNIQUE. BASIC TO THE ONBOARD GAUGE IS THE P/T TRANSDUCER AND ASSOCIATED CIRCUITRY WHICH IS NOTHING MORE THAN SOME HARDWARE REPRESENTING A GAS EQUATION. AT BEST, IT APPROXIMATES THE EQUATION, GIVING RISE TO A SIGNIFICANT ERROR AT THE OUTSET (5 PERCENT). THE RTCC MODELS THE GAS EQUATION EXACTLY, AND IN ADDITION COMPENSATES FOR HE COMPRESSIBILITY IN THE FUEL AND OX TANKS USING MANIFOLD PRESSURES. IT ALSO COMPENSATES FOR EXPULSION EFFICIENCY AND HAS A VARIABLE MIXTURE RATIO. EVEN THROUGH SOME OF THESE FACTORS ARE TAKEN INTO ACCOUNT IN THE NOMOGRAPH TO CORRECT THE ONBOARD READING, THE ACCURACY CANNOT BE IMPROVED TO THAT OF THE GROUND EQUATION. THE PRESENT ACCURACY FIGURES FOR THE TWO TECHNIQUES WERE OBTAINED FROM NR ANALYTICAL STUDIES OF THE TWO METHODS. THESE STUDIES ARE DOCUMENTED IN SD-68-167, REV A, AUGUST 16, 1968, SUBJECT--- CERTIFICATION ANALYSIS - SM RCS PROPELLANT QUANTITY GAUGING SYSTEMS.

| | 17-16 | QUAD PROPELLANT BALANCE |

THE DESIRED PROPELLANT DIFFERENCE BETWEEN QUADS IS ACTUALLY DETERMINED BY EACH QUAD'S RELATIONSHIP TO ITS VARIOUS REDLINE VALUES. HOWEVER, EXPERIENCE HAS SHOWN THAT AN UNBALANCE IN EXCESS OF 30 TO 50 POUNDS SHOULD NOT NORMALLY EXIST. ANY UNBALANCE IN EXCESS OF THAT CAN RESULT IN LATER PROBLEMS, ESPECIALLY IF IT IS DESIRED TO CHANGE CONTROL TECHNIQUES FOR A LARGER MANEUVER, SUCH AS CHANGING FROM G&N TO SCS.

COMMENTS

PROP ISOLATION VALVES SHOULD NOT BE USED FOR QUAD BALANCE TO PRECLUDE INADVERTANT EVACUATION OF THE PROPELLANT LINES. IF THE JETS ARE FIRED WHILE THE PROP VALVES ARE CLOSED, AN OFF-NOMINAL MIXTURE RATIO WILL RESULT. ENGINES MAY THEN BE DESTROYED BY EXPLOSIONS DUE TO UNSTABLE BURNING.

IF PROPELLANT IS TRAPPED BETWEEN THE ISOLATION VALVES AND ENGINE VALVES, THERMAL EXPANSION OF THE TRAPPED LIQUID MAY RUPTURE THE PROPELLANT LINES. PRESSURE WILL INCREASE 100 TO 200 PSI FOR EVERY 1 DEG F TEMPERATURE INCREASE. BEFORE ELECTRICAL ISOLATION OF THE QUAD, THE JETS SHOULD BE FIRED TO DECREASE THE PRESSURE OF THE TRAPPED PROPELLANT. AFTER THE PROP ISO VALVE IS REOPENED, THE FIRST JET FIRING SHOULD BE AT LEAST 1 SECOND IN DURATION TO BURN OUT THE RESIDUE WHICH MAY HAVE FORMED DUE TO UNSTABLE BURNING.

THE CASE OF TRAPPED PROPELLANT IS CONSIDERED MORE HAZARDOUS THAN FIRING THE JETS WITH THE PROP ISO VALVES CLOSED. NEITHER CASE IS AN ACCEPTABLE MODE OF OPERATION.

| | 17-17 | SECONDARY PROPELLANT FUEL PRESSURE VALVE |

CROSSOVER INTO THE SECONDARY RCS FUEL TANKS OCCURS AT A USABLE PROPELLANT QUANTITY OF 119 LB. DUE TO THE ACCURACY OF THE RTCC PVT PROGRAM, CROSSOVER WOULD OCCUR AT 119 +/- 20 LB USABLE PROPELLANT. A BIAS OF 20 LB IS INTRODUCED INTO THE CALCULATION TO INSURE THAT THE QUANTITY REMAINING IS NOT LESS THAN THE VALUE CALCULATED BY THE RTCC. THUS, CROSSOVER OCCURS AT A DISPLAYED VALUE OF 99 +/- 20 LB. ALLOWING THE MANIFOLD PRESSURE TO REACH 150 PSIA IS THE PREFERRED METHOD OF DETERMINING CROSSOVER, UNLESS AN UPCOMING PERIOD OF HIGH USAGE (ULLAGE, ETC) WILL DROP THE VALUE OF WPU BELOW 119 LB REMAINING.

COMMENTS

A MANIFOLD PRESSURE OF 150 PSIA WILL TRIGGER THE C&W LIGHT FOR THE QUAD.

R	ITEM

17-20 SUSTAINED LEAK IN HELIUM TANK

A HELIUM SOURCE LEAK IMPOSES BLOWDOWN OPERATION IN A QUAD WHEN THE SOURCE PRESSURE DROPS BELOW 400 PSI. THE QUAD IS CAPABLE OF NORMAL OPERATION ABOVE 400 PSI-- BLOWDOWN OPERATION RESULTS IN DEGRADED PERFORMANCE.

FOR LOSS OF A SINGLE QUAD, COMMITMENT WILL NOT BE MADE TO A SUBSEQUENT PHASE WHICH WOULD EXTEND THE TIME REQUIRED FOR THE QUAD TO FUNCTION. THE RATIONALE FOR THE GENERAL SM RCS RULES (17-1 THROUGH 17-4) COVERS THE QUAD LOSS CASE FOR INDIVIDUAL PHASES.

COMMENTS

BLOWDOWN CAPABILITY IS A FUNCTION OF PROPELLANT REMAINING AND MANIFOLD PRESSURE. A QUAD REMAINS OPERATIVE UNTIL HE MANIFOLD PRESSURE DROPS BELOW 75 PSI.

17-21 SUSTAINED LEAK BELOW HE ISOLATION VALVE

PRESSURE LOSS BELOW THE HELIUM ISOLATION VALVES MAY OR MAY NOT CAUSE LOSS OF THE QUAD, DEPENDENT ON LEAK RATE AND LOCATION. IN ANY CASE, THE PROBABILITY OF HAVING BOTH A FUEL AND OXIDIZER LEAK, THUS CREATING A HAZARDOUS SITUATION IN THE SM, IS LOW. IF THE LEAK CAN BE STOPPED WITH THE PROPELLANT ISOLATION VALVES, THE QUAD MAY BE USED IN AN EMERGENCY SITUATION. THERE IS A POSSIBILITY THE LEAK MAY BE AT THE ENGINE VALVE AND ON THE OXIDIZER SIDE, THUS SETTING UP A POTENTIALLY EXPLOSIVE SITUATION IF THE QUAD WERE TO BE USED. IF THE LEAK IS NOT STOPPED WITH THE PROPELLANT ISOLATION VALVES, THERE IS A REPRESS PROCEDURE WHICH CAN BE USED IN AN ATTEMPT TO IDENTIFY WHETHER THE LEAK IS HELIUM OR PROPELLANT. IF THE LEAK IS PROPELLANT, THE REPRESS PROCEDURE ITSELF WILL FORCE MORE PROPELLANT INTO THE SM WHICH IS NOT A DESIRABLE SITUATION. AGAIN, THE QUAD MAY BE USABLE IN AN EMERGENCY SITUATION, IF THE MANIFOLD PRESSURE CAN BE KEPT UP. IF THE LEAK IS HELIUM, THE QUAD IS ALSO USABLE IN AN EMERGENCY SITUATION, AGAIN AS LONG AS THE MANIFOLD PRESSURE IS KEPT UP. THE POINT HERE IS THAT EVEN THOUGH THE QUAD MAY OR MAY NOT BE USABLE IN AN EMERGENCY SITUATION, IT SHOULD BE CONSIDERED UNUSABLE FOR ANY FURTHER MISSION ACTIVITIES, INCLUDING THE CURRENT ACTIVITY. REF RATIONALE FOR RULES 17-1, 2, 3, 4 FOR LOSS OF ONE QUAD.

COMMENTS

THE RATIONALE FOR RULE 17-16 DISCUSSES THE EFFECTS OF CLOSING PROPELLANT ISOLATION VALVES.

17-22 PACKAGE TEMP

A PACKAGE TEMPERATURE OF 55 DEG CORRESPONDS TO A TEMPERATURE OF 30 DEG F ON THE ENGINE NOZZLE BELL NUT. THIS IN TURN CORRESPONDS TO A TEMPERATURE AT THE INJECTOR WHICH COULD RESULT IN OXIDIZER FREEZING. THIS IS PARTICULARY TRUE FOR A PERIOD OF SHORT DURATION THRUSTER FIRINGS-- SHORT IMPULSE FIRINGS CAUSE EVAPORATIVE COOLING, THUS INCREASING THE RISK OF OXIDIZER FREEZING. THE QUAD IS CONSIDERED UNUSABLE FOR A PACKAGE TEMP LESS THAN 55 DEG F. REF RATIONALE FOR RULES 17-1, 2, 3, 4 FOR LOSS OF ONE QUAD.

COMMENTS

OXIDIZER FREEZES AT 12 DEG F.

17-23 LOSS OF INDIVIDUAL THRUSTERS

INDIVIDUAL THRUSTERS CAN BE ELECTRICALLY ISOLATED, USING THE AUTO RCS SELECT SWITCHES. PITCH AND YAW ROTATIONAL MOTION IS AVAILABLE THROUGH TWO THRUSTERS PER AXIS PER DIRECTION AND ROLL BY FOUR THRUSTERS PER AXIS PER DIRECTION. Y AND Z TRANSLATIONS ARE AVAILABLE THROUGH ONE THRUSTER PAIR PER AXIS PER DIRECTION AND X TRANSLATIONS THROUGH TWO THRUSTER PAIRS PER AXIS PER DIRECTION.

R	ITEM	
	18-1	LAUNCH LOSS OF ONE CM RCS RING IS NOT CAUSE FOR ABORT SINCE ENTRY OR ABORT ATTITUDE CONTROL CAN BE ACCOMPLISHED WITH A SINGLE RING. HOWEVER, LOSS OF ONE RING WILL REQUIRE ENTRY INTO NEXT BEST PTP SINCE THE SYSTEMS ARE NO LONGER REDUNDANT, AND ONE ADDITIONAL FAILURE IN THE REMAINING RING (E.G., HELIUM LEAK) WOULD REQUIRE USING THE ''CONTINGENCY SM RCS SPIN-UP'' METHOD (ORIENT S/C IN ENTRY ATTITUDE AND ESTABLISH A ROLL RATE WITH THE SM RCS PRIOR TO CM/SM SEP). EVEN THOUGH THIS IS CONSIDERED A MARGINAL METHOD OF SAFE ENTRY CONTROL, IT IS THE ONLY OPTION REMAINING. LOSS OF BOTH CM RCS RINGS IN THE MODE I ABORT REGION IS JUSTIFICATION FOR AN ABORT, SINCE CM RCS CONTROL IS NOT REQUIRED FOR MODE I ABORTS. A MODE I ABORT IS CONSIDERED OPERATIONALLY PREFERABLE TO PERFORMING A CONTINGENCY SM RCS SPIN-UP WHICH IS THE ONLY REMAINING TECHNIQUE IF THE S/C IS ALLOWED TO GO INTO ORBIT. AFTER TOWER JETTISON, LOSS OF BOTH CM RCS RINGS IS NOT CAUSE FOR ABORT SINCE THE ABILITY TO PERFORM A SAFE ENTRY INTO THE ATLANTIC AT THE END OF THE FIRST REV STILL EXISTS BY USING THE CONTINGENCY SM RCS SPIN-UP PRIOR TO CM/SM SEPARATION. THIS METHOD OF ENTRY IS CONSIDERED OPERATIONALLY PREFERABLE TO PERFORMING A MODE II OR MODE III ABORT, SINCE BOTH OF THESE MODES REQUIRE CM RCS ATTITUDE CONTROL TO ENTER SAFELY. ENTRY WOULD BE ACCOMPLISHED AS SOON AS PRACTICAL, SINCE ADDITIONAL FAILURES COULD PRECLUDE PERFORMING THE SM RCS SPIN-UP. COMMENTS HELIUM SUPPLY LOSSES CAN BE CONFIRMED BY USING INDEPENDENT INSTRUMENTATION (PRESSURE AND TEMPERATURE TRANSDUCERS, I.E., LOSS OF PRESSURE RESULTS IN CORRESPONDING TEMPERATURE DROP). HELIUM MANIFOLD LEAKS CAN BE CONFIRMED BY REDUNDANT PRESSURE TRANSDUCERS. ONE TRANSDUCER IS TELEMETERED, AND THE OTHER IS ON AN ONBOARD METER. IN ADDITION, BOTH TRANSDUCERS IN EITHER RING WILL TRIGGER A C&W LIGHT IF A PRESSURE DROP IS SENSED AFTER SYSTEM PRESSURIZATION.
	18-2 18-3 18-4	LUNAR ORBIT, LUNAR STAY PHASES, LM DESCENT PHASE THE RATIONALE FOR LOSS OF ONE OR BOTH RINGS IS STATED IN THE RATIONALE FOR MISSION RULE 18-1. IT SHOULD BE NOTED THAT A RING FAILURE IN ORBIT ALSO SEVERLY REDUCES THE DELTA V AVAILABLE FOR A HYBRID DEORBIT (80 FPS-130 LBS). EARLY ARMING OF THE CM RCS CAN RESULT IN TWO POTENTIAL PROBLEMS--- (1) AFTER ARMING, THE HELIUM SUPPLY IS OPEN TO THE RELIEF VALVES. SMALL VARIATIONS IN THE HELIUM TEMPERATURE (10 DEG) CAN RESULT IN A PRESSURE INCREASE SUFFICIENT TO UNSEAT THE RELIEF VALVES (30 PSI INCREASE IN THE LINES CAN CRACK THE VALVES). CRACKING A RELIEF VALVE ALWAYS RAISES THE POSSIBILITY OF ITS NOT RESEATING PROPERLY, THUS LOSING THE HELIUM SUPPLY. (2) IF HEATING OF THE CM RCS THRUSTERS IS REQUIRED, AN IMPROPERLY SEATED PROPELLANT ISOLATION VALVE COULD RESULT IN A MONOPROPELLANT SITUATION EXISTING DUE TO THE VALVES BEING OPEN DURING THE HEATING AS WELL AS THE ATTENDANT LOSS OF PROPELLANT. THE PROPELLANT ISOLATION VALVE POSITION INSTRUMENTATION DOES NOT GIVE THE CREW A POSITIVE CLOSED INDICATION. FOR LOSS OF A SINGLE RING, LUNAR OPERATIONS WILL CONTINUE-- ALL OTHER PHASES WILL BE TERMINATED, THE MEAN TIME TO FAILURE (AS MUCH AS 56 HRS) OF THE SECOND RING IS A RISK THAT IS ACCEPTED DURING LUNAR OPERATIONS. WITH LOSS OF A SINGLE RING AND DEGRADATION IN THE SECOND, ALL PHASES EXCEPT LM DESCENT WOULD BE TERMINATED AS THE CM RCS CAPABILITY IS DECREASING WITH TIME. THERE IS PRESENTLY NO KNOWN ACCEPTABLE METHOD FOR PERFORMING A HIGH SPEED ENTRY WITHOUT CM RCS CAPABILITY. COMMENTS A SOURCE PRESSURE OF 2800 PSI IS SUFFICIENT TO EXPEL ALL THE PROPELLANT IN A RING. AN OPENED, UNUSED, STABLE RING HAS ABOUT 3500 PSI SOURCE PRESSURE. TO ARM THE RINGS--- (1) BOTH THE SEQ ARMING BUS AND THE PYRO BUS MUST BE POWERED FOR MANUAL ACTIVATION OF THE CM RCS PRESS SQUIB VALVES OR FOR A SHORT ACROSS THE CM RCS PRESS SWITCH TO CAUSE ARMING. (2) THE SEQ ARMING BUS, THE SEQ LOGIC BUS, AND THE PYRO BUS MUST BE POWERED FOR ANY INADVERTENT AUTOMATIC ACTIVATION OF THE CM RCS PRESSURIZATION SQUIB VALVES. THESE BUSSES ARE ONLY POWERED DURING LAUNCH, SLA SEP, LM WITHDRAWAL, LM FINAL SEP, AND ENTRY. HENCE, THE PROBABILITY OF INADVERTENT ARMING IS FAIRLY REMOTE. ALSO, THE CM RCS PRESSURIZATION SWITCH IS GUARDED. IT SHOULD ALSO BE POINTED OUT THAT THE RINGS CANNOT BE INDIVIDUALLY ARMED. ALL HELIUM ISOLATION SQUIB VALVES ARE ACTIVATED IN PARALLEL.

R	ITEM	
	18-10	THRUSTER TEMP CONTROL CM RCS THRUSTERS WILL BE HEATED WHEN REQUIRED TO PRECLUDE THE POSSIBILITY OF OXIDIZER FREEZING AT THE ENGINE. COMMENTS OXIDIZER FREEZES AT 12 DEG F PROPELLANT TEMPERATURE. HEATING IS RECOMMENDED WHEN ANY INJECTOR TEMP IS BELOW 28 DEG F. ONLY SIX THRUSTERS HAVE TEMPERATURE MEASUREMENTS ON THEM--- NUMBERS 12, 14, 16, 21, 24 AND 25.
	18-11	HELIUM INTERCONNECT INTERCONNECTING BOTH RINGS WILL RESULT IN THE INTERCONNECTION OF HELIUM, FUEL, AND OXIDIZER, SINCE ONE SWITCH ACTIVATION SIMULTANEOUSLY FIRES ALL SQUIB ISOLATION VALVES. HENCE, THIS PROCEDURE SHOULD ONLY BE USED WHEN BOTH RINGS ARE INOPERATIVE. OBVIOUSLY, WHEN INTERCONNECTING, ONE RING MAY BE DUMPED THROUGH THE OTHER'S LEAK, BUT THERE IS NO OTHER ALTERNATIVE. COMMENTS INTERCONNECTING THE RINGS REQUIRES THAT THE CREW POWER THE SEQ ARMING BUS, THE PYRO BUS AND THE RCS LOGIC BUS, AND THEN DEPRESS THE CM PRPLNT DUMP SWITCH FOR ABOUT 2 SECONDS.

R	ITEM	
	18-20	LOSS OF HELIUM SUPPLY PRESS LOSS OF THE HELIUM SUPPLY PRESSURE RESULTS IN BLOWDOWN OPERATION IN THE AFFECTED RING. THE TWO RINGS CAN BE INTERCONNECTED SO THE GOOD SOURCE CAN BE MADE AVAILABLE FOR BOTH RINGS. ONE SOURCE CAN EXPEL APPROXIMATELY 65 PERCENT OF THE TOTAL PROPELLANT (BOTH RINGS) BEFORE BLOWDOWN STARTS. TOTAL BLOWDOWN CAPABILITY WOULD EXIST IN BOTH RINGS AFTER SOURCE DEPLETION. COMMENTS THE MEAN TIME BETWEEN FAILURE OF THE SECOND SOURCE IS A RISK THAT IS NOT CONSIDERED ACCEPTABLE. IF TERMINATION OF A PHASE WILL DECREASE BY 24 HOURS THE TIME THE SECOND SOURCE MUST REMAIN INTACT, THE PHASE WILL BE TERMINATED.
	18-21	LOSS OF HELIUM MANIFOLD PRESS LOSS OF THE HELIUM MANIFOLD PRESSURE CONSTITUTES LOSS OF A RING. FOR A SMALL LEAK, THE RING MAY BE USABLE. THE RINGS SHOULD NOT BE INTERCONNECTED TO PRECLUDE THE POSSIBILITY OF DUMPING THE GOOD SOURCE THROUGH THE LEAK. COMMENTS A PHASE WILL BE TERMINATED IF THE TIME REQUIRED FOR THE SECOND MANIFOLD TO FUNCTION IS DECREASED BY 24 HOURS.
	18-22	CM RCS ARMED ARMING OF THE CM RCS REQUIRES ARMING THE SEQUENTIAL AND LOGIC BUSES AND ACTIVATION OF A GUARDED SWITCH. ACTIVATION OTHER THAN BY THE CREW WOULD BE A RESULT OF MULTIPLE ELECTRICAL FAILURES. THE RATIONALE FOR INADVERTENT ARMING IS COVERED IN THE RATIONALE FOR RULE 18-4.

6 LM SYSTEMS

R	ITEM

EMU/EVA

19-1 TO INITIATE AND CONTINUE LUNAR SURFACE EVA, THE EMU MUST PROVIDE THE FOLLOWING MINIMUM CAPABILITIES---

A. CRITICAL INSTRUMENTATION

1. DEFINITION (REF MR 19-42)

CRITICAL INSTRUMENTATION IS CONSIDERED LOST IF THE FOLLOWING INDICATORS FAIL TO PROVIDE (BY GROUND OR CREW READOUT) DATA NECESSARY TO DEFINE SYSTEM OPERATION AND MALFUNCTIONS.

(A) PLSS O2 PRESS OR PLSS O2 QTY INDICATOR

(B) PGA PRESS GAGE OR LOW PGA PRESS TONE OR PGA PRESS

(C) LOW VENT FLOW TONE OR PLSS BATTERY CURRENT OR SUBLIMATOR O2 OUT TEMPERATURE

2. GENERAL OPERATIONAL IMPACT

LOSS OF CRITICAL INSTRUMENTATION WOULD RESULT IN AN INABILITY TO MONITOR LIFE SUPPORT SYSTEMS PERFORMANCE FOR CREWMAN SAFETY. THE PLSS O2 PRESS OR THE PLSS O2 QTY INDICATOR IS REQUIRED TO SAFELY MONITOR AND MANAGE THE PLSS OXYGEN SUPPLY. THE PGA PRESS GAGE, LOW PGA PRESS TONE OR PGA PRESS IS REQUIRED TO SAFELY MONITOR PGA PRESSURE. THE LOW VENT FLOW TONE OR PLSS BATTERY CURRENT OR SUBLIMATOR O2 OUT TEMPERATURE IS REQUIRED TO DETECT THE LOSS OF OXYGEN CIRCULATION (PLSS FAN FAILURE). LOW PGA PRESS AND LOW VENT FLOW WARNING TONES ARE CONSIDERED SUFFICIENT FOR CRITICAL INSTRUMENTATION OF THE APPROPRIATE SYSTEMS SINCE THE ASSOCIATED FLAGS ARE ONLY PASSIVE WARNING INDICATIONS TO THE CREWMAN.

3. SPECIFIC OPERATIONAL IMPACT (REF MR 19-1B, 19-33)

(A) NOMINAL EVA (TWO-MAN)

LOSS OF THE TM CAPABILITY ALONE WOULD REQUIRE THE ONBOARD CRITICAL INSTRUMENTATION IN ADDITION TO PERIODIC READOUTS FROM THE CREWMAN IN ORDER TO SATISFY THE INSTRUMENTATION REQUIREMENT. LOSS OF THE CREWMAN'S INSTRUMENTATION WOULD REQUIRE PERIODIC CONFIRMATION OF SYSTEMS OPERATION BY THE GROUND. THE INABILITY TO VERIFY CRITICAL SYSTEMS PERFORMANCE WOULD RESULT IN TERMINATION OF THE EVA AND/OR INITIATING A ONE-MAN EVA.

(B) ALTERNATE EVA (ONE-MAN)

AN ALTERNATE OR ONE-MAN EVA WOULD BE CONSTRAINED BY THE SAME CRITICAL INSTRUMENTATION LIMITATIONS AS FOR THE NOMINAL EVA.

B. THERMAL CONTROL

1. DEFINITION (REF MR 19-2)

THERMAL CONTROL IS CONSIDERED LOST IF---

(A) LCG/LTL CIRCULATION IS LOST.

(B) THE LCG H2O TEMPERATURE AND SUBLIMATOR O2 OUTLET TEMPERATURE ARE 50 DEG F AND INCREASING AND THE LCG H2O DELTA T IS LESS THAN 5 DEG F AND DECREASING WITH THE DIVERTER VALVE IN ''MAX'' POSITION (THIS CONSTITUTES A FAILED SUBLIMATOR).

(C) UNABLE TO SUPPLY H2O TO THE SUBLIMATOR.

A LOSS OF LCG/LTL COOLING WOULD BE INDICATED BY NON-CORRELATION OF THE LCG H2O TEMP AND LCG H2O DELTA T AND WOULD BE A RESULT OF EITHER PUMP DEGRADATION OR EXCESSIVE COOLANT LEAKAGE. AN LCG H2O TEMPERATURE OF 50 DEG F AND INCREASING IN COMBINATION WITH AN LCG H2O DELTA T OF LESS THAN 5 DEG F AND DECREASING IN ''MAX'' DIVERTER VALVE POSITION IS A DIRECT INDICATION OF A SUBLIMATOR FAILURE. INABILITY TO SUPPLY H2O TO THE SUBLIMATOR WOULD RESULT FROM BLOCKAGE IN EITHER THE FEED H2O SUPPLY LINE OR THE GAS SEPARATOR, BLADDER RUPTURE, H2O SUPPLY LINE LEAK, OR FEED H2O DEPLETION.

R	ITEM
	19-1 CONT

2. GENERAL OPERATIONAL IMPACT

THE PRIME METHOD FOR THERMAL CONTROL OF THE EVA CREWMAN IS BY HEAT TRANSFER VIA THE LCG/LTL. SHOULD THIS CAPABILITY BE LOST, THE BACKUP SYSTEM AVAILABLE WOULD BE THE BSLSS OR THE OPS (HI PURGE FLOW MODE) DUE TO LIMITED LIFETIME OF EITHER THE BSLSS OR THE OPS, EVA WILL NOT BE INITIATED, OR IF IN PROGRESS, WILL BE TERMINATED IF THERMAL CONTROL IS LOST.

3. SPECIFIC OPERATIONAL IMPACT (REF MR 19-1B, 19-3, 19-30)

NOMINAL OR ALTERNATE EVA

LOSS OF THERMAL CONTROL WOULD PRECLUDE COMMITTING TO, OR CONTINUATION OF THE EVA. IF THE LOSS OCCURS DURING THE EVA, ACTIVATION OF THE OPS OR THE BSLSS MAY BE NECESSARY TO REDUCE HEAT STORAGE IN THE CREWMAN. IF THE LOSS OF THERMAL CONTROL IS ISOLATED TO SUBLIMATOR BREAK-THROUGH, THE CREWMAN MAY ATTEMPT A WET SUBLIMATOR RESTART.

C. PRIMARY O2 SUBSYSTEM

1. DEFINITION (REF MR 19-2)

THE PRIMARY OXYGEN SUBSYSTEM IS CONSIDERED LOST IF---

(A) THE SOURCE PRESSURE READING IS LESS THAN 135 PSIA (TM) OR 5 PERCENT (GAGE)

(B) IT IS UNABLE TO SUPPLY O2 TO THE OXYGEN VENTILATION LOOP

(C) EMU PRESSURE REGULATION IS IMPROPER (LESS THAN 3.75 OR GREATER THAN 4.05 PSID)

THE MINIMUM SOURCE PRESSURE CRITERION CONSISTS OF THE PLSS O2 PRESS INDICATOR READOUT ERROR (+/- 45 PSIA) AND THE MINIMUM UPSTREAM PRESSURE (100 PSIA) AT WHICH THE REGULATOR IS CAPABLE OF SUPPLYING ADEQUATE MAKEUP OXYGEN TO SUSTAIN THE EXPECTED METABOLIC LOADS. EMU PRESSURE REGULATION IS CONSIDERED LOST IF PGA PRESSURE CANNOT BE MAINTAINED AT 3.9 +/- .15 PSIA. A SUSTAINED PGA PRESSURE OF LESS THAN 3.75 PSIA AND DECREASING WOULD BE UNACCEPTABLE AS IT MAY FAIL TO PROVIDE ADEQUATE O2 PARTIAL PRESSURE TO SAFELY SUSTAIN THE CREWMAN. A SUSTAINED PGA PRESSURE OF GREATER THAN 4.05 PSIA AND INCREASING WILL RESULT IN REDUCED PGA MOBILITY AND EVENTUAL LOSS OF THE PRIMARY OXYGEN SUPPLY THROUGH THE PGA RELIEF VALVE.

2. GENERAL OPERATIONAL IMPACT (REF MR 19-11, 19-14)

LOSS OF THE PRIMARY O2 SUPPLY WOULD NECESSITATE THE USE OF THE OPS TO SUPPLY OXYGEN FOR PRESSURIZATION AND METABOLIC CONSUMPTION. REDUNDANCY OF OXYGEN SOURCES IS LOST. LOSS OF EMU PRESSURE REGULATION COULD RESULT IN THE USE OF THE OPS (MAKEUP MODE) TO PROVIDE PROPER PRESSURE REGULATION.

3. SPECIFIC OPERATIONAL IMPACT (REF MR 19-1B, 19-2, 19-16, 19-31)

NOMINAL OR ALTERNATE EVA

LOSS OF THE PLSS O2 PRESSURE REGULATOR PROHIBITS USE OF THAT PLSS FOR EVA. SHOULD A PLSS O2 PRESSURE REGULATOR LOSS OCCUR DURING THE EVA, THE OPS WILL BE ACTIVATED AND THE EVA TERMINATED.

LOSS OF A PRIMARY O2 SUPPLY DURING CHECKOUT PRECLUDE COMMITTING THAT PLSS TO EVA. LOSS OF THE PRIMARY O2 SUPPLY DURING EVA WOULD REQUIRE ACTIVATION OF THE OPS IN A MAKEUP MODE TO PROVIDE O2 FOR PRESSURIZATION AND METABOLIC CONSUMPTION. EVA WILL BE TERMINATED FOR LOSS OF O2 SUPPLY REDUNDANCY.

D. PLSS FAN(S)

1. DEFINITION

THE PLSS FAN IS CONSIDERED LOST IF IT CANNOT MAINTAIN A MINIMUM OF 5.3 ACFM O2 FLOW THROUGH THE OXYGEN VENTILATION LOOP AND PGA.

AN O2 FLOW OF LESS THAN 5.3 ACFM IS INADEQUATE TO REMOVE CO2 FROM THE ORAL-NASAL AREA OF THE CREWMAN FOR NOMINAL METABOLIC PROFILES.

R	ITEM
	19-1 CONT

2. GENERAL OPERATIONAL IMPACT

LOSS OF THE PLSS FAN WOULD REQUIRE UTILIZATION OF THE OPS (PURGE MODE) TO PROVIDE ADEQUATE VENTILATION.

3. SPECIFIC MISSION IMPACT (REF MR 19-1B, 19-21)

NOMINAL OR ALTERNATE EVA

LOSS OF A PLSS FAN DURING CHECKOUT WILL PROHIBIT USE OF THAT PLSS FOR EVA.

LOSS OF THE PLSS FAN DURING EVA WOULD REQUIRE ACTIVATION OF THE OPS (PURGE MODE) TO PROVIDE CO2 WASHOUT AND WOULD REQUIRE IMMEDIATE TERMINATION OF THE EVA.

E. PLSS POWER SUPPLY

1. DEFINITION (REF MR 19-2)

THE PLSS POWER SUPPLY IS CONSIDERED LOST IF---

(A) THE PLSS BATTERY VOLTAGE IS LESS THAN 16.0 VDC AND DECREASING

(B) THE PLSS BATTERY CURRENT DRAIN IS GREATER THAN 3.0 AMPS AND INCREASING (DOES NOT INCLUDE CHECKOUT).

A PLSS BATTERY VOLTAGE OF LESS THAN 16.0 VDC AND DECREASING INDICATES A DEPLETED BATTERY OR THE LOSS OF ONE OR MORE CELLS, EITHER OF WHICH WILL RESULT IN DEGRADED OPERATION OF THE PLSS ELECTRONICS. A PLSS BATTERY CURRENT DRAIN OF GREATER THAN 3.0 AMPS AND INCREASING IS A DIRECT INDICATION OF PLSS ELECTRONICS (PUMP, FAN, EVC) DEGRADATION OR FAILURE AND WILL RESULT IN EARLY DEPLETION AND LOSS OF THE PLSS BATTERY.

2. GENERAL MISSION IMPACT (REF MR 19-10)

LOSS OF THE PLSS BATTERY RENDERS THAT PLSS USELESS UNLESS THE BATTERY CAN BE REPLACED.

3. SPECIFIC MISSION IMPACT (REF MR 19-1B, 19-32)

NOMINAL OR ALTERNATE EVA

LOSS OF A PLSS BATTERY DURING CHECKOUT PROHIBITS USE OF THAT PLSS FOR EVA.

LOSS OF A PLSS BATTERY DURING EVA WOULD REQUIRE ACTIVATION OF THE OPS (HI PURGE FLOW) OR BSLSS AND OPS (LOW PURGE FLOW) FOR COOLING VENTILATION AND IMMEDIATE TERMINATION OF THE EVA.

F. EMU PRESSURE INTERGITY

1. DEFINITION (REF MR 19-2)

EMU PRESSURE INTEGRITY IS CONSIDERED LOST IF---

(A) THE EMU IS UNABLE TO MEET THE LESS THAN 0.3 PSI/MIN PRESSURE DECAY CRITERION DURING THE EMU PRESSURE INTEGRITY CHECK

(B) EMU REGULATED PRESSURE IS EQUAL TO OR LESS THAN 3.75 PSID AND DECREASING ON THE LUNAR SURFACE WHICH REPRESENTS AN O2 USAGE RATE GREATER THAN 0.7 LBS/HR.

THE INABILITY TO MAINTAIN A LEAK RATE OF GREATER THAN 0.3 PSI/MIN INDICATES AN EXCESSIVE LEAK THAT WOULD RESULT IN EARLY TERMINATION OF THE EVA. AN EMU REGULATED PRESSURE OF LESS THAN 3.75 PSID AND DECREASING REPRESENTS AN O2 USAGE RATE OF GREATER THAN 0.7 LB/HR.

2. GENERAL OPERATIONAL IMPACT

LOSS OF EMU PRESSURE INTERGITY PROHIBITS THE EVA ACTIVITIES IF THE LEAK IS IN THE PGA. IF THE FAILURE CAN BE ISOLATED TO THE PLSS THEN THAT PLSS CANNOT BE USED FOR EVA.

R	ITEM
	19-1 CONT

3. SPECIFIC OPERATIONAL IMPACT (REF MR 19-1B, 19-20)

(A) NOMINAL OR ALTERNATE EVA

LOSS OF A SINGLE EMU'S PRESSURE INTEGRITY DURING THE EMU PRESSURE INTEGRITY CHECKS WOULD RESULT IN ONE OF THE FOLLOWING---

(1) IF THE FAILURE CAN BE ISOLATED TO THE PLSS, ONE CREWMAN WOULD REMAIN ON THE LM ECS WHILE THE OTHER CREWMAN WOULD ATTEMPT THE ALTERNATE (ONE-MAN) EVA.

(2) IF THE VIOLATION OF PRESSURE INTEGRITY IS IN THE PGA, IT WOULD PRECLUDE THE POSSIBILITY OF ANY DEPRESSURIZED CABIN ACTIVITIES.

IF THE LOSS OCCURS DURING EITHER THE NOMINAL OR ALTERNATE EVA, IT WILL REQUIRE ACTIVATION OF THE OPS (MAKEUP) AND TERMINATION OF THE EVA.

(B) RENDEZVOUS/DOCKING

LOSS OF EMU PRESSURE INTEGRITY IN THE PLSS WOULD NOT CONSTRAIN A CEVA ASSUMING BOTH OPS UNITS ARE GOOD. LOSS OF EMU PRESSURE INTEGRITY IN THE PGA WOULD RESULT IN A SHORTER OPS LIFETIME AND WOULD PLACE SERIOUS TIME CONSTRAINTS ON THE ABILITY TO PERFORM A CEVT.

G. OPS O2 BOTTLE(S)

1. DEFINITION

THE OPS O2 BOTTLE(S) IS CONSIDERED LOST IF THE OPS O2 SOURCE PRESSURE IS LESS THAN 5380 PSIA AND THE OPS HAS NOT BEEN PREVIOUSLY USED OR THE OPS O2 SOURCE PRESSURE IS LESS THAN 4900 PSIA IF THE OPS HAS BEEN USED.

AN OPS O2 SOURCE PRESSURE OF LESS THAN 5380 PSIA WITHOUT PRIOR USE INDICATES A LEAK RATE IN EXCESS OF THAT WHICH WOULD BE CONSIDERED SAFE FOR CREWMAN OPERATION. AN OPS O2 SOURCE PRESSURE OF LESS THAN 4900 PSIA WOULD NOT PROVIDE SUFFICIENT O2 FLOW FOR THE 30 MINUTES OF PURGE OPERATION REQUIRED FOR A CEVA.

2. GENERAL OPERATIONAL IMPACT

LOSS OF AN OPS O2 BOTTLE RESULTS IN THE LOSS OF AN OXYGEN BACKUP SYSTEM AND CONSTRAINS EXTRAVEHICULAR ACTIVITIES TO A SINGLE EVA CREWMAN.

3. SPECIFIC OPERATIONAL IMPACT (REF MR 19-1A, 19-1B, 19-4, 19-14)

(A) UNDOCKING

LOSS OF AN OPS O2 BOTTLE PRIOR TO UNDOCKING PROHIBITS UNDOCKING UNTIL THE PRIMARY O2 SUPPLY PRESSURE OF ONE PLSS IS VERIFIED.

(B) NOMINAL OR ALTERNATE EVA

LOSS OF AN OPS O2 BOTTLE PRIOR TO THE EVA WOULD RESULT IN THE ALTERNATE (ONE-MAN) EVA. THE FAILED OPS COULD BE UTILIZED AS A BACKUP TO THE PLSS SHOULD THE CREWMAN IN THE LM BE REQUIRED TO AID THE EVA CREWMAN.

(C) LUNAR LIFTOFF

LOSS OF AN OPS O2 BOTTLE PRIOR TO LUNAR LIFTOFF WOULD REQUIRE OFF-LOADING OF THE FAILED OPS AND RETENTION OF AN OPERATIONAL PLSS IN ORDER TO FULFILL THE REQUIREMENT FOR TWO GOOD LIFE SUPPORT SYSTEMS FOR A POSSIBLE CEVT.

(D) RENDEZVOUS/DOCKING

LOSS OF ONE OR BOTH OPS O2 BOTTLES PRIOR TO RENDEZVOUS/DOCKING WOULD ELIMINATE THE CAPABILITY OF SAFELY PERFORMING A CEVT IN THE EVENT THE CREWMEN WERE UNABLE TO EFFECT A NORMAL TRANSFER.

R	ITEM
	19-1 CONT

H. OPS O2 PRESSURE REGULATION

1. DEFINITION

OPS O2 PRESSURE REGULATION IS CONSIDERED LOST IF A REGULATED PRESSURE BAND OF 3.7 +/- 0.3 PSID CANNOT BE MAINTAINED.

A SUSTAINED OPS REGULATED PRESSURE OF LESS THAN 3.4 PSID WOULD FAIL TO PROVIDE ADEQUATE O2 PARTIAL PRESSURE OR PURGE FLOW TO SAFELY SUSTAIN THE CREWMAN. A SUSTAINED OPS REGULATED PRESSURE OF GREATER THAN 4.0 PSID WOULD RESULT IN A HIGH OPS PURGE FLOW RATE AND A POSSIBLE RELIEVED SUIT CONDITION WHICH WOULD REDUCE THE LIFETIME OF THE OPS AS WELL AS EXPOSING THE CREWMAN TO A POTENTIALLY HAZARDOUS SITUATION.

2. GENERAL OPERATIONAL IMPACT

LOSS OF AN OPS PRESSURE REGULATOR RESULTS IN THE LOSS OF AN OXYGEN PRESSURE BACKUP AND CONSTRAINS EXTRAVEHICULAR ACTIVITIES TO A SINGLE EVA CREWMAN.

3. SPECIFIC OPERATIONAL IMPACT (REF MR 19-1A, 19-1B, 19-4, 19-14)

(A) UNDOCKING

LOSS OF AN OPS PRESSURE REGULATOR PRIOR TO UNDOCKING PROHIBITS UNDOCKING UNTIL THE PRIMARY O2 SUPPLY PRESSURE OF ONE PLSS IS VERIFIED.

(B) NOMINAL OR ALTERNATE EVA

LOSS OF AN OPS PRESSURE REGULATOR PRIOR TO THE EVA WOULD RESULT IN THE ALTERNATE (ONE-MAN) EVA. THE FAILED OPS CANNOT BE USED EITHER BY ITSELF OR AS A BACKUP TO THE PLSS SHOULD THE CREWMAN IN THE LM BE REQUIRED TO AID THE EVA CREWMAN.

(C) LUNAR LIFTOFF

LOSS OF AN OPS PRESSURE REGULATOR PRIOR TO LUNAR LIFTOFF WOULD REQUIRE OFF-LOADING OF THE FAILED OPS AND RETENTION OF AN OPERATIONAL PLSS IN ORDER TO FULFILL THE REQUIREMENT FOR TWO GOOD LIFE SUPPORT SYSTEMS FOR A POSSIBLE CEVA.

(D) RENDEZVOUS/DOCKING

LOSS OF ONE OR BOTH OPS PRESSURE REGULATORS PRIOR TO RENDEZVOUS/DOCKING WOULD ELIMINATE THE CAPABILITY OF SAFELY PERFORMING A CEVA IN THE EVENT THE CREWMAN WERE UNABLE TO EFFECT A NORMAL TRANSFER.

R	ITEM
	19-1 CONT

I. BSLSS/OPS TRAVERSE LIMITATIONS (REF MR 19-1B,19-2)

1. THE BSLSS PROVIDES LCG COOLING TO THE FAILED PLSS AND CAN REJECT APPROXIMATELY 1400 BTU'S/HR WHEREAS THE OPS CAN ONLY PROVIDE FOR HEAT REMOVAL IN THE RANGE OF 800-1000 BTU'S/HR. METABOLIC ACTIVITY ABOVE THIS RATE BECOMES HEAT STORED. ASSUMING A WORSE CASE FAILURE OF THE PLSS (I.E., POWER SUPPLY FAILURE) THE BACKUP SYSTEM MUST SUPPLY PROPER O2 VENTILATION, O2 PRESSURE, AND METABOLIC COOLING. THE BSLSS/OPS COMBINATION CAN PROVIDE THIS FUNCTION USING THE OPS LOW FLOW RATE (4.0 LB/HR). FOR THIS CASE, AS LONG AS SUFFICIENT WATER IS AVAILABLE TO SUPPORT BOTH CREWMEN'S RETURN TRAVERSE, THE OPS O2 AT THE 4 LB/HR RATE BECOMES THE CONSTRAINT. AN EXAMINATION OF WALKING RATES FOR CONTINGENCY TRANSLATION BY THE MROD HAS REVEALED THAT APPROXIMATELY 3.3 KM/HR IS THE MOST OPTIMUM RATE. ASSUMING THIS RATE AND USING THE 1.25 HR. OPS, DEDUCTING 13 MINUTES INGRESS TIME AND 5 MINUTES BSLSS ACTIVATION TIME YIELDS AN APPROXIMATE 3 KM MAXIMUM RADIUS. AS THE FEED WATER SUPPLY OF EACH CREWMAN'S PLSS IS DEPLETED, THERE IS A TRANSITION TIME WHEN THE FEED WATER BECOMES THE CONSTRAINT. THERE MUST BE SUFFICIENT WATER IN EITHER CREWMAN'S PLSS TO SUPPORT BOTH CREWMAN'S RETURN TRAVERSE. THE ACTUAL WATER REMAINING IS A FUNCTION OF THE METABOLIC RATE IN REAL TIME.

2. FOR LIMITED EVA EXCURSIONS, THE OPS BY ITSELF AT THE 8 LB/HR RATE, PROVIDES SUFFICIENT METABOLIC COOLING, PROPER OXYGEN VENTILATION AND PRESSURE REGULATION. SINCE THE OPS IS STRICTLY A GASEOUS COOLING SYSTEM, THE TIME CONSTRAINT BECOMES NOT STRICTLY A FUNCTION OF CONSUMABLES REMAINING, BUT OF CREWMAN MAXIMUM HEAT STORAGE. THE MROD HAS GIVEN A MAXIMUM CREW HEAT STORAGE CAPABILITY OF 300 BTU'S . BASED ON THIS HEAT STORAGE CONSTRAINT, A 3.3 KM/HC WALK RATE, AND DEDUCTING A 13 MINUTE INGRESS TIME, THE MAXIMUM DISTANCE FOR OPS USAGE (HI FLOW RATE) IS 1.0 KM. THIS IS BECAUSE OF THE RELATIONSHIP BETWEEN CREW HEAT STORAGE AND METABOLIC RATE.

R	ITEM	
	19-2	REF RATIONALE FOR MR 19-1
	19-3	REF RATIONALE FOR MR 19-1
	19-4	REF RATIONALE FOR MR 19-1
	19-5	CREW SAFETY
	19-6	NO RATIONALE REQUIRED
	19-7	REF RATIONAL FOR MR 19-1
	19-10	NO RATIONALE REQUIRED
	19-11	NO RATIONALE REQUIRED
	19-12	NO RATIONALE REQUIRED
	19-13	NO RATIONALE REQUIRED
	19-14	CREW SAFETY FOR A POSSIBLE CONTINGENCY TRANSFER
	19-15	REF RATIONALE FOR MR 19-1
	19-16	NO RATIONALE REQUIRED
	19-20	REF RATIONALE FOR MR 19-1
	19-21	REF RATIONALE FOR MR 19-1
	19-22	CONTAMINATION IN THE VENTILATION SYSTEM 1. DEFINITION CONTAMINATION IN THE VENTILATION SYSTEM IS DEFINED AS THE PRESENCE OF ANY FOREIGN SUBSTANCE IN SUFFICIENT QUANTITY TO PROVE UNCOMFORTABLE OR NOXIOUS TO THE CREWMAN. THE PRIMARY SOURCE OF CONTAMINATION IN THE VENTILATION SYSTEM IS LIOH AND/OR ITS DERIVATIVES FROM THE CONTAMINANT CONTROL ASSEMBLY LIOH/CHARCOAL CARTRIDGE RESULTING FROM CHANNELING OR BREAKTHROUGH. 2. GENERAL OPERATIONAL IMPACT CONTAMINATION IN THE VENTILATION SYSTEM WOULD PRECLUDE USE OF THE PLSS AS A LIFE SUPPORT SYSTEM AND WOULD RESULT IN THE USE OF AN OPS IN THE LOW PURGE MODE. 3. SPECIFIC OPERATIONAL IMPACT (REF MR 19-13, 19-15 NOMINAL OR ALTERNATE EVA CONTAMINATION IN THE VENTILATION SYSTEM DURING EVA WOULD REQUIRE ACTIVATION OF THE OPS IN A PURGE MODE TO CLEAR THE HELMET AREA OF THE CONTAMINATION AND TO PROVIDE BREATHABLE OXYGEN. TERMINATION OF THE EVA WILL RE REQUIRED IF THE OPS IS ACTIVATED.
	19-30	REF RATIONALE FOR MR 19-1
	19-31	REF RATIONALE FOR MR 19-1

R	ITEM	
	19-32	REF RATIONALE FOR MR 19-1
	19-33	REF RATIONALE FOR MR 19-1

R	ITEM	

LM INSTRUMENTATION

20-45 TO BE SUPPLIED

20-46

A. ALL COMMANDS CAN BE UPLINKED VIA VOICE

B. THE MISSION WILL BE ALLOWED TO CONTINUE WITH LOSS OF THE CAUTION AND WARNING SYSTEM DUE TO THE FACT THAT LOSS OF THAT SYSTEM WILL NOT REMOVE CREW OR GROUND CAPABILITY OF MONITORING SYSTEMS PARAMETERS.

C. NO MISSION IMPACT.

D. REF RATIONALE FOR MR 19-1.

E. RESULTS IN LOSS OF TV ONLY-WHICH IS ONLY DESIRABLE.

F. RF DOPPLER IS SUFFICIENT

G. REMAINING CAPABILITIES (OPTICS AND RR) ARE ADEQUATE.

20-50 LM USB/TM MANAGEMENT

A. FOR NORMAL LM POWERED UP PHASES, THE LM STEERABLE ANTENNA WITH THE POWER AMPLIFIER WILL BE USED. DURING LUNAR STAY, IF THE ERECTABLE ANTENNA IS USED, THE POWER AMPLIFIER MAY BE TURNED OFF IF HBR TM AND VOICE CIRCUIT MARGINS ARE ADEQUATE.

RATIONALE

IN ORDER FOR BOTH HBR TM AND VOICE TO BE RECEIVED FROM LUNAR DISTANCE, THE STEERABLE ANTENNA AND POWER AMPLIFIER MUST BE USED. DURING LUNAR STAY OPERATIONS, CIRCUIT MARGINS MAY ALLOW TURNING OFF OF THE POWER AMPLIFIER WHEN THE ERECTABLE ANTENNA IS IN USE. FAVORABLE CIRCUIT MARGINS FROM LARGE GROUND ANTENNAS MAY ALSO ALLOW HBR TM FROM THE STEERABLE ANTENNA WITH NO POWER AMPLIFIER.

B. DURING PERIODS OF LM OUT OF STATION CONTACT (LUNAR FAR SIDE), THE TM BIT RATE WILL BE SWITCHED FROM HBR TO LBR AND TRANSMITTED TO THE CSM OVER VHF B EXCEPT DURING VHF RANGING (WHICH REQUIRES VHF A TRANSMITTER) AND PERIODS OF CRITICAL VOICE COMMUNICATIONS.

RATIONALE

BY SWITCHING THE BIT RATE TO LOW WHILE BEHIND THE MOON, THE CSM CAN RECORD LM DATA AND PLAY IT BACK WHEN IN LINE OF SIGHT OF EARTH. THIS ENABLES GROUND CONTROLLERS TO MONITOR LM PERFORMANCE WHEN THE LM IS NOT IN SIGHT OF THE MSFN. OTHER MISSION PERIODS REQUIRE THAT THE VHF SYSTEM BE USED FOR VHF RANGING OR THAT THE VHF B DATA XMTR BE USED AS A VOICE BACKUP TO VHF A. DUE TO THE EQUIPMENT CONFIGURATION REQUIRED FOR THESE FUNCTIONS, LOW BIT RATE DATA TRANSFER IS PRECLUDED DURING THESE OPERATIONS.

C. FOR ALL LUNAR STAY OPERATIONS IN WHICH THE PGNS IS POWERED, HBR TM WILL BE USED.

RATIONALE

WHEN THE PGNS IS POWERED IT IS DESIRABLE TO REMAIN IN HBR SO THAT ITS STATUS MAY BE CONTINUOUSLY MONITORED. THE LBR TELEMETRY FORMAT DOES NOT CONTAIN THE LGC DOWNLINK AND MANY OTHER PGNS PARAMETERS THAT ARE ON THE HBR FORMAT.

R	ITEM

20-55 LM TELEMETRY

A. DEFINITION OF LOSS

LM TELEMETRY IS CONSIDERED TO BE LOST IN THE EVENT THAT USEABLE TELEMETRY CANNOT BE RECEIVED AND RECORDED BY THE REMOTED SITE AND TRANSMITTED TO HOUSTON FOR REAL-TIME FLIGHT CONTROLLER EVALUATION AND THIS TM CAPABILITY CANNOT BE RESTORED WITHIN A REASONABLE PERIOD OF TIME.

B. OPERATIONAL IMPACT OF LOSS

THE LOSS OF HBR TM PRECLUDES THE MONITORING, BY GROUND CONTROLLERS, OF THE PERFORMANCE OF THE LGC AND AEA. A NUMBER OF GUIDANCE AND CONTROL PARAMETERS ARE TRANSMITTED ONLY ON HBR TM AND OTHERS ARE TRANSMITTED AT A HIGH SAMPLE RATE ONLY ON HBR. THE LOSS OF ONLY LBR TM PRECLUDES THE LBR DATA TRANSFER FROM THE LM TO THE CSM AND WOULD THUS PRECLUDE THE EVALUATION OF BEHIND THE MOON ACTIVITY AFFORDED BY DATA PLAYBACK. THE LOSS OF ALL TELEMETRY RESULTS IN INABILITY OF THE GROUND CONTROLLER TO MONITOR ONBOARD SYSTEM PERFORMANCE.

C. SPECIFIC OPERATIONAL IMPACT (REF MR 20-55)

1. NOMINAL MISSION

(A) UNDOCKING, DESCENT ORBIT, POWERED DESCENT - IN ORDER TO ADEQUATELY MONITOR THE POWERED FLIGHT PHASES OF THE MISSION AND TO INSURE CREW SAFETY AND SYSTEM COGNIZANCE DURING POWERED DESCENT, HBR TM IS NECESSARY TO LO GATE. SPECIFICALLY, SUFFICIENT HBR DATA TO DETERMINE GO/NO-GO STATUS IS MANDATORY DURING POWERED DESCENT TO DETECT SLOW DRIFTING OF PGNS OR AGS IN REAL TIME (ONLY THE GROUND CAN DO THIS) AND FOR POSTFLIGHT ANALYSIS. AFTER LO GATE, ABORTING DUE TO LOSS OF HBR TM WOULD BE MORE HAZARDOUS THAN CONTINUING TO LAND.

(B) LUNAR STAY - HBR OR LBR TM WILL BE ADEQUATE FOR SYSTEMS EVALUATION WHILE ON THE LUNAR SURFACE. HBR IS HIGHLY DESIRABLE FOR ASCENT AND RENDEZVOUS BUT THE LM IS COMMITTED TO THESE PHASES REGARDLESS OF TM. SHOULD ALL TM BE LOST, LUNAR STAY WILL BE ABBREVIATED DUE TO DEGRADED VEHICLE MONITORING CAPABILITIES. FOR A LOSS OF ALL TM, ONLY A ONE-MAN EVA MAY BE PERFORMED.

(C) RENDEZVOUS AND DOCKING - THE LOSS OF TM DOES NOT AFFECT THE ABILITY OF THE LM TO RENDEZVOUS AND DOCK, BUT ONLY PROHIBITS GROUND CONTROLLER AID IN THE MONITORING OF SYSTEM PERFORMANCE. IN THIS EVENT, A LM-ACTIVE RENDEZVOUS WILL BE PERFORMED SINCE THIS IS THE NOMINAL RENDEZVOUS PLAN.

2. ALTERNATE MISSIONS

UNDOCKING AND STATION KEEPING WILL BE PERFORMED IF ALL TM IS LOST SINCE THE LM WOULD NOT BE COMMITTED TO LONG PERIODS INDEPENDENT OF THE CSM. EITHER HBR OR LBR DATA IS ADEQUATE FOR A RENDEZVOUS ALTERNATE MISSION.

20-56 CRITICAL INSTRUMENTATION

A. DEFINITION OF LOSS

CRITICAL INSTRUMENTATION IS CONSIDERED LOST WHEN INFORMATION PROVIDED BY TELEMETRY AND/OR ONBOARD DISPLAYS IS NOT ADEQUATE TO MONITOR THE PERFORMANCE OF ANY CRITICAL ONBOARD FUNCTION.

B. GENERAL OPERATIONAL IMPACT

LOSS OF CRITICAL INSTRUMENTATION COULD JEOPARDIZE CREW SAFETY IF A CRITICAL ONBOARD FUNCTION COULD NOT BE MONITORED EITHER BY THE CREW OR THE GROUND.

R	ITEM
	20-56 CONT

C. MISSION RULE RATIONALE (REF MR 20-56)

1. NOMINAL MISSION

(A) UNDOCKING, DESCENT ORBIT, LUNAR STAY - THE MONITORING OF ALL CRITICAL ONBOARD FUNCTIONS IS NECESSARY TO INITIATE ANY CRITICAL MISSION PHASE. LOSS OF THIS CAPABILITY COULD AFFECT CREW SAFETY.

(B) POWERED DESCENT - CREW SAFETY IS JEOPARDIZED IF INSTRUMENTATION CRITICAL TO PERFORMING A SAFE DESCENT AND LANDING OR TO MONITORING SYSTEMS ESSENTIAL FOR A SAFE ASCENT AND RENDEZVOUS IS LOST.

(C) RENDEZVOUS - CSM RESCUE WILL BE REQUIRED ONLY WHEN LM INSTRUMENTATION ESSENTIAL TO PERFORMING A LM-ACTIVE RENDEZVOUS IS LOST.

2. ALTERNATE MISSION

THE LOSS OF CRITICAL INSTRUMENTATION PRECLUDES THE CONSIDERATION OF ANY ALTERNATE MISSION.

R	ITEM

LM SEQUENTIAL AND PYROTECHNIC

21-1 TO INITIATE MANNED LM MISSION PHASES, THE PYROTECHNIC SYSTEM MUST PROVIDE THE FOLLOWING MINIMUM CAPABILITIES (REF LM TELMU GO CRITERIA IN SECTION 3 OF MR)---

PYROTECHNIC SYSTEM

1. DEFINITION (REF MR 21-2)

A PYRO SYSTEM IS CONSIDERED LOST IF A PYRO BATTERY OPEN CIRCUIT VOLTAGE LESS THAN 35 VDC OR IF THE SYSTEM IS INCAPABLE OF BEING ARMED. A PYRO BATTERY OPEN CIRCUIT VOLTAGE IS NOMINALLY 37.2 VDC AND THERE IS NO REASON FOR THE VOLTAGE TO EVER FALL BELOW 35 VDC OPEN CIRCUIT. IF IT SHOULD IT WOULD INDICATE A DEGRADING BATTERY OR LOSS OF CELLS (1.86 VOLTS PER CELL). IF THE MASTER ARM RELAY, K1, CANNOT BE CLOSED THEN THE PYRO BATTERY CANNOT BE CONNECTED TO THE PYRO BUS AND NO PYRO FUNCTION CAN BE PERFORMED WITH THIS SYSTEM.

2. GENERAL OPERATIONAL IMPACT (REF MR 21-12)

LOSS OF ONE PYRO SYSTEM MEANS LOSS OF ALL REDUNDANCY FOR PYROTECHNIC FUNCTIONS. THE MOST CRITICAL IMPACT IS ON STAGING. IF STAGING IS PERFORMED WITH LOSS OF ONE SYSTEM THERE ARE SINGLE POINT FAILURES WHICH COULD RESULT IN THE INABILITY TO STAGE OR IN INCOMPLETE STAGING.

3. SPECIFIC OPERATIONAL IMPACT (REF MR 21-20)

(A) NOMINAL MISSION

(1) UNDOCKING THROUGH PDI +5+30 - THE LM MUST HAVE REDUNDANT PYROTECHNIC SYSTEMS TO COMMIT TO MISSION PHASES IN WHICH STAGING IS MANDATORY. IF ONE SYSTEM IS LOST PRIOR TO PDI+5+30 (AFTER THAT POINT, THE LM MUST STAGE TO RETURN), THE NOMINAL LM MISSION WILL BE ABORTED. THE LM WILL NOT BE STAGED WITH THE REMAINING PYRO SYSTEM UNLESS CREW SAFETY DICTATES (SEE MANAGEMENT RULE 21-12).

(2) PDI+5+30 TO TOUCHDOWN - THE LM IS NOW COMMITTED TO STAGING FOR EITHER AN ABORT OR LUNAR SURFACE LAUNCH. IF A PYRO SYSTEM WERE LOST DURING THIS PERIOD, THE LM WOULD HAVE TO STAGE WITH ONLY ONE PYRO SYSTEM SOONER (ABORT) OR LATER (LUNAR SURFACE LAUNCH AFTER A ONE-REV STAY). THEREFORE, THERE IS NO SIGNIFICANT ADVANTAGE TO ABORTING.

(3) LUNAR STAY - IF ONE PYRO SYSTEM IS LOST ON THE LUNAR SURFACE, THE LM MUST LIFT OFF AT THE NEXT BEST OPPORTUNITY BECAUSE SUBSEQUENT FAILURE OF THE OTHER SYSTEM WOULD RESULT IN THE INABILITY TO LIFT OFF.

(B) ALTERNATE MISSIONS

THE LM WILL NOT UNDOCK OR IF UNDOCKED PROCEED WITH EXTENDED SEPARATED MANEUVERS WITH LOSS OF BOTH PYRO SYSTEMS BECAUSE THE CAPABILITY TO STAGE (REQUIRED FOR DPS PROPELLANT LEAKS, ETC.) IS LOST. LOSS OF ONE SYSTEM PRECLUDES A RENDEZVOUS MISSION BECAUSE THE LM MUST HAVE THE REDUNDANT CAPABILITY TO STAGE BEFORE COMMITTING TO A LM-ACTIVE RENDEZVOUS.

R	ITEM	
	21-2	REF RATIONALE FOR MR 21-1
	21-3	REF RATIONALE FOR MR 21-13 AND 21-22
	21-4	NO RATIONALE REQUIRED
	21-5	NO RATIONALE REQUIRED
	21-6	THE CONDITIONS REQUIRING A NEXT BEST OPPORTUNITY LIFT-OFF(LOSS OF A PYRO SYSTEM OR UNABLE TO DISARM A SYSTEM)ARE NOT OF SUFFICIENT TIME CRITICALITY TO REQUIRE A T1 OR T2 LIFT OFF.

R	ITEM	
	21-10	APS PRESSURIZATION APS WILL NORMALLY BE PRESSURIZED IMMEDIATELY PRIOR TO STAGING. APS WILL NOT NORMALLY BE PRESSURIZED MORE THAN 24 HOURS PRIOR TO THE LAST APS BURN-- HOWEVER, IN A CONTINGENCY, THE APS MAY BE PRESSURIZED UP TO 3-1/2 DAYS PRIOR TO THE LAST APS BURN. BY WAITING UNTIL IMMEDIATELY PRIOR TO STAGING TO PRESSURIZE APS, THE OPTION TO PRESSURIZE ONE OR BOTH TANKS EXISTS IF AN APS HELIUM LEAK HAS DEVELOPED. THE TIME CONSTRAINT OF 24 HOURS AND 3-1/2 DAYS IS DUE TO THE AMOUNT OF TIME THE PROPELLANTS CAN BE IN CONTACT WITH THE QUAD CHECK VALVES AFTER PRESSURIZATION WITHOUT DAMAGE TO THEM.
	21-11	LANDING GEAR DEPLOY IF UNABLE TO DEPLOY ONE OR MORE LANDING GEAR, A LANDING WILL NOT BE ATTEMPTED. DESCENT ENGINE BURNS WILL BE CONTINUED SINCE CONTROL PROBLEMS ARE NOT EXPECTED TO EXIST AND DAMAGE TO THE LANDING GEAR FROM THE BURN WILL NOT AFFECT NON-LANDING MISSIONS. SELF EXPLANATORY.
	21-12	ONE PYRO SYSTEM STAGING UNDOCKED STAGING WITH ONE PYRO SYSTEM WILL BE PERFORMED ONLY IF ABSOLUTELY NECESSARY TO MAINTAIN CREW SAFETY. WITH ONLY ONE PYRO SYSTEM THERE ARE MANY SINGLE POINT FAILURES WHICH COULD CAUSE INCOMPLETE STAGING.
	21-13	RELAY K1-K6 FAILURE FOR A K1 THROUGH K6 FAILURE, THE GOOD SYSTEM WILL BE DISABLED AND A PYRO FUNCTION, OTHER THAN STAGING, ATTEMPTED TO DETERMINE IF K1 (PYRO SYSTEM ARM RELAY) HAS FAILED CLOSED. AN EXTRA SET OF CONTACTS ON EACH RELAY K1 THROUGH K6 IN BOTH PYRO SYSTEMS ARE WIRED IN SERIES/PARALLEL TO MAKE UP A DAISY CHAIN WHICH IS MONITORED VIA TM AND ONBOARD. AN INADVERTENT CLOSURE OF ONE OF THESE RELAYS CAN BE DETECTED. HOWEVER, THE PARTICULAR FAILED RELAY CANNOT BE ISOLATED EXCEPT IN THE CASE OF THE MASTER ARM RELAY. IF A RELAY CLOSURE IS DETECTED, A PYRO FUNCTION WILL BE ATTEMPTED WITHOUT ARMING EITHER SYSTEM. FAILURE TO PERFORM THE PYRO FUNCTION WILL INDICATE THAT THE FAILED RELAY WAS NOT K1. THE RELAYS OF THE CHAIN MAKE UP THE STAGING SYSTEM AS FOLLOWS--- K1 - MASTER ARM K2 - STAGE RELAY K3 AND K4 - INTERSTAGE UMBILICAL GUILLOTINE K5 AND K5A - INTERSTAGE BOLTS (SYSTEM A) AND NUTS (SYSTEM B) K6 - ELECTRICAL CIRCUIT INTERRUPTERS AFTER ISOLATING K1 AS NOT BEING THE FAILED RELAY, THIS PYRO SYSTEM MUST BE DISABLED BY PULLING THE APPLICABLE LOGIC POWER BREAKER BECAUSE THE FUNCTION CONTROLLED BY THE FAILED RELAY WILL BE PERFORMED SHOULD THIS SYSTEM BECOME ARMED. IN THE CASE WHERE K2 MAY HAVE FAILED, THE SYSTEM WOULD BE IN A CONFIRMATION WHERE THE SUBSEQUENT FAILURE OF K1 WOULD CAUSE AN INADVERTENT STAGING WHICH WOULD NORMALY BE CAUSE FOR ABORT. HOWEVER, A K2 FAILURE CAN NOT BE CONFIRMED. IT CAN ONLY BE DETERMINED THAT ONE OF THE RELAYS K2 THRU K6 HAS FAILED. ON THE BASIS THAT A K2 FAILURE CAN NOT BE CONFIRMED THE MISSION SHOULD BE CONTINUED.

R	ITEM	
	21-14	ARMED PYRO SYSTEM AN ARMED PYRO SYSTEM(S) THAT CANNOT BE DEARMED IS CONSIDERED UNSAFE FOR THE VIBRATION/SHOCK ENVIRONMENT ASSOCIATED WITH LUNAR TOUCHDOWN. SUBSEQUENT CLOSURE OF ANOTHER PYRO RELAY WOULD RESULT IN THAT PYRO FUNCTION BEING PERFORMED. THE WORST CASE WOULD BE INADVERTENT STAGING WHICH COULD BE CATASTROPHIC DURING THE LANDING PHASE.
	21-20	REF RATIONALE FOR MR 21-1 ITEM 3
	21-21	UNABLE TO DISARM 1. DEFINITION (A) PYRO SYSTEM CANNOT BE DISARMED IF THE PYRO BATTERY CANNOT BE DISCONNECTED FROM THE PYRO BUS. THIS WILL BE DETECTED BY ATTEMPTING A PYRO FUNCTION OTHER THAN STAGING WITH THE SUSPECT SYSTEM(S) AFTER ALL ATTEMPTS HAVE BEEN MADE TO DISARM THE FAILED SYSTEM. IF THE PYRO FUNCTION OCCURS, THE SYSTEM(S) IS CONSIDERED ARMED. 2. GENERAL OPERATIONAL IMPACT WITH AN ARMED PYRO SYSTEM(S), SUBSEQUENT CLOSURE OF ANY OTHER PYRO RELAY WILL RESULT IN EXECUTION OF THAT PYRO FUNCTION. MOST CRITICAL WOULD BE A CLOSURE OF ONE OF THE STAGING RELAYS CAUSING INADVERTENT STAGING (PARTIAL OR COMPLETE). 3. SPECIFIC OPERATIONAL IMPACT (REF MR 21-14, 21-5) (A) NOMINAL MISSION (1) UNDOCKING THROUGH TOUCHDOWN - THE NOMINAL MISSION WILL BE ABORTED IF UNABLE TO DISARM EITHER OR BOTH PYRO SYSTEMS. OF MOST CONCERN IS INADVERTENT STAGING WHICH WOULD BE CATASTROPHIC DURING POWERED DESCENT. ALSO, THE SHOCK AND VIBRATION ASSOCIATED WITH LANDING COULD CAUSE A PYRO RELAY TO SET AND INITIATE A PYRO FUNCTION. (2) LUNAR STAY - EVA WILL NOT BE INITIATED WITH EITHER OR BOTH PYRO SYSTEMS ARMED. INADVERTENT STAGING WOULD ENDANGER ANY EVA CREWMAN IN THE NEAR VICINITY OF THE LM DUE TO SCHRAPNEL FROM THE PYROTECHNIC DEVICES. WITH THE CREW INSIDE INADVERTENT STAGING IS NOT SERIOUS SINCE THE LM WOULD REMAIN IN PLACE ON THE DESCENT STAGE EVEN THOUGH ALL CONNECTIONS BETWEEN THE STAGES MAY BE SEVERED. HOWEVER, A NEXT BEST OPPORTUNITY LIFTOFF WILL BE REQUIRED TO MINIMIZE THIS POSSIBILITY. (B) ALTERNATE MISSIONS DOCKED, UNDOCKED, DESCENT ORBIT - THE MISSION WILL BE CONTINUED WITH AN ARMED PYRO SYSTEM OR SYSTEMS ASSUMING THE CREW CAN RECOVER FROM INADVERTENT STAGING. STAGING WILL BE PERFORMED NORMALLY IN ORBIT.

R	ITEM

21-22 K7-K15 CLOSED

1. DEFINITION (REF MR 21-3B)

A PYRO SYSTEM IS CONSIDERED UNUSABLE AND WILL BE DISABLED UNTIL AFTER DPS CRYOGENIC PRESSURIZATION AND THE DES FUEL AND OX VENTS ARE CLOSED FOR AN INADVERTENT CLOSURE OF A K7 THROUGH K15 RELAY.

2. GENERAL OPERATIONAL IMPACT

AN INADVERTENT CLOSURE OF ANY RELAY, K7 THROUGH K15, IN EITHER PYRO SYSTEM CAN BE DETECTED VIA TM BUT THE PARTICULAR RELAY FAILED CANNOT BE ISOLATED. THESE RELAYS PERFORM THE FOLLOWING FUNCTIONS---

K7 - RCS PRESS

K8 & K8A - LAND GEAR DEPLOY

K9 - DPS CRYO HE PRESS

K10 & K11 - ASC HE PRESS

K12 & K12A - ASC FUEL AND OX COMP VALVES

K13 - DPS FU & OX VENT VALVES

K14 - DPS AMBIENT HE VALVES

K15 - DPS FU & OX COMP VALVES

PREMATURE OPERATION OF ANY OF THE RELAYS IS NOT SERIOUS EXCEPT FOR DPS CRYOGENIC HE PRESS (K9) AND DPS FU AND OX VENT VALVES (K13). IF THE DPS CRYOGENIC HELIUM VALVE IS OPENED PRIOR TO FIRST IGNITION OF THE DPS, THE FUEL/HELIUM HEAT EXCHANGER WILL FREEZE, CUTTING OFF FUEL FLOW TO THE ENGINE. IF THE DPS FU AND OX VENT VALVES WERE TO OPEN PRIOR TO TOUCHDOWN, THE FU AND OX WOULD VENT OVERBOARD SINCE THE SOLENOID VENT VALVES ARE NORMALLY TO BE LEFT OPEN.

3. SPECIFIC OPERATIONAL IMPACT

(A) NOMINAL MISSION

INDICATION OF A K7 THROUGH K15 RELAY CLOSURE IN EITHER PYRO SYSTEM REQUIRES OPENING THE CORRESPONDING LOGIC POWER CIRCUIT BREAKER TO DISABLE THAT PYRO SYSTEM FOR ALL SUBSEQUENT PYRO FUNCTIONS UNTIL AFTER DPS CRYOGENIC HELIUM PRESSURIZATION AND THE DES FU & OX SOLENOID VENT VALVES ARE CLOSED. THIS WILL PREVENT INADVERTENT FIRING (OPENING) OF THE CRYOGENIC HELIUM VALVE OR THE DES FU & OX SQUIB VENT VALVES. IF BOTH PYRO SYSTEMS SHOW INDICATIONS OF A K7 THROUGH K15 CLOSURE, THE DESCENT HE REG VALVES 1 AND 2 AND THE DES FU & OX SOLENOID VENT VALVES SHOULD BE CLOSED BEFORE ARMING THE PYRO SYSTEM FOR ANY PYRO FUNCTIONS PRIOR TO PDI.

(B) ALTERNATE MISSIONS

SAME RATIONALE AS FOR NOMINAL MISSIONS.

21-23 UNABLE TO STAGE (REF MR 21-4)

1. DEFINITION

THE LM IS CONSIDERED UNABLE TO STAGE IF EITHER STAGING CANNOT BE INITIATED DUE TO LOSS OF BOTH PYRO SYSTEMS OR DOUBLE FAILURES WITHIN THE PYRO SYSTEMS RESULT IN INCOMPLETE SEPARATION OF THE ASCENT AND DESCENT STAGES.

2. GENERAL OPERATIONAL IMPACT

FAILURE TO STAGE ON THE LUNAR SURFACE IS CATASTROPHIC. FAILURE TO STAGE IN ORBIT REQUIRES THE LM TO ATTEMPT TO COMPLETE A RENDEZVOUS UNSTAGED IF THE DESCENT STAGE IS RIGIDLY ATTACHED. IF THE DESCENT STAGE IS NOT RIGIDLY ATTACHED, THE LM MUST BE RESCUED.

3. SPECIFIC OPERATIONAL IMPACT

(A) NOMINAL MISSION

FOR THE NOMINAL MISSION, KNOWN INABILITY TO STAGE, PRIOR TO PDI+5, WOULD BE CAUSE TO ABORT THE NOMINAL MISSION. AFTER PDI+5, THIS SITUATION IS CATASTROPHIC.

R	ITEM
	21-23 CONT

(B) ALTERNATE MISSION

RENDEZVOUS - IF STAGING CANNOT BE INITIATED OR IF IT IS AND DOES NOT PHYSICALLY SEPARATE, THE MISSION WILL BE CONTINUED USING THE RCS AND DPS IF AVAILABLE TO COMPLETE THE RENDEZVOUS AS LONG AS THE STAGES ARE STILL REGIDLY ATTACHED. CSM RESCUE WILL BE REQUIRED FOR THE TERMINAL PHASE OR IF RCS REDLINES ARE VIOLATED. SHOULD PARTIAL STAGING OCCUR SUCH THAT THE STAGES ARE NOT RIGIDLY ATTACHED, MANEUVER CAPABILITY OF THE LM IS LOST. THE LM WILL GO TO DRIFTING FLIGHT AND CALL FOR A CSM RESCUE.

R	ITEM

LM ELECTRICAL POWER

22-1 TO INITIATE MANNED LM MISSION PHASES, THE ELECTRICAL POWER SYSTEM MUST PROVIDE THE FOLLOWING MINIMUM CAPABILITIES (REF LM TELMU GO CRITERIA IN SECTION 3 OF FMR DOCUMENT)---

A. CDR/LMP BUS

1. DEFINITION (REF MR 22-2)

THE CDR OR LMP BUS IS CONSIDERED LOST IF THE BUS VOLTAGE CANNOT BE MAINTAINED GREATER THAN 26.5 VDC OR IF THE BUS CURRENT IS GREATER THAN 90 AMPS. A BUS VOLTAGE LESS THAN 26.5 VDC WILL PROVIDE OUT OF SPEC VOLTAGES FOR SEVERAL CRITICAL LM EQUIPMENTS (E.G. COMM, ECS, PGNS, SCS, ETC.). BUS CURRENTS GREATER THAN 90 AMPS INDICATE A SHORT ON THE BUS AND WOULD EXCEED THE SPEC WIRE RATING OF THE FEEDER LINES.

2. GENERAL OPERATIONAL IMPACT

LOSS OF EITHER BUS RESULTS IN LOSS OF LM EQUIPMENT REDUNDANCY AND SERIOUSLY DEGRADED ELECTRICAL POWER SUBSYSTEM. SUBSEQUENT FAILURE OF THE OTHER BUS WOULD RESULT IN THE INABILITY TO POWER ANY SPACECRAFT EQUIPMENTS.

3. SPECIFIC OPERATIONAL IMPACT (REF MR 22-20)

(A) NOMINAL MISSION

(1) UNDOCKING THROUGH LUNAR STAY - LOSS OF A BUS MEANS LOSS OF CAPABILITY TO LAND AND LOSS OF REDUNDANCY OF CRITICAL SYSTEMS. DURING POWERED DESCENT, LOSS OF THE CDR OR LMP BUS WILL CAUSE THE DESCENT ENGINE TO THROTTLE TO 100 PERCENT WHICH WILL PREVENT ANY ATTEMPT TO LAND AND CAUSE AN ABORT TO BE INITIATED. IMMEDIATE RETURN TO THE CSM IS NECESSARY TO REDUCE THE TIME IN WHICH A FAILURE OF A REMAINING CRITICAL SYSTEM OR THE REMAINING BUS CAN OCCUR.

(2) LM-ACTIVE RENDEZVOUS - ONCE COMMITED TO RENDEZVOUS, THE LM SHOULD REMAIN THE ACTIVE VEHICLE BECAUSE IT CAN STILL COMPUTE AND EXECUTE ALL RENDEZVOUS MANEUVERS AND IT IS BEST TO REMAIN WITH THE NOMINAL RENDEZVOUS PLAN.

(B) ALTERNATE MISSION(S)

NO UNDOCKED MISSION IS ACCEPTABLE IN VIEW OF THE RISK INVOLVED.

R	ITEM
	22-1 CONT

B. DESCENT FEEDER(S)

FIGURE 1- EPS FEEDER CONFIGURATION

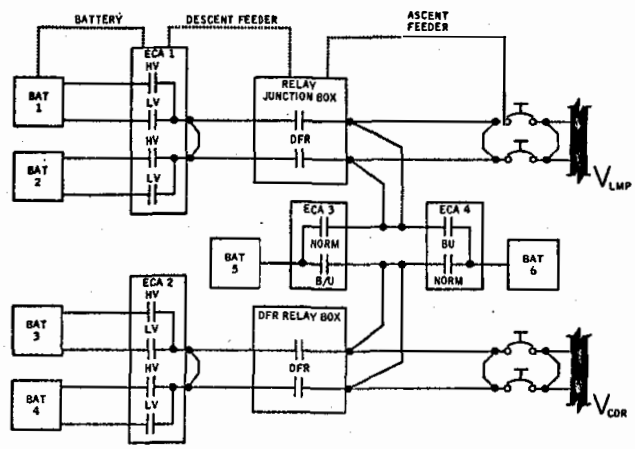

1. DEFINITION (REF MR 22-2 AND FIG 1)

LOSS OF A DESCENT FEEDER IS DEFINED AS THE INABILITY TO USE AS A POWER PATH THE ELECTRICAL CONNECTIONS FROM THE OUTPUT TERMINAL OF THE DESCENT ECA TO THE DEADFACE RELAY. FROM THE DEADFACE RELAY TO THE BUS, THE DESCENT AND ASCENT BATTERIES USE THE SAME MAIN FEED LINES AND THIS PORTION OF THE MAIN FEED LINES IS CONSIDERED PART OF THE ASCENT FEEDER ONLY.

2. GENERAL OPERATIONAL IMPACT

AN OPEN DESCENT FEEDER IS NOT A SERIOUS MALFUNCTION AS THE SUBSEQUENT FAILURE OF THE OTHER DESCENT OR ONE OF THE ASCENT FEEDERS WILL NOT RESULT IN INABILITY TO POWER THE SPACECRAFT. THERE ARE TWO SINGLE POINT FAILURES THAT CAN CAUSE AN OPEN FEEDER. (A) THE INADVERTENT OPENING OF ONE OF THE TWO DEADFACE RELAYS AND (B) AN OPEN ECA ONBOARD CONTROL CAPABILITY EXISTS ONLY TO OPEN OR CLOSE BOTH OF THE DEADFACE RELAYS SIMULTANEOUSLY. AN OPEN DESCENT FEEDER RESULTS IN THE LOSS OF CONSUMABLE CAPABILITY OF TWO DESCENT BATTERIES. CONSUMABLE CRITERIA THEN DICTATE THE EFFECT ON THE MISSION.

A SHORTED DESCENT FEEDER CAN RESULT FROM A SINGLE POINT FAILURE (SHORT) ANYWHERE ALONG THE POWER FLOW PATH. ISOLATION OF THE SHORT REQUIRES DEADFACING AND THUS THE LOSS OF CONSUMABLE CAPACITY OF ALL DESCENT BATTERIES. TO MAINTAIN A POWERED UP SPACECRAFT BOTH ASCENT BATTERIES WILL BE PLACED ON THEIR NORMAL FEEDPATHS. IT SHOULD BE NOTED THAT SPECIFIC PROCEDURES MUST BE FOLLOWED TO DETERMINE WHERE ALONG THE BATTERY-TO-BUS POWER FLOW PATH THE SHORT EXISTS. IF INSUFFICIENT TIME IS AVAILABLE TO TROUBLESHOOT, A SHORT MUST BE ASSUMED TO BE ON THE BUS (WORST CASE) AND THE MISSION ABORTED.

3. SPECIFIC OPERATIONAL IMPACT (REF MR 22-21)

(A) NOMINAL MISSION (ALL PHASES)

THE NOMINAL MISSION WILL BE CONTINUED IF CONSUMABLE REDLINES ARE NOT VIOLATED AND SUFFICIENT CONSUMABLES REDUNDANCY REMAINS. FOR AN OPEN, CONSUMABLE CRITERIA NOMINALLY PERMIT CONTINUATION OF THE LUNAR LANDING MISSION WITH AN ABBREVIATED LUNAR STAY. FOR A SHORT, ALL DESCENT ELECTRICAL CONSUMABLES ARE LOST (SEE 22-1.B.2 ABOVE AND THERE ARE INSUFFICIENT ASCENT CONSUMABLES TO COMPLETE THE NOMINAL MISSION.

(B) ALTERNATE MISSIONS

ANY ALTERNATE MISSION THAT DOES NOT VIOLATE CONSUMABLES CRITERIA IS ACCEPTABLE.

R	ITEM
	22-1 CONT

C. ASCENT FEEDER(S)

1. DEFINITION (REF MR 22-2 AND FIG 1)

LOSS OF AN ASCENT FEEDER IS DEFINED AS THE INABILITY TO USE AS A POWER PATH THE ELECTRICAL CONNECTIONS FROM THE OUTPUT TERMINALS OF THE ASCENT ECA'S TO THE BAT FEED TIE CIRCUIT BREAKERS. SINCE NO SINGLE OPEN FAILURE CAN RESULT IN LOSS OF AN ASCENT FEEDER, ONLY SHORTED FEEDERS ARE CONSIDERED.

2. GENERAL OPERATIONAL IMPACT

THE AFFECTED BUS CAN ONLY BE POWERED VIA THE BUS CROSSTIE CIRCUIT BREAKERS MAKING EACH BUS SUSCEPTIBLE TO A SHORT ON THE OTHER. IN THIS CONFIGURATION, LOSS OF THE REMAINING FEEDER IS CATASTROPHIC. ALSO, A SHORTED ASCENT FEEDER RESULTS IN LOSS OF THE CORRESPONDING DESCENT FEEDER (IF UNSTAGED) AND TWO DESCENT BATTERIES. THE ASCENT BATTERY THAT POWERED THE LOST BUS VIA ITS NORMAL FEEDPATH CAN BE USED ON ITS BACKUP FEEDPATH TO POWER THE REMAINING GOOD BUS.

3. SPECIFIC OPERATIONAL IMPACT (REF MR 22-21)

(A) NOMINAL MISSION

ALL PHASES - LOSS OF AN ASCENT FEEDER WILL REQUIRE AN ABORT AND IMMEDIATE RETURN TO THE CSM BECAUSE THE SUBSEQUENT FAILURE OF THE OTHER ASCENT FEEDER WOULD RESULT IN THE INABILITY TO POWER THE SPACECRAFT. DOCKED SYSTEMS EVALUATION CAN BE PERFORMED WITH THE HATCH OPEN AND THE TUNNEL CLEAR. THE CREW COULD SAFELY RETURN TO THE CSM IF ALL POWER WAS LOST DUE TO A SUBSEQUENT SHORT.

(B) ALTERNATE MISSIONS

NO UNDOCKED ALTERNATE MISSION WILL BE CONSIDERED BECAUSE OF THE IMPACT OF A SUBSEQUENT EPS FAILURE.

D. DESCENT BATTERY(S)

1. DEFINITION (REF MR 22-2)

A DESCENT BATTERY IS CONSIDERED LOST IF---

(A) THE BATTERY OUTPUT IS EQUAL TO OR LESS THAN 2 AMPS WHEN CONNECTED TO A BUS - THIS INDICATES THE BATTERY IS INCAPABLE OF DELIVERING POWER AND IS A REASONABLE LIMIT TO DIFFERENTIATE BETWEEN A NORMAL AND A REVERSE CURRENT. A LOW OUTPUT SHOULD ALSO BE ACCOMPANIED BY A LOW BATTERY VOLTAGE.

(B) BATTERY TEMPERATURE EQUAL TO OR GREATER THAN 145 DEG F WITH VOLTAGE AND CURRENT HIGHER THAN NOMINAL - DETECTED BY A BATTERY MALFUNCTION AND WARNING LIGHT WITHOUT THE BATTERY AUTOMATICALLY BEING TAKEN OFFLINE. AT TEMPERATURES GREATER THAN 145 DEG F, PERMANENT DAMAGE TO THE BATTERY OCCURS.

(C) INABILITY TO MEET REQUIRED VOLTAGE REGULATION UNDER LOAD - SELF EXPLANATORY.

(D) INABILITY TO BE CONNECTED TO A FEEDER DUE TO A MALFUNCTIONED ECA - SELF EXPLANATORY.

(E) BATTERY OPEN CIRCUIT LESS THAN 31.8 VDC STEADY STATE - THE NOMINAL OPEN CIRCUIT VOLTAGE WHEN OPERATING IN THE PEROXIDE REGION (LESS THAN 20 AMP-HOURS REMOVED) OF THE DISCHARGE CURVE IS 37V (1.85 V/CELL). THE MINIMUM OPEN CIRCUIT VOLTAGE WHEN OPERATING IN THE MONOXIDE REGION (GREATER THAN 20 AMP-HOURS REMOVED) OF THE DISCHARGE CURVE IS 31.8 V (1.59 V/CELL). A LOWER VOLTAGE INDICATES A DEPLETED BATTERY OR LOSS OF CELLS WITHIN THE BATTERY (1.86 VOLTS/CELL).

2. GENERAL OPERATIONAL IMPACT

LOSS OF ONE OR TWO DESCENT BATTERIES WILL HAVE NO EFFECT ON THE MISSION FROM A SYSTEMS STANDPOINT. AS DEFINED ABOVE, TWO DESCENT BATTERIES COULD BE LOST FOR COMPLETELY UNRELATED REASONS, AND NOT CAUSE LOSS OF CONFIDENCE IN THE BATTERIES. FOR EXAMPLE, ONE BATTERY COULD BE LOST DUE TO AN INTERNAL BATTERY PROBLEM AND ANOTHER LOST DUE TO AN ECA MALFUNCTION. IF BOTH BATTERIES WERE LOST DUE TO IDENTICAL MALFUNCTIONS, SYSTEMS CONFIDENCE WOULD BE WEAKENED BUT THE MISSION WOULD BE CONTINUED UNLESS A DEFINITE PROPAGATING FAILURE ELEMENT IS FOUND. DESCENT POWER REDUNDANCY STILL REMAINS AND BOTH ASCENT BATTERIES ARE AVAILABLE. LOSS OF THREE OR MORE DESCENT BATTERIES INDICATES A SERIOUSLY DEGRADING ELECTRICAL SYSTEM REGARDLESS OF THE REASON FOR THE LOSS AND THE LM SHOULD RETURN TO THE VICINITY OF THE CSM.

R	ITEM
	22-1 CONT

3. SPECIFIC OPERATIONAL IMPACT (REF MR 22-23)

(A) NOMINAL MISSION

(1) ALL PHASES EXCEPT LO GATE TO TOUCHDOWN - LOSS OF ONE OR TWO DESCENT BATTERIES WILL HAVE NO EFFECT ON THE NOMINAL OR ALTERNATE MISSIONS, CONSUMABLES PERMITTING. LOSS OF THREE OR MORE DESCENT BATTERIES WILL CONSTITUTE A MISSION ABORT, RENDEZVOUS, AND DOCKING WITH THE CSM ASAP. SERIOUS ELECTRICAL SYSTEM PROBLEMS ARE SUSPECTED AND EVEN WITH A COMPLETELY NOMINAL ASCENT SYSTEM, THE ELECTRICAL SYSTEM SHOULD NOT BE RELIED UPON. DOCKED SYSTEMS EVALUATION CAN BE PERFORMED WITH THE CONNECTING HATCHES OPEN AND THE TUNNEL CLEAR.

(2) LO GATE TO TOUCHDOWN - THE TIME TO RETURN TO DOCK WITH THE CSM IS 4 HOURS WHETHER THE MISSION IS ABORTED DURING THIS PHASE OR THE LM LANDS, AND THEN LIFTS OFF AT T1. AFTER LO GATE THE RECOMMENDED PROCEDURE IS TO LAND AND LIFTOFF AT T1 OR T3. THIS PROCEDURE IS CONSIDERED SAFER THAN ABORT STAGING AT A LOW ALTITUDE.

(B) ALTERNATE MISSIONS

THE SAME RATIONALE AS FOR NOMINAL MISSIONS APPLIES (REF PARA D.3.(A)). SEE ALSO ASCENT BATTERIES - ALTERNATE MISSIONS.

E. ASCENT BATTERY(S)

1. DEFINITION

SAME AS FOR DESCENT BATTERY (REF PARA D.1)

2. GENERAL OPERATIONAL IMPACT

LOSS OF AN ASCENT BATTERY CONSTITUTES AN ABORT FROM THE NOMINAL MISSION BECAUSE LOSS OF THE REMAINING BATTERY WOULD RESULT IN THE INABILITY TO POWER THE SPACECRAFT FOR STAGE OPERATIONS.

3. SPECIFIC OPERATIONAL IMPACT (REF MR 22-22)

(A) NOMINAL MISSION

(1) UNDOCKING THROUGH PDI+5+30 - THE NOMINAL MISSION WILL BE ABORTED FOR THE LOSS OF ONE ASCENT BATTERY TO AVOID COMMITTING TO STAGED OPERATIONS WITH ONLY ONE ASCENT BATTERY. STAGING SHOULD NOT BE PERFORMED UNLESS NECESSARY FOR CREW SAFETY AND THE LM SHOULD DOCK ASAP.

(2) PDI +5+30 TO TOUCHDOWN - THE LM SHOULD LAND TO PREVENT A ONE BATTERY/ONE BUS ABORT AND STAGING ON ONE PYRO SYSTEM.

R	ITEM
--	-----
	22-1 CONT

SEVERAL OPTIONS ARE AVAILABLE---

ONE BATTERY/ONE BUS ABORT STAGING - THIS IS NOT CONSIDERED TO BE A GOOD SOLUTION SINCE THE LOSS OF A BUS MEANS A LOSS OF REDUNDANCY AND/OR LIMITED CAPABILITIES IN PYRO SYSTEM, GUIDANCE SYSTEMS, ECS, ETC.

ONE BATTERY/TWO BUS ABORT STAGING - THIS IS NOT CONSIDERED TO BE A SOLUTION SINCE THE REMAINING ASCENT BATTERY WOULD NOT BE CONDITIONED TO SUPPORT THE CURRENT STEP ASSOCIATED WITH ABORT STAGING, HENCE IT COULD RESULT IN A LOSS OF GUIDANCE SYSTEMS AND REQUIRE A MANUAL ASCENT.

ONE BATTERY/TWO BUS MANUAL SEQUENCING OF DESCENT TO ASCENT POWER, STAGING, AND APS ON - THIS IS NOT CONSIDERED TO BE A GOOD SOLUTION SINCE THE REMAINING BATTERY MAY OR MAY NOT CONDITIONED FOR THIS PROCEDURE (5 AMP/HOURS MUST HAVE BEEN REMOVED BEFORE THE LAST DESCENT BATTERY IS DISCONNECTED). ALSO ADEQUATE TIME MAY NOT BE AVAILABLE TO COMPLETE THIS PROCEDURE.

LAND, CONFIGURE FOR A ONE BATTERY/TWO BUS T1 L/O USING NORMAL L/O PROCEDURES - THIS IS A REASONABLE SOLUTION SINCE IT RETAINS THE TWO BUS REDUNDANCY, AND THE REMAINING ASCENT BATTERY SHOULD BE ADEQUATELY CONDITIONED WITH 5 AMP HOURS REMOVED INSURING THAT THE GUIDANCE SYSTEMS WILL NOT BE ADVERSELY AFFECTED. IT ALSO SHOULD PROVIDE ADEQUATE TIME TO PROPERLY CONFIGURE THE SPACECRAFT FOR THE L/O. THE RENDEZVOUS AND DOCKING TIME FOR A L/O AT T1 IS 4 HOURS-- WHEREAS, THE TOTAL TIME FOR LUNAR STAY RENDEZVOUS AND DOCKING IS 6 HOURS FOR A L/O AT T2 OR 1 REV LATER AT T3. THE ADVANTAGE OF A T3 L/O IS THAT DESCENT POWER CAN BE USED FOR THE LUNAR STAY TIME-- THEREBY, REDUCING THE ASCENT POWER REQUIREMENTS. THE ADVANTAGE OF A T2 L/O IS THAT THE LM IS IN ORBIT ALMOST IMMEDIATELY AND THE TIME FOR THE REMAINING ASCENT BAT TO FAIL ON THE LUNAR SURFACE IS REDUCED. THE DISADVANTAGE OF A T2 L/O IS THAT THE LM MUST BE POWERED DOWN SINCE ONE BATTERY IS NOT ADEQUATE TO PERMIT A 6 HOUR POWERED UP RENDEZVOUS. THE RENDEZVOUS AND DOCKING TIME FOR A L/O AT T1 IS 4 HOURS. WHEREAS THE TOTAL TIME FOR LUNAR STAY, RENDEZVOUS, AND DOCKING IS 6 HOURS FOR L/O AT T2 OR ONE REV LATER AT T3. THE ADVANTAGE OF A T3 L/O IS THAT DESCENT POWER CAN BE USED FOR THE LUNAR STAY TIME-- THEREBY, REDUCING THE ASCENT POWER REQUIREMENTS. THE ADVANTAGE OF A T2 L/O IS THAT THE LM IS IN ORBIT ALMOST IMMEDIATELY AND THE TIME FOR THE REMAINING ASCENT BATTERY TO FAIL ON THE LUNAR SURFACE IS REDUCED. THE DISADVANTAGE OF A T2 L/O IS THAT THE LM MUST BE POWERED DOWN SINCE ONE BATTERY IS NOT ADEQUATE TO PERMIT A 6 HOUR POWERED UP RENDEZVOUS.

(3) LUNAR STAY - LOSS OF AN ASCENT BATTERY WHILE ON THE LUNAR SURFACE REQUIRES A LIFTOFF AT THE FIRST OPPORTUNITY BECAUSE FAILURE OF THE REMAINING ASCENT BATTERY WOULD RESULT IN THE INABILITY TO POWER THE SPACECRAFT AFTER STAGING.

R	ITEM
	22-1 CONT

(4) RENDEZVOUS - LM-ACTIVE RENDEZVOUS WILL BE PERFORMED AS LONG AS SUFFICIENT ELECTRICAL POWER TO SUPPORT RENDEZVOUS EQUIPMENT REMAINS.

(H) ALTERNATE MISSIONS

UNDOCKING AND THE DESCENT ORBIT PHASES MAY BE INITIATED WITH LOSS OF ONE ASCENT BATTERY BUT NOT POWERED DESCENT. ANY ALTERNATE MISSION MAY BE PERFORMED WHICH WILL NOT NOMINALLY COMMIT THE LM TO STAGING.

4. LOSS OF BOTH ASCENT BATTERIES

ALL PHASES - CONSTITUTES AN ABORT AND RENDEZVOUS WITH THE CSM ASAP. IF DOCKED, THE LM WILL NOT UNDOCK BECAUSE ANY FAILURE WHICH COULD FORCE THE LM TO STAGE WOULD RESULT IN THE INABILITY TO POWER THE SPACECRAFT.

R	ITEM
--	-----
	22-1 CONT

F. INVERTERS

1. DEFINITION (REF MR 22-2)

AN INVERTER IS CONSIDERED LOST IF THE AC BUS VOLTAGE CANNOT BE MAINTAINED EQUAL TO OR GREATER THAN 110.5 VAC AND LESS THAN 120 VAC OR THE AC BUS FREQUENCY CANNOT BE MAINTAINED EQUAL TO OR GREATER THAN 390 HZ AND EQUAL TO OR LESS THAN 410 HZ. A FUNCTIONAL INVERTER SHOULD OPERATE WELL WITHIN THESE RANGES. AN OUT OF SPEC CONDITION EXISTS FOR ALL AC EQUIPMENT AT OR BEYOND THESE LIMITS.

2. GENERAL OPERATIONAL IMPACT

LOSS OF EITHER OF BOTH INVERTERS DOES NOT PRESENT ANY CREW SAFETY PROBLEM. LOSS OF ALL AC POWER DOES, HOWEVER, SERIOUSLY HANDICAP MISSION PHASES WHERE LOSS OF EQUIPMENT LISTED IN THE AC BUS LOADS/EQUIPMENT TABLE AFFECTS LM CAPABILITY.

3. SPECIFIC OPERATIONAL IMPACT (REF MR 22-24)

(A) ALL PHASES - FOR LOSS OF ONE INVERTER THE MISSION WILL BE CONTINUED.

(B) DOCKED, UNDOCKED - WITH BOTH INVERTERS LOST, CIRCULARIZATION WILL NOT BE PERFORMED BECAUSE THE LM WILL NOT BE COMMITTED TO A RENDEZVOUS WITHOUT THE RENDEZVOUS RADAR.

(C) CIRC TO TOUCHDOWN - WITH BOTH INVERTERS LOST, THE LM WILL NOT BE COMMITTED TO POWERED DESCENT OR, IF PDI HAS ALREADY OCCURRED, WILL ABORT IF PRIOR TO LO GATE. LOSS OF ALL AC REDUCES TOTAL SPACECRAFT CAPABILITY TO THE EXTENT THAT FURTHER PROGRESS BECOMES HAZARDOUS. FUNCTIONS LOST INCLUDE--- RENDZ RDR, RNG/ALT METER, BOTH FDAI'S, THE S-BAND STEERABLE ANTENNA, DEDA ONBOARD READOUTS, NUMERIC AND INTEGRAL LIGHTING, DPS READOUTS AND THE TIMERS. AFTER LO GATE, HOWEVER, IT IS PREFERABLE TO ATTEMPT TO LAND.

(D) LUNAR STAY - THE MISSION WILL BE CONTINUED WITH LOSS OF BOTH INVERTERS SINCE THE SITUATION CANNOT WORSEN INSOFAR AS AC IS CONCERNED AND IT IS NOT CRITICAL TO THESE PHASES.

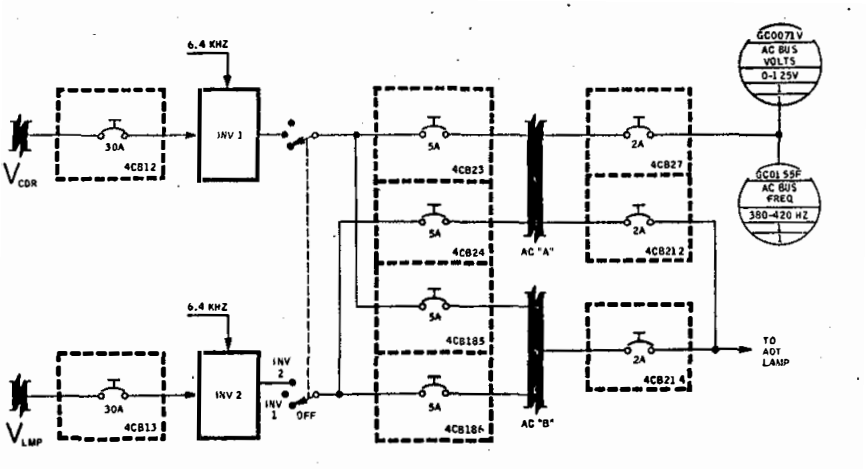

Inverter/AC distribution configuration.

R	ITEM	
	22-1 CONT	

G. AC BUS(ES)

1. DEFINITION (REF MR 22-2)

AN AC BUS IS CONSIDERED LOST IF POWER CANNOT BE SUPPLIED TO IT, IF THE BUS VOLTAGE CANNOT BE MAINTAINED EQUAL TO OR LESS THAN 120 AND EQUAL TO OR GREATER THAN 110.5 VAC, OR THE BUS FREQUENCY EQUAL TO OR LESS THAN 410 AND EQUAL TO OR GREATER THAN 390 HZ.

2. GENERAL OPERATIONAL IMPACT

LOSS OF AC BUS A WILL RESULT IN LOSS OF THE DESCENT ENGINE GIMBALING AND A SEVERELY HANDICAPPED RENDEZVOUS BECAUSE OF LOSS OF THE RENDEZVOUS RADAR, RNG/RNG RT ALT/ALT RT METER, GASTA, AND INTEGRAL LIGHTING. THE MAJOR IMPACT OF LOSS OF AC BUS B WOULD BE LOSS OF THE HBR TM IF A 210 FOOT ANTENNA IS NOT AVAILABLE-- THUS HANDICAPPING SYSTEMS ANALYSIS AND CAUSING LOSS OF TRAJECTORY INFORMATION. LOSS OF BOTH AC BUSES WOULD CAUSE LOSS OF ALL OF THE ABOVE, PLUS BOTH FDAI'S AND THE AOT.

3. SPECIFIC OPERATIONAL IMPACT (REF MR 22-25)

(A) NOMINAL MISSION

(1) DOCKED, UNDOCKED - LOSS OF AC BUS A OR BOTH BUSES WILL PREVENT INITIATING CIRCULARIZATION DUE TO LOSS OF THE DESCENT ENGINE GIMBALS AND RENDEZVOUS RADAR. LOSS OF ONLY AC BUS B WILL NOT INHIBIT CIRCULARIZATION SINCE NO CRITICAL FUNCTIONS ARE LOST.

(2) PDI THROUGH TOUCHDOWN - WITH THE LOSS OF EITHER BUS A OR BUS B THE MISSION WILL BE CONTINUED SINCE TOTAL SPACECRAFT CAPABILITY IS NOT SEVERELY HANDICAPPED WITH LOSS OF ONE AC BUS. SHOULD BOTH BUSES BE LOST, ALL AC IS LOST AND POWERED DESCENT, UNTIL LO GATE, WILL BE ABORTED (SEE PARA F.3.(C)).

(3) LUNAR STAY - AFTER TOUCHDOWN, LOSS OF AC POWERED EQUIPMENT IS NOT CRITICAL. ALSO, IF ONE AC BUS IS LOST, EARLY LIFTOFF WILL NOT COMPENSATE FOR THE LOSS. MOREOVER, THERE IS NO REASON TO EXPECT FAILURE OF ONE BUS TO AFFECT RELIABILITY OF THE REMAINING BUS.

22-2 NO RATIONALE REQUIRED

22-3 NO RATIONALE REQUIRED

R	ITEM

22-10 OVERCURRENT PROTECTION

THE MISSION WILL BE CONTINUED WITH LOSS OF OVERCURRENT PROTECTION-- IF THIS PROTECTION IS LOST PRIOR TO EARTH LIFTOFF, A HOLD WILL BE CALLED.

ECA CIRCUITRY, ASSOCIATED WITH CURRENT MEASURING, DETECTS AN OVERCURRENT CONDITION (GREATER THAN 150 AMPS) AND APPLIES POWER TO THE ''RESET'' COILS OF THE RELAY CONNECTING THE BATTERY TO THE FEEDER.

ECA OVERCURRENT PROTECTION IS DEFINITELY LOST IF BOTH CIRCUIT BREAKERS POWERING THE DESCENT OR ASCENT ECA'S FAIL OPEN, OR IF AN ASCENT BATTERY NORMAL FEED CONTACTOR IS LOST.

OVERCURRENT PROTECTION IS PROBABLY LOST IF A BATTERY CURRENT CANNOT BE MEASURED OR A BATTERY CANNOT BE SWITCHED OFFLINE. IT SHOULD BE NOTED THAT IF CURRENT CANNOT BE MEASURED, THE PROBLEM COULD BE IN THE CURRENT MEASURING CIRCUITRY OR IN THE INSTRUMENTATION. LIKEWISE IF THE BATTERY CANNOT BE SWITCHED OFFLINE MANUALLY, THE PROBLEM CAN BE IN THE ECA OR IN THE MANUAL SWITCH AND ASSOCIATED CONTROL LINES EXTERNAL TO THE ECA. SINCE IT IS IMPOSSIBLE TO ISOLATE A FAULT EXTERNAL TO THE ECA (OVERCURRENT PROTECTION REMAINS) FROM CERTAIN FAULTS IN THE ECA (OVERCURRENT PROTECTION LOST), IT MUST BE ASSUMED THAT IF THESE ANOMALIES OCCUR IN FLIGHT THAT OVERCURRENT PROTECTION HAS BEEN LOST.

A. IF OVERCURRENT PROTECTION IS LOST ON AN INDIVIDUAL DESCENT BATTERY, THE BATTERY WILL BE LEFT ONLINE IF REQUIRED.

THE OTHER DESCENT BATTERY CURRENTS AND VOLTAGES PROVIDE THE NECESSARY INDICATIONS AS TO THE STATUS OF THE BATTERY(S) WITHOUT OVERCURRENT PROTECTION. THE BATTERY(S) WILL BE INDIVIDUALLY TAKEN OFFLINE MANUALLY IF AN OVERCURRENT CONDITION IS INDICATED. IN THE EVENT THAT THE BATTERY(S) CANNOT BE SWITCHED OFFLINE MANUALLY, ALL DESCENT BATTERIES WILL BE DEADFACED IF AN OVERCURRENT CONDITION OCCURS ON THE BATTERY(S) WHICH CANNOT BE SWITCHED MANUALLY.

B. IF ALL DESCENT OVERCURRENT PROTECTION IS LOST, BOTH ASCENT BATTERIES WILL BE PARALLELED WITH THE DESCENT BATTERIES ONLINE PERIODICALLY TO MONITOR CURRENT AND OBTAIN A CONSUMABLE TREND.

THE TOTAL CURRENT OF THE LM CAN BE ESTIMATED BY THE CURRENT BEING DELIVERED BY THE ASCENT BATTERIES AND A CONSUMABLE TREND DEVELOPED. THIS WILL ALLOW COMPLETION OF THE NOMINAL MISSION EXCEPT FOR THE TWO MAN EVA. A ONE MAN EVA IS CONSIDERED ADVISABLE TO ENABLE ONE CREWMAN TO REMAIN IN THE LM TO MONITOR THE EPS. IF THE TREND DATA IS INADEQUATE AND THE BATTERIES DEPLETE SOONER THAN EXPECTED, SUFFICIENT CONSUMABLES WILL BE AVAILABLE IN THE ASCENT BATTERIES FOR A SAFE RETURN TO THE CSM.

C. IF ONE OR BOTH ASCENT BATTERY NORMAL FEED CONTACTORS FAIL OPEN, THE SPACECRAFT CONFIGURATION FOR ASCENT STAGE ONLY OPERATIONS WILL USE BACKUP FEEDS ON BOTH ASCENT BATTERIES WITH OPEN BUS CROSSTIES.

BOTH BUSES WILL BE INDEPENDENTLY POWERED AND ISOLATED FROM EACH OTHER SO THAT A SHORT ON ONE BUS OR FEEDER WILL NOT AFFECT THE OTHER.

R	ITEM	
	22-11	THE ASCENT BATTERIES WILL BE PRECONDITIONED FOR---

A. ABORT STAGING WITH TWO ASCENT BATTERIES/SPLIT BUS OPERATION - BY REMOVING A MINIMUM OF 2.5 AMP HOURS FROM THE BATTERY ON THE LMP BUSS (NORMALLY BATTERY 5) AND A MINIMUM OF 5 AMP HOURS FROM THE BATTERY ON THE CDR BUS (NORMALLY BATTERY 6) IMMEDIATELY PRIOR TO PDI.

TESTS HAVE SHOWN THAT WITH THE CURRENT STEPS ACCOSICATED WITH THE CDR AND LMP BUSES AT ABORT STAGING, THE ABOVE PRECONDITIONING IS REQUIRED TO PREVENT THE VOLTAGE AT THE AEA FROM FALLING BELOW 21.5 VDC FOR GREATER THAN 0.5 SECONDS (LOSS OF AEA MEMORY) OR THE VOLTAGE AT THE PGNS FROM FALLING BELOW 22.6 +/- 0.3 VDC FOR GREATER THAN 0.5 SECONDS (LGC RESTART). THE CURRENT STEP IN THIS CASE IS ESSENTIALLY ONE LARGE STEP ON EACH BUS.

B. LUNAR L/O OR STAGING DURING COASTING FLIGHT WITH TWO ASCENT BATTERIES/SPLIT BUS OPERATION - BY REMOVING A MINIMUM OF 2.5 AMP HOURS FROM EACH ASCENT BATTERY IMMEDIATELY PRIOR TO DISCONNECTING THE LAST DESCENT BATTERY FROM EACH BUS.

THIS PROCEDURE IS REQUIRED TO AVOID UNDERVOLTAGES AT THE GUIDANCE EQUIPMENT (AEA AND LGC) WHEN THE LM IS NOT IN POWERED FLIGHT.

THE CURRENT STEP IN THIS CASE IS SMALLER SINCE IT IS A SUCCESSION OF STEPS WHEN NOMINAL LIFTOFF/STAGING PROCEDURES ARE USED. SEQUENTIALLY REMOVING THE TWO DESCENT BATTERIES ON EACH BUS RESULTS IN TWO SMALLER STEPS, AND SUBSEQUENT STAGING, APS ON, AND RCS JETS FIRING CONSTITUTES THE REMAINING STEPS.

C. LUNAR L/O OR STAGING DURING COASTING FLIGHT WITH ONE ASCENT BATTERY/TWO BUS OPERATION - BY REMOVING A MINIMUM OF 5 AMP HOURS FROM THE REMAINING ASCENT BATTERY IMMEDIATELY PRIOR TO DISCONNECTING THE LAST DESCENT BATTERY FROM THE BUS.

THIS PART OF THIS MISSION RULE COVERS THE CAPABILITY TO SWITCH TO ASCENT POWER AND STAGE DURING COASTING FLIGHT OR DURING LUNAR STAY AT ANY TIME PROVIDED A MINIMUM OF 5 AMP HOURS HAVE BEEN REMOVED IMMEDIATELY PRIOR TO DISCONNECTING THE LAST DESCENT BATTERY.

IF THE REMAINING ASCENT BATTERY HAS A MINIMUM OF 5 AMP HOURS REMOVED AT TOUCHDOWN, IT WOULD BE THERMALLY AND CHEMICALLY CONDITIONED TO SUPPORT A T1 OR T2 L/O WITHOUT ADVERSELY AFFECTING THE GUIDANCE SYSTEMS. IN THIS CASE THE CURRENT STEPS WOULD BE A SUCCESSION OF STEPS AS EACH DESCENT BATTERY IS DISCONNECTED FOLLOWED BY ADDITIONAL STEPS AS A RESULT OF STAGING AND POWERED FLIGHT. HOWEVER, A ONE BATTERY/TWO BUS ABORT STAGING DURING POWERED DESCENT IS PRECLUDED SINCE THE REMAINING ASCENT BATTERY WOULD NOT BE CONDITIONED TO SUPPORT THE HIGH CURRENT STEP INVOLVED WITH ABORT STAGING, WHICH IS CAUSED BY NEAR SIMULTANEOUS SWITCHOVER FROM DESCENT TO ASCENT POWER, STAGING, APS ON, AND RCS JET FIRINGS.

R	ITEM	
	22-12	BUS TIE CIRCUIT BREAKERS AT LEAST ONE OF THE BAL LOAD CROSSTIE (30A) CIRCUIT BREAKERS WILL BE OPEN FOR MAIN PROPULSION BURNS, STAGING, AND WHENEVER BOTH ''AEA'' CIRCUIT BREAKERS ARE CLOSED. THIS PREVENTS LOSS OF, OR VOLTAGE TRANSIENTS ON, BOTH BUSES DURING CRITICAL MISSION PHASES SHOULD A SHORT OCCUR ON A BUS. THE AGS IS POWERED REDUNDANTLY VIA DIODES FROM BOTH BUSES AND WILL NOT BE AFFECTED. AT LEAST ONE OF THE BUS CROSSTIES (100A) WILL NOMINALLY NEVER BE CLOSED, WITH BOTH THESE BREAKERS CLOSED, A SHORT ON ONE BUS WOULD DEFINITELY INDUCE TRANSIENTS ON THE OTHER BUS WHICH WOULD BE DETRIMENTAL TO THE AEA,
	22-13	SHORT ISOLATION ELECTRICAL POWER WILL NEVER BE INTENTIONALLY APPLIED TO A SHORT TO HELP DETERMINE ITS LOCATION UNLESS THE FEEDER FAULT LIGHT HAS FAILED. A GOOD BUS WILL NEVER BE CROSSTIED INTO A SHORT OR POSSIBLE SHORT, FOR LM-6 AND SUBSEQUENT, THE BUS FAULT LIGHT HAS BEEN CONNECTED TO THE FEEDERS ENABLING A RAPID DETERMINATION OF FEEDER VS BUS SHORTS AND ELIMINATING THE NEED TO INTENTIONALLY FEED A SHORT, THE BUSES WILL NEVER BE CROSSTIED TO DETECT THE LOCATION OF A SHORT WHICH ELIMINATES THE POSSIBILITY OF INDUCING VOLTAGE TRANSIENTS ON THE REMAINING BUS,
	22-14	INVERTER SWITCHING THE INVERTERS WILL BE SWITCHED FOR A VOLTAGE EQUAL TO OR LESS THAN 112VAC OR A FREQUENCY EQUAL TO OR GREATER THAN 402 HZ OR EQUAL TO OR LESS THAN 398 HZ. SHOULD THE INVERTER OPERATE OUTSIDE THESE LIMITS, A MASTER ALARM WILL BE TRIGGERED INDICATING DEGRADED INVERTER OPERATION. SWITCHING INVERTERS WILL CLEAR THE MASTER ALARM AND INDICATE WHETHER THE FAILURE WAS THE FAULT OF THE INVERTER, THE AC DISTRIBUTION SYSTEM, OR INSTRUMENTATION.
	22-15	BATTERY MANAGEMENT BATTERIES WILL BE MANAGED DURING LUNAR STAY TO MAINTAIN EQUAL DISSIPATION OF AVAILABLE ENERGY WITHIN TBD AMP-HOURS BETWEEN ALL BATTERIES ONLINE. BATTERIES HAVING THE SAME CHARACTERISTICS SUCH AS INTERNAL RESISTANCE, TEMPERATURE, STATE OF CHARGE, AND CHEMICAL MAKEUP SHOULD DISCHARGE FAIRLY EVENLY WHEN PARALLELLED, DUE TO THE PHYSICAL LOCATION OF THE BATTERIES ON THE COOLANT LOOPS THERE WILL BE A DELTA IN TEMPERATURES CAUSING SOME DIFFERENCE IN THE DISCHARGE RATES OF THE BATTERIES. HOWEVER, AT SOME POINT THE DELTA AMP-HOURS BETWEEN THEM WILL INDICATE THAT THE DIFFERENCE IN THEIR PHYSICAL MAKEUP PREVENTS EVEN DISCHARGING AND THEREFORE BATTERY MANAGEMENT WILL BE EXERCISED IF REQUIRED TO MEET MISSION OBJECTIVES OR TO MAINTAIN NOMINAL CREW PROCEDURES. AT ALL TIMES THE CAPABILITY OF SPLITTING THE BUSES WITH NOMINAL ASCENT/DESCENT SHARING PRIOR TO LUNAR LIFTOFF WILL BE MAINTAINED.

R	ITEM	
	22-16	SHORTED DESCENT FEEDER FOR A SHORTED DESCENT FEEDER, THE ASCENT BATTERIES WILL BE PLACED ON NORMAL FEED WITH THE SHORT ISOLATED VIA THE DEADFACE RELAY. OPERATIONALLY THIS RESULTS IN THE LOSS OF ALL REMAINING DESCENT ELECTRICAL ENERGY FOR CONSUMABLE CONSIDERATIONS. THE TWO DESCENT BATTERIES THAT STILL HAVE AN OPERABLE FEEDPATH WILL BE USED ONLY IF NECESSARY TO MAINTAIN CREW SAFETY. IF THE DESCENT BATTERIES ARE NOT DEADFACED FOR A SHORT ON A DESCENT FEEDER, A SUBSEQUENT SHORT ON THE OTHER FEEDER SYSTEM OR BUS WOULD REMOVE ALL POWER FROM THE LM. POWER CANNOT BE RESTORED USING THE ASCENT BATTERIES AND FEEDERS BECAUSE THE SHORT MUST BE ISOLATED FROM THE BUS AND ASCENT FEEDERS VIA THE DEADFACE RELAY WHICH REQUIRES POWER TO BE OPERATED. BY ISOLATING A DESCENT FEEDER SHORT, ALL DESCENT ELECTRICAL POWER IS LOST. HOWEVER IN A CONTINGENCY SUCH AS SUBSEQUENT LOSS OF ALL ASCENT BATTERIES THE TWO DESCENT BATTERIES NOT ON THE SHORTED FEEDER COULD BE USED AGAIN BY CONNECTING THE DEADFACE RELAY. THE CONSUMABLES IN ALL DESCENT BATTERIES WILL BE CONSIDERED UNAVAILABLE FOR MISSION PLANNING SUBSEQUENT TO A FEEDER SHORT.
	22-17	LOSS OF ONE ASCENT BATTERY WITH THE LOSS OF ONE ASCENT BATTERY, THE REMAINING ASCENT BATTERY WILL BE PLACED ON BOTH NORMAL AND BACKUP FEEDS WITH THE CROSSTIES OPEN. THIS PROCEDURE POWERS BOTH BUSES WITH A MINIMUM VOLTAGE DROP. IT ALSO PROVIDES AUTOMATIC ISOLATION OF A SHORT ON EITHER BUS, SINCE THE BUS TIE (C/B'S) WOULD BE OPEN, THERE WOULD BE NO PROTECTION FOR A SHORT ON EITHER FEEDER SINCE THE VOLTAGE ON BOTH BUSES WOULD DROP TOO LOW TO OPERATE THE ECA RELAYS.

R	ITEM	
	22-18	OPEN DESCENT FEEDER OR LOSS OF TWO DESCENT BATTERIES ON SAME BUS FOR AN OPEN DESCENT FEEDER OR FOR THE LOSS OF TWO DESCENT BATTERIES ON THE SAME BUS THE CROSSTIE BAL LOAD CIRCUIT BREAKERS WILL BE CLOSED ON THE LUNAR SURFACE AND THE MISSION CONTINUED WITHIN THE CONSUMABLES BUDGET. IF ONLY ONE FEEDER IS BEING UTILIZED TO FEED POWER TO THE BUSES AND A SHORT OCCURRED ON THIS FEEDER, THERE WOULD BE NO WAY TO CLEAR THE SHORT AUTOMATICALLY SINCE THE VOLTAGE WOULD BE TOO LOW TO OPERATE THE ECA RELAYS. THE POSSIBILITY OF A SHORT IN A STATIC SITUATION ON THE LUNAR SURFACE IS CONSIDERED REMOTE ENOUGH TO ACCEPT THIS RISK. IF A SHORT DID OCCUR, A CONNECTOR OR WIRE WOULD PROBABLY MELT TO OPEN THE CIRCUIT WITH NO CATASTROPHIC CONSEQUENCE.
	22-19	SHORTED ASCENT FEEDER ON LUNAR SURFACE FOR A SHORTED ASCENT FEEDER ON THE LUNAR SURFACE, THE ASCENT BATTERIES WILL NOT BE CONNECTED UNTIL THE NOMINAL TIME TO MEET PRECONDITIONING REQUIREMENTS. DURING LUNAR SURFACE OPERATIONS, THE ASCENT BATTERIES ARE NOT PLACED ON LINE UNTIL THE NOMINAL TIME TO CONSERVE ASCENT ELECTRICAL POWER. PLACING THE ASCENT BATTERIES ON LINE DOES NOT PROVIDE ANY ADDITIONAL PROTECTION IN THE EVENT OF A SHORT ON THE GOOD BUS. THE LOAD REQUIREMENTS ARE WITHIN THE CURRENT HANDLING CAPABILITY OF THE TWO REMAINING DESCENT BATTERIES.
	22-20	REF RATIONALE FOR MR 22-1
	22-21	REF RATIONALE FOR MR 22-1
	22-22	REF RATIONALE FOR MR 22-1
	22-23	REF RATIONALE FOR MR 22-1
	22-24	REF RATIONALE FOR MR 22-1
	22-25	REF RATIONALE FOR MR 22-1

R	ITEM

LM ENVIRONMENTAL CONTROL

23-1 LM GO/NO-GO CRITERIA CHART AND ASSOCIATED SPECIFIC MISSION RULES

TO INITIATE THE FOLLOWING MISSION PHASES, THE ECS SYSTEM MUST PROVIDE THE FOLLOWING MINIMUM CAPABILITIES (REF LM TELMU GO CRITERIA IN SECTION 3 OF MR)---

A. LOSS OF SUIT LOOP INTEGRITY

1. DEFINITION (REF MR 23-2)

TOTAL PGA/SUIT LOOP LEAKAGE EQUAL TO OR GREATER THAN 0.3 PSI/MIN (+0.6 LB/HR) DURING SUIT LOOP PRESSURE CHECK OR A VISIBLE TEAR IN THE PGA.

THIS USAGE RATE WILL ALLOW UNPRESSURIZED CABIN OPERATIONS INCLUDING A TOTAL METABOLIC O2 USE RATE OF 0.17 LB/HR FOR A MINIMUM OF 6 HOURS FROM THE ASCENT O2 TANKS.

2. GENERAL OPERATIONAL IMPACT

THE LOSS OF SUIT LOOP INTEGRITY REQUIRES THAT CABIN PRESSURE INTEGRITY BE MAINTAINED FOR CREW SAFETY. SHOULD THE CABIN PRESSURE SHELL FAIL, THE CREW WOULD BE LOST, SINCE THERE IS A MARGINAL SUPPLY OF ASCENT O2 (2.06 LBS) IN EACH OF TWO TANKS TO MAINTAIN SUIT PRESSURE DURING THE RENDEZVOUS.

3. SPECIFIC OPERATIONAL IMPACT (REF MR 23-20)

(A) NOMINAL MISSION

(1) DOCKED - LM SYSTEMS EVALUATION MAY BE PERFORMED SINCE THE LM AUTOMATIC CABIN REPRESSURIZATION CIRCUITRY WILL BE ACTIVATED-- IN THE EVENT OF A CABIN FAILURE, THERE IS APPROXIMATELY 48 LBS OF O2 IN THE DESCENT TANK WHICH MAY BE USED TO MAINTAIN CABIN PRESSURE WHILE THE CREW IS INGRESSING THE CSM.

(2) UNDOCKING THROUGH PDI +5+30 - IN ORDER TO RETAIN THE DESCENT O2 PURGE CAPABILITY, STAGING SHOULD NOT BE ATTEMPTED. IT IS NECESSARY TO DOCK ASAP IN ORDER TO REDUCE THE CHANCES OF A CABIN PUNCTURE THAT WOULD DEPLETE THE ONBOARD O2 SUPPLY.

(3) PDI +5+30 TO TOUCHDOWN - THE LM MUST BE STAGED TO REACH ORBIT. IF CABIN PRESSURE INTEGRITY SHOULD BE LOST ALSO, THE SUPPLY OF ASCENT O2 COULD NOT MAINTAIN SUIT PRESSURE UNTIL DOCKING HAS BEEN COMPLETED. THE MISSION SHOULD THEREFORE BE ABORTED IN ORDER TO AVOID POSSIBLE DAMAGE TO THE CABIN SHELL AT TOUCHDOWN.

(4) LUNAR STAY - A LOSS OF SUIT LOOP INTEGRITY PRIOR TO EVA PRECLUDES EVA AND REQUIRES TERMINATION OF LUNAR STAY AT NEXT BEST OPPORTUNITY TO MINIMIZE THE TIME TO CSM RETURN.

(5) RENDEZVOUS - SINCE A CSM RESCUE WOULD NOT SAVE TIME, LOSS OF SUIT INTEGRITY DURING THIS PHASE IS NOT CAUSE FOR A CSM-ACTIVE RENDEZVOUS. OPS UNITS ARE AVAILABLE SHOULD A CONTINGENCY SUCH AS LOSS OF CABIN INTEGRITY ARISE DURING THIS PHASE.

R	ITEM
	23-1 CONT

(B) ALTERNATE MISSION

DUE TO THE RISKS INVOLVED, NO UNDOCKED ALTERNATE MISSION WILL BE CONSIDERED AND THE DOCKED ACTIVITIES SHOULD BE VERY LIMITED.

B. CABIN PRESSURE INTEGRITY

1. DEFINITION (REF MR 23-2)

LM PRESSURE VESSEL LEAKAGE SUCH THAT CABIN PRESSURE CANNOT BE MAINTAINED EQUAL TO OR GREATER THAN 4.6 PSIA WITH AN O2 FLOW RATE OF 0.6 LB/HR.

THIS FLOW RATE WILL ALLOW A TOTAL METABOLIC O2 USE RATE OF 0.17 LB/HR FOR A MINIMUM OF 6 HOURS FROM THE ASCENT O2 TANKS. FOR DOCKED ACTIVITIES, THIS WILL BE RELAXED TO A FLOW RATE OF 6 LB/HR. THIS FLOW RATE ALLOWS EITHER THE CSM REGULATORS OR A SINGLE LM DEMAND REGULATOR TO MAINTAIN CABIN PRESSURE GREATER THAN 4.6 PSIA WITHIN CONSUMABLE LIMITATIONS.

2. GENERAL OPERATIONAL IMPACT

THE LOSS OF CABIN PRESSURE INTEGRITY REQUIRES THAT SUIT LOOP INTEGRITY BE MAINTAINED FOR CREW SAFETY. SHOULD THE SUIT LOOP INTEGRITY BE LOST, THE CREW WOULD BE LOST, SINCE THERE IS A MARGINAL SUPPLY OF ASCENT O2 (2.06 LBS) IN EACH OF TWO TANKS TO MAINTAIN CABIN OR SUIT PRESSURE DURING THE RENDEZVOUS.

3. SPECIFIC OPERATIONAL IMPACT (REF MR 23-21)

(A) NOMINAL MISSION

(1) DOCKED - THE DOCKED PHASE WILL BE INITIATED AND/OR CONTINUED WITH A CABIN LEAK RATE LESS THAN 6 LB/HR. EACH DEMAND REGULATOR CAN SUPPLY AN ADEQUATE O2 FLOW UP TO 6.75 LB/HR AT 950 PSIA. AT THIS POINT IN THE TIMELINE, THERE IS APPROXIMATELY 48 LBS OF O2 IN THE DESCENT TANK, PROVIDING NORMAL LM PRESSURIZATION FOR AT LEAST 8 HOURS. THE DOCKED PHASE CAN BE INITIATED WITH ONE CREW MEMBER ON THE TRANSFER UMBILICAL, WITH A CABIN LEAK GREATER THAN 6.0 LB/HR. HOWEVER, IF THE LEAK RATE CANNOT BE REDUCED, THE LM MISSION WILL BE TERMINATED. THE INFORMATION TO BE OBTAINED FROM A SYSTEMS EVALUATION WOULD NOT WARRANT CONTINUED EXPOSURE OF THE CREW MEMBER TO THIS POTENTIALLY HAZARDOUS CONDITION.

(2) UNDOCKING TO PDI +5+30 - IN ORDER TO MAINTAIN THE DESCENT O2 SUPPLY, THE LM SHOULD NOT BE COMMITTED TO STAGING. THE LM SHOULD ABORT AND DOCK ASAP TO REDUCE THE CHANCE THAT A GROSS LOSS OF SUIT PRESSURE INTEGRITY MAY DEPLETE THE ONBOARD O2.

(3) PDI +5+30 TO LO GATE - THE MISSION SHOULD BE ABORTED TO AVOID RISKS OF LANDING AND TO MINIMIZE THE RETURN TIME TO THE CSM.

(4) LO GATE TO TOUCHDOWN - THE MISSION SHOULD BE CONTINUED WITH AN APPARENT CABIN LEAK RATE GREATER THAN 0.6 LB/HR BECAUSE IT CANNOT BE DEFINITELY ATTRIBUTED TO A LOSS OF CABIN SHELL INTEGRITY (RELIEF VALVE POSSIBLY CRACKING) PRIOR TO TOUCHDOWN, DUE TO THE SHORT TIME PERIOD FOR TROUBLESHOOTING. FURTHER, THE POSSIBILITY OF DAMAGING THE SUIT LOOP AT TOUCHDOWN IS MINIMAL WHEN COMPARED WITH THE POSSIBILITY OF DAMAGING THE CABIN STRUCTURE. LIFTOFF SHOULD BE ACCOMPLISHED AT THE NEXT BEST OPPORTUNITY.

(5) LUNAR STAY - A LOSS OF CABIN PRESSURE INTEGRITY PRIOR TO THE EVA WILL CANCEL THE EVA PRIMARILY BECAUSE ECS/PLSS/ECS TRANSFER WOULD BE PERFORMED IN A VACUUM AND EVA ACTIVITIES CAUSE CONSIDERABLE DELAY IN RETURN TO THE CSM. THE LUNAR STAY WILL BE TERMINATED AT THE NEXT BEST OPPORTUNITY TO MINIMIZE THE TIME TO CSM RETURN.

(6) RENDEZVOUS - SINCE THE ASCENT O2 WILL PERMIT AT LEAST 6 HRS OF CLOSED SUIT LOOP OPERATION (SPEC SUIT LEAK PLUS CREW CONSUMPTION 0.25 LB/HR), AND THE CREW CAN PERFORM ALL NECESSARY FUNCTIONS IN A HARDSUIT, LOSS OF CABIN INTEGRITY DURING THIS PHASE WOULD NOT BE CAUSE FOR CSM RESCUE. OPS UNITS ARE AVAILABLE SHOULD AN O2 CONTINGENCY ARISE DURING THIS PHASE.

R	ITEM
	23-1 CONT

C. SUIT FAN(S)

1. DEFINITION

A SUIT FAN IS CONSIDERED LOST IF IT CANNOT BE TURNED ON OR IF THE DELTA P ACROSS THE FAN IS LOW ENOUGH (6 IN H2O) TO ACTIVATE THE CAUTION AND WARNING SYSTEM.

2. GENERAL OPERATIONAL IMPACT

FAILURE OF A SINGLE SUIT FAN IS NOT HAZARDOUS SINCE THE TWO LM SUIT FANS ARE REDUNDANT. FAILURE OF BOTH SUIT FANS MEANS LOSS OF THE CAPABILITY TO REMOVE CO2 AND HUMIDITY FROM THE CABIN/SUIT ATMOSPHERE.

THE CO2 BUILDUP IN THE HELMET IS CRITICAL, CAUSING UNACCEPTABLE LEVELS WITHIN 1 TO 3 MINUTES, THEREFORE THE HELMET SHOULD BE REMOVED IMMEDIATELY. CO2 BUILDUP IN THE CABIN, WHILE CRITICAL, PERMITS APPROXIMATELY 4 HOURS OF OPERATION WITHOUT CREW DEGRADATION.

3. SPECIFIC OPERATIONAL IMPACT (REF MR 23-22)

(A) NOMINAL MISSION

(1) DOCKED - FAILURE OF A SINGLE FAN DOES NOT AFFECT THIS PHASE AS THE REDUNDANT FAN CAN MEET PHYSIOLOGICAL REQUIREMENTS. THE LOSS OF BOTH FANS REQUIRES ONE CREWMAN TO IVT INTO THE CSM WHILE THE OTHER CONTINUES DOCKED OPERATIONS ON THE CSM TRANSFER UMBILICAL. SINCE THE TRANSFER UMBILICAL MUST BE USED, LOSS OF SUIT CIRCULATION PRECLUDES UNDOCKED OPERATIONS.

(2) UNDOCKING TO PDI +5+30 - FAILURE OF ONE SUIT FAN DOES NOT AFFECT THIS PHASE SINCE THE REMAINING FAN IS CONSIDERED RELIABLE AND AN ACCEPTABLE BACKUP PROCEDURE IS AVAILABLE FOR RENDEZVOUS IF IT SHOULD FAIL. IF THE REMAINING SUIT FAN FAILS, AN ABORT WILL BE REQUIRED AND CABIN MODE OF OPERATION OR, EGRESS MODE WITH DESCENT O2 PURGE USED TO PREVENT CO2 BUILDUP.

(3) PDI +5+30 TO LO GATE - AFTER PDI +5+30, THE DESCENT TANK CANNOT BE RETAINED FOR PURGING PURPOSES AND FOR A LO GATE TO TOUCHDOWN ABORT, THE TIME TO DOCK IS 4 HOURS. THEREFORE, IF BOTH SUIT FANS FAIL, LM WILL ABORT TO AVOID POSSIBILITY OF CABIN RUPTURE UPON LANDING (CREW LOSS).

(4) LO GATE TO TOUCHDOWN - THE MISSION WILL NOT BE ABORTED FOR LOSS OF BOTH SUIT FANS SINCE RISK OF LANDING IS LESS THAN RISK OF ABORTING AT THIS POINT.

(5) LUNAR STAY - THE MISSION WILL BE CONTINUED WITH THE LOSS OF ONE SUIT FAN SINCE AN ACCEPTABLE WORKAROUND IS AVAILABLE SHOULD THE REMAINING FAN BE LOST.

(6) RENDEZVOUS - WITH THE LOSS OF BOTH FANS, NOMINAL RENDEZVOUS PROCEDURES SHOULD BE FOLLOWED WITH DOCKING OCCURRING ASAP.

(B) ALTERNATE MISSIONS

UNDOCKING AND RENDEZVOUS - FAILURE OF ONE FAN DOES NOT PRECLUDE ANY ALTERNATE MISSION WHICH ALLOWS RETENTION OF THE DESCENT O2 TANK (THROUGH DOCKING IF NECESSARY) FOR O2 PURGE CAPABILITY. ALSO, A LOSS OF CABIN INTEGRITY IS LESS LIKELY FOR ALTERNATES WHICH DO NOT SUBJECT THE LM STRUCTURE TO LANDING AND FITH.

R	ITEM
	23-1 CONT

D. O2 DEMAND REGULATORS

1. DEFINITION

A REGULATOR WILL BE CONSIDERED FAILED IF IT CANNOT MAINTAIN THE DESIRED PRESSURE LEVEL IN EITHER AUTOMATIC (CABIN = 4.8 +/- .2 PSIA OR EGRESS = 3.8 +/- .2 PSIA) MODE.

THIS FAILURE DOES NOT PRECLUDE MANUAL OPERATION (DIRECT OR CLOSED) OF THE AFFECTED REGULATOR(S).

2. GENERAL OPERATIONAL IMPACT

THE PRIME FUNCTION OF THE TWO PARALLEL DEMAND REGULATORS IS TO AUTOMATICALLY PROVIDE O2 TO THE CREW AT SPECIFIED PRESSURES AND FLOW RATES. AN OPEN FAILURE OF A SINGLE REGULATOR (6.75 LB/HR AT 950 PSIA) MAY BE COMPENSATED FOR BY MANUALLY CLOSING THE REGULATOR. HOWEVER, A FAILED CLOSED REGULATOR MAY NOT BE DETECTED EXCEPT DURING SCHEDULED ''CABIN'' REGULATOR CHECKS SINCE THE PARALLEL REGULATOR WILL CONTINUE TO SUPPLY O2 AT THE SPECIFIED PRESSURE. SHOULD BOTH REGULATORS FAIL CLOSED WHILE OPERATING IN THE CABIN MODE WITH HELMETS OFF, THE CABIN MAY BE ''BREATHED DOWN'' FROM 5.0 TO 4.0 PSIA AND THEN REPRESSED TO 5.0 PSIA BY MANUALLY CYCLING EITHER OF THE DEMAND REGULATORS OR THE CABIN REPRESSURIZATION VALVE. WITH NORMAL USAGE RATES (0.25 LB/HR), THIS MANUAL OPERATION IS NECESSARY EVERY 5.3 HOURS. WHEN OPERATING IN THE EGRESS MODE, FAILURE OF BOTH DEMAND REGULATORS (OPEN OR CLOSED) WILL REQUIRE THE CREW TO ''BREATHE DOWN'' THE SUITS FROM 4.0 TO 3.3 PSIA AND MANUALLY REPRESS TO 4.0 PSIA USING A DEMAND REGULATOR. WITH NORMAL USAGE RATES, THIS DECAY IN PRESSURE WILL TAKE APPROXIMATELY 6 MINUTES.

3. SPECIFIC OPERATIONAL IMPACT (REF MR 23-23)

(A) NOMINAL MISSION

(1) DOCKED - A SINGLE REGULATOR CAN MEET ALL THE REQUIREMENTS FOR DOCKED OPERATIONS. A LOSS OF BOTH REGULATORS SHOULD NOT RESTRICT OPERATIONS WITH HELMET AND GLOVES OFF. LM DESCENT O2 AND CSM MAKEUP O2 IS AVAILABLE IN THE EVENT CABIN INTEGRITY IS LOST.

(2) UNDOCKING/THROUGH PDI - A FAILURE OF ONE REGULATOR WILL NOT CONSTITUTE AND ABORT BECAUSE THE REDUNDANT REGULATOR AND CABIN PRESSURE INTEGRITY ARE AVAILABLE. FAILURE OF BOTH REGULATORS, THUS REQUIRING MANUAL CYCLING IS AN INEFFICIENT MEANS OF SUPPLYING O2, WHICH COULD INTERFERE WITH CREW OPERATIONS AND THUS THE MISSION SHOULD NOT BE CONTINUED.

(3) POWERED DESCENT - AFTER PDI IT BECOMES DIFFICULT IF NOT IMPOSSIBLE TO CONFIRM A DOUBLE REGULATOR CLOSED FAILURE BEFORE LANDING AS THE REGULATORS ARE IN EGRESS AND THE CABIN PRESSURE DECAY WOULD BE INSIGNIFICANT. AN OPEN FAILURE COULD BE DETECTED BECAUSE OF THE HIGH O2 FLOW RATE (APPROX. EQUAL TO 7 LBS/HR). WITH EITHER OR BOTH REGULATORS FAILED CLOSED OR OPEN, MANUAL RECYCLING OF THE VALVES IS REQUIRED. AT THIS TIME, HOWEVER, IT IS CONSIDERED OPTIMUM TO FOLLOW THE NOMINAL CREW TIMELINE AND CYCLE THE VALVES AS REQUIRED.

(4) LUNAR STAY - ONCE LM HAS LANDED, THE REGULATORS MAY BE CYCLED BETWEEN CREW TASKS IN ORDER TO MAINTAIN CABIN PRESSURE. EVA'S WILL NOT BE PERFORMED SINCE A FAILURE TO REPRESS FORCES THE CREW TO CYCLE A DEMAND REGULATOR EVERY 2 TO 6 MINUTES FOR THE DURATION OF THE LM MISSION.

(5) RENDEZVOUS - THE CREW TASK ASSOCIATED WITH CYCLING A VALVE TO COMPENSATE FOR LOSS OF BOTH DEMAND REGULATORS WILL NOT PREVENT THE CREW FROM PERFORMING ALL TASKS REQUIRED FOR LM-ACTIVE RENDEZVOUS.

(B) ALTERNATE MISSIONS

LOSS OF ONE REGULATOR WILL NOT PROHIBIT UNDOCKED/RENDEZVOUS ALTERNATE MISSIONS. HOWEVER, FAILURE OF BOTH REGULATORS PROHIBITS UNDOCKED MISSIONS DUE TO HIGH CREW WORKLOADS.

R	ITEM
	23-1 CONT

E. H2O SEPARATOR(S)

1. DEFINITION

A H2O SEPARATOR WILL BE CONSIDERED LOST IF--- IT CANNOT BE STARTED (APPROX. 1 MIN WHEN DRY), RATE FALLS BELOW 800 RPM WHICH WILL TRIGGER THE CAUTION AND WARNING SYSTEM, OR BOTH SUIT FANS FAIL, THEREBY TERMINATING THE O2 FLOW TO THE TURBINE-OPERATED SEPARATORS.

2. GENERAL OPERATIONAL IMPACT OF LOSS(ES)

THE TWO H2O SEPARATORS ARE REDUNDANT--- ONE H2O SEPARATOR WILL MAINTAIN COMFORTABLE TEMPERATURE/HUMIDITY CONDITIONS FOR THE CREW INDEFINITELY. THE LCG, OPERATING INDEPENDENTLY OF H2O SEPARATORS, CAN MAINTAIN A SAFE CONDITION FOR THE CREW FOR AT LEAST 6 HOURS. NORMALLY, ONE H2O SEPARATOR AND THE LCG OPERATE SIMULTANEOUSLY. IF BOTH H2O SEPARATORS PLUS THE LCG FAIL, THE ONLY COOLING FOR THE CREW IS BY O2 PURGE FLOW OF ABOUT 3.5 LB/HR/MAN. THUS, THE DESCENT TANK COULD PROVIDE UP TO 6 HOURS, BUT ASCENT O2 HAS ESSENTIALLY NO PURGE CAPABILITY. WITHOUT ACTIVE COOLING, THE CREW'S PHYSIOLOGICAL CONDITION DETERIORATES TO A CRITICAL LEVEL IN APPROXIMATELY 1 TO 1-1/2 HOURS IN THE PGA'S.

3. SPECIFIC OPERATIONAL IMPACT (REF MR 23-24)

(A) NOMINAL MISSION

(1) DOCKED - A LOSS OF BOTH SEPARATORS AND THE LCG LOOP WILL NOT PREVENT DOCKED OPERATIONS AS THE CREW NOMINALLY WILL BE PERFORMING TASKS IN THEIR CONSTANT WEAR GARMENTS. ALSO, THE TEMPERATURE/HUMIDITY EFFECT ON THE INDIVIDUAL GRADUALLY INCREASES AND ALLOWS SUFFICIENT NOTICE FOR THE CREW TO TRANSFER TO THE CSM UMBILICAL.

(2) UNDOCKING TO PDI + 5+30 - ONE H2O SEPARATOR IS REQUIRED TO BE ABLE TO MEET THE CREW COOLING REQUIREMENTS FOR A NOMINAL LUNAR SURFACE MISSION. SHOULD BOTH SEPARATORS BE LOST, THE MISSION SHOULD BE ABORTED SUCH THAT THE DESCENT O2 TANK CAN BE RETAINED, IN THE EVENT OF AN ABORT, FOR O2 PURGE BACKUP CAPABILITY.

(3) PDI + 5+30 TO TOUCHDOWN - EVEN IF BOTH H2O SEPARATORS AND THE LCG ARE LOST, LM WILL NOT ABORT POWERED DESCENT. SINCE THE DESCENT STAGE CANNOT BE RETAINED IF LM ABORTS. THE CREW WOULD BE WITHOUT ACTIVE COOLING FOR 4 HOURS (NO O2 PURGE CAPABILITY). IF THE LM LANDED, THE MAXIMUM THE CREW COULD BE WITHOUT COOLING WOULD ALSO BE 4 HOURS SINCE THE DESCENT O2 WILL PROVIDE PURGE COOLING WHILE ON THE SURFACE. THEREFORE, THERE IS NO ADVANTAGE TO ABORTING FOR FAILURES OF WATER SEPARATORS AND/OR THE LCG.

(4) LUNAR STAY - FOR CONTINUED LUNAR STAY, 1 SEPARATOR IS REQUIRED IN ORDER THAT THE HEAT REJECTION CAPACITY OF THE SYSTEM IS NOT LOST. IN THE EVENT BOTH UNITS FAIL, THE CREW SHOULD PURGE AS REQUIRED WITH DESCENT O2 AND IF NECESSARY, REPLENISH THE CABIN WITH DRY O2 JUST PRIOR TO LIFTOFF AT THE NEXT BEST OPPORTUNITY. THIS IS CONSIDERED TO BE AN ACCEPTABLE WORKAROUND FOR CONTINUING THE MISSION WITH THE SINGLE POINT FAILURE CONDITION OF A SINGLE SEPARATOR.

R	ITEM
	23-1 CONT

(5) RENDEZVOUS - THE LM WILL REMAIN ACTIVE AS LONG AS POSSIBLE FOR THE RENDEZVOUS SINCE THE CREW TRAINING IS ORIENTED TOWARD THOSE PROCEDURES.

(B) ALTERNATE MISSIONS

NO UNDOCKED MISSION WILL BE CONSIDERED WITHOUT 1 OF 2 H2O SEPARATORS OPERABLE.

F. O2 TANKS

1. DEFINITION (REF MR 23-2)

O2 TANKS ARE CONSIDERED LOST IF---

(A) DESCENT O2 TANK

INABILITY TO TRANSFER O2 FROM DESCENT TANK OR MSFN CONFIRMATION OF INADEQUATE DESCENT TANK PRESSURE WITH O2 MANIFOLD PRESSURE.

(B) ASCENT O2 TANK

(1) MSFN CONFIRMATION OF LOSS OF ASCENT TANK PRESSURE WITH O2 MANIFOLD PRESSURE-- OR

(2) IF UNSTAGED AND DESCENT TANK GREATER THAN 35 PERCENT, CREW CONFIRM LOSS BY BALANCING ONE TANK AGAINST THE OTHER-- OR

(3) IF (1) AND (2) CANNOT BE PERFORMED, TANK IS ASSUMED LOST FOR LOSS OF ONBOARD AND MSFN READOUT.

2. GENERAL OPERATIONAL IMPACT

A LOSS OF THE DESCENT TANK (48 LBS OF O2) PREVENTS EVA SINCE THE AMOUNT REQUIRED FOR THE TWO REPRESSURIZATIONS (6.55 LBS EACH) CANNOT BE SUPPLIED FROM THE ASCENT TANKS. SECONDLY, DESCENT TANK LOSS ELIMINATES THE AVAILABILITY OF O2 FOR PURGING OPERATIONS (3.5 LBS/HR AT 500 BTU/MAN-HOUR).

AN ASCENT TANK LOSS DEPLETES BY 50 PERCENT THE AMOUNT OF AVAILABLE O2 IN THE ASCENT STAGE TANKS (4.12 FOR BOTH TANKS). SINCE THE NORMAL RENDEZVOUS MAY BE COMPLETED ON ONE ASCENT O2 TANK AND THE CABIN O2 MAY BE CONSIDERED FOR CONSUMABLE USAGE, A LOSS OF ONE TANK WILL NOT PREVENT A LUNAR LANDING.

3. SPECIFIC OPERATIONAL IMPACT (REF MR 23-25)

(A) NOMINAL MISSION

(1.) DOCKED/UNDOCKED/PRE-PDI/POWERED DESCENT - THE MISSION WILL BE ABORTED AT ANYTIME PRIOR TO PDI IF THE DESCENT O2 TANK IS LOST SINCE THE EVA MAYNOT BE PERFORMED AND THERE IS LITTLE TO GAIN FROM LANDING AND LIFTING OFF COMPARED TO THE INHERENT RISKS. AFTER PDI, THE POWERED BURN WILL NOT BE ABORTED FOR LOSS OF THE DESCENT TANK. THE MISSION MAY BE CONTINUED WITH THE LOSS OF ANY SINGLE ASCENT O2 TANK SINCE THE TIME TO DOCKING IS WITHIN THE AMOUNT OF CONSUMABLES THAT COULD BE CONTAINED WITHIN THE REMAINING ASCENT O2 TANK AND THE CABIN IS AVAILABLE AS A BACKUP. SHOULD THERE BE A SUBSEQUENT LOSS OF AN O2 TANK PRIOR TO LO GATE, THE REMAINING PRESSURE VESSEL (TANK OR CABIN) WOULD ONLY BE ABLE TO SUPPORT A 4-HOUR RENDEZVOUS AND THE MISSION SHOULD BE ABORTED.

AT LO GATE, THE LANDING WILL BE CONTINUED IF NO O2 TANKS ARE AVAILIABLE SINCE THE HAZARDS INVOLVED WITH AN ABORT AT THAT POINT MAKE IT IMPRACTICAL.

ADDITIONALLY, THE CABIN MAY BE USED FOR A MAXIMUM OF 9 HOURS (AT 0.25 LB/HR) TO PROVIDE METABOLIC AND CABIN LEAK REQUIREMENTS BEFORE THE CABIN DECREASES TO 3.3 PSIA. ALL OF THE RATIONALE ARE BASED ON SPECIFICATION LEAK AND USAGE RATES.

(2.) LUNAR STAY/RENDEZVOUS - LUNAR STAY SHOULD BE TERMINATED AT THE NEXT BEST OPPORTUNITY SHOULD THE DESCENT O2 TANK BE LOST. LOSS OF THE DESCENT TANK DURING EVA WILL RESULT IN EITHER CLOSED SUIT LOOP LIFTOFF/RENDEZVOUS OPERATIONS OF THE USE OF THE OPS TO PRESSURIZE THE CABIN. A LOSS OF EITHER ASCENT O2 TANK AFTER LANDING WOULD NOT AFFECT LUNAR STAY OPERATIONS. IF SUBSEQUENTLY THE SECOND ASCENT TANK WERE LOST, THE DESCENT TANK COULD SUPPLY METABOLIC AND LEAKAGE REQUIREMENTS UNTIL LIFTOFF. HOWEVER, THERE WILL BE NO FURTHER CABIN DEPRESSURIZATIONS SINCE A FAILURE TO REPRESSURIZE WOULD LEAVE NO LM SOURCE OF O2 TO SUPPORT CLOSED SUIT LOOP OPERATIONS, AND PLSS OPERATIONS FOR RENDEZVOUS ARE HIGHLY UNDESIRABLE. DURING RENDEZVOUS, THE CABIN COULD BE BREATHED DOWN, OR IF RETAINED AND RECHARGED, THE PLSS UNITS COULD BE USED.

R	ITEM
	23-1 CONT

G. COOLANT LOOP S)

1. DEFINITION (REF MR 23-2)

SUSTAINED GLYCOL TEMPERATURE EQUAL TO OR GREATER THAN 50 DEG F AND RISING EXCEPT DURING COOLANT LOOP STARTUP AND DRYOUT (SUBLIMATOR LOST) OR GLYCOL PUMP DELTA P EQUAL TO OR LESS THAN 6 PSID (CIRCULATION LOST) OR KNOWN LOSS OF H2O FEED CAPABILITY TO THE SUBLIMATOR(S).

2. GENERAL OPERATIONAL IMPACT

LOSS OF THE PRIMARY LOOP IS MORE SERIOUS THAN LOSS OF THE SECONDARY SINCE IT COOLS MORE EQUIPMENT (E.G., PNGS) AND IS DESIGNED WITH MORE BUILT-IN REDUNDANCY. PNGS IS USUALLY CONSIDERED UNRELIABLE AFTER OPERATING ABOUT AN HOUR WITHOUT COOLING, AS WOULD BE THE CASE FOR A FAILURE OF THE PRIMARY LOOP. LOSS OF EITHER LOOP IS CONSIDERED LOSS OF THERMAL CONTROL REDUNDANCY. LOSS OF CREW COOLING IS THE MOST SERIOUS IMPACT OF LOSS OF BOTH LOOPS. CREW PHYSIOLOGICAL CONDITION DETERIORATES TO A CRITICAL LEVEL IN APPROXIMATELY 1 TO 1-1/2 HOURS IN PGA'S. FOR LOSS OF BOTH LOOPS, LM EQUIPMENT WILL BE CYCLED AS REQUIRED FOR LIFE SUPPORT, COMMUNICATION, AND GUIDANCE AND CONTROL IN ORDER TO PERFORM A LM ACTIVE RENDEZVOUS. THE CREW MAY BE REQUIRED TO DOFF PGA'S.

3. SPECIFIC OPERATIONAL IMPACT (REF MR 23-26)

(A) NOMINAL MISSION

(1.) DOCKED - OPERATIONS DURING THIS PHASE PERMIT SUFFICIENT TIME FOR CREW INGRESS SHOULD THE SECOND LOOP FAIL.

(2.) UNDOCKING TO PDI - IF THE PRIMARY COOLANT LOOP IS LOST, THE NOMINAL MISSION WILL BE ABORTED SINCE PGNS IS REQUIRED FOR POWERED DESCENT.

(3.) PDI TO LO GATE AND LUNAR STAY - SINCE THE TIME TO CSM DOCKING IS NOT SHORTENED BY ABORTING DURING THESE PHASES, AN ABORT IS NOT WARRANTED JUST BY THE LOSS OF REDUNDANCY. LOSS OF BOTH LOOPS DOES NOT JUSTIFY AN ABORT PRIOR TO LO GATE SINCE RENDEZVOUS TIME IS A MINIMUM AT THIS TIME. WE WILL NOT ABORT FROM LO GATE SINCE IT IS MORE HAZARDOUS TO ABORT THAN TO LAND. HOWEVER, A T OR T2 ABORT WILL BE REQUIRED TO MINIMIZE HEATING TIME ON THE PGNS. LOSS OF BOTH LOOPS ON THE LUNAR SURFACE REQUIRES A NEXT BEST OPPORTUNITY LIFTOFF TO MINIMIZE THE THERMAL EFFECTS. SINGLE LOOP OPERATION IS ACCEPTABLE IF THE BACKUP PROCEDURE IS AVAILABLE.

(4.) RENDEZVOUS -

(B) ALTERNATE MISSION

DOCKED OPERATIONS AND UNDOCKED MISSIONS WHICH NORMALLY REQUIRE NO MORE THAN A 2-HOUR MAXIMUM RETURN TO THE CSM MAY BE CONSIDERED FOR THE LOSS OF A SINGLE COOLANT LOOP.

R	ITEM
	23-1 CONT

H. H2O FEEDPATHS

1. DEFINITION

AN H2O FEEDPATH IS CONSIDERED LOST IF IT CANNOT SUPPLY ENOUGH H2O TO MEET THE HEAT REJECTION DEMANDS OF THE SUBLIMATOR OR THE H2O REGULATOR(S) FAIL OPEN, CAUSING SUBLIMATOR BREAKTHROUGH.

THE NOMINAL FAILURE MODE OF THE WATER REGULATORS IS FAIL OPEN.

2. GENERAL OPERATIONAL IMPACT

SINCE THE TWO PRIMARY H2O REGULATORS ARE SERIES REDUNDANT, FAILURE OF BOTH REGULATORS IN THE OPEN POSITION WILL RESULT IN HIGH PRESSURE DOWNSTREAM OF THE REGULATORS, CAUSING SUBLIMATOR BREAKTHROUGH. FAILURE OF EITHER REGULATOR IN THE CLOSED POSITION WILL STOP THE FLOW OF WATER IN THE PRIMARY WATER FEEDPATH. IF UNCORRECTED EITHER CONDITION WILL EVENTUALLY RESULT IN LOSS OF COOLING FOR THE CREW AND CRITICAL ELECTRONICS. CLOSING THE PRIM EVAP FLOW NO 1 VALVE AND OPENING THE PRIM EVAP FLOW NO 2 VALVE BYPASSES THE FAILURE BY DIRECTING WATER FLOW FROM THE ASCENT TANKS (DESCENT WATER IS AVAILABLE IF NECESSARY), THROUGH THE SECONDARY WATER REGULATOR TO THE PRIMARY LOOP SUBLIMATOR. ONCE THIS ACTION IS TAKEN, THE MISSION MAY BE CONTINUED ALTHOUGH THIS REGULATOR IN THIS FEEDPATH IS A SINGLE POINT FAILURE (CLOSED) FOR LOSS OF BOTH THE PRIMARY AND SECONDARY COOLANT LOOPS. A FAILED OPEN SECONDARY REGULATOR WILL RESULT IN LOSS OF ONLY PRIMARY COOLANT LOOP BECAUSE A SECOND H2O REGULATOR HAS BEEN ADDED DOWNSTREAM OF SEC EVAP FLOW VALVE ON LM-5 AND SUBSEQUENT.

3. SPECIFIC OPERATIONAL IMPACT (REF MR 23-27)

(A) NOMINAL MISSION

(1.) DOCKED - OPERATIONS DURING THIS PHASE PERMIT SUFFICIENT TIME FOR CREW INGRESS SHOULD THE SECOND FEEDPATH FAIL.

(2.) UNDOCKING TO PDI - THE IMPACT AND MISSION ACTION FOR LOSS OF THE PRIMARY H2O FEEDPATH IS THE SAME AS FOR LOSS OF THE PRIMARY COOLANT LOOP. SEE COOLANT LOOPS.

(3.) PDI TO LO GATE AND LUNAR STAY - LOSS OF REDUNDANCY DOES NOT JUSTIFY AN ABORT AT THIS POINT NOR IS A LIFTOFF IMMEDIATELY AFTER TOUCHDOWN WARRANTED. THE MISSION WILL BE CONTINUED IF ONE OF TWO FEEDPATHS IS AVAILABLE WITHIN THE CONSUMABLE CONSTRAINTS. SEE COOLANT LOOPS FOR RATIONALE SINCE LOSS OF BOTH H2O FEEDPATHS CONSTITUTES LOSS OF COOLING.

(4.) RENDEZVOUS - LM HAS ALL RENDEZVOUS EQUIPMENT AVAILABLE BECAUSE BOTH THE PRIMARY AND SECONDARY LOOPS ARE OPERABLE WITH EITHER THE PRIMARY OR SECONDARY FEEDPATH. SEE COOLANT LOOPS FOR RATIONALE FOR LOSS OF BOTH H2O FEEDPATHS.

(B) ALTERNATE MISSION(S)

ANY MISSION WITH MORE THAN A 2 HOUR RETURN TIME TO THE CSM IS NOT ACCEPTABLE.

I. H2O TANKS

1. DEFINITION (REF MR 23-2)

H2O TANKS ARE CONSIDERED LOST IF---

(A) DESCENT H2O TANK

MSFN CONFIRMATION OF LOSS OF DESCENT TANK PRESSURE WITH DES H2O P AND H2O DELTA P, OR

INABILITY TO SUPPLY H2O TO W/B RESULTING IN RISING GLYCOL AND SUIT LOOP TEMPERATURE (CREW AND MSFN) AND DROP IN H2O DELTA P (MSFN ONLY).

(B) ASCENT H2O TANK

LOSS OF MEASUREMENT AND REMAINING TANK FEEDING AT TWICE NORMAL RATE OR ONE TANK FEEDING TWICE NORMAL RATE AND NO CHANGE IN MEASUREMENT ON OTHER TANK.

R	ITEM
	23-1 CONT

2. GENERAL OPERATIONAL IMPACT

A LOSS OF THE DESCENT TANK PRIOR TO PDI WILL ABORT THE LUNAR LANDING. THE DESCENT TANK HAS 234 LBS USABLE H2O AND EACH ASCENT TANK CONTAINS 40 LBS USABLE. AT THIS TIME, AN APPROXIMATE AVERAGE USE RATE OF 6 LBS/HR MAY BE ASSUMED FOR POWERED UP PHASES AND 4 LBS/HR FOR POWERED DOWN (LUNAR SURFACE) PHASES.

ONE ASCENT TANK IS REQUIRED TO CONTINUE THE MISSION THROUGH ALL PHASES. HOWEVER, IN ORDER TO OBTAIN A 6 HOUR LIFETIME ON A SINGLE ASCENT TANK, IT IS QUITE PROBABLE THAT IT WILL BE NECESSARY TO POWER DOWN SOME EQUIPMENT IN THE LATER PART OF THE LM-ACTIVE RENDEZVOUS. SHOULD THE H2O TANK BECOME DEPLETED, THE GLYCOL TEMPERATURE INCREASE WOULD APPROXIMATELY FOLLOW A DRYOUT CURVE. IT IS ESTIMATED THAT THE GLYCOL TEMP INTO THE LOW TEMP ELECTRONICS AREA (PGNS) WOULD REACH 70 DEG F (PREDICTED EQUIPMENT LOSS) IN 60 MINUTES. THE SUIT INLET O2 TEMP WOULD REACH 85 DEG F (PERFORMANCE DEGRADATION) IN 60 MINUTES. IT IS ADVISABLE TO DOFF THE SUIT TO INCREASE THE TIME TO PERFORMANCE DEGRADATION BY ABOUT 180 MINUTES.

3. SPECIFIC OPERATIONAL IMPACT (REF MR 23-28)

(A) NOMINAL MISSION

(1.) UNDOCKING/CIRCULARIZATION/PRE-PDI - LOSS OF THE DESCENT TANK PRIOR TO PDI ABORTS THE LANDING MISSION. THERE IS INSUFFICIENT H2O TO PERFORM AN EVA AND RENDEZVOUS FROM THE ASCENT TANKS.

LOSS OF AN ASCENT TANK DOES NOT ABORT THE LANDING SINCE FAILURE OF THE REMAINING ASCENT TANK MAY BE CIRCUMVENTED WITH THE LOSS OF ALL COOLING PROCEDURE (SEE COOLANT LOOPS PROCEDURE).

(2.) PDI TO LO GATE - LM SHOULD NOT ABORT FOR LOSS OF ANY SINGLE H2O TANK.

HOWEVER, THE LM MUST HAVE 2 OF 3 H2O TANKS TO CONTINUE TO LAND TO PROVIDE REDUNDANCY. THUS, WITH FAILURE OF A SECOND ASCENT TANK, THE DESCENT TANK CAN KEEP THE SPACECRAFT AND CREW COOLED UNTIL AN IN-PHASE LIFTOFF. THE CREW THEN HAS AN EVEN CHANCE FOR SURVIVAL FOR THE 4 HOURS RENDEZVOUS WITHOUT H2O. WITH FAILURE OF THE DESCENT TANK, THE FULL REMAINING ASCENT TANK HAS A 6-HOUR CAPABILITY TO PERMIT LUNAR STAY TO ALLOW AN IN-PHASE LIFTOFF AND A 4-HOUR RENDEZVOUS.

(3.) LO GATE TO TOUCHDOWN - THE LM WILL NOT BE ABORTED DURING THIS PHASE FOR LOSS OF ALL H2O TANKS. HOWEVER, IF ALL H2O TANKS ARE LOST, LM SHOULD LIFTOFF IMMEDIATELY AFTER TOUCHDOWN TO HAVE PGNS AND AGS FOR ASCENT.

(4.) LUNAR STAY - OBVIOUSLY, THE DESCENT TANK IS REQUIRED TO CONTINUE LUNAR STAY BEYOND THE NEXT BEST OPPORTUNITY LIFTOFF. FAILURE OF BOTH ASCENT H2O TANKS REQUIRES LIFTOFF AT THE NEXT BEST OPPORTUNITY SINCE CONTINUING THE MISSION INCREASES THE POSSIBILITY OF LOSING THE DESCENT TANK FORCING ASCENT PREPARATION, AS WELL AS THE RENDEZVOUS, WITHOUT ANY COOLING.

(5.) RENDEZVOUS - LM WILL REMAIN ACTIVE AS LONG AS POSSIBLE. THE CREW MAY BE REQUIRED TO DOFF THEIR PGA'S IF THE THERMAL CONDITIONS BECOME UNACCEPTABLE.

R	ITEM	
	23-2	NO RATIONALE REQUIRED
	23-3	NO RATIONALE REQUIRED
	23-4	NO RATIONALE REQUIRED
	23-5	NO RATIONALE REQUIRED
	23-6	NO RATIONALE REQUIRED

R	ITEM	
	23-10	DELETED
	23-11	ASCENT O2 TANK RECHARGE IF EITHER ASCENT O2 TANK IS EQUAL TO OR LESS THAN 95 PERCENT, IT WILL BE REPLENISHED FROM THE DESCENT O2 WHEN THE DESCENT TANK QUANTITY IS EQUAL TO OR GREATER THAN 35 PERCENT AND AS CLOSE TO STAGING AS POSSIBLE. FULL LOADINGS IN THE O2 TANKS ARE AS FOLLOWS--- DESCENT 2730 PSIA (100 PERCENT) AND EACH ASCENT TANK IS 854 PSIA (100 PERCENT). AN ONBOARD DESCENT O2 READING OF 35 PERCENT (920 PSIA) WILL INDICATE SUFFICIENT DESCENT O2 TANK PRESSURE TO FILL THE ASCENT O2 TANKS. THE TRANSFER SHOULD BE ACCOMPLISHED CLOSE TO STAGING IN ORDER TO AVOID WASTING DESCENT O2 BY HAVING TO REPLENISH THE ASCENT TANKS MORE THAN ONCE AND TO MAXIMIZE THE QUANTITY IN THE ASCENT TANKS FOLLOWING STAGING.
	23-12	PLSS FILL VALVE MANAGEMENT THE PLSS FILL VALVE WILL BE CLOSED EXCEPT FOR REPRESSURIZING THE PLSS AND FOR MSFN REQUESTED READOUTS OF THE O2 MANIFOLD PRESSURE. THE PLSS FILL VALVE WILL NOMINALLY BE KEPT CLOSED SINCE THIS VALVE IS A BACKUP TO THE QUICK DISCONNECT ON THE END OF THE PLSS FILL HOSE (MINIMIZES THE CHANCE OF AN O2 LEAK INTO THE CABIN).
	23-13	O2 USAGE MANAGEMENT CREW WILL GO TO EGRESS MODE IF INSUFFICIENT O2 IS AVAILABLE TO MAINTAIN CABIN PRESSURE FOR THE REQUIRED TIME. ADDITIONALLY, A MISSION PHASE WILL NOT BE INITIATED IF THIS CONDITION CAN BE ANTICIPATED. MAINTAINING CABIN PRESSURE DOUBLES THE O2 USAGE RATE. IF THE O2 SUPPLY IS LOW OR IF IT IS PREDICTED TO BE LOW, THE CREW WILL GO TO THE EGRESS MODE BREATHING THE CABIN DOWN TO 3.8 +/- 0.2 PSIA WHEN THE SUIT LOOP IS AUTOMATICALLY ISOLATED FROM THE CABIN. THIS MAXIMIZES THE O2 LIFETIME.
	23-20	REFERENCE RATIONALE FOR MR 23-1
	23-21	REFERENCE RATIONALE FOR MR 23-1
	23-22	REFERENCE RATIONALE FOR MR 23-1
	23-23	REFERENCE RATIONALE FOR MR 23-1
	23-24	REFERENCE RATIONALE FOR MR 23-1
	23-25	REFERENCE RATIONALE FOR MR 23-1
	23-26	REFERENCE RATIONALE FOR MR 23-1
	23-27	REFERENCE RATIONALE FOR MR 23-1
	23-28	REFERENCE RATIONALE FOR MR 23-1

R	ITEM	
	23-29	FIRE OR SMOKE IN CABIN OR SUIT ACTION SHOULD BE TAKEN TO COMBAT THE FIRE AND ATTEMPT TO DETERMINE ITS ORIGIN. TIME OF TRANSFER TO THE CSM IS DEPENDENT ON THE EXTENT OF THE DAMAGE. ANY POSSIBLE DEGRADATION IN SPACECRAFT CAPABILITY WOULD BE CAUSE TO ABORT THE LUNAR LANDING MISSION.
	23-30	CONTAMINATION IN CABIN ALL ATTEMPTS SHOULD BE MADE TO CLEAR THE CONTAMINATION INCLUDING DECOMPRESSING THE CABIN. IF UNABLE TO CLEAR THE CONTAMINATION AND IT AFFECTS CONTINUED SAFE CREW OPERATIONS, THE MISSION MAY BE TERMINATED EARLY.
	23-31	GLYCOL COOLANT LEAK OBSERVED FLUID IN CABIN CONFIRMED BY TASTE OR PRESENCE OF GLYCOL LOW INDICATION CONFIRMED BY STATE PRESSURE PROP. WHETHER IN THE SUIT OR CABIN, ACTION SHOULD BE TAKEN TO TRANSFER TO THE CSM ASAP. IF IN THE CABIN, THE SUIT LOOP SHOULD BE CONFIGURED TO THE EGRESS MODE AND ISOLATED FROM THE CABIN. IF IN THE SUIT, THE CREW SHOULD DISCONNECT FROM THE SUIT LOOP AND OPERATE STRICTLY ON THE CABIN.

R	ITEM	

LM GUIDANCE AND CONTROL

24-2 NO RATIONALE REQUIRED

24-3 IMU

A. IRIG BAIS UPDATES WILL BE ACCOMPLISHED WHEN GYPO DRIFT IS GREATER THAN OR EQUAL TO +/- .075 DEG/HR (5 MERU).

FIVE MERU REPRESENTS A CUTOFF POINT BELOW WHICH THE BAIS CALCULATION IS AFFECTED BY ALIGNMENT INACCURACIES TO THE POINT WHERE AN UPDATE MAY ACTUALLY INCREASE IRIG DRIFT.

B. THE PGNS WILL BE CONSIDERED NO-GO WITH A GYRO DRIFT GREATER THAN OR EQUAL TO +/- 1.5 DEG/HR (100 MERU). THE MAXIMUM ALLOWABLE VALUE WITHIN THE LGC IS +/- 1.93 DEG/HR (128 MERU).

A GYRO DRIFT OF 1.5 DEG/HR IS CONSIDERED NO-GO SINCE A DRIFT RATE THIS HIGH REPRESENTS SERIOUS HARDWARE PROBLEMS WITHIN THE IMU. REFERENCE MIT/IL STG MEMO 1256.

C. PIPA BIAS UPDATES WILL BE ACCOMPLISHED AS FOLLOWS---

1. NO BIAS UPDATES WILL BE ACCOMPLISHED PRIOR TO 30 MIN OF IMU OPERATION.

   THIRTY MINUTES IS ALLOWED FOR PIPA TEMPERATURE STABLIZATION. REFERENCE MIT/IL STG MEMO 1347.

2. INITIAL BIAS UPDATES WILL BE ACCOMPLISHED IF THE DELTA BIAS IS GREATER THAN OR EQUAL TO +/- 0.03 CM/SEC/SEC, AND SUBSEQUENT UPDATES WILL BE ACCOMPLISHED IF THE DELTA BIAS IS GREATER THAN OR EQUAL TO +/- 0.1 CM/SEC/SEC. BOTH MIT AND G&C DIVISION AGREED IN DATA PRIORITY MEETINGS TO UPDATE THE PIPA BIAS REGARDLESS OF HOW SMALL THE CALCULATED VALUE MIGHT HAVE BEEN. DUE TO THE METHOD OF CALCULATION AND THE GRANULARITY TO THE PIPA READOUT (+/- 0.1 CM/SEC/SEC), A DELTA BIAS OF 0.03 CM/SEC/SEC WAS CHOSEN FOR AN INITIAL UPDATE VALUE, AND 0.1 CM/SEC/SEC FOR SUBSEQUENT UPDATES.

3. PIPA BIAS WILL NOT BE UPDATED WHILE THE LM IS ON THE LUNAR SURFACE.

   NO ATTEMPT WILL BE MADE TO UPDATE PIPA BIAS WHILE ON THE LUNAR SURFACE DUE TO THE UNCERTAINTY OF BIAS DETERMINATION IN A GRAVITY ENVIRONMENT. HOWEVER, THE CALCULATED BIAS WILL BE EXTRAPOLATED FROM THE TIME OF LIFTOFF TO INSERTION TO DETERMINE IF GUIDANCE SWITCH-OVER LIMITS WILL BE VIOLATED.

D. THE PGNS WILL BE CONSIDERED NO-GO IF THE PIPA BIAS EXCEEDS +/- 5.06 CM/SEC/SEC(.166 FT/SEC/SEC). THE MAXIMUM LOAD VALUE WITHIN THE LGC IS +/- 12.5 CM/SEC/SEC. THE MIT RECOMMENDED VALUE FOR A FAILED PIPA IS +/- 5.06 CM/SEC/SEC. REFERENCE MIT/IL STG MEMO 1256.

R	ITEM
	24-4

LGC

A. A MASS UPDATE IS REQUIRED IF THE DIFFERENCE BETWEEN GROUND CALCULATION AND LGC VALUE IS MORE THAN 200 LBS.

IF THE LGC CALCULATED MASS IS GREATER THAN THE ACTUAL VALUE, THE DAP WILL ASSUME CONTROL EFFECTIVENESS OF A HEAVY VEHICLE. THIS ASSUMPTION WILL RESULT IN OVERCONTROL OF THE VEHICLE WITH A RESULTANT LOSS OF RCS FUEL. CONVERSELY IF LGC MASS IS LESS THAN THE ACTUAL MASS, THE VEHICLE BEHAVES SLUGGISHLY SINCE THE DAP ASSUMES IT HAS A LIGHT VEHICLE. IF THE ERROR IS NOT TOO GREAT, NO FUEL PENALTY RESULTS. HOWEVER, IF THE ERROR IS LARGE ENOUGH THE DAP WILL RESPOND WITH NUMEROUS JET FIRINGS IN ATTEMPTING TO OVERCOME THE SLUGGISHNESS OF THE VEHICLE. IN THIS CASE A FUEL PENALTY MAY BE REALIZED.

B. ALL +/- (U-V) JETS WILL BE INHIBITED VIA V65 DURING DOCKED DPS BURNS.

DUE TO RCS PLUME IMPINGEMENT CONSTRAINTS ON BOTH THE CSM AND LM (REF MRR 27-25), THE LM VERTICAL FIRING JETS (+/-X) MUST BE INHIBITED VIA V65 DURING DOCKED DPS BURNS. V65 INHIBITS ONLY THOSE FIRINGS CAUSING ROTATIONS ONCE THE BURN BEGINS. ULLAGE IS NOT AFFECTED BY THIS VERB AND WILL BE HONORED NOMINALLY. NORMAL DAP ATTITUDE CONTROL WILL RESUME AT THE TIME AN ENGINE SHUTDOWN HAS BEEN COMMANDED BY THE LGC.

C. DURING DOCKED MANEUVERS, DPS GIMBAL TRIMMING MUST BE DONE AT GREATER THAN 35 PERCENT THROTTLE IN THE AUTO THROTTLE MODE. THE RECOMMENDED SETTING IS 40 PERCENT.

IN THE DOCKED DPS BURN, AT 10 PERCENT THROTTLE, THE DAP CANNOT CALCULATE SMALL OFFSET ACCELERATIONS NEEDED TO DRIVE THE ENGINE THRUST VECTOR THROUGH THE COMBINED CG OF THE TWO VEHICLES. BECAUSE OF THE LARGE INERTIA OF THE DOCKED COMBINATION, A MUCH GREATER THRUST IS NEEDED TO INCREASE THE DAP'S SENSITIVITY TO OFFSET ACCELERATIONS. FOR THIS PURPOSE, A 40 PERCENT THROTTLE SETTING IS RECOMMENDED. THROTTLE SETTINGS OF GREATER THAN 35 PERCENT HAVE PROVIDED SATISFACTORY THRUST VECTOR ALIGNMENT. THE THROTTLE INCREASE SHOULD BE APPLIED MANUALLY VIA THE CREW TTCA WITH THE THROTTLE CONTROL IN THE AUTO THROTTLE MODE. THE AUTO THROTTLE MODE MUST BE USED SUCH THAT THE LGC CAN COMMAND 100 PERCENT THROTTLE AT TIG PLUS 26 SECONDS. IF THE MANUAL THROTTLE POSITION WERE USED IN THIS PROCEDURE, THE CREW WOULD HAVE TO APPLY THE 100 PERCENT THRUST COMMAND MANUALLY FOR THE REQUIRED TIME. SWITCHING THE THROTTLE CONTROL BACK TO AUTO WILL RESULT IN A 10 PERCENT THROTTLE SETTING AFTER THE LGC HAS ISSUED THE 100 PERCENT COMMANDS SINCE THESE COMMANDS ARE ISSUED ONLY ONCE BY THE LGC.

R	ITEM	
	24-5	RENDEZVOUS RADAR

A. THE RR MUST NOT BE USED TO TRACK CSM TRANSPONDER UNTIL 2.5 HOURS AFTER OPERATE HEATER ACTIVATION AND ANTENNA TEMPERATURE (HPM) IS GREATER THAN OR EQUAL TO 10 DEG F AND THE GYRO PACKAGE IS ESTIMATED TO BE GREATER THAN OR EQUAL TO 15 DEG F.

OPERATING THE RR AT TEMPERATURES LESS THAN THOSE LISTED IN THE ABOVE RULE MAY RESULT IN DEGRADED RR PERFORMANCE AND POSSIBLE UNRECOVERABLE DAMAGE. BASED ON THE VALUE OF THE RR ANTENNA TEMP, IT IS POSSIBLE TO DETERMINE THE APPROXIMATE TIME NEEDED FOR RR WARMUP TO MEET THE ABOVE CONSTRAINTS. IT IS ESTIMATED THAT WORST CASE CONDITIONS WOULD REQUIRE A 2.5 HOUR WARMUP PERIOD. (REF SODB 3.5 - GNC-12).

B. THE RR SHOULD NOT BE OPERATED AT AN ANTENNA TEMPERATURE GREATER THAN OR EQUAL TO 145 DEG F AND/OR A GYRO PACKAGE TEMP (ESTIMATED) OF GREATER THAN OR EQUAL TO 200 DEG F.

OPERATING THE RR AT TEMPERATURES EXCEEDING THOSE LISTED ABOVE MAY RESULT IN DEGRADED RR PERFORMANCE AND UNRECOVERABLE DAMAGE TO THE HPM AND GYRO PACKAGE. EXTREME CARE SHOULD BE TAKEN TO EXTRAPOLATE PRESENT RR TEMPERATURES TO FINAL VALUES BASED ON THE EXPECTED USAGE RATE OF THE RR TO AVOID REACHING AND EXCEEDING THE TEMPERATURE CONSTRAINTS.

C. IF IT IS ESTIMATED THAT THE RR GYRO PACKAGE WILL EXCEED 200 DEG F (HPM APPROX. 135 DEG F) PRIOR TO COMPLETION OF THE BRAKING PHASE, THE RR SHOULD BE TURNED OFF UNTIL REQUIRED FOR TPI AND BRAKING.

TPI AND BRAKING ARE THE MOST CRITICAL PHASES OF THE RENDEZVOUS. RR OPERATION IS MANDATORY DURING THIS PERIOD. THEREFORE, RR OPERATION PRIOR TO CSI AND CDH WILL BE DELETED IN ORDER TO ASSURE RR TEMPERATURES LOW ENOUGH TO SUPPORT TPI AND BRAKING.

D. IF THE ESTIMATED GYRO PACKAGE TEMP SHOULD EXCEED 200 DEG F (HPM APPROX. 135 DEG F) ANYTIME DURING THE RENDEZVOUS PHASE, THE AC POWER TO THE RR SHOULD NOT BE TURNED OFF.

TESTS ON THE GYRO PACKAGE INDICATE THAT IF THE RR AC POWER IS REMOVED WHEN THE GYRO PACKAGE EXCEEDS 200 DEG F, GYRO FAILURE OR DEGRADED OPERATION MAY OCCUR UPON SUBSEQUENT POWERUP.

E. IF THE RR ANTENNA TEMP EXCEEDS THE NOMINAL TEMPERATURE PROFILE BY 15 DEG F THE RR SHOULD BE TURNED OFF IF IT IS NOT NEEDED.

EXCEEDING THE NOMINAL TEMPERATURE PROFILE BY 15 DEG F INDICATES OVERHEATING THAT MAY CAUSE RADAR REDLINES ON THE GYRO PACKAGE TO BE EXCEEDED AT A LATER TIME. THE 15 DEG RULE IS CONSIDERED A TEMPERATURE MANAGEMENT RULE HELPFUL AS AN INDICATOR THAT THE RR SHOULD BE TURNED OFF WHEN NOT NEEDED.

F. IF THE RR OVEN HEATERS ARE TURNED OFF (BOTH THE PGNS--- RNDZ RDR AND HEATERS--- RNDZ RDR OPR OPEN) RR RANGE DATA MUST NOT BE USED UNTIL 17 MIN AFTER RE-ENERGIZING, ASSUMING THE OVEN TEMP HAS DROPPED TO THE COLD RAIL TEMP.

TESTS INDICATE THAT 17 MIN IS REQUIRED TO ALLOW THE RR OVEN TO REACH 160 DEG F FROM WORSE CASE COLD RAIL OF APPROX. 35 DEG F.

	24-6	LANDING RADAR

A. THE LR SHOULD NOT NORMALLY BE OPERATED AT AN ANTENNA TEMP LESS THAN + 50 DEG F. HOWEVER, THE LUNAR LANDING MISSION WILL BE ATTEMPTED IF THE ANTENNA TEMP IS ABOVE THE CRITICAL LIMIT OF -15 DEG F (HARDWARE DAMAGE).

PDI WILL BE INITIATED BELOW THE 50 DEG F VALUE IN THE HOPE THAT AT ALTITUDES WHERE LR DATA IS REQUIRED THE ANTENNA WILL BE UP TO OPERATING TEMPERATURE.

B. LR ACTIVATION WILL BE DELAYED IF THE LR TEMP IS PREDICTED TO BE GREATER THAN 145 DEG F AT PDI+8+30 (HIGATE).

BASED ON THE FACT THAT THE LR MUST BE LOCKED ON AND CONVERGED BY 10,000 FT (THAT IS, NOT MANDATORY AFTER HIGATE), THE PREDICTED OR ACTUAL TEMP RISE RATE CAN BE USED TO DETERMINE HOW LONG BEFORE PDI+8+30 THE LR CAN BE TURNED ON SO AS NOT TO EXCEED 145 DEG F BY HIGATE. BEYOND 145 DEG F, LR OPERATION IS QUESTIONABLE.

R	ITEM
	24-7

AGS

A. THE AGS IS DECLARED NO-GO DURING A GYRO AND ACCELEROMETER CALIBRATION IF THE GYRO DRIFT CHANGE IS GREATER THAN 2.00 DEG/HR AND IF THE ACCELEROMETER BIAS CHANGE IS GREATER THAN 0.039 FT/SEC2 FROM THE VALUE AT THE START OF THE CALIBRATION.

THE ACCEPTABLE BOUNDS ON GYRO DRIFT AND ACCELEROMETER BIAS SHIFTS, WHICH CAN OCCUR BETWEEN TWO SUCCESSIVE CALIBRATIONS, ARE GIVEN IN TABLE 17.1 OF LM/AGS OPERATING MANUAL.

B. THE AGS CAN BE USED TO PERFORM DOCKED ATTITUDE HOLD CONTROL.

SIMULATIONS HAVE PROVEN THAT THE AGS CAN CONTROL THE DOCKED MASS IN AN ATTITUDE HOLD CONFIGURATION AND MAINTAIN THE PROPER DEADBAND WITH A MINIMUM AMOUNT OF RCS PROPELLANT USAGE.

C. THE AGS IN PULSE MODE USING ONLY TTCA CONTROL CAN BE USED TO PERFORM A DOCKED BURN.

SIMULATION RUNS HAVE SHOWN THAT THE DOCKED DPS BURN CAN BE PERFORMED WITH THE LOSS OF THRUST VECTOR CONTROL WITHOUT EXCEEDING THE RCS IMPINGEMENT CONSTRAINTS BY SWITCHING TO AGS PULSE MODE OF OPERATION AND CONTROLLING THE VEHICLE VIA THE TTCA. RECENT TESTS PERFORMED ON A LM DOCKED TO A CSM HAVE SHOWN THAT THE NATURAL BENDING FREQUENCY OF THE DOCKING CONE IS BETWEEN TWO AND THREE CYCLES PER SECOND. THESE TESTS HAVE ALSO SHOWN THAT THE DOCKING CONE CAN WITHSTAND THE FORCES RESULTING FROM TRANSLATION MANEUVERS AS LONG AS THE TRANSLATIONS ARE NOT PULSED AT THE NATURAL BENDING FREQUENCY. THE LM CREW HAS BEEN ADVISED OF THIS AND SAID THAT PROCEDURALLY THEY WOULD NEVER HIT THAT FREQUENCY. IF THE LM IS YAWED TO ALIGN THE VEHICLES C.G.'S IN THE DOCKED APS CONFIGURATION, ATTITUDE CONTROL VIA TTCA HAS PROVED IN SIMULATIONS TO BE AN ACCEPTABLE MODE.

R	ITEM	
	24-20	LOSS OF GUIDANCE STEERING

A. OPERATIONAL AGS

AGS GUIDANCE STEERING IS NOT REQUIRED FOR ALL PHASES OF THIS MISSION BECAUSE IT CANNOT STEER THE LM ALONG THE REQUIRED POWERED DESCENT TRAJECTORY.

B. OPERATIONAL PGNS

DOCKED/UNDOCKED, PRE-PDI, POWERED DESCENT PRIOR TO HIGATE

PGNS GUIDANCE STEERING UTILIZING AN OPERATIONAL PGNS IS REQUIRED TO HIGATE TO STEER THE LM EITHER AUTOMATICALLY (PGNS AUTO) OR MANUALLY (PGNS RATE COMMAND) ALONG THE DESCENT TRAJECTORY.

POWERED DESCENT AFTER HIGATE

AFTER HIGATE OUT-THE-WINDOW AND ONBOARD CUES SHOULD BE SUFFICIENT FOR THE CREW TO MANUALLY STEER THE LM TO TOUCHDOWN AND THEREFORE GUIDANCE STEERING IS NOT REQUIRED. LANDING ENABLES THE CREW TO USE STANDARD PROCEDURES AND ALLOWS ADDITIONAL TIME TO RESOLVE THE PROBLEM.

LUNAR STAY

ON THE LUNAR SURFACE A LOSS OF PGNS GUIDANCE STEERING THAT DOES NOT AFFECT REDUNDANT 3-AXIS ATTITUDE CONTROL IS NOT CAUSE FOR AN ASCENT SINCE AGS GUIDANCE STEERING IS STILL AVAILABLE.

RENDEZVOUS

SINCE THE MAJORITY OF CREW TRAINING IS WITH A LM ACTIVE RENDEZVOUS AND TO CONSERVE CSM CONSUMABLES THE AGS WILL BE USED TO PERFORM A LM ACTIVE RENDEZVOUS IF THE PGNS FAILS.

24-21 LOSS OF FDAI FUNCTIONS (ATT, RATES, ERRORS)

THE FDAI IS A CREW METHOD FOR MONITORING ATTITUDES, RATES, AND ATTITUDE ERRORS DURING CRITICAL PHASES OF THE MISSION-- THEREFORE, CONTINUATION OF THE MISSION IS A CREW OPTION. AFTER HIGATE, OUT-THE-WINDOW CUES ARE ACCEPTABLE FOR LANDING. AFTER LANDING, NOTHING IS GAINED BY AN EARLY LIFTOFF. THE LM ACTIVE RENDEZVOUS IS POSSIBLE USING THE DSKY ATTITUDE READOUTS.

24-22 LOSS OF AOT

SINCE ACCEPTABLE METHODS (0.05 DEG ALIGNMENT ACCURACY) HAVE BEEN DEVELOPED TO FINE ALIGN AND ALSO DETERMINE THE DRIFT OF THE LM IMU WHILE DOCKED WITH THE CSM (SIMULTANEOUS SETS OF LM/CSM CDU ANGLES), THE AOT IS NO LONGER REQUIRED TO OBTAIN THE MANDATORY FINE ALIGNMENT PRIOR TO PDI. ON THE LUNAR SURFACE A GRAVITY ALIGNMENT IS ADEQUATE FOR LIFTOFF, AND A RENDEZVOUS CAN BE ACCOMPLISHED WITH AN ADEQUATE DEGREE OF ACCURACY USING THE RR FOLLOWING A LUNAR SURFACE ALIGNMENT.

R	ITEM	
	24-23	LOSS OF RENDEZVOUS RADAR/VHF RANGING/OPTICAL TRACKING

A. LOSS OF ANY ONE

ALL PHASES

TWO LM-CSM TRACKING SYSTEMS ARE CONSIDERED SUFFICIENT TO ASSURE A SAFE RENDEZVOUS.

B. LOSS OF ANY TWO

DOCKED/UNDOCKED/PRE PDI-A SINGLE POINT FAILURE COULD CAUSE A LOSS OF THE REMAINING ONBOARD TRACKING SYSTEM, SERIOUSLY JEOPARDIZING THE SUCCESS OF THE RENDEZVOUS PHASE. ALSO GROUND TRACKING CAN BE USED TO BACKUP THE NORMAL RENDEZVOUS WHEREAS NO GROUND HELP IS AVAILIABLE FOR THE SHORT RENDEZVOUS.

ALL OTHERS

AFTER PDI THE LM IS COMMITTED TO A RENDEZVOUS, THEREFORE THE SURFACE PHASE IS CONTINUED, RELYING ON GROUND TRACKING AS A BACKUP TO THE REMAINING TRACKING SYSTEM.

24-24 LOSS OF LANDING RADAR

DOCKED/UNDOCKED, PRE-PDI

PRIOR TO INITIATING THE POWERED DESCENT, THE MISSION WOULD NOT BE CONTINUED WITH THE LOSS OF THE LR SINCE LR DATA IS ESSENTIAL FOR STATE VECTOR UPDATING. THE LOSS IN THIS CASE IS ASSUMED TO BE SOME CLEAR CUT TOTAL LOSS SUCH AS CIRCUIT BREAKER FAILURE TO STAY IN.

POWERED DESCENT PRIOR TO ADEQUATE ALTITUDE UPDATING OF LM STATE VECTORS

THE CURRENT MISSION RULE ASSUMES A REQUIREMENT FOR MAINTAING 3 SIGMA PGNS PERFORMANCE WITH A MAXIMUM ALTITUDE DISPERSIONS BEING CORRECTED BY LR UPDATES. IN THIS CASE PGNS DELTA H CONVERGENCE PRIOR TO SOME MINIMUM ALTITUDE IS REQUIRED TO PREVENT PGNS TRAJECTORY DISPERSIONS FROM CAUSING IMPACT WITH THE MOON.

POWERED DESCENT AFTER ADEQUATE ALTITUDE UPDATING OF LM STATE VECTORS

UPON THE DECISION BY GUIDO THAT ADEQUATE UPDATING OF THE LM STATE VECTORS HAS BEEN ACCOMPLISHED, THE REMAINDER OF THE LUNAR DESCENT CAN BE ACCOMPLISHED ON STATE VECTOR DATA ALONE.

R	ITEM	
	24-28	LOSS OF REDUNDANT 3-AXIS ATTITUDE CONTROL DOCKED/UNDOCKED, PRE-PDI, POWERED DESCENT PRIOR TO HIGH GATE SINCE PGNS AUTO/RATE CMD AND AGS RATE CMD ARE THE ONLY ACCEPTABLE CONTROL MODES FOR PDI, LOSS OF EITHER CONSTITUTES A LOSS OF REDUNDANCY. REDUNDANCY IS MANDATORY SINCE THERE ARE MANY SINGLE FAILURES THAT CAN CAUSE LOSS OF EITHER MODE. POWERED DESCENT FROM HIGH GATE TO TOUCHDOWN AFTER HIGH GATE THE DECISION TO CONTINUE IS CREW OPTION. LANDING ENABLES THE CREW TO USE STANDARD PROCEDURES AND ALLOWS ADDITIONAL TIME TO RESOLVE THE PROBLEM. LUNAR STAY AND RENDEZVOUS ON THE LUNAR SURFACE THE LOSS OF EITHER PGNS AUTO/RATE CMD OR AGS AUTO/RATE CMD WILL BE CAUSE FOR AN ASCENT AT THE NEXT BEST OPPORTUNITY SINCE FURTHER SYSTEMS DEGRADATION CAN CAUSE LOSS OF ALL ATTITUDE CONTROL RECOMMENDED FOR ASCENT. DURING RENDEZVOUS OTHER MODES OF ATTITUDE CONTROL BECOME ACCEPTABLE AND THE MISSION CAN BE CONTINUED.

R	ITEM	
	24-29	LOSS OF TRANSLATION CAPABILITY

A. AUTOMATIC ULLAGE (+X)

AUTOMATIC ULLAGE IS CAUSED BY THE LGC ISSUING APPROPRIATE JET-ON COMMANDS TO THE PGNS ASSOCIATED CES HARDWARE. A FAILURE OF AUTOMATIC ULLAGE COULD THEREFORE BE CAUSED BY EITHER AN LGC/LGC INTERFACE OR A CES MALFUNCTION. IF AN AUTOMATIC ULLAGE FAILURE OCCURS, THE CREW WILL MANUALLY ULLAGE WITH THE +X TRANSL P.B. TO SATISFY THE CONSTRAINT OF HAVING ULLAGE TO START A DPS BURN. SINCE THE USE OF THE P.B. DOES NOT ENTAIL USING ANY AUTOMATIC ULLAGE CIRCUITS, A SINGLE FAILURE IN AUTOMATIC ULLAGE WILL NOT INHIBIT OR AFFECT THE MANUAL ULLAGE. THUS THE ULLAGE REQUIREMENT WILL BE SATISFIED. BECAUSE THE NORMALLY SHORT ULLAGE TIME (8 SECONDS) DOESN'T ALLOW FOR A SUBSTANTIAL AMOUNT OF TROUBLESHOOTING, A SECONDARY INDICATION OF FAULT IS NECESSARY TO ISOLATE THE MALFUNCTION. THAT SECONDARY INDICATION IS THE AUTOMATIC START OF THE DPS. IF THE DPS STARTS AUTOMATICALLY, THE LGC IS ASSUMED TO BE OPERATING NOMIALLY SINCE THE PROBABILITY OF CHANNEL BITS (I.E., ULLAGFLG OR A +X JET-ON COMMAND) FAILING IS EXTREMELY LOW. HOWEVER, A TEST OF REDUNDANT 3-AXIS ATTITUDE CONTROL MAY BE MADE DURING THE FTP PORTION OF PDI TO INSURE PGNS 3-AXIS ATTITUDE CONTROL. THUS, IF NECESSARY, A PGNS ASSOCIATED CES HARDWARE FAILURE WILL BE DETECTED. IF THE AUTOMATIC START DOES NOT OCCUR, A WORST CASE ASSUMPTION IS MADE (I.E., THE LGC HAS LOST ITS ABILITY TO CONTROL MAJOR FLIGHT FUNCTIONS). THUS, THIS SECONDARY FAILURE CONSTITUTES A NO-GO FOR PDI ON THE BASIS OF LGC CONTROL FAILURES.

B. 3-AXIS TRANSLATION

THREE AXIS TRANSLATION IS REQUIRED PRIOR TO CIRC TO MAINTAIN SYSTEMS INTEGRITY BECAUSE A DOUBLE FAILURE IN NECESSARY TO VIOLATE THE LM'S BASIC 3-AXIS TRANSLATION REDUNDANCY. AFTER CIRC, THE VEHICLE IS IN A SITUATION WHERE IT MUST PERFORM A RENDEZVOUS--- THEREFORE, IT IS NO EAISER TO PERFORM A RENDEZVOUS FROM THE CURRENT ORBIT THAN FROM THE LUNAR SURFACE. THUS, AFTER CIRC, CONTINUE MISSION IS THE APPROPRIATE ACTION. AFTER INSERTION, THE LM CAN PERFORM THE DIRECT RENDEZVOUS AS LONG AS IT CAN PERFORM THE TWEAK BURN AND TPI. TO DO THIS, THE LM MUST HAVE X TRANSLATION CAPABILITY. FOR TPF, IT IS NECESSARY THAT THE CREW EVALUATE THE LOSS OF TRANSLATION IN REAL TIME, THUS, THE ACTION IS TO CONTINUE MISSION.

R	ITEM	
	24-30	LOSS OF PITCH OR ROLL GDA THE LOSS OF PITCH OR ROLL GDA (THRUST VECTOR CONTROL) WOULD CAUSE AN ABORT ONLY IF EXCESSIVE IMPINGEMENT OR LOSS OF ATTITUDE CONTROL COULD RESULT.
	24-31	LOSS OF REDUNDANT ASCENT ENGINE ON CAPABILITY A REDUNDANT METHOD OF MAINTAINING THE ASCENT ENGINE ON IS NECESSARY TO INSURE CREW SAFETY. THE TWO METHODS WHICH CONSTITUTE THE NECESSARY REDUNDANCY ARE AUTO START AND ENGINE START OVERRIDE. IF A FAILURE OCCURS AFFECTING EITHER METHOD AND IF THERE IS AVAILABLE TIME, TROUBLE SHOOTING PROCEDURES WILL BE IMPLEMENTED TO DETERMINE APS START REDUNDANCY. PRIOR TO PDI THE CONFIRMED LOSS OF EITHER METHOD IS SUFFICIENT TO NO-GO PDI. IF THE LOSS OF REDUNDANT ASCENT ENGINE ON OCCURS DURING PDI, DIFFERENT ACTIONS ARE REQUIRED DEPENDING ON WHETHER OR NOT DECENT INSERTION CAPABILITY EXISTS (REFERENCE MR 25-2). WHEN DESCENT INSERTION CAPABILITY EXISTS, THE LOSS OF EITHER METHOD WILL BE CAUSE FOR AN ABORT. IF EITHER IS LOST AFTER DESCENT INSERTION CAPABILITY, THE ACTION WILL BE TO CONTINUE THE MISSION BECAUSE IT WOULD BE DIFFICULT TO IMPLEMENT CORRECTIVE PROCEDURES DURING THIS TIME OF HIGH CREW ACTIVITY. IF THE LOSS OF EITHER IS CONFIRMED AFTER LANDING, THE LM WILL BE NO-GO FOR AN EXTENDED LUNAR STAY. LIFTOFF AT NEXT BEST OPPORTUNITY IS THEN THE DESIRED ACTION.
	24-32	LOSS OF DPS AUTO ON CAPABILITY IF DPS AUTO ON CAPABILITY IS LOST, THE REQUIRED ACTION IS DEPENDENT UPON WHETHER OR NOT AUTOMATIC ULLAGE HAS OCCURREO. THIS CONSTRAINT AGAINST THE DPS AUTO ON WAS LEVIED TO ALLOW A SECONDARY INDICATION OF THE LGC'S ABILITY TO CONTROL MAJOR FLIGHT FUNCTIONS. IF ULLAGE HAD OCCURRED AUTOMATICALLY AND THE DPS AUTO ON CAPABILITY WAS LOST, THE USE OF THE ENGINE START P.B. WOULD BECOME MANDATORY. THIS IS BECAUSE IT IS NECESSARY TO FIRE THE SUPERCRITICAL HELIUM SQUIBS WHICH WHEN BLOWN WILL ALLOW FOR NOMINAL MISSION COMPLETION. IF IGNITION NOW OCCURS, THE DESCENT ENGINE COMMAND OVERRIDE SWITCH SHOULD BE PLACED ON BECAUSE OF SINGLE POINT FAILURES IN THE START PUSH BUTTON CIRCUITRY. IF IGNITION DOESN'T OCCUR WITH START P.B. DEPRESSION, THEN THE SHE SQUIBS MAY NOT HAVE BEEN BLOWN. IF THE DPS WERE TO BE SUBSEQUENTLY STARTED (VIA THE DSC END CMD OVRD) WITH THE LOSS OF SHE, POI WOULD BE ABORTED. THUS A PERIOD OF TROUBLESHOOTING (1 REV) IS NECESSARY TO DETERMINE WHETHER OR NOT THE CAPABILITY EXISTS TO SUCCESSFULLY BLOW SHE SQUIBS AND IGNITE THE DPS. HOWEVER, IF ULLAGE HAD NOT OCCURRED AUTOMATICALLY, AND THE OPS AUTO ON CAPABILITY WAS LOST, THE ACTION WOULD BE TO INHIBIT POI SINCE TWO MAJOR FLIGHT FUNCTIONS MAY NOT HAVE BEEN PERFORMED BY THE LGC. THUS, PDI IS NO-GO BECAUSE OF A SUSPECTED LGC FAILURE.

R	ITEM

24-34 LOSS OF AUTO/MANUAL THROTTLE CONTROL

A. EITHER

THE LOSS OF AUTO THROTTLE WILL NOT NO-GO PDI SINCE IT IS POSSIBLE TO MONITOR VIA DSKY READOUT GUIDANCE THRUST COMMANDS. SIMULATIONS HAVE SHOWN THAT THE CREW CAN FOLLOW WITH MANUAL THROTTLE CONTROL THE APPROPRIATE THROTTLE SCHEDULE DISPLAYED ON THE DSKY.

NOMINALLY, MANUAL THROTTLE IS USED TO SUPPLEMENT/BACKUP AUTO THROTTLE. DPS MAX THRUST CAN BE ACHIEVED BY EITHER A FULL SCALE OUTPUT OF AUTO THROTTLE AND A PERCENTAGE OUTPUT OF MANUAL THROTTLE OR A FULL SCALE OUTPUT OF MANUAL THROTTLE. SINCE MAX THRUST FROM THE DPS IS A NECESSARY REQUIREMENT FOR BOTH THE NOMINAL PDI TRAJECTORY AND NEAR LUNAR SURFACE ABORTS, A MEANS OF ACHIEVING MAX THRUST IS MANDATORY.

THE LOSS OF MANUAL THROTTLE REQUIRES A CONTINUE MISSION RULING BECAUSE A WORK-AROUND PROCEDURE EXISTS TO FORCE THE DPS TO MAX THRUST REGARDLESS OF THE MANUAL THROTTLE OUTPUT. THUS THE NECESSITY OF REQUIRING MANUAL THROTTLE HAS BEEN REMOVED.

AN EXAMPLE OF HOW THE PROCEDURE IS IMPLEMENTED WILL CLARIFY ITS USE. IF MANUAL THROTTLE IS LOST PRIOR TO OR DURING PDI, THE DECA POWER CB ON PANEL 11 WILL BE PULLED WHEN MAX THRUST IS NECESSARY. WHEN GTC IS BELOW 57 PERCENT, THE CB WILL BE RESET TO ALLOW THE LGC TO CONTROL THE THROTTLE. WITH THE CB PULLED, GROUND MONITORING OF CERTAIN PARAMETERS IS LOST BUT THE LOSS DOES NOT COMPRIMIZE FAILURE DETECTION TECHNIQUES IN THIS TIME FRAME.

THUS, THE LOSS OF EITHER THROTTLE CONSTITUTES A CONTINUE MISSION RULING ON THE BASIS THAT BACKUP TECHNIQUES FOR EACH ARE AVAILABLE.

B. BOTH

THE LOSS OF BOTH THROTTLES WILL BE CAUSE FOR AN ABORT DURING PDI SINCE THE PDI TRAJECTORY REQUIRES THAT THE DPS BE THROTTLED TO MEET ALTITUDE AND ALTITUDE RATE CONSTRAINTS. IF THE CONFIRMED LOSS OF BOTH IS DETECTED ANYTIME PRIOR TO PDI, THE ACTION WILL BE TO RETURN TO THE CSM SINCE A LUNAR LANDING CANNOT BE ACCOMPLISHED.

24-36 LOSS OF LUNAR CONTACT LIGHTS

THE FUNCTION OF THE LUNAR CONTACT LIGHT IS TO CUE THE CREW WHEN TO HIT THE STOP PUSH BUTTON PRIOR TO TOUCHDOWN. IF THE LUNAR CONTACT LIGHTS WERE LOST, THE CREW WOULD CONTINUE THE MISSION USING VISUAL REFERENCE AS THE PRIMARY SHUTDOWN CUE AND THE OTHER ONBOARD CREW DISPLAYS AS SECONDARY CUES.

R	ITEM	

LM PROPULSION-DPS

THE FOLLOWING LM DPS PROPULSION MISSION RULES RATIONALE ATTEMPTS TO EXPLAIN THE BACKGROUND BEHIND EACH MISSION RULE. SINCE THE FIRST RULE IN EACH SECTION IS A REPETITION OF THE LM CONTROL GO/NO-GO'S IN SECTION 3 (REF PAGE 3-23), THE RATIONALES BELOW ALSO COVER THE GO/NO-GO'S. IN GENERAL THE OVERALL PHILOSOPHY IS TO IDENTIFY THE EQUIPMENT ABSOLUTELY ESSENTIAL TO COMPLETE THE NORMAL LUNAR MISSION AND AT EACH PHASE SPECIFY THAT EQUIPMENT REQUIRED FROM THAT POINT THROUGH REDOCKING. IN ADDITION, OTHER EQUIPMENT IS ALSO REQUIRED TO PROVIDE REDUNDANCY FOR CREW SAFETY PURPOSES, THIS IS PRIMARILY ASSOCIATED WITH REDUNDANT CAPABILITY FOR MAINTAINING DPS IGNITION. DURING THE END OF THE POWER DESCENT PHASE AT SOME PERIOD JUST PRIOR TO TOUCHDOWN IT BECOMES MORE DANGEROUS TO ABORT THAN TO MANUALLY LAND, AND THEN DO A NOMINAL LIFTOFF. THIS IS BECAUSE THE NOMINAL LIFTOFF IS MORE THOROUGHLY EXERCISED DURING PREMISSION SIMULATIONS AND INVOLVES LESS UNKNOWNS BOTH FROM A STANDPOINT OF SOFTWARE CHECKOUT AND CREW PROCEDURES. DURING THE LUNAR STAY, THERE ARE OPTIMUM TIMES FOR LIFTOFF WHERE THE CSM POSITION IS ALIGNED FOR EASY RENDEZVOUS. ABORTS DURING LUNAR STAY WILL BE DELAYED TO LIFTOFF AT THESE OPTIMUM TIMES, EXCEPT IN CASES WHERE CAPABILITY TO ACHIEVE ASCENT IS JEOPARDIZED.

25-2 DEFINITIONS

A. OPERATIONAL DPS

1. THIS MINIMUM INLET PRESSURE ASSURES THAT SYSTEM PRESSURIZATION VIA THE SHE WILL OCCUR QUICKLY ENOUGH TO OPEN PROPELLANT BALL VALVES AND ALLOW PROPELLANT FLOW PRIOR TO THE SHE FLOW FREEZING THE FUEL IN THE FUEL-HELIUM HEAT EXCHANGER.

2. IF ENGINE INLET LOWER PRESSURE LIMITS ARE VIOLATED, EXTREME COMBUSTION ROUGHNESS CAN RESULT. ROUGH COMBUSTION GIVES RISE TO SEVERE CHAMBER PRESSURE SPIKES, HIGH TRANSIENT ACCELERATIONS, AND ABNORMAL ENGINE STRESSES WHICH COULD CAUSE ENGINE DAMAGE.

3. THE ENGINE SHOULD NOT BE STARTED AND OPERATED AT PROPELLANT BULK TEMPERATURES OUTSIDE THE 50 DEG F TO 90 DEG F RANGE. A BULK TEMP GREATER THAN 50 DEG F IN THE PROPELLANT TANKS INSURES THAT PROPELLANT IN THE LINES DOWNSTREAM OF THE TANKS REMAINS ABOVE 40 DEG F. THE TEMP OF 40 DEG F REPRESENTS THE LOWER LIMIT OF THE ENGINE INJECTOR QUALIFICATION ENVELOPE, AND EFFECTS OF OPERATION OUTSIDE THIS ENVELOPE ARE UNKNOWN. FOR BULK TEMPS GREATER THAN 90 DEG F PERFORMANCE DEGRADATION AND HIGH EROSION WITH POSSIBLE ENGINE BURN-THROUGH MAY OCCUR.

4. DELTA TEMPERATURE GREATER THAN 10 DEG F CAUSES DEGRADED PERFORMANCE WHICH RESULTS IN OFF-NOMINAL MIXTURE RATIO AND LOWER SPECIFIC IMPULSE WHICH COULD CAUSE PROPELLANT DEPLETION PRIOR TO LANDING. IN ADDITION, A DELTA T GREATER THAN 25 DEG F MAY PRODUCE HIGH EROSION RATES AND A POSSIBLE PREMATURE CHAMBER BURN-THROUGH. THE TEMPERATURE LIMITS ARE ONLY TO INITIATE A BURN BECAUSE IT IS NOT REASONABLE FOR BULK TEMPERATURES TO CHANGE DURING A BURN--THEREFORE, ANY SIGNIFICANT SHIFT IN TEMPERATURES DURING A BURN WILL BE CONSIDERED A TM FAILURE.

5.(A) DELTA PRESSURE BETWEEN FUEL AND OXID ENGINE INLET PRESSURES CREATES OFF-NOMINAL PROPELLANT FLOW RATES. OXID-HIGH FLOW RATES CAUSE HIGH EROSION RATES AND POSSIBLE PREMATURE CHAMBER BURN-THROUGH. FUEL-HIGH FLOW RATES CAUSE ROUGH COMBUSTION. IN BOTH CASES DEGRADED PERFORMANCE AND IMPROPER PROPELLANT UTILIZATION RESULTS.

(B) IF THE DELTA PRESSURE AT THE START OF ANY BURN IS GREATER THAN 50 PSID (FUEL HIGH), THE FUEL LEAD INTO THE COMBUSTION CHAMBER MAY BE LARGE ENOUGH TO ALLOW THE FUEL TO ENTER INTO THE OXID ORIFICES AND CAUSE DETONATION OF PROPELLANTS IN THE INJECTOR WHICH COULD DAMAGE THE INJECTOR.

6. SUFFICIENT SUPERCRITICAL HELIUM MUST EXIST TO ALLOW PROPELLANT DEPLETION WITHOUT EXCEEDING THE MINIMUM FTP INLET PRESSURE LIMIT.

B. LOW THROTTLE POINT

THE EXACT LOW THROTTLE POINT IS DEFINED FOR INFORMATION PURPOSES AS IT CHANGES SLIGHTLY FROM VEHICLE TO VEHICLE. (REFERENCE SODB VOL II APPENDIX)

C. DPS INSERTION CAPABILITY - NO RATIONALE REQUIRED.

R	ITEM

25-11 MINIMUM DPS ENGINE BURN TIME AND RESTART CAPABILITY

A MINIMUM BURN OF 3.5 SECONDS IS REQUIRED TO ASSURE THAT COMBUSTION CHAMBER HEATING IS ENOUGH TO PREVENT FREEZING OF PROPELLANTS IN INJECTOR MANIFOLDS WHICH COULD CAUSE UNPREDICATABLE AND UNREPEATABLE SYSTEM OPERATION. AFTER A MINIMUM BURN, A COAST PERIOD OF 2 SECONDS IS THEN REQUIRED TO ASSURE THAT SOAK-BACK EFFECTS HAVE CAUSED COMPLETE SUBLIMATION OF PROPELLANTS IN THE INJECTOR.

25-14 SUPERCRITICAL HELIUM BURST DISC RUPTURE DURING MANNED OPERATION IS AN ALLOWABLE EVENT

THE SUPERCRITICAL HELIUM PRESSURE RELIEF ASSEMBLY IS DESIGNED TO RELIEVE THE SHE TANK TO ZERO IF THE STORAGE TANK PRESSURE BECOMES EXCESSIVE WITHOUT CAUSING STRUCTURAL DAMAGE TO THE SPACECRAFT, PRODUCING TOO LARGE A MOMENT UNBALANCE, OR ENDANGERING THE CREW.

25-15 PROPELLANT GAGING

THE PQGS IS THE MOST ACCURATE METHOD OF GAGING DPS PROPELLANT WHICH IS AVAILABLE TO THE CREW.

A. THE PQGS ONBOARD ERROR IS DEFINED AS 1.3 PERCENT FROM 95 PERCENT TO 25 PERCENT, 1 PERCENT FROM 25 PERCENT TO 8 PERCENT, AND 1.3 PERCENT FROM 8 PERCENT TO 0 PERCENT.

   SINCE THE GREATEST RANGE OF THE PQGS AS WELL AS THE MOST CRITICAL (8 PERCENT -0) HAS AN ERROR OF 1.3 PERCENT, THIS IS THE ERROR ESTABLISHED FOR MISSION RULE USE.

B. THE BACKUP METHOD UTILIZES THE LGC MASS IN ITS CALCULATION. THIS METHOD CAN DETERMINE TOTAL PROPELLANT REMAINING VERY ACCURATELY (1 PERCENT) A NOMINAL MIXTURE RATIO IS ASSUMED WHEN CALCULATING THE OXIDIZER AND THE FUEL INDIVIDUALLY, WHICH RESULTS IN A LARGER ERROR (3 PERCENT).

25-16 FRACTURE MECHANICS

WHEN DESCENT STAGE RETENTION IS DESIRABLE AFTER A LONG BURN, THE FRACTURE MECHANICS REQUIREMENTS ON THE DESCENT PROPELLANT TANKS MUST BE SATISFIED. A BURN THAT LEAVES GREATER THAN 29 PERCENT OF THE PROPELLANT PRODUCES NO FRACTURE MECHANICS PROBLEMS. FOR LONGER BURNS PLACING THE ENGINE IN A BLOWDOWN MODE AT 29 PERCENT INSURES THAT FRACTURE MECHANICS LIMITS WILL NOT BE VIOLATED.

R	ITEM	
	25-30	LOSS OF OPERATIONAL DPS REFERENCE MISSION RULE RATIONALE 25-2 FOR LOSS OF OPERATIONAL DPS. AFTER LO GATE THE CREW IS TOO BUSY TO OBSERVE ANYTHING OTHER THAN ULLAGE PRESSURES, AND IF A FAILURE DID OCCUR THAT VIOLATED OTHER OPERATIONAL PARAMETERS BUT NOT ULLAGE PRESSURES, THE ENGINE COULD BE SAFELY OPERATED IN THAT MODE FOR THE SHORT TIME UNTIL LANDING.
	25-31	START TANK LEAK A. INLET PRESSURE EQUAL TO OR GREATER THAN 30 PSIA THE DPS START TANK CANNOT BE ISOLATED FROM THE DPS PRESSURIZATION SYSTEM AFTER ITS EXPLOSIVE VALVE IS OPENED. HELIUM FROM THE SHE TANK WILL FLOW BACK THROUGH THE SECONDARY REGULATOR AND LEAK OVERBOARD THROUGH THE START TANK WHEN THE SHE EXPLOSIVE VALVE IS OPENED AUTOMATICALLY 1.3 SECONDS AFTER ENGINE IGNITION. THE ENGINE CAN BE SAFELY STARTED AND OPERATED FOR 1.3 SECONDS WITHOUT PRESSURIZING FROM THE START TANK IF THE INLET PRESSURES ARE EQUAL TO OR GREATER THAN 30 PSIA. THIS WILL AVOID LOSS OF HELIUM FROM THE SHE TANK. B. INLET PRESSURE LESS THAN 30 PSIA WITH ENGINE INLET PRESSURES BELOW SPECIFIED LIMITS, THE ENGINE CANNOT BE SAFELY STARTED-- THEREFORE, THE START TANK MUST BE USED. IF A START TANK LEAK EXISTS AND THE SQUIB IS BLOWN AND THERE IS SUFFICIENT HELIUM TO BRING THE ULLAGE PRESSURE TO EQUAL TO OR GREATER THAN 30 PSIA, IT IS ASSUMED THAT THE LEAK IS SMALL BECAUSE ENOUGH PRESSURE IN THE START TANK REMAINED TO PARTIALLY PRESSURIZE THE DPS, AND POWERED DESCENT WILL BE ATTEMPTED (REF MRR 26-33).
	25-33	LOSS OF SUPERCRITICAL PRESSURE DURING POWERED DESCENT IF SUPERCRITICAL HELIUM PRESSURE IS LOST PRIOR TO 31 PERCENT PROPELLANT REMAINING THE DPS ENGINE WILL BE BELOW ITS MINIMUM FTP INLET PRESSURE PRIOR TO PROPELLANT DEPLETION. IF THE DPS GOES INTO BLOWDOWN BELOW 31 PERCENT PROPELLANT REMAINING, THE CAPABILITY TO GO TO FTP AT ANY POINT AND DEPLETE PROPELLANTS EXISTS. THIS ASSURES AN FTP ABORT AY ANY TIME DURING THE LUNAR LANDING.

R	ITEM	
	25-34	DPS HELIUM LEAK A DPS HELIUM LEAK PRIOR TO PDI WILL BE EVALUATED BY THE GROUND. IF THE HELIUM LEAK ALLOWS A LOSS OF LESS THAN 12 LBS. THEN PDI CAN BE COMPLETED WITHOUT VIOLATING MR 25-2 FOR AN OPERATIONAL DPS. IF MORE THAN 12 LBS OF HELIUM WILL BE LOST THEN PDI WILL NOT BE ATTEMPTED.
	25-36	97 SECONDS AFTER LO LEVEL AT LO LEVEL ACTIVATION, THE GROUND ASSUMES THAT 117 SECONDS AT 25.4 PERCENT THRUST REMAINS. THE 113 SECONDS IS DERIVED FROM RSSING THE 3 SIGMA LOW LEVEL POINT FOR EACH TANK WITH THE OTHER FUEL TANK. THE SAME IS DONE FOR THE OXIDIZER TANKS, AND THE LOWEST OF THE FUEL AND OX RSSED NUMBER IS USED. THIS ASSUMES THAT IT IS HIGHLY IMPROBABLE THAT BOTH FUEL LOW LEVELS OR OX LOW LEVELS WOULD BE AT THEIR 3 SIGMA MINIMUM. AT LEAST ONE LOW LEVEL OUT OF EACH PAIR SHOULD BE AT THEIR RSSED LOW LEVEL POINT. NINETY-SEVEN SECONDS AFTER A LOW LEVEL, APPROXIMATELY 20 SECONDS OF HOVER TIME OR FIVE SECONDS OF FTP REMAIN. THEREFORE, AT 97 SECONDS, THE CREW FACES AN ABORT/NO ABORT DECISION. THEY MUST HAVE EITHER THE CAPABILITY TO LAND WITHIN 20 SECONDS OR THEY MUST ABORT, IN WHICH CASE THEY HAVE FIVE SECONDS AT FTP TO COVER ANY ABORT SITUATION SUFFICIENTLY.
	25-37	LOW LEVEL CONFIRMS INSUFFICIENT PROPELLANT TO LAND IF IN THE CREW'S ESTIMATION INSUFFICIENT PROPELLANT REMAINS TO LAND WHEN THE LOW LEVEL INDICATION IS OBTAINED, THEN AN ABORT WITH AN ABORT STAGE 20 SECONDS LATER SHOULD BE INITIATED. THIS WILL ALLOW MAXIMUM USE OF THE DESCENT ENGINE WHILE AVOIDING AN FTP BURN TO DEPLETION WHICH COULD PRODUCE HAZARDOUS THRUST OSCILLATIONS. AT THE LOW LEVEL INDICATION, APPROXIMATELY 32 SECONDS OF BURN TIME REMAIN AT FTP. IN ADDITION, IF A LARGE DELTA SHOULD ARISE BETWEEN OXIDIZER AND FUEL PQGS READINGS, THIS INDICATES THAT ABNOMINAL PROPELLANT USAGE OR A PROPELLANT LEAK MAY EXIST. WHEN THE DELTA BETWEEN READINGS REACHES GREATER THAN 13 PERCENT, THE NOMINAL OXIDIZER OR FUEL PROPELLANT MARGIN PREDICTED AT LANDING HAS BEEN CONSUMED, AND THE CAPABILITY TO LAND DOES NOT EXIST EVEN CONSIDERING WORST CASE PQGS ERROR.
	25-38	PQGS READING 2 PERCENT AND NO VALID TIME ESTIMATE FROM LOW LEVEL IF THE THROTTLE IS TAKEN OVER MANUALLY OR NO VALID TIME ESTIMATE FROM LOW LEVEL IS OBTAINED, THEN THE CREW MUST ABORT WHEN PROPELLANTS GET SO LOW THAT THEY COULD RUN OUT PRIOR TO GETTING OUT OF THE APS ABORT CURVE IF AN ABORT WAS REQUIRED. UNDER THESE CIRCUMSTANCES THE PQGS, WHICH IS THE CREW'S ONLY PROPELLANT GAGING SYSTEM, BECOMES THE PRIMARY CUE OF PROPELLANT REMAINING AFTER LOW LEVEL. WHEN THE PQGS FLIPS TO 2 PERCENT, AN ABORT/NO ABORT DECISION POINT IS FACED BY THE CREW. THE PQGS READING OF 2 PERCENT MEANS THE GAGE IS REGISTERING A PROPELLANT QUANTITY BETWEEN 1.5 AND 2.5 PERCENT DEPENDING ON HOW SOON THE CREW SEES THE READING AFTER THE FLIP TO 2 PERCENT. TAKING INTO ACCOUNT PQGS ERROR IN THE LOWER RANGE OF 1 PERCENT, THE CREW CAN HAVE AN ASSURED ABORT PAD OF 0.5 TO 1.5 PERCENT WHICH CORRESPONDS TO BETWEEN 10 AND 30 SECONDS OF BURN TIME AT 25.4 PERCENT THRUST AND PROVIDES SUFFICIENT FTP BURN TIME FOR ABORT SITUATIONS.

R	ITEM	
	25-39	EXCESSIVE PROPELLANT USAGE

POWERED DESCENT SHOULD BE ABORTED WHENEVER IT BECOMES CLEAR THAT SUFFICIENT PROPELLANT DOES NOT EXIST TO LAND. PRIOR TO P64, SUFFICIENT DATA DOES NOT EXIST TO DETERMINE WHETHER EXCESSIVE PROPELLANT IS BEING USED. DURING P64, THE GROUND CAN ANALYSE LGC DATA AND DESCENT QUANTITIES TO DETERMINE WHETHER SUFFICIENT PROPELLANT REMAINS TO LAND. THIS ANALYSIS ALSO TAKES INTO ACCOUNT ANY REDESIGNATION. EXCESSIVE PROPELLANT USAGE PREDICTED BY GROUND ANALYSIS WILL BE VERIFIED BY SECONDARY CUES SUCH AS THROTTLE DOWN TIME, THRUST LEVEL TCP, AND SYSTEM PRESSURES WHICH WOULD INDICATE OFF-NOMINAL DPS PERFORMANCE. A MINIMUM PERCENTAGE OF PROPELLANT IS REQUIRED AT ALL TIMES FOR AN FTP ABORT. WHEN APPLIED TO THE PROPULSION PER CENT MARGIN PLOTS, A MINIMUM PREDICTED MARGIN NUMBER AT TOUCHDOWN IS OBTAINED BY SUBTRACTING BOTH PQGS ERROR AND MARGIN PLOT ERROR FROM THE MINIMUM PQGS NUMBERS REQUIRED FOR ALL ABORT SITUATIONS.

REQUIRED FOR FTP ABORTS	+1 PERCENT
PQGS ERROR IN 25 PERCENT TO 8 PERCENT REGION	-1 PERCENT
MARGIN PLOT ERROR	-.2 PERCENT
LOWEST ACCEPTABLE MARGIN	-.2 PERCENT

	25-40	FAILURE TO VENT DPS

VIOLATION OF THE FRACTURE MECHANICS LIMITS ON THE DPS PROPELLANT TANKS COULD CAUSE A RUPTURE OF THE TANKS CREATING A HAZARDOUS CONDITION FOR THE CREW.

FRACTURE MECHANICS LIMITS ARE ESTABLISHED ON A PRESSURE-TEMPERATURE RELATIONSHIP. THE PROPELLANT TANK TEMPERATURE WILL CHANGE ACCORDING TO THE ENGINE BURN TIME AND THE QUANTITY OF PROPELLANT REMAINING IN EACH TANK. THE PROPELLANT TANK PRESSURE WILL BE EFFECTED BY THE HEAT SOAK BACK AFTER THE BURN.

IF THE OXIDIZER TANKS ARE NOT VENTED AFTER THE BURN, A HIGH TANK PRESSURE WILL RESULT AS A FUNCTION OF HEAT SOAK BACK. AS LONG AS THERE IS AT LEAST 150 LBS IN EACH OX TANK, THE TANK TEMPERATURE INCREASE WOULD NOT BE LARGE ENOUGH TO VIOLATE THE FRACTURE MECHANICS PRESSURE TEMPERATURE RELATIONSHIP. THE PRESSURE NEEDED FOR THE TEMPERATURE RISE TO VIOLATE THE FRACTURE MECHANICS LIMITS CAN NEVER BE OBTAINED. THE PRESSURE WOULD BE RELIEVED THRU THE BURST DISC BEFORE IT COULD REACH ITS LIMITS. IF THE PROPELLANT REMAINING IN EACH OX TANK IS LESS THAN 150 LBS, IN EXCESS OF TWO HOURS IS REQUIRED FOR TEMPERATURES TO INCREASE TO A POINT SUCH THAT FRACTURE MECHANICS LIMITS MAY BE VIOLATED. THEREFORE, IT IS SAFE TO CONTINUE TO T-3, AND REAL TIME EVALUATION WILL BE MADE FOR CONTINUING AFTER T-3.

IN THE EVENT OF FAILURE OF THE FUEL TANKS TO VENT THERE IS NO PROBLEM IN VIOLATING FRACTURE MECHANICS LIMITS. NO MATTER WHAT QUANTITY OF FUEL REMAINED, THE BURST DISC WOULD BE BLOWN BEFORE ANY PRESSURE COULD SATISFY THE FRACTURE MECHANICS LIMITS.

	25-41	EROSION EFFECTS

DURING DESCENT ENGINE OPERATION, THE ABLATIVE LINER OF THE ENGINE IS BEING CONSTANTLY WORN AWAY CAUSING AN INCREASE IN ENGINE THROAT AREA. THROAT AREA INCREASE BEYOND A PREDETERMINED PERCENTAGE MAY EXCEED THE ENGINE THRUST CHAMBER HEATING AND EROSION LIMITS AND RESULT IN AN ENGINE BURN-THROUGH. THE AMOUNT OF THROAT AREA INCREASE CAN BE GAUGED BY ENGINE TCP. THIS IS IMPLEMENTED ON A GRAPH OF DPS CHAMBER PRESSURE VS PERCENT THRUST WITH A SERIES OF CURVES WHICH SHOW DIFFERENT STAGES OF EROSION. THUS, FOR A CERTAIN THRUST LEVEL A PARTICULAR TCP CAN BE OBTAINED, AND, WHEN PLOTTED ON THE GRAPH, GIVES THE STAGE OF EROSION THE ENGINE HAS OBTAINED.

R	ITEM	

LM PROPULSION-APS

THE FOLLOWING LM PROPULSION APS MISSION RULE RATIONALE ATTEMPTS TO EXPLAIN THE BACKGROUND BEHIND EACH MISSION RULE. SINCE THE FIRST RULE IN EACH SECTION IS A REPETITION OF THE LM CONTROL GO/NO-GO'S IN SECTION 3 (REF PAGE 3-23), THE RATIONALE BELOW ALSO COVER THE GO/NO-GO'S. IN GENERAL THE OVERALL PHILOSOPHY IS TO IDENTIFY THE EQUIPMENT ABSOLUTELY ESSENTIAL TO COMPLETE THE NORMAL LUNAR MISSION AND AT EACH PHASE SPECIFY THAT EQUIPMENT REQUIRED FROM THAT POINT THROUGH REDOCKING. IN ADDITION, OTHER EQUIPMENT IS ALSO REQUIRED TO PROVIDE REDUNDANCY FOR CREW SAFETY PURPOSES. THIS IS PRIMARILY ASSOCIATED WITH REDUNDANT CAPABILITY FOR SAFE ASCENT. DURING THE LUNAR STAY, THERE ARE OPTIMUM TIMES FOR LIFTOFF WHERE THE CSM POSITION IS ALGINED FOR EASY RENDEZVOUS. ABORTS DURING LUNAR STAY WILL BE DELAYED TO LIFTOFF AT THESE OPTIMUM TIMES, EXCEPT IN CASES WHERE CAPABILITY TO ACHIEVE ASCENT IS JEOPARDIZED.

26-2 DEFINITIONS

A. OPERATIONAL APS (PRE-PRESSURIZATION)

1. THIS PRE-PRESSURIZATION DELTA PRESSURE BETWEEN OXID AND FUEL ENGINE INLET PRESSURE IS THAT MAXIMUM PRESSURE THAT WILL ALLOW ABORT START PRESSURIZATION AND SAFE ENGINE START. THIS DELTA PRESSURE IS THE LIMIT OF TESTING AND MUST NOT BE EXCEEDED. DELTA PRESSURES GREATER THAN THIS PRODUCE SLOW ENGINE STARTS. DURING AN ABORT STAGE SEQUENCE, WITH A LIGHT DPS STAGE, A SLOW APS ENGINE START COULD RESULT IN THE TWO STAGES RECONTACTING.

2. DELTA TEMPERATURE GREATER THAN 10 DEG F CAUSES DEGRADED PERFORMANCE WHICH RESULTS IF OFF-NOMINAL MIXTURE PROPELLANT DEPLETION PRIOR TO INSERTION. THE TEMPERATURE RATIO AND LOWER SPECIFIC IMPULSE WHICH COULD CAUSE LIMITS ARE ONLY TO INITIATE A BURN BECAUSE IT IS NOT REASONABLE FOR BULK TEMPERATURES TO CHANGE APPRECIABLY DURING A BURN-- THEREFORE, ANY SIGNIFICANT SHIFT IN TEMPERATURES DURING A BURN WILL BE CONSIDERED A TM FAILURE.

3. ENGINE OPERATION WITH PROPELLANT BULK TEMPERATURES OUTSIDE THESE LIMITS RESULTS IN PERFORMANCE DEGRADATION. TEMPERATURES GREATER THAN 50 DEG F PREVENT PROPELLANT LINE AND ENGINE INJECTOR TEMPERATURES FROM DECREASING BELOW 40 DEG F WHICH IS THE LIMIT OF TESTING. AT PROPELLANT TEMPERATURES BELOW 50 DEG F, THRUST CHAMBER EROSION INCREASES GREATLY AND COULD RESULT IN CHAMBER BURN-THROUGH. PROPELLANT TEMPERATURES GREATER THAN 90 DEG F RESULT IN PERFORMANCE DEGRADATION.

4. IF UPPER ENGINE INLET PRESSURE LIMITS ARE VIOLATED, EXTREME COMBUSTION ROUGHNESS CAN RESULT. ROUGH COMBUSTION GIVES RISE TO SEVERE CHAMBER PRESSURE SPIKES, HIGH TRANSIENT ACCELERATIONS, AND ABNORMAL ENGINE STRESSES WHICH COULD RESULT IN ENGINE DAMAGE. PROPELLANT TANK PRESSURES LESS THAT 62 PSIA, DURING PERIODS OF ACCELERATION, COULD RESULT IN TANK BUCKLING AND SUBSEQUENT FAILURE.

5. REDUDANT PRESSURIZATION PATHS ARE REQUIRED TO PREVENT A SITUATION WHERE A SUBSEQUENT FAILURE COULD CAUSE AN INABILITY TO PRESSURIZE THE APS. ANY HELIUM LEAK MAY RESULT IN THE LOSS OF THE CAPABILITY TO PROPERLY PRESSURIZE THE APS SYSTEM. THIS WOULD REDUCE THE APS PRESSURIZATION REDUNDANCY AND COULD REDUCE THE APS TOTAL DELTA V CAPABILITY.

R	ITEM
	26-2 CONT

B. OPERATIONAL APS (POST-PRESSURIZATION)

1. SUFFICIENT HELIUM SOURCE PRESSURE, INCLUDING BLOWDOWN CAPABILITY, MUST BE AVAILABLE TO EXPEL ALL THE PROPELLANTS TO OBTAIN THE REQUIRED DELTA V.

2. APS ENGINE TESTING WITH PROPELLANT BULK DELTA TEMPS OF GREATER THAN 60 DEG F FOR BURNS OF LESS THAN 100 SECONDS IS BEYOND THE LIMIT OF TESTING EXPERIENCE. TESTING HAS PROVEN THAT BURNS OF GREATER THAN 100 SECONDS WITH MORE THAN 10 DEG F DELTA TEMPERATURE RESULTS IN SIGNFICANTLY DEGRADED PERFORMANCE AND PREMATURE PROPELLANT DEPLETION.

3. FOR SHORT APS BURNS (OF LESS THAN 100 SECONDS) THE PROPELLANT BULK TEMP WILL NOT CHANGE APPRECIABLY. ENGINE OPERATION OUTSIDE THESE TEMPERATURE LIMITS RESULTS IN OFF-NOMINAL MIXTURE RATIO, SPECIFIC IMPULSE, AND THRUST CHAMBER EROSION. THE ENGINE HAS BEEN SUCCESSFULLY TESTED FOR SHORT DURATION BURNS AT 120 DEG F. BURNS OF GREATER THAN 100 SECONDS WILL PRODUCE SIGNIFICANT EXCURSIONS IN MIXTURE RATIO, SPECIFIC IMPULSE, AND THRUST CHAMBER EROSION. THESE EXCURSIONS COULD RESULT IN PROPELLANT DEPLETION PRIOR TO THE DESIRED TIME OR RESULT IN THRUST CHAMBER FAILURE.

4. THE MINIMUM INLET PRESSURE (ULLAGE PRESSURE) INSURES THAT THE TCP REMAINS ABOVE 80 PSIA. PRESSURES BELOW THIS LEVEL RESULT IN TCP THAT PRODUCES ROUGH COMBUSTION, HIGH TRANSIENT ACCELERATIONS, AND ENGINE STRESSES.

5. DELTA PRESSURE BETWEEN FUEL AND OXIDIZER ENGINE INLET PRESSURES CREATE OFF-NOMINAL PROPELLANT FLOW RATES. OXIDIZER HIGH FLOW RATES CAUSE HIGH EROSION RATES AND POSSIBLE PREMATURE CHAMBER BURN-THROUGH. FUEL HIGH FLOW RATES CAUSE ROUGH COMBUSTION. IN BOTH CASES, DEGRADED PERFORMANCE AND IMPROPER PROPELLANT UTILIZATION RESULTS, WHICH COULD CAUSE PREMATURE PROPELLANT DEPLETION.

R	ITEM

26-13 MINIMUM IMPULSE

THE MINIMUM IMPULSE IS THE MINIMUM ON TIME THAT PRODUCES A REPEATABLE MINIMUM THRUST WITHOUT RESULTING IN DETRIMENTAL FREEZING OF PROPELLANT IN THE INJECTOR. FREEZING OF THE PROPELLANTS IN THE INJECTOR COULD RESULT IN SUBSEQUENT HARD STARTS. HARD STARTS RESULT IN SEVERE THRUST CHAMBER PRESSURE SPIKES AND TRANSIENT ACCELERATIONS WHICH COULD CAUSE ENGINE DAMAGE.

26-14 MULTIPLE BURN PROFILES

THE PROBLEM OF CERTIFYING AN APS MULTIPLE BURN PROFILE IS VERY COMPLEX. THE PRIMARY CONTRIBUTING FACTORS THAT MUST BE CONSIDERED ARE THRUST CHAMBER CHARRING, BACKWALL TEMPERATURE, AND PROPELLANT FREEZING WITHIN THE INJECTOR. THESE FACTORS ARE IMPOSED BY ENGINE DESIGN CHARACTERISTICS.

DURING A BURN, THE THRUST CHAMBER LINER MATERIAL IS CONSUMED BY ABLATION. THE RATE OF ABLATION IS GREATEST DURING A BURN START AND DURING LONG BURNS AND IS DEPENDENT UPON PREVIOUS BURNS. EXCESSIVE ABLATION REDUCES THE ENGINE LIFE TO THE POINT THAT CONTINUED ENGINE OPERATION MAY RESULT IN ENGINE FAILURE.

HIGH BACKWALL TEMPERATURE IS THE RESULT OF THE ENGINE BURNING AND TEMPERATURE TRANSFER THROUGH THE CHAMBER WALL. THIS TEMPERATURE IS GREATLY AFFECTED BY PREVIOUS BURNS AND THE COAST TIME BETWEEN BURNS. EXCESSIVE TEMPERATURE RESULTS IN INCREASED ABLATION RATE, WHICH COULD RESULT IN PREMATURE ENGINE FAILURE.

PROPELLANT FREEZING WITHIN THE ENGINE INJECTOR OCCURS AT THE END OF A BURN. THE PROPELLANT TRAPPED IN THE INJECTOR FREEZES ALMOST IMMEDIATELY AT SHUTDOWN, THEN SUBLIMATES. THE RATE OF SUBLIMATION IS DEPENDENT ON INJECTOR TEMPERATURE, WHICH IS A FUNCTION OF PREVIOUS BURN PROFILE. LACK OF A COMPLETE SUBLIMATION RESULTS IN FROZEN PROPELLANTS IN THE INJECTOR. THESE FROZEN PARTICLES MAY CAUSE SUBSEQUENT ENGINE STARTS TO BE ROUGH AND ERRATIC. SUCH STARTS MAY EXPERIENCE SEVERE THRUST CHAMBER PRESSURE SPIKES AND HIGH TRANSIENT ACCELERATIONS WHICH COULD CAUSE ENGINE DAMAGE.

IN ORDER THAT MAXIMUM SAFE APS ENGINE OPERATION CAPABILITIES BE OBTAINED, ONLY PREMISSION APS MULTIPLE BURN PROFILES MUST BE USED.

26-15 PROPELLANT GAGING

THERE IS NO ONBOARD APS PROPELLANT GAGING, BUT THE GROUND HAS TWO METHODS OF MONITORING APS PROPELLANTS. THE GROUND MASS CALCULATION METHOD IS PRIME BECAUSE IT IS MORE ACCURATE THAN THE FLOW-RATE-TIMES-TIME GROUND PROGRAM. THE GROUND MASS CALCULATION USES THE LGC MASS TO DECREMENT APS PROPELLANT. THE THREE PERCENT GROUND MASS CALCULATION ERROR COMES FROM A ONE PERCENT MASS ERROR AND A TWO PERCENT MIXTURE RATIO UNCERTAINTY.

R	ITEM	
	26-20	LOSS OF AN OPERATIONAL APS REFERENCE MISSION RULE RATIONALE 26-2 FOR THE DEFINITION OF AN OPERATIONAL APS. PRIOR TO OR DURING DESCENT, THE LOSS OF AN OPERATIONAL SYSTEM REQUIRES AN IMMEDIATE ABORT AND RETURN TO THE CSM. CONTINUATION OF THE DESCENT WITHOUT A GOOD APS SYSTEM WOULD RESULT IN THE INABILITY TO ASCEND FROM THE LUNAR SURFACE. IF THE SYSTEM BEGINS TO DEGRADE AFTER LANDING, THE ASCENT MUST BE INITIATED AT THE NEXT BEST OPPORTUNITY. THIS WILL INSURE MAXIMUM PERFORMANCE FROM THE APS SYSTEM.
	26-21	APS HE SOURCE PRESSURE A SAFE ASCENT CAN BE ACCOMPLISHED ON ONE HELIUM BOTTLE BUT A SUBSEQUENT LEAK IN THE SECOND SOURCE BOTTLE MAY PREVENT INSERTION. WHENEVER THE MISSION IS ABORTED FOR A LEAK IN ONE HELIUM BOTTLE AND THE ASCENT ENGINE IS REQUIRED, THE FOLLOWING PROCEDURE SHOULD BE USED TO MORE EFFICIENTLY OPTIMIZE THE USE OF THE APS HELIUM--- SELECT AND PRESSURIZE THE APS WITH THE GOOD BOTTLE. UTILIZE THE APS WITH THE ONE BOTTLE UNTIL THE SYSTEM GOES IN BLOWDOWN WHICH OCCURS WHEN THE ULLAGE PRESSURE REACHES 160 PSIA. THE SECOND BOTTLE (THE LEAKING BOTTLE) SHOULD BE SELECTED AT THIS TIME IF IT CONTAINS SUFFICIENT PRESSURE TO AID IN PRESSURIZING THE SYSTEM WHICH IS DEFINED AS HAVING A PRESSURE GREATER THAN THE PRESSURE REMAINING IN THE FIRST BOTTLE. THIS PROCEDURE IS UTILIZED TO PREVENT EXPOSING THE GOOD HELIUM TANK TO THE LEAKING TANK UNTIL ALL APPRECIABLE HELIUM IS USED OUT OF THE GOOD HELIUM TANK. THE SECOND (LEAKING) BOTTLE SHOULD BE USED IF ANY HELIUM IS REMAINING, TO KEEP THE OPERATION AS CLOSE TO NOMINAL AS POSSIBLE SINCE ONLY LIMITED TESTING HAS BEEN DONE IN ONE BOTTLE BLOWDOWN. AFTER PRESSURIZATION, THE HELIUM TANKS ARE MANIFOLDED TOGETHER AND A LEAK IN EITHER TANK JEOPARDIZES SAFE ASCENT. BECAUSE OF THIS, ASCENT MUST BE INITIATED IMMEDIATELY. WHENEVER THE APS CAPABILITY HAS BEEN REDUCED BY LOSS OF HELIUM PRESSURIZATION, THE ASC FEEL VALVES MUST NOT BE OPENED. THIS IS TO PROVIDE ADDITIONAL APS PROPELLANT NORMALLY USED BY THE RCS TO INCREASE THE INSERTION DELTA V CAPABILITY. THE APS USES THIS ADDITIONAL PROPELLANT MORE EFFICIENTLY THAN THE RCS TO PROVIDE ADDITIONAL DELTA V CAPABILITY.
	26-22	APS HE BETWEEN QUAD CHECK VALVES AND ACS HE REG 1 AND 2 SHUTOFF VALVES A LEAK IN THIS PART OF THE PLUMBING COULD PREVENT FULL APS DELTA V CAPABILITY IF THE LEAK RATE IS SUFFICIENT TO PREVENT COMPLETE EXPULSION OF THE PROPELLANTS. PRIOR TO POWERED DESCENT, THE MISSION SHOULD BE ABORTED SO THAT CREW SAFETY IS NOT JEOPARDIZED. ONCE POWERED DESCENT HAS BEEN INITIATED, THE SAFEST APPROACH IS TO ABORT ON THE DPS AS LONG AS POSSIBLE. SHOULD THIS FAILURE OCCUR ON THE LUNAR SURFACE, A SUBSEQUENT FAILURE COULD PREVENT A SAFE INSERTION. ASCENT SHOULD BE ACCOMPLISHED AT THE NEXT BEST OPPORTUNITY. DURING RENDEZVOUS, THE APS HAS SUFFICIENT BLOWDOWN CAPABILITY TO CONTINUE THE MISSION. WHENEVER THIS FAILURE OCCURS, THE APS HELIUM SHOULD BE OPTIMIZED TO MINIMIZE THE EFFECTS OF THE LEAK. THE APS HELIUM OPTIMIZATION PROCEDURE IS FOUND IN THE AOH VOL II. THIS PROCEDURE UTILIZES THE FACT THAT HELIUM IS CONTINUOUSLY LOST ONLY WHILE THE LEAK IS BEING SUPPLIED WITH HELIUM. BY MINIMIZING THE TIME THE LEAK IS BEING SUPPLIED, THE AMOUNT OF HELIUM LOST CAN BE MINIMIZED. THIS IS ACHIEVED BY CYCLING THE REGULATORS SHUT-OFF VALVES TO PUT THE APS IN PERIODS OF BLOWDOWN OPERATION. NO HELIUM IS LOST DURING THESE BLOWDOWN PERIODS BECAUSE THE PROPELLANT TANKS ARE ISOLATED BY QUAD CHECK VALVES. WHENEVER THE APS CAPABILITY HAS BEEN REDUCED BY LOSS OF HELIUM PRESSURIZATION, THE ASC FEED VALVES MUST NOT BE OPENED. THIS IS TO PROVIDE ADDITIONAL APS PROPELLANT NORMALLY USED BY THE RCS TO INCREASE THE INSERTION DELTA V CAPABILITY. THE APS USES THIS ADDITIONAL PROPELLANT MORE EFFICIENTLY THAN THE RCS TO PROVIDE ADDITIONAL DELTA V CAPABILITY.

R	ITEM	
	26-23	PROPELLANT LEAKS ANY LOSS OF PROPELLANT REDUCES THE TOTAL DELTA V CAPABILITY OF THE APS-- THEREFORE, WHEN A LEAK EXISTS, THE MISSION SHOULD BE ABORTED IMMEDIATELY. PRIOR TO CIRC, THE LM MUST RETURN TO THE CSM. DURING THE DESCENT PHASE, THE DPS SHOULD BE USED FOR AN IMMEDIATE ABORT AND SHOULD BE USED AS LONG AS POSSIBLE (BECAUSE OF POSSIBLE LOSS OF APS DELTA V CAPABILITY). DURING LUNAR STAY, AN ASCENT SHOULD BE INITIATED IMMEDIATELY BECAUSE A PROPELLANT LEAK DECREASES DELTA V CAPABILITY AND ENDANGERS SAFE ASCENT. THE ASC FEED VALVES MUST NOT BE OPENED. THIS PROVIDES ADDITIONAL APS PROPELLANT, NORMALLY USED BY THE RCS, TO INCREASE THE INSERTION DELTA V CAPABILITY. DURING RENDEZVOUS, THE APS SHOULD NOT BE USED FOR TPI BECAUSE OF THE LACK OF KNOWLEDGE OF THE PROPELLANT REMAINING.
	26-24	APS PROP VALVE MISMATCH THERE ARE TWO SETS OF PROPELLANT SHUTOFF VALVES, A AND B, IN A PARALLEL SERIES ARRANGEMENT. THIS INSURES THE CAPABILITY TO SHUT OFF PROPELLANT TO THE ENGINE. AN INDICATION OF A MISMATCH DURING COAST PRIOR TO THE FIRST APS BURN WOULD BE CONSIDERED AS A TM FAILURE DUE TO THE MECHANICAL LINKAGE AND HIGH RELIABILITY OF THE ACTUATOR SYSTEM. A MISMATCH AT THE END OF AN APS BURN WOULD BE AN INDICATION OF AN ACTUAL FAILURE OF PARALLEL PAIR OF VALVES TO CLOSE. THE ENGINE SHOULD NOT BE RESTARTED IN THIS SITUATION SINCE FAILURE OF THE REMAINING PAIR TO CLOSE WOULD RESULT IN FAILURE TO SHUT DOWN THE ENGINE.
	26-25	APS FU AND/OR OXID LOW LEVEL A VALID LOW LEVEL INDICATES THAT APPROXIMATELY 8 SECONDS OF BURN TIME REMAINS WITH THE APS ENGINE. ASCENT FEED OPERATION SHOULD, THEREFORE, BE TERMINATED DURING ASCENT BECAUSE OF POSSIBLE HELIUM INGESTION INTO THE RCS JETS, WHICH COULD CAUSE JET FAILURE. IF A VALID APS LOW LEVEL CONFIRMS INSUFFICIENT PROPELLANT FOR AN APS TPI, RCS SHOULD BE USED FOR TPI. IT IS NOT ADVISABLE TO KNOWINGLY START AN APS TPI BURN WHICH WILL BURN TO DEPLETION.

R	ITEM

LM REACTION CONTROL

THE FOLLOWING LM RCS MISSION RULES RATIONALE ATTEMPTS TO EXPLAIN THE BACKGROUND BEHIND EACH MISSION RULE. SINCE THE FIRST RULE IN EACH SECTION IS A REPETITION OF THE LM CONTROL GO/NO-GO'S IN SECTION 3 (REF PAGE 3-23), THE RATIONALE BELOW ALSO COVER THE GO/NO-GO'S. IN GENERAL THE OVERALL PHILOSOPHY IS TO IDENTIFY THE EQUIPMENT ABSOLUTELY ESSENTIAL TO COMPLETE THE NORMAL LUNAR MISSION AND AT EACH PHASE SPECIFY THAT EQUIPMENT REQUIRED FROM THAT POINT THROUGH REDOCKING. IN ADDITION, OTHER EQUIPMENT IS ALSO REQUIRED TO PROVIDE REDUNDANCY FOR CREW SAFETY PURPOSES. THIS IS PRIMARILY ASSOCIATED WITH REDUNDANT CAPABILITY FOR ASCENT. DURING THE END OF THE POWER DESCENT PHASE AT SOME PERIOD JUST PRIOR TO TOUCHDOWN, IT BECOMES MORE DANGEROUS TO ABORT THAN TO LAND, AND THEN DO A NOMINAL LIFTOFF. THIS IS BECAUSE THE NOMINAL LIFTOFF IS MORE THOROUGHLY EXERCISED DURING PREMISSION SIMULATIONS AND INVOLVES LESS UNKNOWNS BOTH FROM A STANDPOINT OF SOFTWARE CHECKOUT AND CREW PROCEDURES. DURING THE LUNAR STAY, THERE ARE OPTIMUM TIMES FOR LIFTOFF WHERE THE CSM POSITION IS ALIGNED FOR EASY RENDEZVOUS. ABORTS DURING LUNAR STAY WILL BE DELAYED TO LIFTOFF AT THESE OPTIMUM TIMES EXCEPT IN CASES WHERE CAPABILITY TO ACHIEVE ASCENT IS JEOPARDIZED.

27-2 DEFINITIONS

A. OPERATIONAL RCS SYSTEM

1. THIS DEFINITION DEFINES THE PLUMBING OF AN RCS SYSTEM FOR USE AS A MISSION RULE REFERENCE.

2. IF ENGINE INLET LOWER PRESSURE LIMITS ARE VIOLATED, EXTREME COMBUSTION ROUGHNESS AND MIXTURE RATIO SHIFTS CAN RESULT. ROUGH COMBUSTION GIVES RISE TO SEVERE CHAMBER PRESSURE SPIKES, HIGH TRANSIENT ACCELERATIONS, AND ABNORMAL ENGINE STRESSES WHICH COULD CAUSE ENGINE DAMAGE. MIXTURE RATIO SHIFTS RESULT IN IMPROPER PROPELLANT UTILIZATION.

3. ENGINE PERFORMANCE OUTSIDE PROPELLANT TEMPERATURE LIMITS SPECIFIED IS UNKNOWN DUE TO LIMITS OF TESTING.

4. PULSE FIRING OF THE RCS JETS WITHOUT PROPERLY HEATING UP OF THE RCS QUADS CAN RESULT IN PROPELLANT FREEZING WHICH CAN CAUSE A THRUSTER FAILURE. ONCE HEATED UP, IF THE QUAD TEMPERATURE DROPS BELOW ITS PRESCRIBED LIMIT A RESIDUE CAN FORM INSIDE THE THRUSTER. IF THE RCS JET IS THEN FIRED AT A PARTICULAR DUTY CYCLE WITH THIS RESIDUE PRESENT THEN DETONATION OF THE RESIDUE CAN OCCUR.

R	ITEM	
	27-11	USABLE RCS PROPELLANT IS 548.9 LBS OR 86.7 PERCENT OF TOTAL LOADED USABLE RCS PROPELLANT IS DEFINED AS THAT PROPELLANT WHICH CAN BE GUARANTEED TO PRODUCE IMPULSE. THIS USABLE NUMBER IS OBTAINED BY SUBTRACTING TRAPPED PROPELLANT, LEADING ERROR, AND PROGRAM ERROR FROM TOTAL RCS PROPELLANT LOADED. TRAPPED PROPELLANT AND LOADING ERROR ARE FOUND IN THE SODB, AND PROGRAM ERROR IS BASED ON THE RCS GROUND PV PROGRAM WHICH HAS AN ACCURACY OF 6 PERCENT OF TOTAL LOADED.
	27-12	PROPELLANT GAGING THE PRIME GAGING METHOD FOR THE RCS SYSTEM IS THE GROUND RCS PROGRAM WHICH HAS AN ACCURACY OF 6 PERCENT. THE BACKUP METHOD IS THE GROUND READOUT OF THE PQMD WITH AN ACCURACY OF 10 PERCENT. BOTH PROGRAMS ARE SIMILAR, BUT THE RCS GROUND PROGRAM TAKES INTO ACCOUNT SUCH ADDITIONAL PARAMETERS AS OFF-NOMINAL HELIUM OR PROPELLANT LOADING AND MIXTURE RATIO CHANGES WHICH WOULD CAUSE THE PQMD TO BE IN ERROR.

R	ITEM

27-20 LOSS OF RCS SYSTEM A OR B

DURING ALL PHASES OF THE MISSION BOTH RCS SYSTEMS A AND B ARE REQUIRED TO PROVIDE ATTITUDE CONTROL AND TRANSLATION ABILITY. IF ONE SYSTEM IS LOST THEN REDUNDANCY IS LOST, AND ANY OF A MULTITUDE OF SYSTEM FAILURES CAN RESULT IN THE LOSS OF THE OTHER SYSTEM. FAILURE OF BOTH SYSTEMS WILL RESULT IN THE TOTAL LOSS OF ATTITUDE CONTROL AND TRANSLATION CAPABILITY WHICH WOULD BE CATASTROPHIC TO THE SPACECRAFT. IF THE PROBLEM DEVELOPS ON THE LUNAR SURFACE, ASCENT SHOULD COME AT THE NEXT BEST OPPORTUNITY IN ORDER TO GUARANTEE A SAFE RENDEZVOUS.

27-21 RCS THRUSTER PAIR

IN ORDER TO HAVE AN RCS THRUSTER PAIR ISOLATED A PROPELLANT LEAK DOWNSTREAM OF THE TCA ISOLATION VALVES MUST HAVE OCCURRED. FAILED-ON JETS AND FAILED-OFF JETS ARE ISOLATED ELECTRICALLY AND WOULD NOT REQUIRE ISOLATING A PAIR VIA A TCA ISOLATION VALVE. ONCE POWERED DESCENT IS INITIATED THE MISSION WILL CONTINUE EVEN IF A THRUSTER PAIR IS ISOLATED. AFTER ONE PAIR HAS BEEN ISOLATED, THE PROBABILITY OF A SUBSEQUENT PROPELLANT LEAK DOWNSTREAM OF ANOTHER TCA ISOLATION VALVE IS VERY REMOTE, AND THE PROBABILITY OF A SUBSEQUENT PARTICULAR FAILURE WHICH CAUSES LOSS OF VEHICLE CONTROL IS EXTREMELY REMOTE. IN ADDITION, THE PROBABILITY OF THE SUBSEQUENT FAILURE IS LESS THAN THE RISK OF ABORTING DURING POWERED DESCENT. LUNAR STAY CAN BE PERMITTED FOR THE SAME RATIONALE USED DURING POWERED DESCENT.

27-22 DECREASING OR LOSS OF RCS HE PRESSURE

WHENEVER THERE IS A LOSS OF HELIUM SOURCE PRESSURE THERE EXISTS SOME CAPABILITY TO USE THAT SYSTEM IN A BLOWDOWN MODE. IN ORDER TO MAINTAIN AN OPERATIONAL RCS SYSTEM (MR 27-2) WITH A LEAKING SOURCE PRESSURE, THE CAPABILITY TO EXPEL A GIVEN WEIGHT OF PROPELLANT FROM THE LEAKING SYSTEM MUST EXIST. PRIOR TO POWERED DESCENT THE CAPABILITY IS TOO SMALL TO PROVIDE A REDUNDANT SYSTEM FOR THE TOTAL MISSION. ONCE POWERED DESCENT IS INITIATED, THE CAPABILITY MAY OR MAY NOT EXIST DEPENDING ON THE TIME INTO POWERED DESCENT WHEN THE LEAK OCCURS. IF PROJECTION AHEAD REVEALS THAT THIS CAPABILITY CAN NOT BE GAINED PRIOR TO TOTAL SOURCE PRESSURE LOSS OR TOUCHDOWN THEN AN ABORT WILL BE REQUESTED. HOWEVER, AFTER HIGH GATE LANDING IS EMINENT AND THE CREW PROCEDURES SO TIGHT THAT TROUBLESHOOTING A LEAK IS IMPOSSIBLE OR IMPRACTICAL, AND A LANDING WILL BE ATTEMPTED. IF THE LANDING IS ACCOMPLISHED, BUT THE PRESCRIBED BLOWDOWN CAPABILITY DOES NOT EXIST, THEN TWO OPERATIONAL RCS SYSTEMS WILL NOT BE AVAILABLE WHICH VIOLATES MR 27-20 AND REQUIRES ASCENT AT THE NEXT BEST OPPORTUNITY.

27-23 RCS PROPELLANT LEAK BETWEEN MAINS AND ISOLATION VALVES

PROPELLANT LEAKS ARE NOT HAZARDOUS TO THE CREW-- HOWEVER, A PROPELLANT LEAK CAN RESULT IN THE COMPLETE LOSS OF AN RCS PROPELLANT SYSTEM. SHOULD A PROPELLANT LEAK BETWEEN THE MAINS AND ISOLATION VALVES DEVELOP PRIOR TO HIGH GATE, AN ABORT WILL BE REQUESTED. THE ABORT IS REQUESTED BECAUSE THE LEAKING SYSTEM CANNOT BE COUNTED ON FOR PROPELLANT RESULTING IN ITS LOSS AS AN OPERATIONAL RCS SYSTEM. THIS VIOLATES MR 27-20 WHICH REQUIRES AN ABORT AT ANY TIME DURING POWERED DESCENT. HOWEVER AFTER HIGH GATE, LANDING IS EMINENT AND THE CREW PROCEDURES SO TIGHT THAT TROUBLE SHOOTING A LEAK IS IMPOSSIBLE OR IMPRACTICAL-- THEREFORE, A LANDING WILL BE ATTEMPTED. IF THE LANDING IS ACCOMPLISHED, THE LEAK WILL STILL CAUSE LOSS OF AN OPERATIONAL SYSTEM AND REDUNDANCY WHICH VIOLATES MR 27-20 AND REQUIRES ASCENT AT THE NEXT BEST OPPORTUNITY. DURING RENDEZVOUS PHASES THE FUNCTIONING RCS SYSTEM SHOULD BE USED AS LONG AS THE RCS PROPELLANT REDLINE IS NOT VIOLATED.

27-25 IMPINGEMENT CONSTRAINTS VIOLATED

IMPINGEMENT CONSTRAINTS AS DEFINED IN VOLUME II OF THE SODB SHOULD NEVER BE VIOLATED. IF THEY ARE EXCEEDED, THEN FURTHER OPERATION WHICH WOULD CONTINUE TO VIOLATE THESE CONSTRAINTS MUST BE INHIBITED. IF NOT INHIBITED, THE PLUME DEFLECTORS CAN FRACTURE INTO TWO PARTS AT THE POINT OF MAXIMUM HEATING (APPROXIMATELY TEN INCHES FROM THE TOP OF THE DEFLECTOR). THE BROKEN DEFLECTOR CAN THEN DAMAGE THE SPACECRAFT BY EITHER PUNCTURING OR DESTROYING ASCENT STAGE PANELS AND INSULATION. THE NET EFFECT OF IMPINGEMENT CONSTRAINT VIOLATION IS THEN TO ABORT THE MISSION PRIOR TO TOUCHDOWN. THE PROCEDURE WILL BE TO ABORT AND THEN ABORT STAGE AS SOON AS POSSIBLE. IF LANDING DID OCCUR EVEN THOUGH IMPINGEMENT CONSTRAINTS WERE VIOLATED, NOTHING CAN BE DONE TO CORRECT THE PROBLEM AND INSERTION COULD COME AT THE NOMINAL TIME.

DURING RENDEZVOUS IF IMPINGEMENT CONTRAINTS ARE VIOLATED THEN +/-X RCS BURNS ARE PROHIBITED TO PROTECT THE ASCENT STAGE.

7 SPACE ENVIRONMENT

R	ITEM	
	28-1	NO RATIONALE REQUIRED
	28-2	NO RATIONALE REQUIRED
	28-3	NO RATIONALE REQUIRED
	28-4	NO RATIONALE REQUIRED
	28-10	THE DATA SOURCES THAT WILL BE USED CONSIST OF THE LIMA RIOMETER SITE, NASA HEADQUARTERS SOURCES, AND APOLLO S/C. THE NASA HEADQUARTERS SOURCES REPRESENT THE BEST REAL-TIME, PRELAUNCH SOURCE OF DATA ON THE RESULTS OF A HIGH ALTITUDE NUCLEAR DETONATION. THE DATA IS A RESULT OF A COMPILATION OF VARIOUS SOURCES WITHIN THE DEPARTMENT OF DEFENSE AND THE STATE DEPARTMENT MADE BY THE JOINT ATOMIC ENERGY INTELLIGENCE COMMITTEE AND RELAYED THROUGH SPECIAL DATA CHANNELS, SET UP FOR THAT PURPOSE, TO THE MISSION DIRECTOR, AND THE SPACE ENVIRONMENT CONSOLE. BECAUSE OF THE NATURE OF THE RADIATION PROBLEM IN THIS AREA AND THE UNKNOWNS ASSOCIATED WITH THE INDIRECT MONITORING THAT IS AVAILABLE, NO DECISION SHOULD BE MADE UNTIL ALL AVAILABLE DATA HAS BEEN ANALYZED AND THERE IS SUFFICIENT EVIDENCE TO INDICATE THAT THE RESULTANT RADIATION WILL CONSTITUTE A HAZARD TO THE FLIGHT CREW.
	28-11A	DEFINITE EVENT IS DEFINED AS A NUCLEAR DETONATION AT SUCH AN ALTITUDE AND LOCATION AND OF SUCH A SIZE TO PRODUCE AN ENHANCEMENT OF THE APOLLO RADIATION ENVIRONMENT. NASA HEADQUARTERS SOURCES WILL PROVIDE THE FOLLOWING INFORMATION--- 1. NOTIFICATION OF AN EVENT WHICH SHOULD COMPLIMENT THE RIOMETER DATA. 2. TIME OF EVENT TO WHICH DECAY RATES CAN BE APPLIED. 3. ALTITUDE, LATITUDE, LONGITUDE, AND SIZE FROM WHICH THE DISTRIBUTION AND EXTENT OF THE ELECTRON CLOUD CAN BE DETERMINED. IF A DEFINITE EVENT IS CONFIRMED THEN THE COUNTDOWN WILL BE HELD UNTIL THE APPLICATION OF ALL AVAILABLE INFORMATION INDICATES THAT THE RADIATION WILL NOT EXCEED THE MISSION OPERATIONAL DOSE. (A TOTAL SKIN DOSE OF 400 RADS AND/OR A TOTAL DEPTH DOSE OF 50 RADS TO ANY MEMBER OF THE FLIGHT CREW.)
	28-11 B.1	IF, DURING THIS PHASE, A DEFINITE EVENT OCCURS AND THE TOTAL DOSE PROJECTED THROUGH THE MISSION DURATION INDICATES THE DOSE WILL EXCEED THE MOD, TLI WILL STILL BE GO. A NO-GO FOR TLI WILL NOT BE GIVEN IN THIS PHASE UNLESS THE ANALYSIS INDICATES THAT THE TOTAL MISSION DOSE WILL EXCEED THE MOD BY A SIGNIFICANT AMOUNT, THE EXTENT ALLOWED WILL BE DETERMINED IN REAL-TIME. AFTER A SUCCESSFUL LAUNCH AND EARTH ORBIT INSERTION WE ARE WILLING TO RISK HIGHER DOSE RATE TO TRY FOR A LUNAR TYPE MISSION.
	28-11 B.2	SELF-EXPLANATORY
	28-11C	WHEN A DEFINITE EVENT HAS OCCURRED AND THE S/C IS ABOVE THE VAN ALLEN BELTS, WE WILL CONTINUE THE MISSION BECAUSE THE FLIGHT CREW WILL NOT BE EXPOSED TO RADIATION FROM SUCH AN EVENT.

R	ITEM	
	28-12	THE MOD IS THE CUT OFF POINT WHERE THE VALUE OF THE MISSION IS INSUFFICIENT TO EXPOSE FLIGHT CREW MEMBERS TO ADDITIONAL RADIATION. NOTE--- TOTAL MISSION SKIN DOSE 400 RADS AND/OR TOTAL MISSION DEPTH DOSE (5 CM) 50 RADS TO ANY CREW MEMBER PRIOR TO SCHEDULED END OF MISSION.
	28-13	SOLAR FLARE ACTIVITY CANNOT BE PREDICTED WITH ANY DEGREE OF RELIABILITY. PREDICTIONS THAT ARE MADE ARE GENERALLY EXPRESSED AS A PERCENT OF PROBABILITY AND CANNOT BE RELATED TO A RESULTANT DOSE WITHOUT MAKING A NUMBER OF ASSUMPTIONS. THE MAJORITY OF THESE ASSUMPTIONS COULD BE UNFOUNDED IN THE ACTUAL SITUATION THUS IT IS NECESSARY TO TAKE A WAIT AND SEE WHAT HAPPENS TO THE ATTITUDE.

R	ITEM	
	28-14	A MAJOR SOLAR FLARE WILL PRODUCE HARMFUL RADIATION TO THE CREW ONLY BY MEANS OF THE PARTICLES EMITTED WITH THE FLARE. NOT ALL FLARES WILL EMIT THE HIGH ENERGY PARTICLES NECESSARY TO CAUSE THE RADIATION HAZARD. IF THERE ARE NO PARTICLES THERE WILL BE NO RADIATION DOSE RECEIVED BY THE CREW. THE TIME DELAY BETWEEN OBSERVING OR DETECTING THE FLARE AND DETECTING THE PARTICLES, IF ANY, CAN VARY FROM MINUTES TO HOURS. THE LONGER IT TAKES TO DETECT PARTICLES, WHEN THEY ARE PRESENT, THE LESS INTENSE WILL BE THE RADIATION DOSE. THERE IS NO BASIS FOR TAKING ANY ACTION OTHER THAN CONTINUING WITH THE NOMINAL MISSION UNLESS THERE IS DEFINITE CONFIRMATION OF PARTICLES IN THE VICINITY OF THE SPACECRAFT. ESTIMATES OF THE RADIATION DOSE WILL BE MADE ASSUMING THAT THERE WILL BE PARTICLES, BUT UNTIL THE PARTICLES ARE ACTUALLY MEASURED THIS ESTIMATE IS INVALID.
	28-14 B.1	IF ANALYSIS OF ALL AVAILABLE DATA INDICATES THAT THE MOD (400 RADS SKIN DOSE AND/OR 50 RADS DEPTH DOSE) WILL BE EXCEEDED PRIOR TO MISSION COMPLETION THEN THE COUNTDOWN SHOULD BE HELD AT SOME CONVENIENT POINT UNTIL FOLLOW ON ANALYSIS INDICATES THAT THE RESULTANT RADIATION DOSE WILL HAVE DROPPED TO WITHIN ACCEPTABLE LIMITS.
	28-14 B.2	IF, DURING THIS PHASE, A CONFIRMED PARTICLE EVENT IS ANALYZED AND THE TOTAL DOSE PROJECTED THROUGH THE MISSION DURATION INDICATED THE DOSE WILL EXCEED THE MOD, TLI WILL STILL BE GO. A NO-GO FOR TLI WILL NOT BE GIVEN IN THIS PHASE UNLESS THE ANALYSIS INDICATES THAT THE TOTAL MISSION DOSE WILL EXCEED THE MOD BY A SIGNIFICANT AMOUNT--- THE EXTENT ALLOWED WILL BE DETERMINED IN REAL-TIME. AFTER A SUCCESSFUL LAUNCH AND EARTH ORBIT INSERTION WE ARE WILLING TO RISK A HIGHER DOSE RATE TO TRY FOR A LUNAR TYPE MISSION.
	28-14 B.3	AFTER A GOOD TLI THE CREW WILL BE MORE OR LESS COMMITTED TO A CERTAIN AMOUNT OF RADIATION THAT WILL RESULT IF A SOLAR PARTICLE EVENT OCCURS. THERE ARE ONLY A FEW CASES WHERE A SITUATION COULD DEVELOP THAT IS TIME CRITICAL TO THE EXTENT THAT A DECISION WOULD HAVE TO BE MADE BASED ON PROJECTIONS FROM DATA NOT DIRECTLY MEASURED BY THE CSM INSTRUMENTATION. THESE CASES ARE WHERE THE CREW IS PREPARING TO TRANSFER INTO THE LM, OR JUST PRIOR TO TEI. DURING THESE SITUATIONS IT MAY BE DESIRABLE TO INHIBIT OR DELAY THESE ACTIVITIES UNTIL A BETTER KNOWLEDGE OF THE ENVIRONMENT IS OBTAINED BY ONBOARD MONITORS.
	28-14 C1-4	UNDER THIS SITUATION THE CREW WILL BE SUBJECT TO DOSES THAT WILL EXCEED THE MOD SHOULD THE NOMINAL MISSION PROFILE BE CONTINUED. THERE MAY BE WAYS TO REDUCE THE TOTAL RADIATION RECEIVED BY ADJUSTMENTS IN THE MISSION TIMELINE. THERE SHOULD, HOWEVER, BE NO DECISIONS MADE REGARDING CHANGING THE MISSION PROFILE UNLESS THE RESULTS WOULD MAKE A SIGNIFICANT REDUCTION IN THE DOSE TO THE CREW. THE ACTION THAT CAN BE TAKEN WILL BE GOVERNED BY THE PHASE OF THE MISSION AND THE EXTENT OF DOSE REDUCTION WILL HAVE TO BE DETERMINED BASED ON OCCURRING RADIATION. THE MISSION RULES REFLECT POSSIBLE ALTERNATIVES THAT MAY BE AVAILABLE DURING THE MISSION. DECISIONS ON THE IMPLEMENTATION OF THESE REQUIREMENTS WILL HAVE TO BE BASED ON THE ACTUAL SITUATION OCCURRING.

8 LANDING AND RECOVERY

R	ITEM	
	29-1	THERE IS THE POSSIBILITY OF A SPACECRAFT LAND LANDING IN THE LAUNCH SITE AREA. THE POSSIBILITY OF CREW INJURY FOLLOWING A LAND LANDING IS SUFFICIENTLY HIGH TO MAKE IT MANDATORY TO BE ABLE TO EFFECT THEIR RECOVERY WITHOUT A DELAY CAUSED BY WEATHER.
	29-2	THESE AREAS CONTAIN ALL THE LANDING POINTS THAT WOULD FOLLOW ABORTS INITIATED PRIOR TO EARLY S-IVB STAGING CAPABILITY DURING THE LAUNCH PHASE, AND THE LANDING POINTS THAT WOULD FOLLOW DEORBITS FROM EARTH PARKING ORBIT INTO EITHER THE WEST ATLANTIC OR MID-PACIFIC RECOVERY ZONES DURING THE FIRST FOUR REVOLUTIONS REGARDLESS OF LAUNCH AZIMUTH.
	29-3	FORTY HOURS IS THE NECESSARY TIME REQUIRED TO LOCATE THE CM AFTER A LANDING ANYWHERE IN THE WORLD BETWEEN 40 DEG. NORTH AND 40 DEG. SOUTH LATITUDE.
	29-4	EIGHTEEN HOURS IS THE NECESSARY TIME REQUIRED TO LOCATE THE CM AFTER ANY LANDING TARGETED TO A PTP OR THE MPL.
	29-5	IT IS HIGHLY DESIRABLE BECAUSE OF THE POSSIBILITY OF INCLEMENT WEATHER CONDITIONS IN THE PLANNED END OF MISSION RECOVERY AREA. THIS CAPABILITY WILL INSURE THAT THE TARGET POINT CAN BE MOVED TO AN AREA WITH ACCEPTABLE WEATHER CONDITIONS UNTIL ENTRY -24 HOURS. AFTER THIS TIME TARGET POINT RELOCATION WOULD BE ACCOMPLISHED BY CHANGING THE ENTRY RANGE.
	29-6	THESE ELLIPSE CONTAIN THE HIGH PROBABILITY LANDING POINTS FOR A DEORBIT FROM EARTH PARKING ORBIT FLYING A GUIDED OR A HALF LIFT ENTRY. THE PROBABILITY OF ACTUALLY LANDING IN ONE OF THESE ELLIPSES IS SUFFICIENTLY HIGH TO MAKE IT MANDATORY THAT THERE BE NO LAND MASSES IN THE AREA.
	29-7	THESE ELLIPSES CONTAIN THE LANDING POINTS FOR THE BACKUP MODES OF ENTRY. THE PROBABILITY OF ACTUALLY LANDING IN ONE OF THESE ELLIPSES IS SUFFICIENTLY HIGH TO MAKE IT MANDATORY THAT THERE BE NO LAND MASSES IN THE AREA.
	29-8	THESE ELLIPSES CONTAIN THE HIGH PROBABILITY LANDING POINTS FOR THE PRIMARY AND FIRST BACKUP MODES OF HIGH SPEED ENTRY. THE PROBABILITY OF A LANDING WITHIN EITHER OF THESE ELLIPSES IS SUFFICIENTLY HIGH TO MAKE IT MANDATORY THAT THERE BE NO LAND IN THE AREA.
	29-9	THE PROBABILITY OF ACTUALLY LANDING IN THESE AREAS IS SUFFICIENTLY HIGH THAT IT IS HIGHLY DESIRABLE TO HAVE THEM CLEAR OF ALL LARGE LAND MASSES.

9 AEROMEDICAL

R	ITEM	
		AEROMEDICAL MISSION RULE RATIONALE NOT SUBMITTED

10 LUNAR SURFACE

R	ITEM	
		LUNAR SURFACE MISSION RULE RATIONALE NOT SUBMITTED

APPENDIX A
DISTRIBUTION
LIST

R	ITEM
DI	ECTOR OF FLIGHT OPERATIONS
FA	SJOBERG, S. A. ROSE, R. G.
FL	GHT CONTROL DIVISION
FC	KRANZ, E. F. (5) ROACH, J. W.
FL	GHT CONTROL OPERATIONS BRANCH
FC	/HARLAN, C. S. (11)
CS	SYSTEMS BRANCH
FC	/ALDRICH, A. D. (18)
LM	SYSTEMS BRANCH
FC	/HANNIGAN, J. E. (25) EDELIN, F. (4)
FL	IGHT DYNAMICS BRANCH
FC	/BOSTICK, J. C. (20)
MI	SSION SIMULATION AND REQUIREMENTS BRANCH
FC	/HOOVER, R. A. (8)
SP	CE SCIENCE AND TECHNOLOGY BRANCH
FC	/SHELLEY, C. B. (2)
LU	AR/EARTH EXPERIMENTS BRANCH
FC	/SAULTZ, J. E. (5)
MS	C FLIGHT CONTROL OFFICE
PM	-MO-F/HAMNER, R. S. (2)
FL	GHT SUPPORT DIVISION
FS	/DUNSETH, L. C.
FL	IGHT SOFTWARE BRANCH
FS	/STOKES, J. D. (2)
MI	SSION PLANNING AND ANALYSIS DIVISION
FM	/MAYER, J. P. HUSS, C. TINDALL, H. W.
FL	IGHT ANALYSIS BRANCH
FM	/ALLEN, C. C. (2)
MA	TH PHYSICS BRANCH
FM	/MCPHERSON, J. C.
MI	SSION ANALYSIS BRANCH
FM	/BERRY, R.
RE	NDEZVOUS ANALYSIS BRANCH
FM	/LINEBERRY, E. C.

R	ITEM
	GUIDANCE & PERFORMANCE BRANCH
	FM7/CASSETI, M. D.
	APOLLO TRAJECTORY SUPPORT OFFICE
	FM13/PARTEN, R.
	LANDING AND RECOVERY DIVISION
	FL/HAMMACK, J. B.
	ASTRONAUT OFFICE
	CB/STAFFORD, T. P. (7)
	FLIGHT CREW SUPPORT DIVISION
	CF3/WARREN, D. K. O'NEILL, J. W. (2) CF 24/P. KRAMER
	DIRECTOR OF MEDICAL RESEARCH AND OPERATIONS
	DA/ZIEGLSCHMID, J. F., M. D.
	APOLLO SPACECRAFT PROGRAM OFFICE
	PA22/MCDIVITT, J. A. KLEINKNECHT, K. C. MORRIS, O. SIMKINSON, S. PD/KUBICKI, R.L. PD12/ MISSION STAFF ENGINEER (2) PD7/KOHRS, R. H. PD7/SILVER, M. (5) PE/CORCORAN, D.M. (3) PF/COHEN, A.
	DIRECTOR OF ENGINEERING AND DEVELOPMENT
	EA/FAGET, M. A. (4) EA5/DEANS, P. M.
	JOHN F. KENNEDY SPACE CENTER NASA-MSOB
	LO/KAPRYAN, W. J. LO-OPN/DONNELLY, P. LO-PLN-2/KNIGHT, G. W. PSK/MORSE, A. E.
	OFFICE OF MANNED SPACE FLIGHT
	MAD/ALLER, R.O. (4) MAT/ALLMAN, J.
	NORTH AMERICAN ROCKWELL, DOWNEY, CALIFORNIA
	POTTS, J. R. AB70
	BOEING - DATA MANAGEMENT
	M/S HA-04 (4)
	FLIGHT SAFETY BRANCH SF/LINDSEY, OTHO

APOLLO

FMRRD

FLIGHT MISSION RULE RATIONALE DOCUMENT

APOLLO 14
(AS-509/110/LM-8)

DECEMBER 15, 1970

FCD
MSC
NASA