HYBRID

National Aeronautics and
Space Administration

NASA-STD-8739.4 with Change 1
February 1998

PREVIOUS VERSION PUBLISHED AS NAS 5300.4(3G-1)

CRIMPING, INTERCONNECTING CABLES, HARNESSES, AND WIRING

NASA TECHNICAL STANDARD

FOREWORD

Effective Date: February 9, 1998

This Standard provides a baseline for NASA project offices to use when preparing or evaluating process procedures for the manufacture of space flight hardware or mission critical ground support equipment.

This Standard:

a. Prescribes NASA's process and end-item requirements for reliable crimped connections, interconnecting cables, harnesses, and wiring.

b. Establishes responsibilities for training personnel.

c. Establishes responsibilities for documenting process procedures including supplier innovations, special processes, and changes in technology.

d. For the purpose of this Standard, the term supplier is defined as in-house NASA, NASA contractors, and subtier contractors.

NASA Installations shall:

a. Review and invoke the provisions of this Standard for procurements involving crimped connections, interconnecting cables, harnesses, or wiring of space flight hardware and mission critical ground support equipment.

b. Review and invoke the provisions of this Standard for in-house operations involving crimped connections, interconnecting cables, harnesses, or wiring of space flight hardware and mission critical ground support equipment.

c. Tailor specific provisions of this Standard to address program or unique contractual or mission requirements.

d. Assure that NASA suppliers invoke this Standard on subcontractors, purchase orders, and on subtier suppliers where applicable.

e. Furnish copies of this Standard in the quantities required to NASA suppliers and subtier suppliers.

Questions concerning the application of this Standard to specific procurements shall be referred to the procuring NASA installation, or its designated representative.

This Standard cancels NASA Assurance Standard (NAS) 5300.4(3G-1), Workmanship Standard for Interconnecting Cables, Harnesses, and Wiring, and NASA Handbook (NHB) 5300.4(3H), Requirements for Crimping and Wire Wrap.

This Standard shall not be rewritten or reissued in any other form not approved by NASA.

Other processes not covered by this standard may be required. The design, materials, and processes shall be defined in engineering documentation.

Comments and suggestions for improving this Standard may be submitted using the form "NASA Technical Standard Improvement Proposal." A copy of this form is included at the end of this standard.

Frederick D. Gregory

Associate Administrator for
Safety and Mission Assurance

DISTRIBUTION:

SDL1 (SIQ)

NASA TECHNICAL STANDARDS FOR SPACE FLIGHT AND MISSION CRITICAL GROUND SUPPORT HARDWARE

NASA Technical Standards can be found on the World Wide Web at URL address http://standards.nasa.gov/.

Title	Number
Workmanship Standard for Staking and Conformal Coating of Printed Wiring Boards and Electronic Assemblies	NASA-STD-8739.1
Workmanship Standard for Surface Mount Technology	NASA-STD-8739.2
Soldered Electrical Connections	NASA-STD-8739.3
Crimping, Interconnecting Cables, Harnesses, and Wiring	NASA-STD-8739.4
Fiber Optic Terminations, Cable Assemblies, and Installation	NASA-STD-8739.5
Standard for Electrostatic Discharge Control (Excluding Electrically Initiated Explosive Devices)	NASA-STD-8739.7

REVISIONS

REVISION	DESCRIPTION	DATE
INITIAL ISSUE		FEBRUARY 1998
1	Page iii: Update URL for accessing NASA Technical Standards. The correct URL is http://standards.nasa.gov/ Page iii: Update references to NASA 5300.4(3J-1) and NASA 5300.4(3M) to NASA-STD- 8739.1 and NASA-STD-8739.2 respectively. Page iv: Insert Revisions page and renumber Table of Contents accordingly. Para 2.1 Change citation for NHB 8060.1 to NASA-STD-6001 and change citation for NHB 1700.1(V1) to NPR 8715.3. Para 3.2 Delete NHB from Acronym List and Add NPR to acronym list Para 4.3 No. 4: Change sentence to "**Crimping**. Stranded wire shall be used for crimping. Crimping of solid wire is prohibited. Crimping of solder tinned stranded wire is prohibited." Para 5.7: Change address for training center to: GSFC Training Center Code 300.1 7000 Columbia Gateway Dr. Columbia, MD. 21046 Para 6.8: Change sentence to read: "All materials used in vacuum or low pressure shall not release greater than 1.0 percent total mass loss (TML) and 0.1 percent collected volatile condensable material (CVCM) when tested in accordance with ASTM-E-595." Para 6.8: Change NHB 8060.1" to "NASA-STD-6001" in the second sentence.	1/27/06 WBHIII

REVISION	DESCRIPTION	DATE
1	Para 7.3 No. 11 Change NHB 8060.1 to NASA-STD-6001 Para 9.7: Change tape "may be applied to bundle" to "shall be applied to bundle". Para 14.1 Change NHB 1700.1 to NPR 8715.3 Para 18.2 No. 6.c: For the Insulation Resistance (IR) Test, change "for a minimum of 1 minute, or as specified in the test procedure" to "until a stabilized reading is attained not to exceed 1 minute, or as specified in the test procedure." Appendix C Update the address for submitting changes to NASA Technical Standards	

CONTENTS

PARAGRAPH PAGE

FOREWORD i

TABLE OF CONTENTS vi

LIST OF FIGURES x

LIST OF TABLES xii

1. SCOPE 1-1
1.1 Purpose 1-1
1.2 Applicability 1-1

2 APPLICABLE DOCUMENTS 2-1
2.1 Applicable Specifications 2-1
2.2 Other Documents 2-2

3 DEFINITIONS AND ACRONYMS 3-1
3.1 Definitions 3-1
3.2 Acronyms 3-5

4 GENERAL 4-1
4.1 General 4-1
4.2 Approval of Departures from this Standard 4-1
4.3 Principals of Reliable Cabling and Wiring 4-1
4.4 Documentation 4-2
4.5 Rework 4-2

5. TRAINING AND CERTIFICATION PROGRAM 5-1
5.1 General 5-1
5.2 Vision Requirements 5-1
5.3 Certification Levels 5-2
5.4 Training Program Requirements 5-2
5.5 Documentation 5-3
5.6 Maintenance of Certification Status 5-3
5.7 Training Resources 5-4

6. FACILITIES, EQUIPMENT AND MATERIALS 6-1
6.1 Facility Cleanliness 6-1
6.2 Environmental Conditions 6-1
6.3 Tool and Equipment Control 6-2
6.4 Electrostatic Discharge Requirements 6-3

CONTENTS - CONT.

6.5 In-Process Storage and Handling 6-3
6.6 Wire Processing and Preparation Tools 6-3
6.7 Inspection Optics 6-4
6.8 Materials Selection 6-4
6.9 Solvents and Cleaners 6-4
6.10 Personnel Protection 6-5

7. DESIGN PRACTICES 7-1
7.1 General 7-1
7.2 Requirements Not Covered 7-1
7.3 Design Considerations 7-1

8. INTERCONNECTING CABLE/HARNESS FIXTURING 8-1
8.1 General 8-1
8.2 Mockup and Wiring Board Design Parameter 8-1
8.3 Temporary Identification 8-1
8.4 Interconnecting Cable and Harness Protection 8-1

9. FORMING WIRES INTO CABLES AND HARNESSES 9-1
9.1 General 9-1
9.2 Lacing for Trunk, Branches, and Breakouts 9-1
9.3 Fabric Braid Sleeving (Prewoven) 9-5
9.4 Fabric Braid Directly Woven on Interconnecting Harness or Cable 9-6
9.5 Spiral Wrap Sleeving 9-7
9.6 Plastic Straps 9-8
9.7 Metal Braid Shielding 9-9
9.8 Insulation Sleeving/Tubing 9-9
9.9 Installation of Heat-Shrinkable Sleeving 9-11
9.10 Long Lengths of Shrinkable Sleeving 9-11
9.11 Shrinkable Part Requirements and Installation 9-12

10. STRIPPING INSULATION FROM CONDUCTORS AND CABLE 10-1
10.1 Stripping Round Conductors 10-1
10.2 Stripping Jackets Over Shields 10-2
10.3 Stripping Flat Conductor Cable 10-2

11. CABLE SHIELDING AND SHIELD TERMINATION 11-1
11.1 General RFI/EMI Practices 11-1
11.2 Shield Termination 11-1
11.3 Terminating Overall Shielding Using RFI/EMI Adapters 11-2
11.4 Individual Shield Termination Using Heat Shrinkable Solder Sleeves 11-2
11.5 Individual Shield Termination Using Two-Piece Crimp Rings 11-3
11.6 Group-Grounding of Individual Shield Terminations 11-3

CONTENTS - CONT.

11.7 Large Compression Ring Grounding 11-5
11.8 Floating Shield Terminations 11-7
11.9 Unshielded Wire Exposure and Total Length of Grounding Wires 11-7

12. CRIMP CONNECTIONS 12-1
12.1 General 12-1
12.2 Examination of Crimp Contact 12-1
12.3 Process Controls 12-1

13. CONNECTOR ASSEMBLY 13-1
13.1 General 13-1
13.2 Assembly of Crimp-Type Connectors (Including Terminal Junctions) 13-1
13.3 Assembly of Solder-Type Connectors 13-1
13.4 Assembly of Hermetic and Environmental Connectors 13-2
13.5 Assembly (Torquing) of Adapters and Cable Clamps to Connectors 13-2
13.6 Assembly of RF Connectors and Coaxial Contacts 13-3
13.7 Process Controls for Two-Piece Crimp Rings and Stub-Type Splicing Devices 13-3
13.8 Inspection and Verification Testing 13-4

14. HARNESS IDENTIFICATION 14-1
14.1 General 14-1
14.2 Permanent Identification 14-1
14.3 Verification of Identification 14-1

15. INTERCONNECTING HARNESS AND CABLE CLEANING 15-1
15.1 General 15-1
15.2 Cleaning the Harness Assembly 15-1
15.3 Cleaning Harness Connectors 15-1
15.4 Cleaning Coaxial Connectors (Assembled) 15-1

16. INTERCONNECTING HARNESS AND CABLE HANDLING AND PROTECTION 16-1
16.1 General 16-1
16.2 In-Process Protection 16-1
16.3 Completed Interconnecting Harness and Cable Storage Protection 16-1

17. CONNECTOR MATING 17-1
17.1 General 17-1
17.2 Connector Mating and Demating 17-1
17.3 Coaxial Connector Mating 17-2

TABLE OF CONTENTS - CONT.

18. TESTING AND INSPECTION 18-1
18.1 General 18-1
18.2 Testing 18-1

19. QUALITY ASSURANCE PROVISIONS 19-1
19.1 General 19-1
19.2 Magnification Aids 19-2
19.3 Documentation Verification 19-2
19.4 Documentation Authorization. 19-3
19.5 Verification of Tools, Equipment, and Materials 19-3
19.6 Inspection Criteria 19-3

LIST OF FIGURES

Figure 6-1. Comfort Zone--Temperature Versus Humidity Requirements 6-1
Figure 8-1. Line Drawing of Typical Harness Layout 8-2
Figure 8-2. Typical Harness Board Hardware and Fixtures 8-3
Figure 9-1. Starting Stitch 9-2
Figure 9-2. Spot Tie (Typical) 9-2
Figure 9-3. Closing Stitch and Single Tape--Illustration 9-3
Figure 9-4. Alternate Closing Stitch and Single Tape--Illustration 9-3
Figure 9-5. Running Lockstitch 9-4
Figure 9-6. Flat Lacing Stitches 9-5
Figure 9-7. Securing Fabric Braid Sleeving 9-5
Figure 9-8. Starting Lock 9-6
Figure 9-9. Forming Ending Pigtail 9-7
Figure 9-10. Braiding at a Breakout or Y Intersection 9-7
Figure 9-11. Spiral Wrap Sleeving 9-8
Figure 9-12. Plastic Strap Orientation 9-9
Figure 9-13. Illustration of Shrink Sleeve Installation (Typical) 9-11
Figure 9-14. Installation of Long Lengths of Sleeving to Achieve Controlled Dimensions 9-12
Figure 9-15. Sleeving Installation (Typical) 9-13
Figure 11-1. Terminating Overall Shield in RFI Adapter (Typical) 11-2
Figure 11-2. Individual Shield Termination Using a Heat Shrinkable Solder Sleeve . 11-2
Figure 11-3. Individual Shield Termination Using a Two-Piece Crimp Ring 11-3
Figure 11-4. Group Grounding of Staggered Shields 11-4
Figure 11-5. Group-Grounding of Individual Shield Terminations 11-5
Figure 11-6. Large Compression Ring Grounding (Typical Applications) 11-5
Figure 11-7. Floating Shield Termination 11-7
Figure 11-8. Conductor Exposure for Individual Shield Termination Types 11-8

Figure 12-1. Crimp Joint Tensile Failure Categories 12-4

Figure 13-1. Typical Push Test Tool 13-5

Figure 13-2. Application of Retention Tool for Gripping Wire (Typical) 13-5

Figure 15-1. Visual Examination Inside the Socket Contact for Flux Residue 15-2

Figure A-1 - A-2. Wiring: Connectors, Cabling, and Harnessing - Wire Dress to Connectors A-1

Figure A-3 - A-6. Wiring: Connectors, Cabling, and Harnessing - Stress Relief Shrinkable Sleeving on Solder Cups A-2

Figure A-7 - A-10. Wiring: Connectors, Cabling, and Harnessing, Wire Preparation, Mechanical Stripping A-3

Figure A-11 - A-14. Wire Preparation: Mechanical Stripping A-4

Figure A-15 - A-18. Wiring: Connectors, Cabling, and Harnessing, Wire Preparation, Thermal Stripping A-5

Figure A-19 - A-21. Wiring: Connectors, Cabling, and Harnessing, Wire Preparation, Tinning Stranded Conductors A-6

Figure A-22 - A-24. Wiring: Connectors, Cabling, and Harnessing, - Installation of Straps ... A-7

Figure A-25 - A-26. Crimps: Insulation Clearance A-8

Figure A-27 - A-28. Crimps: Acceptable and Unacceptable A-9

Figure A-29 - A-30. Crimps: Unacceptable A-10

Figure B-1. Illustration of Proper Trimback of Jacket to Isolate it from the Clamping System B-2

Figure B-2. Broken Solder Joint Caused by Insufficient Solder Fill B-3

Figure B-3. Problem Point for Kynar Stress Relief Sleeving B-3

LIST OF TABLES

Table 7-1. Bend Radii for Completed Interconnecting Cable or Harness 7-3

Table 9-1. Spot Tie, Plastic Strap, and Stitch Spacing Dimensions 9-3

Table 9-2. Distances From Connectors or Connector Accessories to Beginning of Harness Ties 9-4

Table 9-3. Selection Guide for Use of Polyolefin and Polyvinylidene Fluoride Sleeving mm (inches) 9-10

Table 11-1. Shield Termination Control for Group Grounding 11-4

Table 11-2. Shield Termination Control (Refer to Figure 8-8) 11-7

Table 12-1. Crimp Tensile Strength 12-3

Table 13-1. Pull Force 13-4

Table 13-2. Contact Retention Test Forces 13-4

Table 17-1. Mating Torque Values for Coaxial Connectors 17-2

LIST OF APPENDICES

APPENDIX A. WIRE VISUAL AIDS AND ILLUSTRATIONS..... A-1

APPENDIX B. CRITICAL PROBLEMS IN COAXIAL CABLE ASSEMBLY B-1

APPENDIX C. NASA TECHNICAL STANDARD IMPROVEMENT PROPOSAL.....C-1

CHAPTER 1 - SCOPE

1.1 Purpose

1 This publication sets forth requirements for interconnecting cable and harness assemblies that connect electrical/electronic and electromechanical components.

2. Special requirements may exist that are not covered by or are not in conformance with the requirements of this publication. Engineering documentation shall contain the details for such requirements, including modifications to existing hardware, and shall take precedence over appropriate portions of this publication when approved in writing by the procuring NASA Center prior to use.

1.2 Applicability

This publication is applicable to NASA programs involving interconnecting cable and wire harnesses for flight hardware, mission critical ground support equipment, and elements thereof, and wherever invoked contractually.

CHAPTER 2 - APPLICABLE DOCUMENTS

2.1 Applicable Specifications

Copies of the following specifications, when required in connection with a specific procurement, can be obtained from the procuring NASA Center or as directed by the contracting officer. Unless otherwise specified, the issue in effect on the date of invitation for bids or requests for proposal shall apply. The following related documents form a part of this publication to the extent specified herein.

FEDERAL SPECIFICATIONS:

TT-I-735	Isopropyl Alcohol
O-E-760	Ethyl Alcohol (Ethanol) Denatured Alcohol; Proprietary Solvents and Special Industrial Solvents

NASA SPECIFICATIONS:

MIL-STD-975	NASA Standard EEE Parts List
NASA-STD-8739.7	NASA Technical Standard for Electrostatic Discharge Control (Excluding Electronically Initiated Explosive Devices)
NPR 8715.3	NASA Safety Manual
NASA-STD-6001	Flammability, Odor, and Offgassing Requirements and Test Procedures for Materials in Environments that Support Combustion
NASA-STD-8739.3	NASA Technical Standard for Soldered Electrical Connections

NATIONAL STANDARDS:

American National Standards Institute (ANSI):

ANSI/NCSL Z540-1-1994	General Requirements for Calibration Laboratories and Measuring and Test Equipment

American Society for Testing and Materials (ASTM)

ASTM-E-595	Total Mass Loss and Collected Volatile Condensable Materials from Outgassing in a Vacuum Environment

2.2 Other Documents:

Industrial Ventilation: A Manual of Recommended Practice.
Published by the American Conference of Governmental Industrial Hygienists;
1330 Kemper Meadow Drive; Cincinnati, OH 45240.
URL http://www.acgih.org

Occupational Safety and Health Administration, 29 CFR.

CHAPTER 3 - DEFINITIONS AND ACRONYMS

3.1 Definitions

The following definitions apply to terms used in this Standard.

Accessories. Mechanical devices, such as cable clamps, added to connector bodies.

Adapter. An intermediate device to provide for attaching special accessories or to provide special mounting means.

Barrel (Contact Wire Barrel). The section of contact that accommodates the stripped conductor.

Birdcaging. The radial expansion of individual strands in a stranded conductor (bowing outward) that can occur in the exposed portion of the conductor between the insulation strip and termination point.

Braid. A fibrous or metallic group of filaments interwoven to form a protective covering over one or more wires.

Breakout. The separation of a conductor or group of conductors from the main body of wires in a harness.

Bubble Pack. A laminated plastic sheet that is formed with patterned air entrapment ("bubbles"). The bubbles provide excellent cushioning for anything enclosed between layers of the material.

Cable. A shielded single conductor or a combination of conductors insulated from one another (multiple conductor).

Cable, Coaxial. A cable in which an insulated conductor is centered inside another. The outer conductor is usually a metal braid or metal sheath. Braided cables usually have an outer insulating jacket over the braid. Coaxial cables are used primarily for transmission of RF signals.

Cable, Shielded. One or more insulated conductors covered with a metallic outer covering, usually a metal braid.

Cable Clamp. A mechanical clamp attached to the wire entrance of a connector to support the cable or wire bundle, provide stress relief, and absorb vibration and shock.

Certification. The act of verifying and documenting that personnel have completed required training, have demonstrated specified proficiency, and have met other specified requirements.

Cold Flow. Movement of insulation (e.g., Teflon) caused by pressure.

Conductor. A lead or wire, solid, stranded, or printed wiring path serving as an electrical connection.

Connector, Body. The main portion of a connector to which contacts and other accessories are attached.

Connector, Grommet. An elastomeric seal used on the cable side of a connector body to seal the connector against contamination and to provide stress relief.

Connector, Insert. The part of a connector that holds the contacts in position and electrically insulates them from each other and the shell.

Contact. The conductive element in a connector or other terminal device that mates with a corresponding element for the purpose of transferring electrical energy.

Contact, Crimp. A contact whose crimp barrel is a hollow cylinder that accepts the conductor. After a conductor has been inserted, a tool is used to crimp the contact metal firmly onto the conductor.

Contact, Insertable/Removable. A contact that can be mechanically joined to or removed from an insert. Usually, special tools are used to insert (lock) the contact into place or to remove it.

Contact, Pin. Male-type contact designed to slip inside a socket contact.

Contact Retention. The axial load in either direction that a contact can withstand without being dislodged from its normal position within an insert or body.

Contact, Socket. A female-type contact designed to slip over a pin contact.

Contaminant. An impurity or foreign substance present in a material that affects one or more properties of the material. A contaminant may be either ionic or nonionic. An ionic, or polar compound, forms free ions when dissolved in water, making the water a more conductive path. A nonionic substance does not form free ions, nor increase the water's conductivity. Ionic contaminants are usually processing residue such as flux activators, finger prints, and etching or plating salts.

Crimp. The physical compression (deformation) of a contact barrel around a conductor to make an electrical and mechanical connection to the conductor.

Crimping. A method of mechanically compressing or securing a terminal, splice, or contact to a conductor.

Drain Wire. A wire that runs linearly along a foil shield wire or cable and is used to make contact with the shield. Grounding of foil shields is done with drain wires.

Electromagnetic Interference. The unwanted intrusion of electromagnetic radiation energy whose frequency spectrum extends from subsonic frequency to X-rays.

Ferrule. A short metal tube used to make crimp connections to shielded or coaxial cables.

Fillet. A smooth concave buildup of material between two surfaces; e.g., a fillet of solder between a conductor and a solder terminal.

Grommet. An insulator that covers sharp edges of holes through panels and partitions to protect wire insulation from cut-through damage.

Harness. One or more insulated wires or cables, with or without helical twist; with or without common covering, jacket, or braid; with or without breakouts; assembled with two or more electrical termination devices; and so arranged that as a unit it can be assembled and handled as one assembly.

Insertion Tool. A device used to install contacts into a contact cavity in a connector insert.

Interfacial Seal. A sealing of mated connectors over the whole area of the interface to provide sealing around each contact.

Jacket. The outermost layer of insulating material of a cable or harness.

Joint. A termination.

Mate. The joining of two connectors.

Molding. The sealing of a connector backshell area or a cable breakout with a compound or material that excludes moisture and provides stress relief. The material is injected into molds that control its configuration.

Offgassing. The release of a volatile part(s) from a substance when placed in a vacuum environment that may affect crew members.

Outgassing. The release of a volatile part(s) from a substance when placed in a vacuum environment.

Radio Frequency. The frequency spectrum from 15 kHz to 100 GHz. Cables are seldom used above 18 GHz.

Radio Frequency Interference. Electromagnetic radiation in the radio frequency spectrum from 15 kHz to 100 GHz.

Sealing Plug. A plug that is inserted to fill an unoccupied contact aperture in a connector. Its function is to seal an unoccupied aperture in the assembly, especially in environmental connectors.

Shielded Cable. Cable surrounded by a metallic covering intended to minimize the effects of electrical crosstalk interference or signal radiation.

Shielding. The metal covering surrounding one or more conductors in a circuit to prevent interference or signal radiation.

Solder. A nonferrous, fusible metallic alloy used to join metallic surfaces.

Solder Cup Terminal. A hollow, cylindrical terminal designed to accommodate one or more conductors.

Soldering. The process of joining clean metallic surfaces through the use of solder without direct fusion of the base metals.

Solder Sleeve. A heat-shrinkable solder termination device with meltable sealing preforms at ends.

Splice. The joining of two or more conductors to each other.

Spacecraft. Devices, manned or unmanned, which are designed to be placed into a suborbital trajectory, an orbit about the earth, or into a trajectory to another celestial body.

Strain Relief. A connector device that prevents the disturbance of the contact and cable terminations.

Stranded Conductor. A conductor composed of a group of smaller wires.

Stress Relief. The formed portion of a conductor that provides sufficient length to minimize stress between terminations.

Strip. To remove insulation from a conductor.

Supplier. In-house NASA, NASA contractors, and subtier contractors.

Tab Terminal. A flat-surface terminal that is broad compared to the metal thickness. Wires are often soldered along the flat surface.

Tang (Connector Backshell). A backshell tang is a tapering metal projection (straight, 45°, or 90° to the axis of the connector) designed to accommodate cable-tie attachments. The cable-ties grip and hold harness wires exiting from the connector, thus providing stress relief for the wires.

Tines. Tines are the members of a contact retention system that capture or "lock" removable crimp contacts into the contact cavities.

Wicking. A flow of molten solder, flux, or cleaning solution by capillary action.

Wire. A single metallic conductor of solid, stranded, or tinsel construction, designed to carry currents in an electrical circuit. It may be bare or insulated.

Wire Dress. The arrangement of wires and laced harnesses in an orderly manner.

3.2 Acronyms

The following acronyms apply to terms used in this Standard.

ACS	American Chemical Society
ANSI	American National Standards Institute
ASTM	American Society for Testing and Materials
AWG	American Wire Gage
CFR	Code of Federal Regulation
CVCM	Collected Volatile Condensable Material
DWV	Dielectric Withstanding Voltage
EEE	Electrical, Electronic, and Electromechanical
EMI	Electromagnetic Interference
ESD	Electrostatic Discharge
ESDS	Electrostatic Discharge Sensitive
FEP	Fluorinated Ethylene Propylene
GHz	Gigahertz
GSFC	Goddard Space Flight Center
IR	Insulation Resistance
JPL	Jet Propulsion Laboratory
MSDS	Material Safety Data Sheet
NAS	NASA Assurance Standard
NASA	National Aeronautic and Space Administration
NASA-STD	NASA Standard
NPR	NASA Procedural Requirements
OD	Outside Diameter
OSHA	Occupational Safety and Health Administration
PET	Polyethylene Terephthalate
PTFE	Polytetrafluoroethylene

PTH	Plated Through Hole
PVDF	Polyvinylidene Fluoride
RF	Radio Frequency
RFI	Radio Frequency Interference
RH	Relative Humidity
RMS	Root Mean Square
SMT	Surface Mount Technology
TML	Total Mass Loss

CHAPTER 4 - GENERAL

4.1 GENERAL

1. **Implementation**. NASA quality assurance personnel will advise and assist suppliers, NASA personnel, and delegated agencies in the proper and effective implementation of the provisions of this publication. Effective implementation includes establishing a system that will identify each inspection point and provide records.

2. **Changes in Requirements**. When related requirements or changes in requirements are specified, NASA quality assurance personnel will assure that the Government agency delegated to inspect at the supplier's site of fabrication has received full instructions so that the work will be inspected to actual contract requirements.

3. **Nonstandard Processes, Materials, or Parts**. When the supplier intends to use processes, materials, or parts not covered by this publication, the supplier shall document the details of fabrication and inspection, including acceptance and rejection criteria, and shall provide appropriate test data. Such documentation shall be approved by the procuring NASA Center prior to use.

4.2 Approval of Departures from this Standard

1. Departures from this publication require written approval from the cognizant NASA contracting officer. The supplier is responsible for assuring that any departures from this publication are evaluated by, coordinated with, and submitted to the procuring NASA Center for approval prior to use or implementation.

2. For in-house NASA projects, this publication requires written approval by the in-house NASA project management to deviate from the provisions herein.

4.3 Principles of Reliable Cabling and Wiring

1 **Factors Controlling Reliability**. Reliable interconnecting cable and wire harnesses result from proper design, control of tools, materials, work environments, and careful workmanship by trained and certified personnel.

2 **Fabrication Principles**. All fabrication shall be performed to meet governing engineering documentation.

3 **Splicing**. Splicing damaged or broken conductors is not permitted.

4 **Crimping**. Stranded wire shall be used for crimping. Crimping of solid wire is prohibited. Crimping of solder tinned wire is prohibited.

5 **Design Considerations**. The basic design considerations to assure reliable interconnecting cable and wire assemblies are as follows:

a. The associated materials, parts, and hardware used shall be selected to provide proper fit, function, and support of wiring and cabling.

b. Tools used shall be those that properly process wires and cables during preparation and assembly without damaging them.

c. Wires shall not be taut; provision shall be made for stress relief.

d. Wiring installation and connectors shall be assembled, tested, and inspected to verify conformance to requirements.

e. Support of wiring, wire bundles, and harnesses shall be designed to control and minimize the transfer of shock and vibration induced while loading into the connector and/or wire terminations. Excessive flexing or pressure over sharp or rough edges shall be precluded.

f. Harness and cable protection shall be added in areas where sharp or rough edges are present and abrasion could occur.

4.4 Documentation

1. The supplier shall document the methods and procedures proposed to incorporate the requirements of this publication into the design, fabrication, and inspection of cables and harnesses involved in the contract or purchase order.

2. Documents required herein, except as specified by paragraph 4.1-3, shall be submitted to the procuring NASA Center or its designated representative as required by the contract or purchase order. Applicable supplier cabling and harnessing program documents, or portions thereof, accepted on other NASA contracts shall be included whenever possible to avoid duplication of effort.

4.5 Rework

1. **Rework**. Rework is permissible unless excluded by other provisions of the contract. All rework shall meet the requirements of this publication and approved engineering documentation.

2. **Repair is not rework**. Repairs shall be made only in compliance with applicable contractual requirements and after authorization for each incident by the procuring NASA Center. Repairs shall be accomplished using documented methods previously approved by the procuring NASA Center. For in-house NASA projects, repairs shall be authorized for each incident by the Project Office and Quality Management, as appropriate.

CHAPTER 5 - TRAINING AND CERTIFICATION PROGRAM

5.1 General

1. The supplier is responsible for maintaining a documented training program that meets the requirements of this Standard.

2. The supplier shall assure that the design personnel are familiar with the requirements of this Standard, crimping, cabling, and harnessing techniques, and other pertinent requirements of the contract. The supplier shall implement and document a training program which provides the necessary training of fabrication and inspection personnel in crimping, cabling, and harnessing requirements and techniques. Use of equipment and procedures pertinent to their responsibilities in performance of the contract requirements shall also be documented. The supplier is responsible for certifying and maintaining the certification of each individual who fabricates, inspects, or instructs.

3. Operators, inspectors, and instructors shall be qualified to fulfill all requirements of this Standard that relate to their assigned tasks. Demonstration of proficiency and understanding of the requirements is a requisite for certification and recertification. Evidence of certification status shall be maintained in the work area.

5.2 Vision Requirements

1. The supplier is responsible for ensuring that all personnel who perform or inspect crimping, cabling or harnessing meet the following vision test requirements as a prerequisite to training, certification, and recertification. The vision requirements may be met with corrected vision (personal eyeglasses). The vision tests shall be administered every 2 years by a qualified eye examiner, accepted by the procuring supplier, using standard instruments and techniques. Results of the visual examinations shall be maintained and available for review.

2. The following are minimum vision requirements:

a. **Far Vision**. Snellen Chart 20/50.

b. **Near Vision**. Jaeger 1 at 355.6mm (14 inches) , reduced Snellen 20/20, or equivalent.

c. **Color Vision**. Ability to distinguish red, green, blue, and yellow colors as prescribed in Dvorine Charts, Ishihara Plates, or AO-HRR Tests.

NOTE: ***A PRACTICAL TEST, USING COLOR CODED WIRES AND/OR COLOR CODED ELECTRICAL PARTS, AS APPLICABLE, IS ACCEPTABLE FOR COLOR VISION TESTING.***

5.3 Certification Levels

1. Level A NASA instructors are certified by the NASA Training and Certification Board. Level A NASA instructors have the authority to train Level B instructors, operators, and inspectors. Upon successful course completion, a certificate shall be issued.

2. Certification of Level B instructors will be provided by the supplier based on successful completion of the training by a Level A NASA instructor. Level B instructors are authorized to train operators and inspectors employed at their organization and subtier contractors.

3. Certification of inspectors shall be provided by the supplier based on successful completion of the training by a Level A NASA instructor or Level B supplier instructor. An inspector is trained and certified to inspect for conformance with the requirements of this Standard.

4. Certification of operators shall be provided by the supplier based on successful completion of the training by a Level A NASA instructor or Level B supplier instructor. An operator is trained and certified to fabricate cables and harnesses in conformance with the requirements of this Standard. When operators are certified to perform limited operations or processes, it shall be stated on the certification card.

5.4 Training Program Requirements

1. The supplier is responsible for training and certification of operators and inspectors in the crimping, cabling, and harnessing processes and associated processing equipment.

2. The supplier training program documentation shall be submitted to the procuring NASA Center as directed by the contract. A NASA Generic Crimping, Cabling, and Harnessing Training Plan from the NASA Training Centers is available for use as a guideline.

3. The training program shall:

a. Identify the criteria for qualification and certification of Level B instructors, operators, and inspectors.

b Document the methods and procedures proposed to fulfill the requirements of this Standard.

c. Utilize visual standards consisting of satisfactory work samples or visual aids that clearly illustrate the quality characteristics of interconnecting cables, harnesses, and wiring applicable to the contract.

d. Utilize applicable illustrations in this Standard, supplemented as necessary, for visual standards. Standards of unacceptable conditions may also be used for clarification or comparison.

e. Make applicable standards readily available.

5.5 Documentation

1. The supplier training program documentation shall describe the training and certification program proposed to satisfy the requirements herein for the types of cables and harnesses to be made. This description shall include the following, as applicable:

a. Qualifications of instructors.

b. Procedures for training, including who will be trained and for what purpose, (e.g., operator, inspector).

c. Lesson plan(s)/student standards.

d. Hours of instruction.

e. Procedures for certification and recertification.

f. Procedures for recording training, recertification, and method of identifying/recalling trained personnel.

g. Certification criteria.

2. Records of training and certification shall become part of the supplier's quality data and shall be retained for a minimum of 5 years.

3. Evidence of certification status, including limitations, shall be available in the work area.

5.6 Maintenance of Certification Status

1. Maintenance of certification for instructors, operators, and inspectors requires continuous proficiency.

2. Recertification of Level B instructors shall include the successful completion of retraining by a Level A NASA instructor. Recertification of operators and inspectors shall include successful completion of retraining by a Level A NASA instructor or a Level B supplier instructor.

3. Recertification shall be required when:

a. Proficiency requirements herein are not met.

(1) Instructors - proficiency unacceptable.

(2) Operators - unsatisfactory quality of articles fabricated.

(3) Inspectors - unsatisfactory quality of inspection.

(4) Quality/quantitative data demonstrates a need for recertification.

b. New fabrication or inspection techniques have been approved that require different skills.

c. Work period interruption of greater than 6 months occurs.

d. Two years has elapsed since last certification.

4. Certification shall be revoked when:

a. Certificate holder fails recertification.

b. Certificate holder fails to meet visual acuity requirements of paragraph 5.2.

c. Employment is terminated.

d. Supplier training program fails to meet requirements set forth herein or set forth otherwise in the contract.

5.7 Training Resources

1. Training of Level B instructors is available at either the Goddard Space Flight Center (GSFC) or Jet Propulsion Laboratory (JPL). The NASA Generic Crimping, Cabling, and Harnessing Training Plan will be supplied to instructors at the time of course completion.

a. GSFC
Training Center
Code 300.1
7000 Columbia Gateway Dr.
Columbia, MD. 21046
(301)731-8632
FAX (301)731-8628

b. JPL
Training Center
MS83-204
4800 Oak Grove Drive
Pasadena, CA 91109
(818)354-6730
FAX (818)393-0090

2. Suppliers may train operator or inspector personnel in-house for certification or recertification utilizing certified instructors and approved training programs, or arrange for this training at one of the NASA-conducted schools.

3. A fee is required. Contact either training center for information.

CHAPTER 6 - FACILITIES, EQUIPMENT, MATERIALS, AND PARTS

6.1 Facility Cleanliness

The work area shall be maintained in a clean and orderly condition. Smoking, eating, and drinking at individual work stations shall not be permitted. Nonessential tools and materials shall not be permitted at the work station.

6.2 Environmental Conditions

1. **Controlled Environment.** The cabling and wiring area shall have a controlled environment, which limits the entry of contamination. The temperature and humidity of this area shall be monitored, documented, and maintained within the limits defined as the comfort zone in Figure 6-1

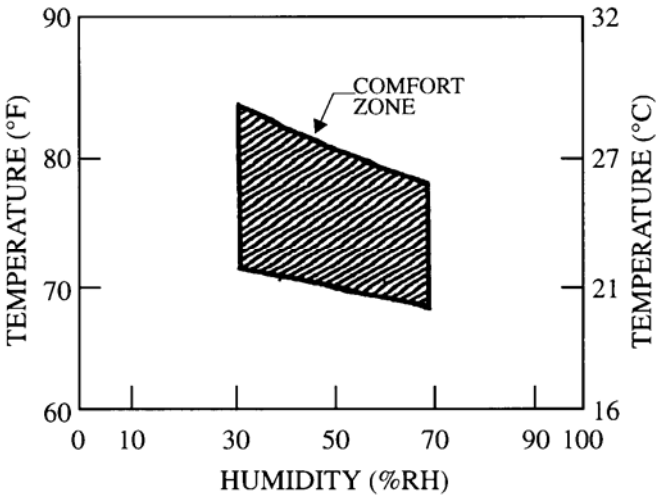

Figure 6-1. Comfort Zone--Temperature Versus Humidity Requirements

2. **Special Environmental Requirements.** Parts or equipment being processed that require more stringent control of environmental conditions than those stated above shall have these requirements and controls identified and specified in the engineering documentation.

3. **Ventilation System.** Areas used for cleaning parts, and areas where toxic or volatile vapors are generated, shall have a ventilation system for removing air contaminants. The ventilation system shall comply with the recommendations and guidelines of the Occupational Safety and Health Administration (OSHA) requirements, 29 CFR Part 1910.

4. **Field Operations Requirements.** In field operations where the required controlled conditions cannot be effectively achieved, special precautions shall be taken to minimize the effects of the uncontrolled environment on the operation being performed on the hardware. These precautions shall be identified in the appropriate documentation.

5. **Lighting.** Light intensity shall be a minimum of 1077 lumens per square meter (lm/m^2) (100 foot-candles) on the surface where cabling and wiring are being assembled, inspected, or tested. Supplemental lighting may be used to achieve the required lighting levels.

6.3 Tool and Equipment Control

1. Each supplier shall:

a. Select tools to be used for crimping, cabling, wiring, and in work preparation areas appropriate to the intended function.

b. Clean and properly maintain all tools and equipment.

c. Examine all elements of tools, used in cabling, for physical damage.

d. Prohibit unauthorized, defective, or uncalibrated tools in the work area.

e. Document detailed operating procedures and maintenance schedules for tools and equipment requiring calibration or set ups. Maintain records of tool and equipment calibration and functional testing.

2. The supplier shall have a documented calibration system in accordance with ANSI/NCSL Z540-1-1994. The minimum standard shall be:

a. Measurement standards used for calibrating tools shall be traceable to National Institute of Standards and Technology (NIST). Calibration of tools shall be performed in an environment compatible with the environmental requirements of the tools.

b. Calibration intervals shall be based on the type of tool and records of the tool's calibration. Intervals may be lengthened or shall be shortened on the basis of stability demonstrated over previous calibration periods.

c. Procedures shall be generated and utilized for the calibration of all tooling stated herein. Procedures shall include, as a minimum, standards to be used, parameters to be measured, accuracy, tolerances, environmental factors, and steps in the calibration process. The procedures may be the manufacturer's specifications if judged adequate, and need not therefore be rewritten, but shall be documented.

d. Records shall be maintained that document the calibration.

e. Tools shall be labeled to indicate, as a minimum:

(1) Date of calibration.

(2) Calibration due date.

(3) Any limitation of use. If not practical to place the label directly on the tool, then the label shall be affixed to the tool container.

(4) The identification of the organization performing the calibration.

(5) Tool identification.

(6) Traceability on the tool to the container if the container contains the calibration label.

f. Power tools used during the cabling process shall comply to the tool requirements herein and have a three-wire grounded power cord or be double insulated. The area making contact with the workpiece shall be grounded. When measured from the workpiece contact point to ground, the resistance shall not exceed 2.0 ohms and the potential difference shall not exceed 2 millivolts Root Mean Square (RMS) using methods indicated in the supplier's engineering documentation.

3. The supplier's process documentation for tool control is subject to review and approval by the procuring NASA Center. Suppliers may elect to use tools not mentioned in this Standard provided the engineering documentation is reviewed and approved by the procuring NASA Center prior to use.

6.4 Electrostatic Discharge Requirements

The supplier shall implement an electrostatic discharge (ESD) Control Program for any activity that tests, inspects, services, manufacturers, installs, packages, labels or otherwise processes ESD sensitive parts or assemblies. ESD requirements shall be in accordance with NASA-STD-8739.7 or other approved ESD control procedures. All personnel who handle static-sensitive parts and assemblies shall have been trained in the proper procedures and in the use of appropriate protective equipment to prevent ESD damage.

6.5 In-Process Storage and Handling

Each supplier performing cabling and harnessing operations shall develop and implement requirements and procedures that control conditions to prevent damage to and degradation of parts and deliverable terminating areas, terminals, connectors, wire ends, or part leads during handling and storage. Containers shall be compatible with materials stored therein.

6.6 Wire Processing and Preparation Tools

The supplier shall select and use the following conductor preparation tools:

1. **Strippers**. Either precision mechanical tools or thermal strippers shall be selected for insulation stripping. Thermal strippers shall have variable temperature control. The tools shall not nick, ring, gouge, or stretch conductors or remove plating so that the base metal shows. Superficial scraping of conductors is acceptable providing conductor base material is not exposed.

2. **Wire Cutters**. Wire cutting tools that shear the conductor shall be selected in preference to diagonal cutters that cut the conductor by bringing two blade edges together. The cutting edges of wire trimming tools shall be maintained sharp and free from nicks and indentations.

3. **Torque Tools**. Torque tools shall be calibrated and shall utilize drive sockets and attachments appropriate for the hardware being torqued.

6.7 Inspection Optics

Visual inspection shall be performed using magnification aids conforming to the following:

1. Inspection magnification aids that permit simultaneous viewing with both eyes are preferred, but single eye viewing devices are acceptable.

2. Magnification aids shall be capable of rendering true colors, proportional dimensions, and adequate resolution at the chosen magnification to perform the specified inspection.

3. The light source shall provide shadowless illumination of the area being viewed.

6.8 Materials Selection

All materials used in vacuum or low-pressure compartments shall not release greater than 1.0 percent total mass loss (TML) and 0.1 percent collected volatile condensable material (CVCM) when tested in accordance with ASTM-E-595. All materials used in habitable areas of spacecraft, stowed equipment, and experiments shall be evaluated for flammability, odor, and offgassing characteristics in accordance with NASA-STD-6001. Materials used shall be subjected to NASA approval. All material shall be selected to conform to the project contamination control requirements plan.

6.9 Solvents and Cleaners

1. **Solvent Requirements.** Solvents shall be nonconductive and noncorrosive and shall not dissolve or degrade the quality of parts or materials. Solvents shall be properly labeled and shall be maintained in a clean and uncontaminated condition. Solvents showing evidence of contamination or decomposition shall not be used. Solvents and cleaners shall not leave a residue or contamination in parts or materials. Refer to the Material Safety Data Sheets (MSDS) for proper handling of solvents.

2. **Acceptable Solvents.** The following solvents are acceptable when used for cleaning connectors, hardware, and other materials and parts in cables and harnesses. Other solvents require approval of the procuring activity prior to use.

   a. Ethyl alcohol, 0-E-760, Types III, IV, or V.

   b. Isopropyl alcohol, TT-I-735.

3. **Part Marking Permanency**. Solvent and cleaning systems have the potential of removing marking information from parts. Appropriate marking permanency testing shall be performed as part of the evaluation procedure for any solvent or cleaning system.

<u>WARNING:</u> ***SOLVENTS USED IN THE HARNESS AND CABLE MANUFACTURING PROCESS CAN BE HAZARDOUS AND VOLATILE. THESE MATERIALS SHALL BE USED IN ACCORDANCE WITH THE RECOMMENDATIONS AND GUIDELINES OF THE INDUSTRIAL VENTILATION MANUAL OF RECOMMENDED PRACTICES AND THE OCCUPATIONAL SAFETY AND HEALTH ADMINISTRATION (OSHA), 29 CFR.***

6.10 Personnel Protection

Personal protective equipment shall be provided as appropriate for the work being performed. Protective equipment shall comply with the requirements of OSHA, 29 CFR Part 1910.

CHAPTER 7 - DESIGN PRACTICES

7.1 General

Connectors, wires, and hardware shall be selected from MIL-STD-975 or as specified by the contract. Harness design shall make provision for special performance requirements of any specific harness section (e.g., ease of bending, flexibility in twisting, electrical isolation, and ability to fit into confined spaces). Design considerations should include protective devices such as heat-shrinkable sleeving for protection, stress relief, electrical insulation, and identification purposes.

Precautions shall be taken to prevent the mismating of connectors, caused by interchanging or by reversing, through one of the following techniques:

1. Use of constraints that locate similar connectors built into interconnecting cables and harnesses so they cannot be interchanged.
2. Selection of different sizes for connectors to be located adjacent to each other.
3. Polarization or dissimilar keying of adjacent, similar connectors.
4. Ensure clarity in marking and coding connectors.
5. Use of confidence loop circuits to check out proper mated positions.

7.2 Requirements Not Covered

Other processes, such as potting and molding, not covered by this document may be required to fabricate cables and harnesses. The design, materials, and processes shall be defined in engineering documentation.

7.3 Design Considerations

The following considerations shall be taken in any interconnecting cable or harness design and incorporated into the design as applicable:

1. Current and voltage derating of conductors as determined by MIL-STD-975 or as specified in the engineering documentation.
2. Voltage drop considerations.
3. Availability of spare connector contacts (facilitates circuitry changes).
4. Properties of wire insulation, lacing tape, braid sleeving, plastic strap, wrap sleeving, and plastic tubing (processibility, flammability, arc tracking resistance, vacuum stability, resistance to heat, cold flow, etc.) as appropriate for the application. Plastic straps should have metal tangs that lock securely into the "ribbed" portion of the straps.
5. Tin-plated parts (e.g., terminals, crimp barrels, etc.) must be fused or alloyed with tin-lead plating.

6. Methods of identifying cables, connectors, and wires and their effects on environmental requirements.

7. Radio frequency interference/electromagnetic interference (RFI/EMI) shielding requirements.

8. Operation of circuits through critical pressure (require that potentials in excess of 200 Vac or 300 Vdc be terminated in a single-contact, high voltage connector).

9. Electrical wiring of redundant systems, redundant subsystems, or redundant major elements of subsystems shall not be routed in the same bundle or through the same connector with wiring of the other system, subsystem, or subsystem element.

10. Separate handling of radio frequency (RF) signals in coaxial cable and RF connector assemblies.

11. Materials and wiring design to meet NASA-STD-6001, Flammability, Odor, Offgassing and Compatibility Requirements and Test Procedures for Materials in Environments that Support Combustion.

12. American wire gage (AWG) 24 wire size and larger is preferred for conductors in interconnecting cable and harness assemblies, including coaxial or triaxial cables. High strength copper alloy shall be used for AWG 24 and smaller conductors. When high strength copper alloy wire is used, a magnetic survey of the installation shall be conducted if project requirements indicate a sensitivity to magnetic interference.

13. Torque values applicable for connectors, backshells, and other hardware.

14. Route and support harnesses and cables so that they are protected from abrasion, cold flow, cut through, vibration, chafing, flexing, and sharp edges.

15. Design minimization of splicing.

16. Protection of all electrical terminations to withstand the operating environment.

17. Preconditioning using thermal cycling prior to preparation for connectorization in high frequency applications using semi-rigid coaxial cable. This procedure should also be considered for longer runs of flexible coaxial cable.

18. Confining line voltages to connectors with sockets to preclude exposing voltage points when connectors are disconnected.

19. Specifying the use of sealing plugs and unused contacts in environmental connectors.

20. Fabricate cables containing discrete wires in one or more layers by winding the wires together uniformly. Whether successive layers are twisted contrahelically or unidirectionally is optional. Winding shall prevent the introduction of residual twist into individual conductors. The length of lay for each layer shall be between 8 and 16 times the outer diameter of the harness.

21. The bend radius data given in Table 7-1 shall apply for bending that occurs in the installed interconnecting harness or cable.

22. Wires exiting from connectors shall be stress relieved.

23. The use of solder sleeves (where wire insulation temperatures permit), hand soldering, or crimp rings are acceptable for terminating individual shields.

24. Concern for placement of power and ground lines in contact assignments for system safety.

25. Materials for potting connectors suited for applications.

26. Selection of metal braid shielding should be sized as appropriate per application.

Table 7-1. Bend Radii for Completed Interconnecting Cable or Harness

Wire Type	Optimum Bend Radius	Minimum Bend Radius
Individual coaxial cable.	10 x OD 1/	6 x OD
Polyimide (Kapton) insulated	15 x OD	10 x OD
Overall harness (with coaxial cable or AWG size 8 or larger).	10 x OD	6 x OD
Overall harness (with AWG size 10 or smaller without coaxial cable).	10 x OD	3 x OD
Overall harness (with polyimide insulated wires included).	15 x OD	10 x OD

1/Outside Diameter

THIS PAGE INTENTIONALLY LEFT BLANK

CHAPTER 8 - INTERCONNECTING CABLE/HARNESS FIXTURING

8.1 General

Layout and fixturing shall be provided for all complex interconnecting cables and harnesses. Permanent bends and offsets shall be built into harnesses so that the final wire dress will not be under continuous stress and tension after installation. Connector back shells shall accommodate bends and offsets in wire harnesses, as appropriate, to avoid continuous stress. Additionally, the layout shall be designed to limit the amount of bending, pulling, and other handling a harness will receive during installation.

8.2 Mockup and Wiring Board Design Parameter

Wiring boards and other mockups shall be constructed full size, 3-dimensional, and shall account for all the physical restraints the interconnecting harness or cable will encounter. Typical harness board layout and typical hardware and fixtures are shown in Figures 8-1 and 8-2, respectively.

8.3 Temporary Identification

Temporary identification markers may be used for in-process identification requirements. All temporary markers shall be removed from completed cabling and harnessing. The markers shall not leave a contaminating residue.

8.4 Interconnecting Cable and Harness Protection

The supplier shall establish and implement procedures to protect interconnecting cables and harnesses from damage and degradation. Connectors not being actively assembled shall be individually protected by wrapping them in bubble pack or other physical covering. At the end of the work shift, protective covering shall be spread over the harnesses in fabrication. Harnesses not in active fabrication (those in temporary storage) shall be covered by protective covering (Electrostatic Discharge (ESD) protective covering in accordance with NASA-STD-8739.7 if Electrostatic Discharge Sensitive (ESDS) parts are utilized).

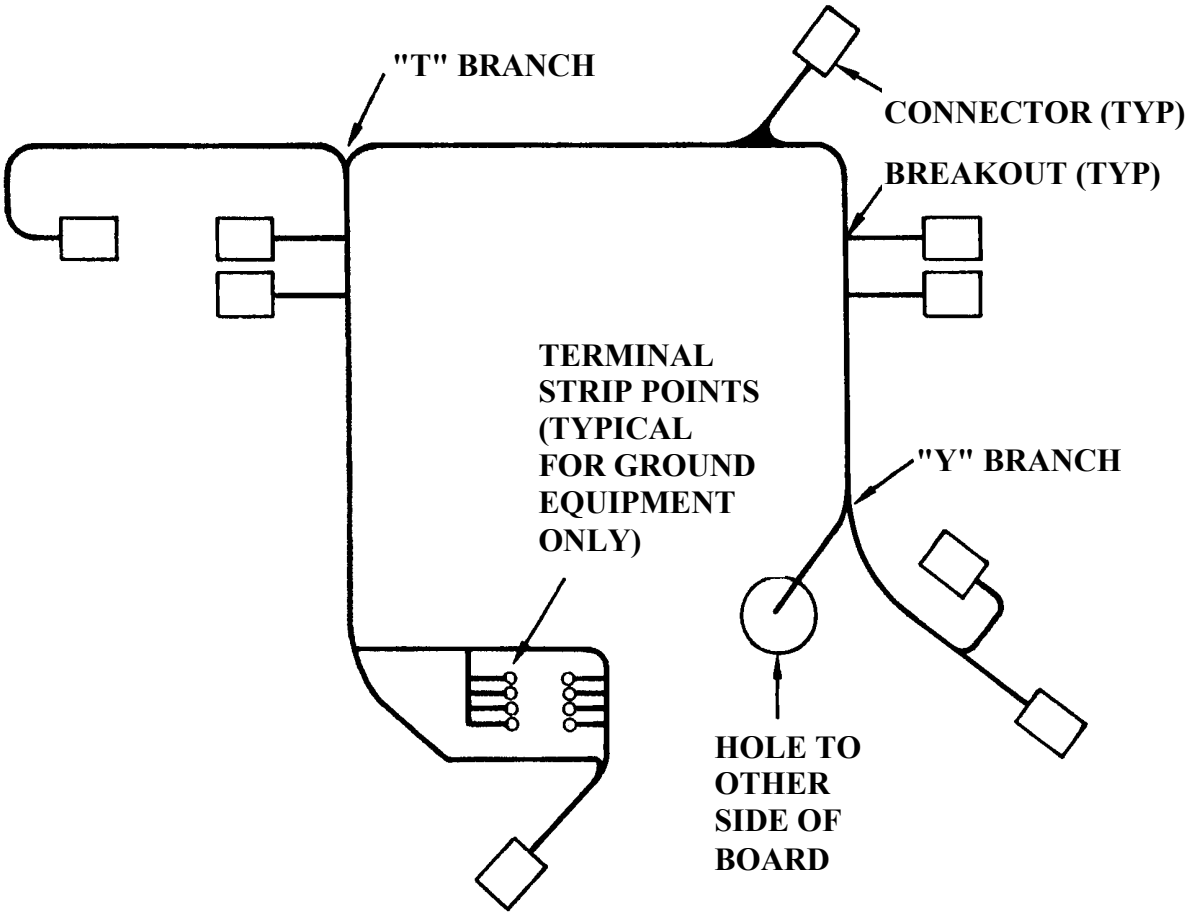

Figure 8-1. Line Drawing of Typical Harness Layout

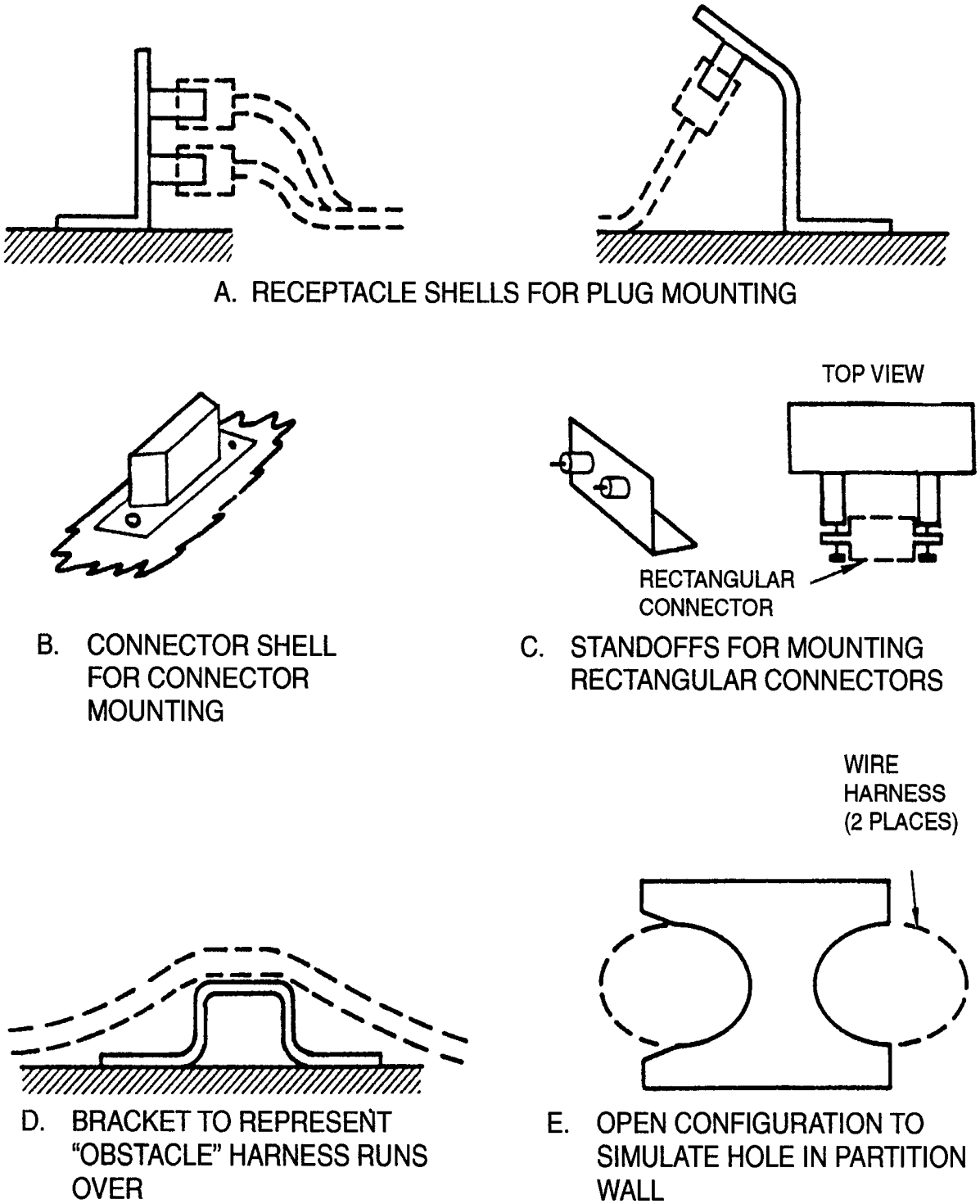

Figure 8-2. Typical Harness Board Hardware and Fixtures

THIS PAGE INTENTIONALLY LEFT BLANK

CHAPTER 9 - FORMING WIRES INTO CABLES AND HARNESSES

9.1 General

Wiring shall be assembled in interconnecting cables or harnesses as described herein. Fabrication methods and assembly techniques that assure the production of high quality interconnecting cables and harnesses shall be used.

9.2 Lacing for Trunk, Branches, and Breakouts

When engineering documents specify the use and type of lacing, the following requirements shall apply. Lacing tie-ends shall be trimmed. When knots are staked (see Figure 9-7), the necessary compounds, as well as any special design requirements, shall be specified.

1. **Starting Stitch**. Harnesses laced with single tape shall initially be tied with a starting stitch. Single-tape starting stitches shall be the same as a spot tie with a running end (see item 2 of this paragraph), or as shown in Figure 9-1 View A. Starting stitches for double lacing shall be as shown in Figure 9-1 View B. Starting stitches shall not place stress on wire terminations.

2. **Spot Ties**. Spot ties shall consist of a clove hitch followed by a square knot as shown in Figure 9-2 or other non-slip knots. See Table 9-1 for spot tie spacing.

3. **Closing Stitch**. Single or double lacing tape shall be terminated with a closing stitch as shown in Figure 9-3. Lacing shall be terminated at every major breakout or branch and at the extremity of the harness. (Major breakouts normally contain a large percentage of the wire volume, such as 25 to 30 percent or more.) The stitching shall terminate close to the extremity of the harness but shall not stress the wire terminations. Closing and starting stitches at branches and breakouts shall be next to the breakout. An alternate closing stitch method is shown in Figure 9-4. Single or small multiple breakouts of two or three wires need not have closing and starting stitches, but may have running lockstitches on each side (Figure 9-5).

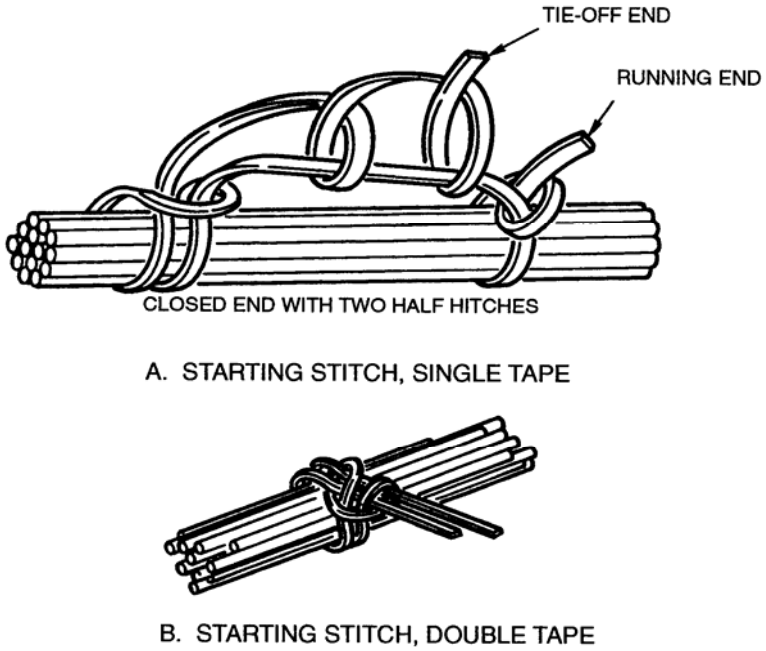

Figure 9-1. Starting Stitch

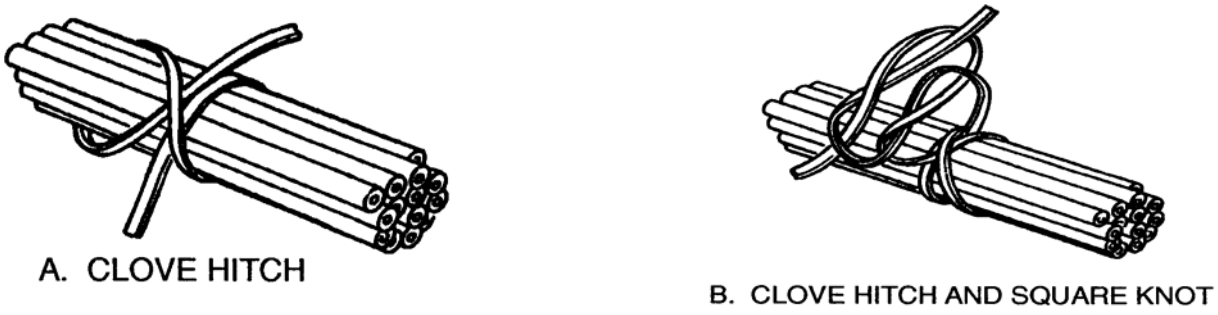

Figure 9-2. Spot Tie (Typical)

Table 9-1. Spot Tie, Plastic Strap, and Stitch Spacing Dimensions

Harness Diameter mm (Inches)	Maximum Distance Between Harness Ties mm (Inches)
6.4 (0.25) or less	19.1 (0.75)
12.7 (0.50)	38.1 (1.50)
25.4 (1.00)	50.8 (2.00)
Larger than 25.4 (1.00)	76.2 (3.00)

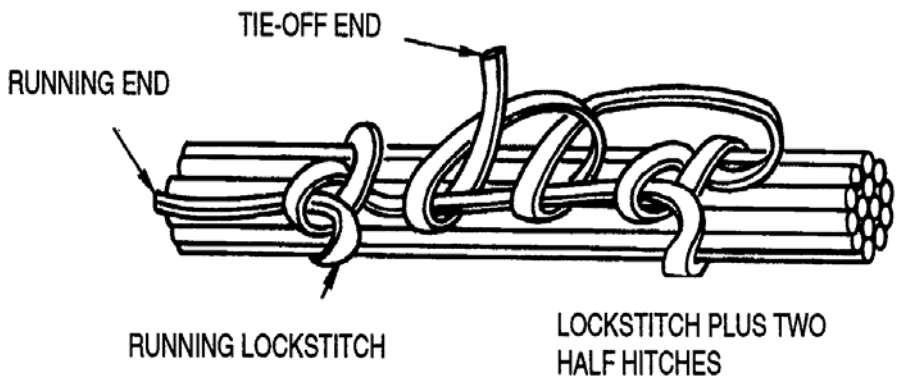

Figure 9-3. Closing Stitch and Single Tape--Illustration

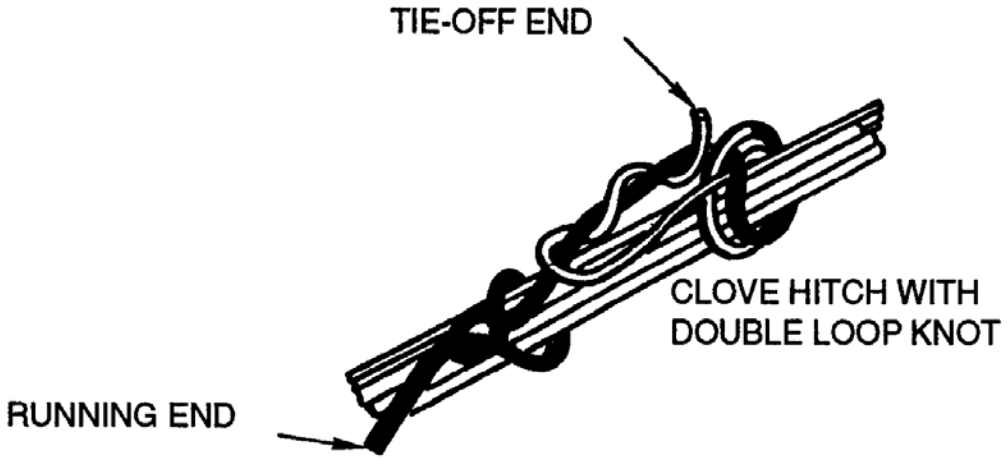

Figure 9-4. Alternate Closing Stitch and Single Tape—Illustration

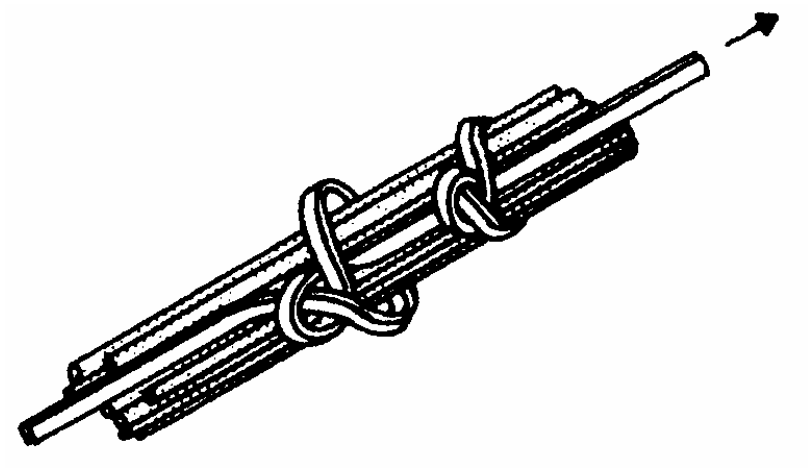

Figure 9-5. Running Lockstitch

4. **Running Lockstitch**. Continuous lacing shall be achieved using running lockstitches as shown in Figure 9-5.

5. **Stitch Spacing**. Lacing stitches and spot ties shall be placed as detailed in Table 9-1. A tie or stitch shall be placed immediately before and immediately after any breakout of the wire or cable from the harness. Dimensions from the connector or connector accessories to start of harness tie are given in Table 9-2.

Table 9-2. Distances From Connectors or Connector Accessories to Beginning of Harness Ties

Harness-Bundle Diameter mm (inches)	Distance From Connector or Connector Accessory to Start of First Tie mm (inches)
Less than 12.7 (.5)	25.4 - 50.8 (1 - 2)
12.7 to 25.4 (.5) (.5 to 1)	50.8 - 76.2 (2 - 3)
25.4 (1) or larger	76.2 - 101.6 (3 - 4)

6. **Flat Stitching**. Flat stitching shall utilize either of the stitches pictured in Figure 9-6.

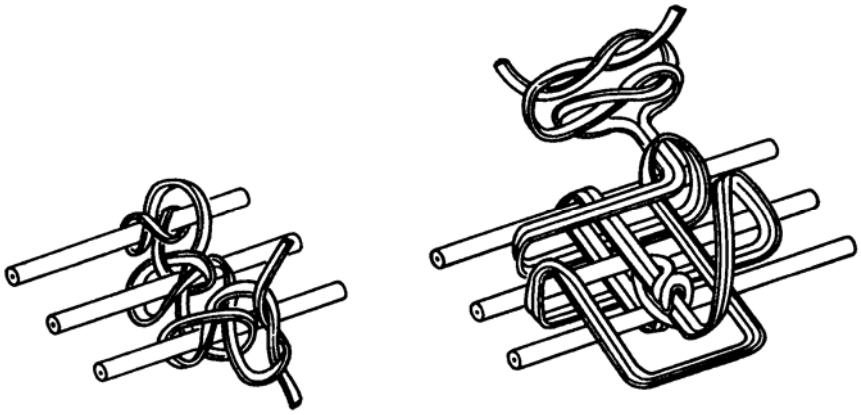

Figure 9-6. Flat Lacing Stitches

7. **Large Breakouts**. Lockstitching shall terminate with a closing stitch before each large breakout or branch of the harness. The lacing shall start anew with a starting stitch on the opposite side of the breakout on each branch.

9.3 Fabric Braid Sleeving (Prewoven)

Prewoven fabric (unvarnished) braid sleeving to be installed over the wire harness shall be slightly oversized so that it can be slid over the bundle. Braided sleeving shall be snugly dressed down over the wire bundle. Continuous braid sleeving shall be secured at the ends by plastic cable straps, spot ties, clamps, heat shrinkable sleeving, or a potting material. When secured, the covering shall not slide freely. Sleeving shall be trimmed and terminated at a breakout but shall not be punctured or slit to provide openings for breakout. After installation, braided sleeving shall be secured or treated in one of the following ways to eliminate fraying or unraveling.

1. Braided sleeving may be secured by a spot tie or plastic cable strap. The end of the braid shall be tucked under and secured with a spot tie or plastic strap (Figure 9-7).

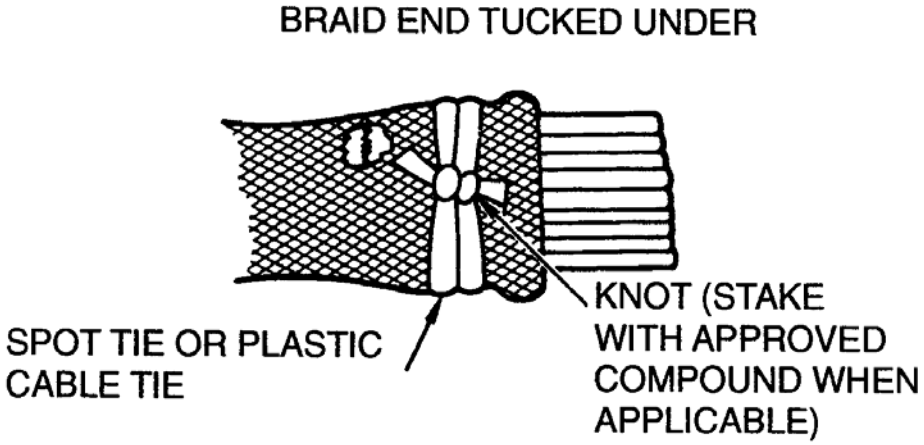

Figure 9-7. Securing Fabric Braid Sleeving

2. The end of the braid may be secured by connector clamps, other hardware, or potting.

3. The ends of glass braids may be bonded using an adhesive. Excessively frayed material shall be trimmed away prior to application of the adhesive. When the adhesive is dry, the braid shall be secured by spot tying or other means so that it does not slip on the wire bundle.

4. Polyamide (nylon) braids (for use on ground service equipment) may have their ends sealed by use of a "hot knife" or similar instrument.

9.4 Fabric Braid Directly Woven on Interconnecting Harness or Cable

Fabric braids woven directly on interconnecting harnesses or cables may be loose or tight, as necessary to produce the degree of flexibility required. The braid shall be smooth and shall provide coverage that leaves no gaps through which the wires can be seen. No frayed ends shall be visible. All pigtails shall be secured. Braids applied tightly shall not terminate so close to connectors that they stress wires attached to solder cups. Spot ties, plastic straps, lacing, and other temporary holding means shall be removed from wire bundles prior to braid application. Flat tapes may be left under braid if the tape has a low profile. Typical braiding techniques are

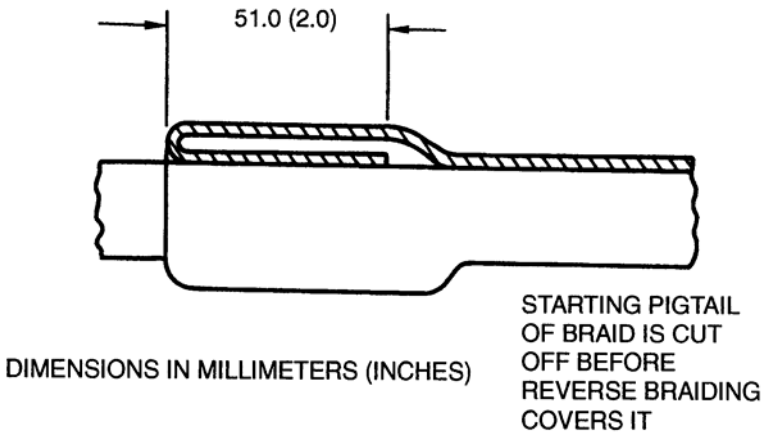

shown in Figures 9-8, 9-9, and 9-10.

Figure 9-8. Starting Lock

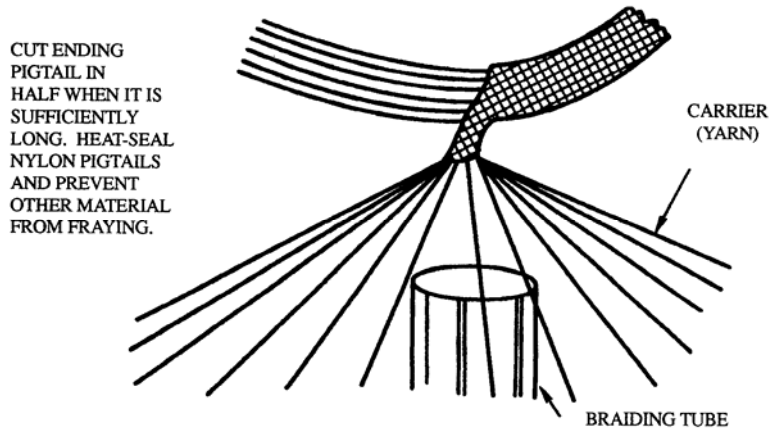

Figure 9-9. Forming Ending Pigtail

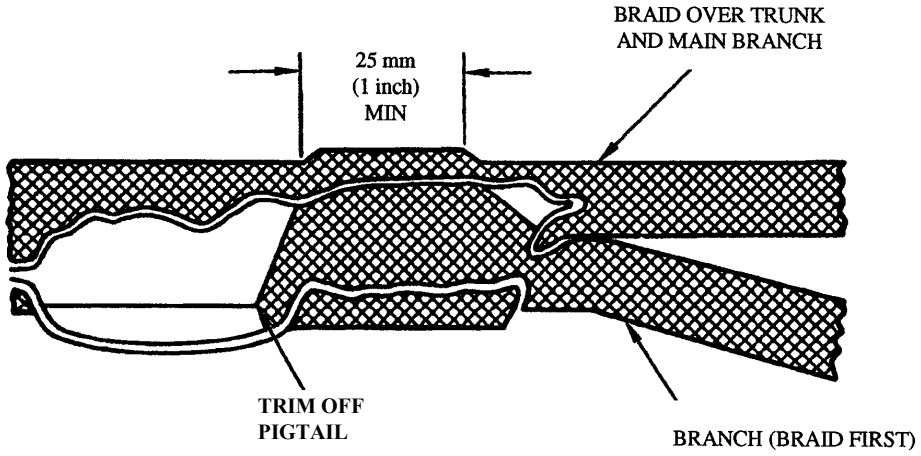

Figure 9-10. Braiding at a Breakout or Y Intersection

9.5 Spiral Wrap Sleeving

Spiral wrap sleeving shall be installed to make firm contact with the wire bundle. The ends of the spiral wrap shall be trimmed to eliminate sharp edges or points that might damage the insulation. The sleeving may be butted or applied as an open spiral, but shall not be overlapped (Figure 9-11). When spiral sleeving is applied, the ends of the wire bundle shall be secured by the tie wraps or by other means (see paragraphs 9.2 and 9.3-2).

NOTE: ***DO NOT USE SPIRAL WRAP SLEEVING ON SPACECRAFT OR LAUNCH VEHICLES.***

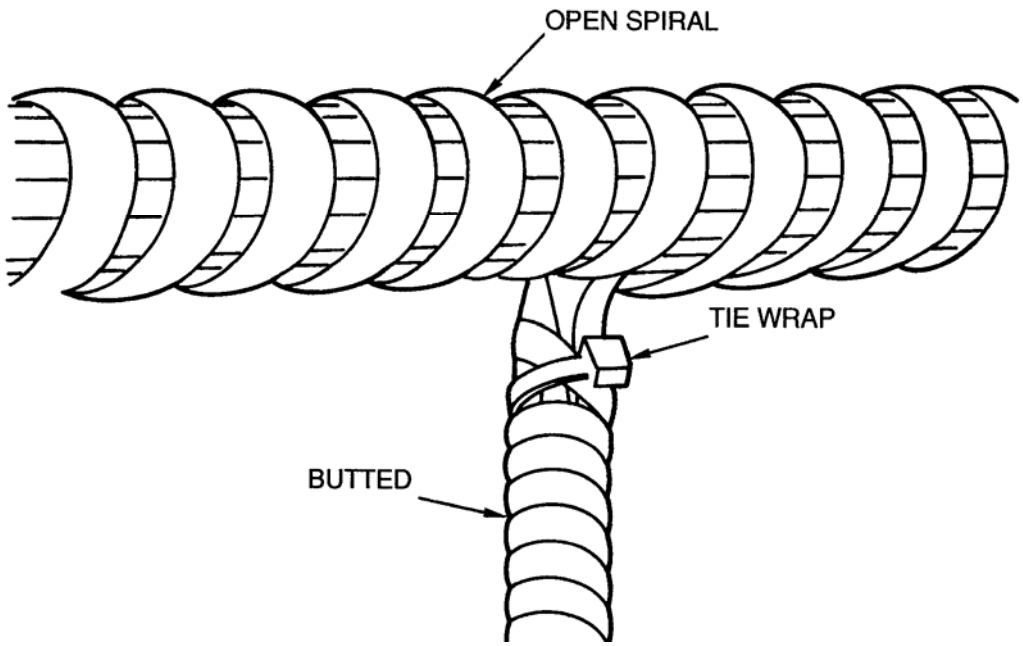

Figure 9-11. Spiral Wrap Sleeving

9.6 PLASTIC STRAPS

1. Installed straps shall be locked to prevent them from loosening or opening. Straps shall be placed on both sides of a breakout; otherwise, spacing between straps shall be as required by Table 9-1. The "ribbed" side of a strap shall always be placed against the wires. Straps shall be tightened so that they do not slide back and forth on the assembly; however, they shall not be so tight as to cause noticeable indentation or distortion of the wires in the harness. Proper strap orientation is shown in Figure 9-12.

2. Plastic straps are usually installed by tooling. Tooling shall be tension-controlled to meet the strap-tightening requirements previously stated. Surplus strap ends shall be trimmed flush at the back end of the strap head (this is done automatically by most tooling).

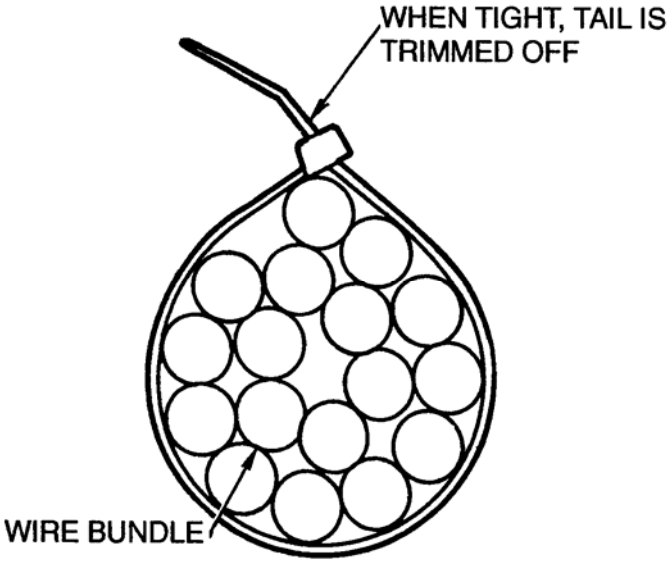

Figure 9-12. Plastic Strap Orientation

9.7 Metal Braid Shielding

Metal braid shielding can either be woven directly over a core or obtained in prebraided form and installed by sliding it over the wire bundle. To prevent potential damage (cold flow) of the underlying wire insulation, a separator (e.g., a tape) shall be applied over the wire bundle to give the wire continuous protection. Prewoven braiding shall be tightened down to contact the wire bundle. Braids shall be terminated as specified by the engineering documentation. Prewoven metallic braid shall be cleaned in a suitable solvent to remove contamination prior to installation over the harness (see Chapter 15).

9.8 Insulation Sleeving/Tubing

Insulation sleeving shall be installed on all terminations that are not otherwise insulated or potted, except those at ground potential (e.g., overall shield and coaxial cable terminations). Sleeving shall be installed to meet the dimensional requirements of the applicable drawing or specification.

1. **Heat-Shrinkable Sleeving**. The heat-shrinkable sleeving selected shall be larger than the maximum diameter of the object being covered, and after shrinking it shall provide a tight fit over the object in the area of maximum diameter. This will cause the sleeving to have a tight mechanical grip on the item it covers. A guide for selecting sleeving sizes is given in Table 9-3. There shall be no partially or incompletely shrunken areas. Sleeving may have a slight surface crazing, but it shall be free of cracks, punctures, and charred or burned areas.

2. **Tubing**. Tubing shall be secured by spot ties or otherwise restrained to prevent them from sliding back and forth over the wire bundle.

Table 9-3. Selection Guide for Use of Polyolefin and Polyvinylidene Fluoride Sleeving 1/mm (inches)

I.D. As Supplied	I.D. Recovered (After Heating)	Cable Diameter	Sleeving Size
1.2 (0.046)	0.6 (0.023)	0.30 to 0.70 (0.01 to 0.026)	1.2 (3/64)
1.6 (0.063)	0.8 (0.031)	0.71 to 1 (0.028 to 0.038)	1.6 (1/16)
2.4 (0.093)	1.2 (0.046)	1.01 to 1.40 (0.039 to .0.54)	2.4 (3.32)
3.2 (0.125)	1.5 (0.061)	1.41 to 2.00 (0.055 to 0.077)	3.2 (1/8)
4.7 (0.187)	2.4 (0.093)	2.01 to 2.80 (0.078 to 1.109)	4.8 (3.16)
6.4 (0.250)	3.2 (0.125)	2.81 to 4.00 (0.110 to 0.156)	6.4 (1/4)
9.5 (0.375)	4.7 (0.187)	4.01 to 5.50 (0.157 to 0.218)	9.5 (3/8)
12.7 (0.500)	6.4 (0.250)	5.51 to 7.90 (0.219 to 0.312)	12.7 (1/2)
19.1 (0.750)	9.5 (0.275)	7.91 to 11.10 (0.313 to 0.437)	19.1 (3/4)
25.4 (1.000)	12.7 (0.500)	11.11 to 15.90 (0.438 to 0.625)	25.4 (1)
38.1 (1.500)	19.1 (0.750)	15.91 to 22.2 (0.626 to 0.875)	38.1 (1-1/2)
50.8 (2.000)	25.4 (1.000)	22.21 to 31.80 (0.876 to 1.250)	50.8 (2)
76.2 (3.000)	38.1 (1.500)	31.81 to 44.50 (1.251 to 1.750)	76.2 (3)
101.6 (4.000)	50.8 (2.000)	44.51 to 63.5 (1.751 to 2.500)	101.6 (4)

1/ The 2 to 1 shrink ratios shown apply to commonly used polyolefin sleeving (MIL-DTL-23053/5 and /6) and polyvinylidene fluoride sleeving (PVDF) (MIL-DTL-23053/8). Other shrink sleeving such as fluorinated ethylene propylene (FEP) (MIL-DTL-23053/11), polyethylene terephthalate (PET) (MIL-DTL-23053/7), and extruded polytetrafluoroethylene (PTFE) (MIL-DTL-23053/12) have different shrink ratios, and the applicable specification should be consulted.

9.9 Installation of Heat-Shrinkable Sleeving

After the sleeving has been placed over the object to be covered, it shall be heated and shrunk using a hot air gun, an oven, or radiant heating. The degree of heat used and the exposure time will depend on the size and type of sleeving. A typical shield termination is shown in Figure 9-13. Sleeving coverage dimensions are given in this figure. If a tight fit is required for the minimum diameter, additional sleeving may be required.

CAUTION: ***EXTREME CARE SHALL BE EXERCISED TO ASSURE THAT THE AMOUNT OF HEAT APPLIED IS NOT DETRIMENTAL TO THE OBJECT BEING COVERED. WHEN OTHER TEMPERATURE-SENSITIVE MATERIALS AND PARTS ARE IN THE VICINITY, THEY SHALL BE PROTECTED FROM EXPOSURE TO DIRECT HEAT.***

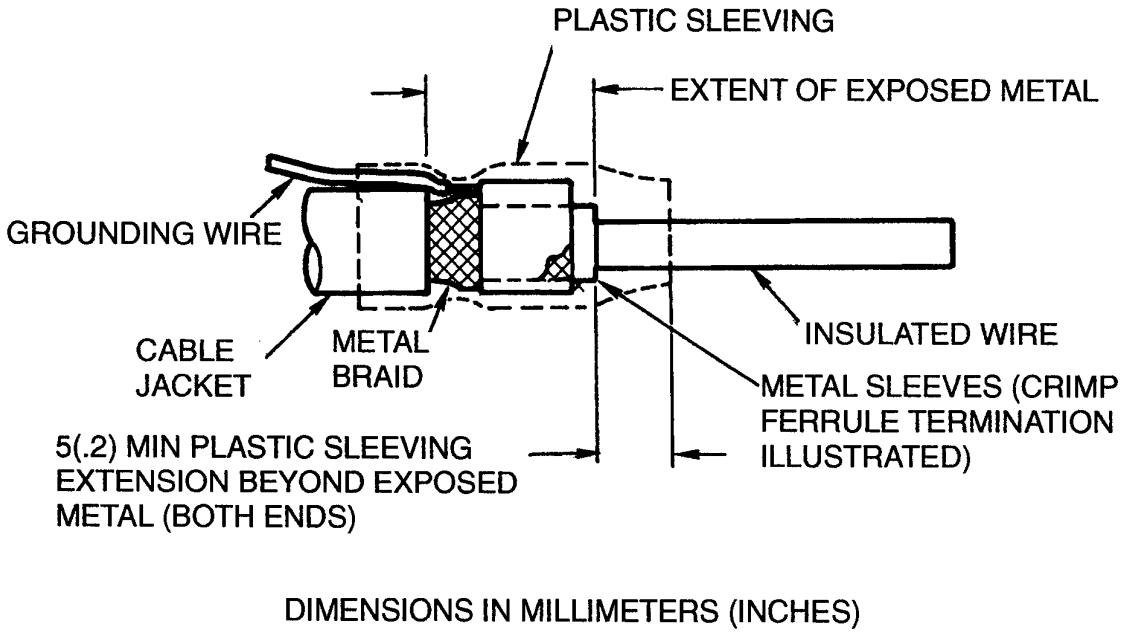

Figure 9-13. Illustration of Shrink Sleeve Installation (Typical)

9.10 Long Lengths of Shrinkable Sleeving

Long lengths of shrinkable sleeving installed over interconnecting harnesses and cables shall provide protective coverage of the designated area without leaving residual stress in the material. The sleeving shall be in contact with the interconnecting harness or cable along its length. One method of controlling endwise shrinkage (reduction in length) of the sleeving during installation is shown in Figure 9-14.

NOTE: ***MEDIUM TO LONG LENGTHS OF HARNESSES/CABLES WITH SHRINK SLEEVING ARE EXTREMELY DIFFICULT TO BEND AND COIL WITHOUT DAMAGE.***

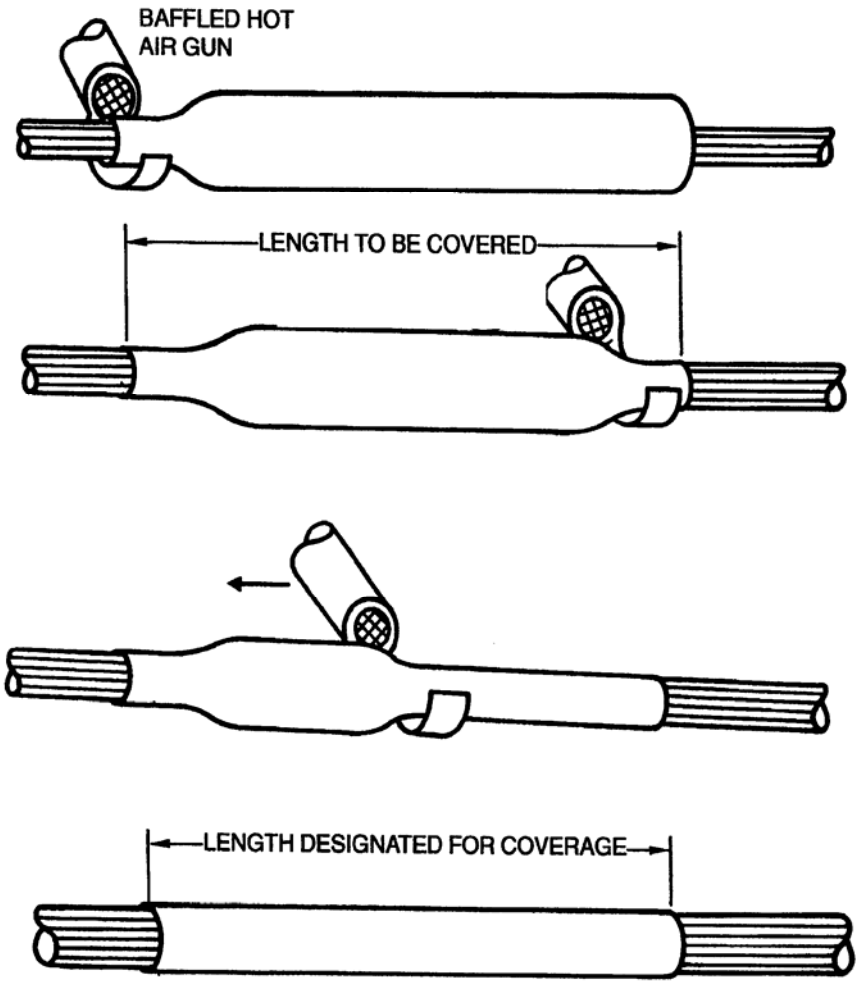

Figure 9-14. Installation of Long Lengths of Sleeving to Achieve Controlled Dimensions

9.11 SHRINKABLE PART REQUIREMENTS AND INSTALLATION

1. Shrinkable parts shall meet the following requirements (see Figure 9-15 for typical sleeving installation):

a. They shall be uniformly shrunk to assure a tight fit where required.

b. The part shall be positioned according to drawing or specification requirements.

c. The shrinkable sleeving shall firmly grip the item over which it has been installed.

d. The shrinkable part shall be free of cracks, punctures, blisters, and burned areas.

2. When shrinkable parts are installed, the gripping section of the part is shrunk first. (For example, the gripping-end section of a connector backshell boot is shrunk over the connector before the smaller cable-gripping end is heated.)

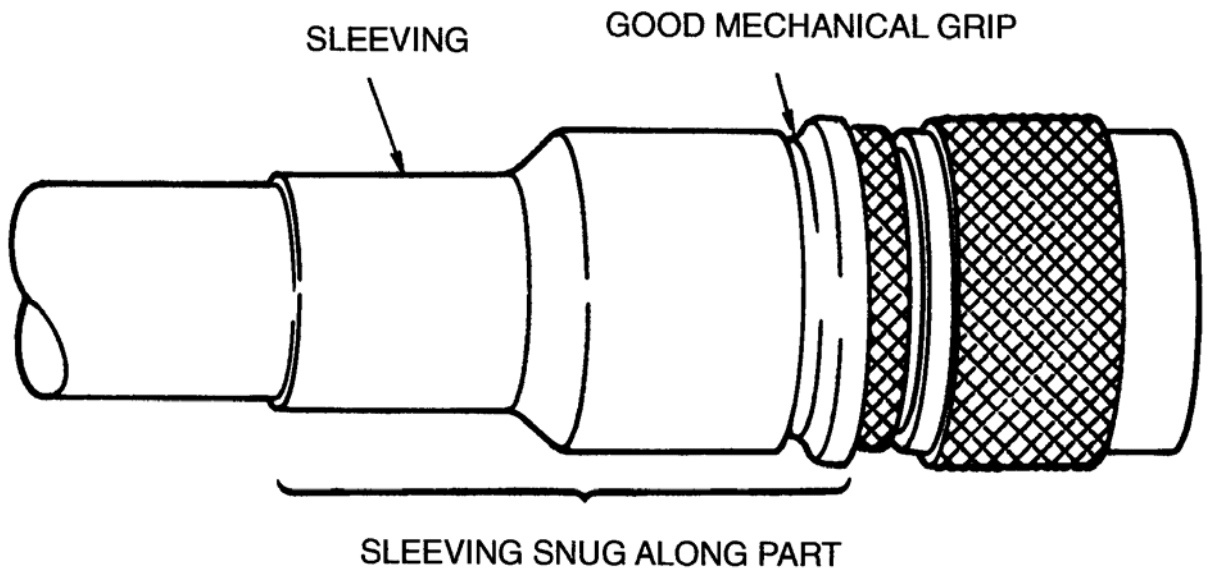

Figure 9-15. Sleeving Installation (Typical)

CHAPTER 10 - STRIPPING INSULATION FROM CONDUCTORS AND CABLE

10.1 Stripping Round Conductors

Insulated wires shall be prepared in accordance with the following requirements:

1. **Insulation Removal**. Stripping tools, used to remove conductor insulation shall be of the correct size and in correct adjustment and/or calibration. The stripping tools shall be in compliance with paragraph 6.6.1.

2. **Damage to Insulation**. After removal of the insulation segment, the remaining conductor insulation shall not exhibit any damage such as nicks, cuts, crushing, or charring. Conductors with damaged insulation shall not be used. Scuffing from mechanical stripping or slight discoloration from thermal stripping is acceptable.

3. **Damage to Conductors**. After removal of the conductor insulation, the conductor shall not be nicked, cut, or scraped to the point that base metal is exposed. Conductors that were reduced in the cross-sectional area shall not be used.

4. **Wire Lay**. The lay of wire strands shall be restored as nearly as possible to the original lay if disturbed. The conductor shall be cleaned following restoration to the original lay.

5. **Tinning of Conductors for Solder Cups**. The portion of stranded wires that will eventually become a part of the finished solder connection shall be coated with tin-lead solder and cleaned prior to attachment. Additional flux may be used. The flux shall be applied so that it does not flow under the insulation except for traces carried by solder wicking. Flux shall be removed with cleaning solvent applied so that its flow under the conductor insulation is minimal (by avoiding use of excessive solvent and positioning the conductor so that the gravity keeps the solvent from flowing under the insulation). Flow (wicking) of solder along the conductor is permitted but shall not mask the conductor strands at the termination end of the insulation.

NOTE: ***FOR ADDITIONAL REQUIREMENTS, SEE THE LATEST REVISION OF NASA-STD-8739.3.***

6. **Insulation Irregularity**. Mechanical or thermal stripped insulation irregularity is acceptable if it does not exceed 1/4 of the outside diameter of the wire, including the insulation.

7. **Insulation Clearance**.

a. Soldered Connections.

(1) **Minimum Insulation Clearance**. The insulation shall not be imbedded in the solder joint. The contour of the conductor shall not be obscured at the termination end of the insulation.

(2) **Maximum Insulation Clearance**. The insulation clearance shall be less than two wire diameters, including insulation, but in no case shall permit shorting between adjacent non-electrically common conductors. Insulation clearance shall be referenced from the first point of contact of the conductor to the terminal.

b. Crimped Connections.

(1) **Minimum Insulation Clearance**. The minimum insulation clearance for all crimped connections is 0.25mm (0.01in.).

(2) **Maximum Insulation Clearance**. The maximum insulation clearance for conductors 20AWG and smaller is 0.75mm (0.03in.). The maximum insulation clearance for conductors 18AWG and larger is 1.25mm (0.05in.).

10.2 Stripping Jackets Over Shields

Jackets over shields may be stripped by either thermal or mechanical means. Nicked shield strands shall not exceed 10 percent of the total number of strands. There shall be no severed strands.

10.3 Stripping Flat Conductor Cable

Flat conductor cable shall be stripped by mechanical means. Conductors shall not be nicked, gouged, necked down, or severed during stripping. After removal of the insulation segment, the remaining conductor insulation shall not exhibit any damage such as nicks, cuts, or crushing. Scuffing from mechanical stripping is acceptable.

CHAPTER 11 - CABLE SHIELDING AND SHIELD TERMINATION

11.1 General RFI/EMI Practices

Interconnecting cables and harnesses shall be designed and constructed to minimize electromagnetic couplings between wires within the assembly that are sensitive to induced interference. On RF signal cables, both the inner conductor and outer conductor braid shall be electrically continuous. Methods by which program isolation requirements can be achieved are listed in the following text.

1. **Isolation of Signals**. Signals can be isolated by using separate connectors and wire harnesses. When a combination of signals passes through a single connector, wires carrying similar signals can be grouped together and laced separately in the harness.

2. **Wire and Cable Types.** RFI/EMI caused by coupling of external fields can be reduced in harnesses by careful selection of wire types that provide control of radiated fields. Listed in order of increasing control are:

   a. Twisted pairs.
   b. Shielded wires.
   c. Single-braid coaxial cable.
   d. Double-braid coaxial cable.
   e. Triaxial cable.

3. **Overall Shielding of Interconnecting Cable and Harness**. Copper braid is the most effective RF shielding. Copper-clad steel-core wire, woven into a flat braid, is also effective shielding material.

11.2 Shield Termination

Shields shall be terminated using one or more of the following methods:

1. Overall shielding using conductive RFI/EMI backshell adapters.
2. Individual shields using solder sleeves.
3. Individual shields using two-piece crimp rings.
4. Large compression ring grounding or bands.
5. Floating shield.

11.3 Terminating Overall Shielding Using RFI/EMI Adapters

Overall shielding may be terminated to the connector shell through special connector accessories (Figure 11-1). Continuity from the connector, through the adapter, to the shield braid is usually made by screwing threaded parts together to predetermined torque values.

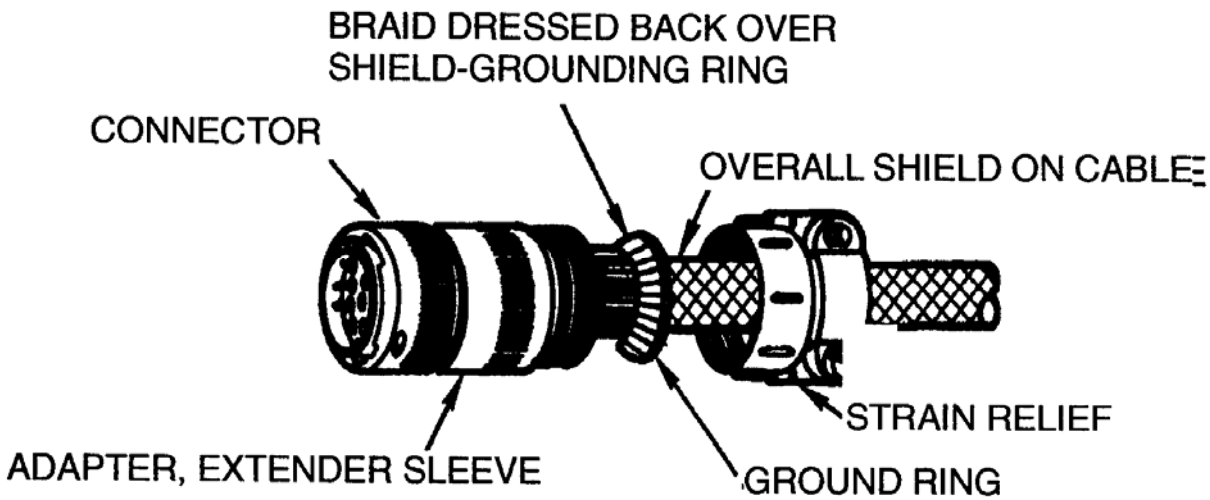

Figure 11-1. Terminating Overall Shield in RFI Adapter (Typical)

11.4 Individual Shield Termination Using Heat Shrinkable Solder Sleeves

An individual shield that is terminated using heat shrinkable solder sleeves to attach grounding wires to the shield braid is shown in Figure 11-2. Heat shrinkable solder sleeves should be installed in accordance with manufacturers' instructions. After shrinking, they shall meet the requirements of 9.10.

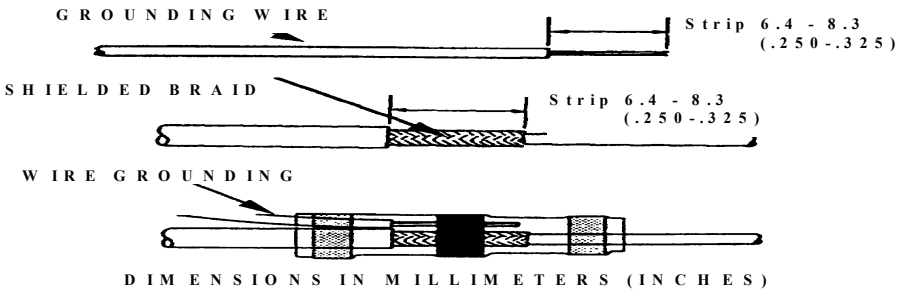

Figure 11-2. Individual Shield Termination Using a Heat Shrinkable Solder Sleeve

11.5 Individual Shield Termination Using Two-Piece Crimp Rings

An individual shield that is terminated using two-piece crimp rings (ferrules) to attach grounding wires to the shield braid is shown in Figure 11-3. The inner crimp ring (ferrule) shall be sized so that any inward distortion caused by crimping will not affect the insulated wires it contains. The end of the grounding wire shall be flush with the outer ferrule, but shall not overhang the inner ferrule. The grounding wire detachment force from the crimped sleeve shall meet the requirements of paragraph 13.7.

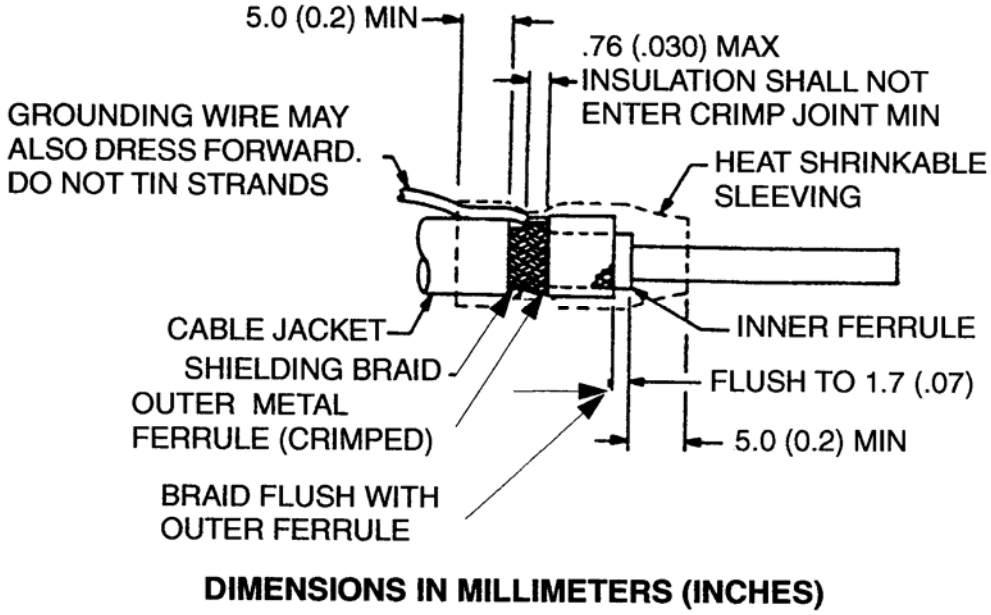

Figure 11-3. Individual Shield Termination Using a Two-Piece Crimp Ring

11.6 Group-Grounding of Individual Shield Terminations

When grounding wires of individual cable shields are grounded to one point, they shall be spliced to a common grounding wire. No more than four conductors plus a drain wire shall be terminated in one splice (see Figure 11-4 and Figure 11-5). For ordinary RFI/EMI protection, the shield shall be terminated within 100mm (4 inches) of the center conductor termination for the x-distance, and the combined length of shield grounding wires shall not exceed 190mm (7.5 inches) for the y-distance. For interference sensitive circuits, preferred lengths are 20 and 115mm (.75 inches and 4.5 inches). See Table 11-1 for the x and y distances. When this does not provide adequate isolation, RFI/EMI connector backshells may be necessary.

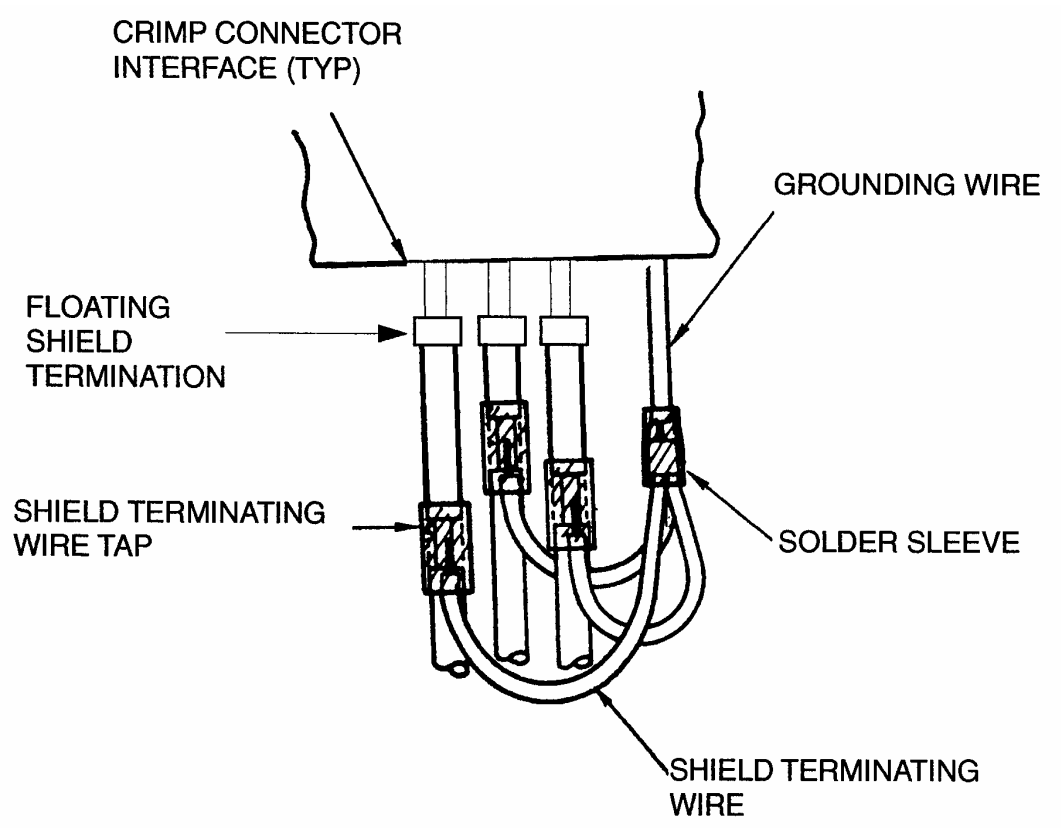

Figure 11-4. Group Grounding of Staggered Shields

Table 11-1. Shield Termination Control for Group Grounding

Name of Circuit	X-Distance Max. mm (Inches)	X-Distance Min. mm (Inches)	Y-Distance Max. mm (Inches)
Interference sensitive	20.0 (0.75)	13 (.50)	115.0 (4.5)
Ordinary interference protection	100.0 (4.0)	13 (.50)	190.0 (7.5)

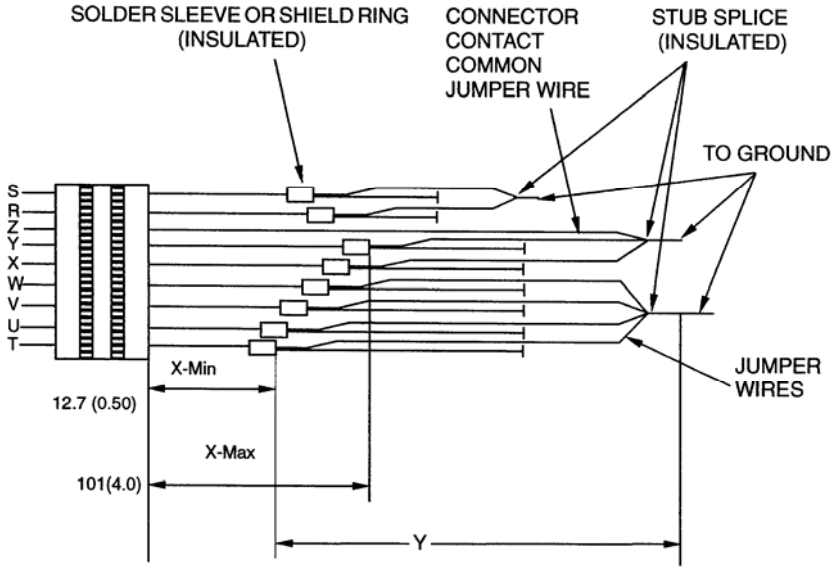

Figure 11-5. Group-Grounding of Individual Shield Terminations

11.7 Large Compression Ring Grounding

Individual shields and overall shields may be grounded using large compression rings. Shields should be dressed across the inner collector ring either forward towards the connector (Figure 11-6B) or backwards away from the connector (Figure 11-6C). Grounding wires shall exit the front or rear of the compression ring as required by design, and shall be formed in accordance with Figure 11-6A. Grounding exiting the side of the compression ring away from the rear of the connector shall be dressed beneath the compression ring when terminating to a connector pin (Figure 11-6D). The outer compression ring shall be crimped securely over the shields and inner collector ring (Figure 11-6E). The grounding wire detachment force from the crimped sleeve shall meet the requirements of paragraph 13.7.

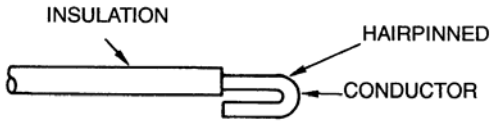

A. PREPARATION OF GROUND WIRE

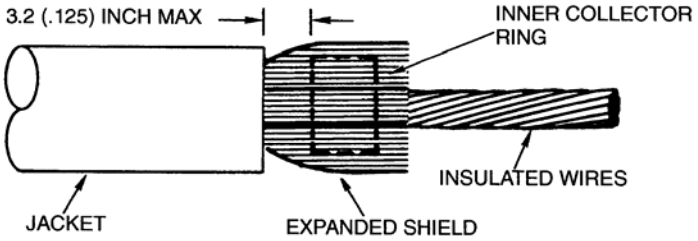

DIMENSIONS IN MILLIMETERS (INCHES)

B. PLACEMENT OF COLLECTOR RING FOR OVERALL SHIELD

Figure 11-6. Large Compression Ring Grounding (Typical Applications)

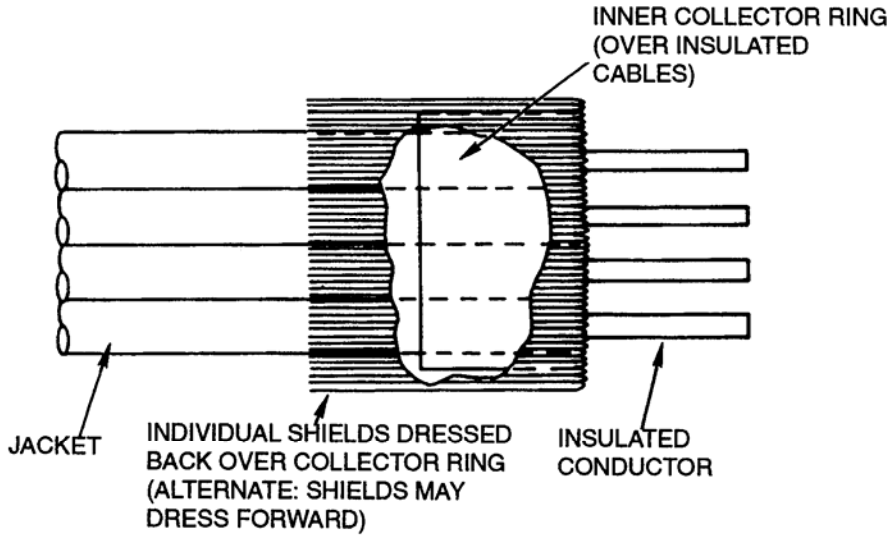

C. DRESSING OF INDIVIDUAL SHIELDS OVER COLLECTOR RING

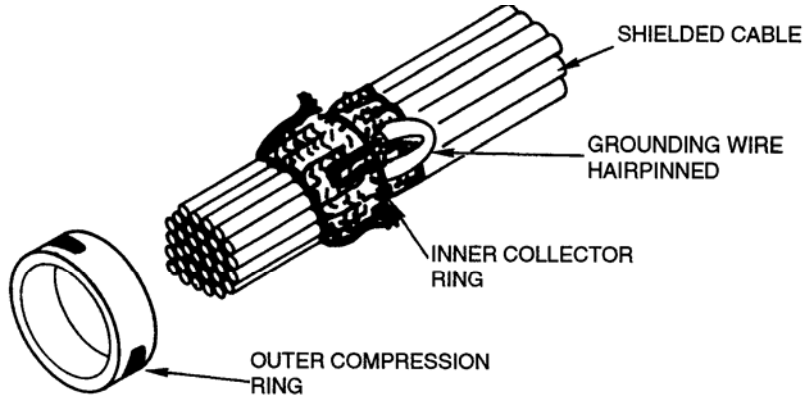

D. PLACEMENT OF HAIRPINNED GROUNDING WIRE PRIOR TO CRIMPING OUTER COMPRESSION RING

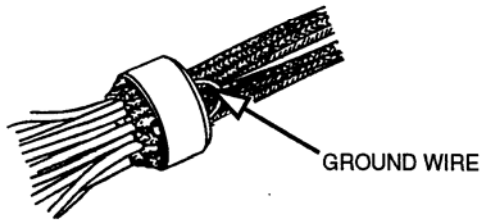

E. ASSEMBLY WITH CRIMPED OUTER COMPRESSION RING

Figure 11-6. (continued)

11.8 Floating Shield Terminations

The outer jacket shall be trimmed to expose the shielding braid. The braid shall be folded back over the outer jacket as illustrated in Figure 11-7. Combing the braid is optional. Heat-shrinkable sleeving shall be installed over the trim point.

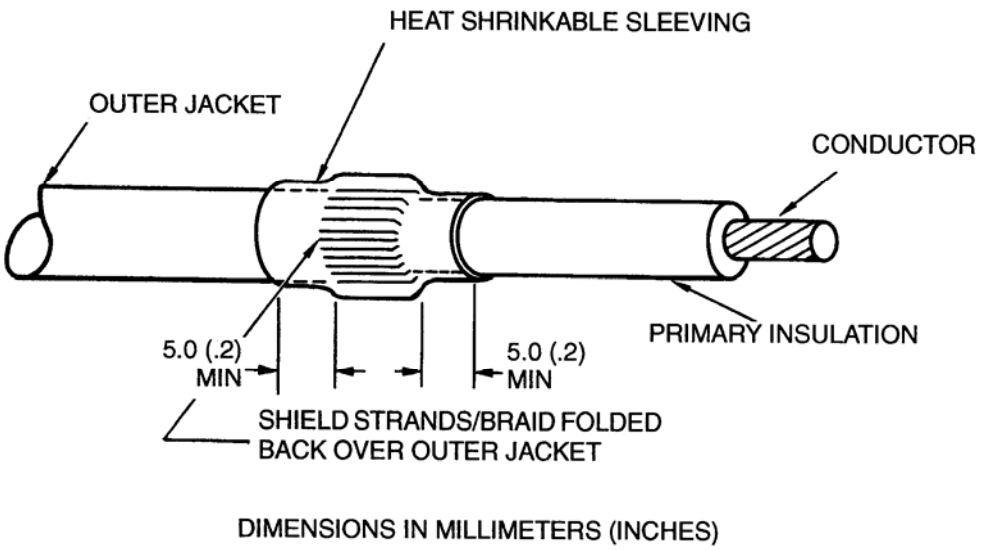

Figure 11-7. Floating Shield Termination

11.9 Unshielded Wire Exposure and Total Length of Grounding Wires

Exposed wire beyond a shield termination is subject to induced RFI/EMI interference. Any excessive length of grounding wire may act as an antenna in picking up interference. Distances to terminations and maximum lengths of grounding wires attached directly to an individual shield are given in Table 11-2 and illustrated in Figure 11-8. Shield terminations shall be staggered behind the connector/accessory 13mm (0.5 inch) minimum and 100mm (4 inches) maximum to assure minimum buildup of the wire bundle diameter in the shield termination area (see Figure 11-5).

Table 11-2. Shield Termination Control (Refer to Figure 8-8)

Nature of Circuit	X-Distance Recommended Max Length mm (Inches)	Y-Distance mm (Inches)
Interference sensitive1/	20 (0.75)	40 (1.5)
Ordinary interference protection	100 (4.0)	150 (6.0)

1/ It may be necessary to use conductive adapter backshells that provide full isolation to secure better RFI/EMI protection for extremely sensitive circuits.

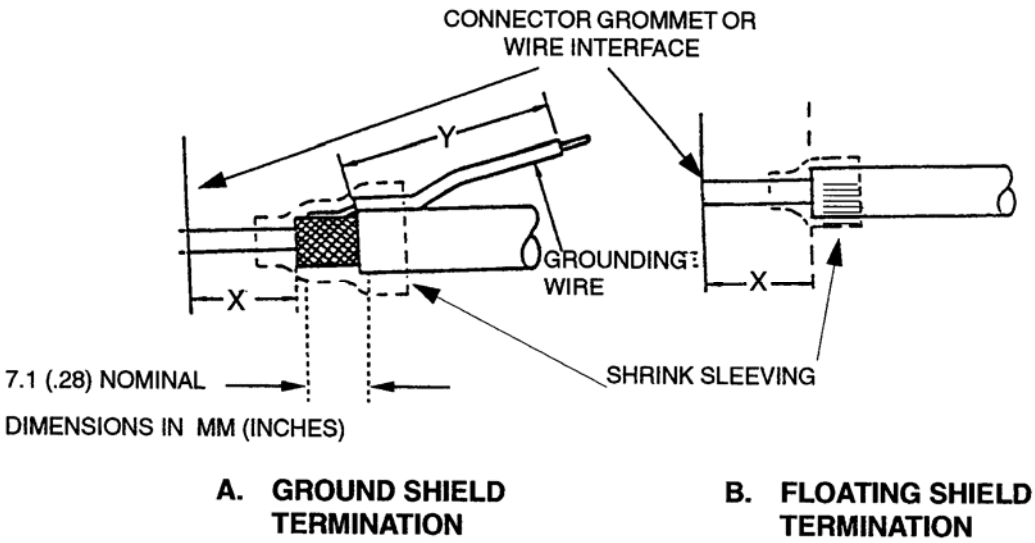

Figure 11-8. Conductor Exposure for Individual Shield Termination Types

CHAPTER 12 - CRIMP CONNECTIONS

12.1 General

1. Crimped connections shall be inspected 100 percent in order to verify compliance with this standard.

2. The tools and equipment used to make crimped connections shall meet the requirements listed in Chapter 6.

3. Insulation gaps shall be as specified in paragraph 10.1-7.

12.2 Examination of Crimp Contact

For manual crimping operations prior to wire insertion, the assembler shall examine the crimp contacts. Contacts that show the following conditions shall not be used.

1. Cracks in the plating or base metal.

2. Tarnishing or discoloration of the plating.

3. Plating removal or flaking.

4. Out-of-roundness of the wire well entrance.

5. Exposed base metal.

12.3 Process Controls

1. Tool and Equipment Control

a. **Full-Cycle Ratcheting**. Crimp tools shall contain a full-cycle ratcheting mechanism which shall prevent the indenters from releasing before the crimp cycle has been completed.

b. **Number of Indenters**. Each crimp tool shall have a minimum of four indenter blades (preferably double-indenter blades).

c. **Calibration Adjustments**. The calibration adjustments shall be accessible only when the tool is disassembled. These adjustments shall be made only by the manufacturer of the tool or by a calibration laboratory.

d. **Sealing of Adjustable Tools**. All adjustable crimp tools shall be set, sealed or locked, and verified prior to use.

2. Examination of Crimp Tools. All tools used in production.

a. Nonadjustable tools. If the tool is broken or damaged, it shall be removed from service.

b. Tools with a sealed setting and sealed locator or position. If the tool is broken or damaged, or if the seal is broken, the tool shall be removed from service.

c. Records of examination shall be maintained for hand tools

3. **Allowable Contact-Conductor Combinations.** The contact-conductor combinations shall be in accordance with manufacturer's recommendations. Contacts or conductors shall not be modified.

4. Integrity of Crimped Connections

a. **Test Interval**. The crimp tools and each contact-conductor combination to be used in a production run shall be tested at the start and at the end of each work shift or production run, whichever is shorter. Test results shall be recorded and maintained for each crimp tool and contact-conductor combination.

b. **Number of Test Samples**. A minimum of three test samples shall be prepared for each crimp tool and crimp-contact-conductor combination, at the intervals specified in 12.3-4.a.

c. **Test Method**. The crimp contacts shall be placed in a tensile-testing device with appropriate fixtures, and sufficient force shall be applied to pull the wire out of the assembly or to break the wire or crimped item. The head travel speed of the tensile device shall be 25.4 $\pm$ 6.3 mm (1.0 $\pm$ .25 in) per minute. The holding surfaces of the tensile device clamp may be serrated to provide sufficient gripping and holding ability.

d. **Required Crimp Strength**. The tensile strength of the crimp test sample connections shall be in accordance with Table 12-1. For those contact-conductor crimp connections not contained in Table 12-1, the tensile strength of the crimp connection shall be no less than 60 percent of the tensile strength of the wire.

e. **Failure Categories**. After pulling, the test specimens shall be examined under a microscope to determine the method of conductor failure. Crimp joint tensile failures will fall into one of the categories shown in Figure 12-1. The crimp tool setting which produces the maximum number of fray breaks and breaks outside the contact shall be used for assembly (see Note in Figure 12-1). If multiple settings provide identical tensile strengths for a crimp joint, the setting selected shall be the one that provides more wire breaks than wire pull-outs.

f. **Examination of Test Samples**. Each individual test sample shall be inspected to the requirements of this document and the observations recorded and maintained.

Table 12-1. Crimp Tensile Strength 1/

Wire Barrel Size	Copper, Conductor Size, AWG 2/	Tensile Strength, Newtons (Pounds), Minimum
22M & 24	28 26 24	22 (5) 36 (8) 36 (8)
22D & 22	28 26 24 22	22 (5) 36 (8) 36 (8) 57 (13)
20	24 22 20	36 (8) 57 (13) 92 (21)
16	20 18 16	92 (21) 142 (32) 183(41)
12	14 12	290 (65) 459 (103)
10	10	707 (159)
8	8	1281 (288)

1/ For contact-conductor combinations not listed in the table, the requirements of 12.4.3.d shall apply.

2/ Refers to copper and high strength copper alloy stranded conductors.

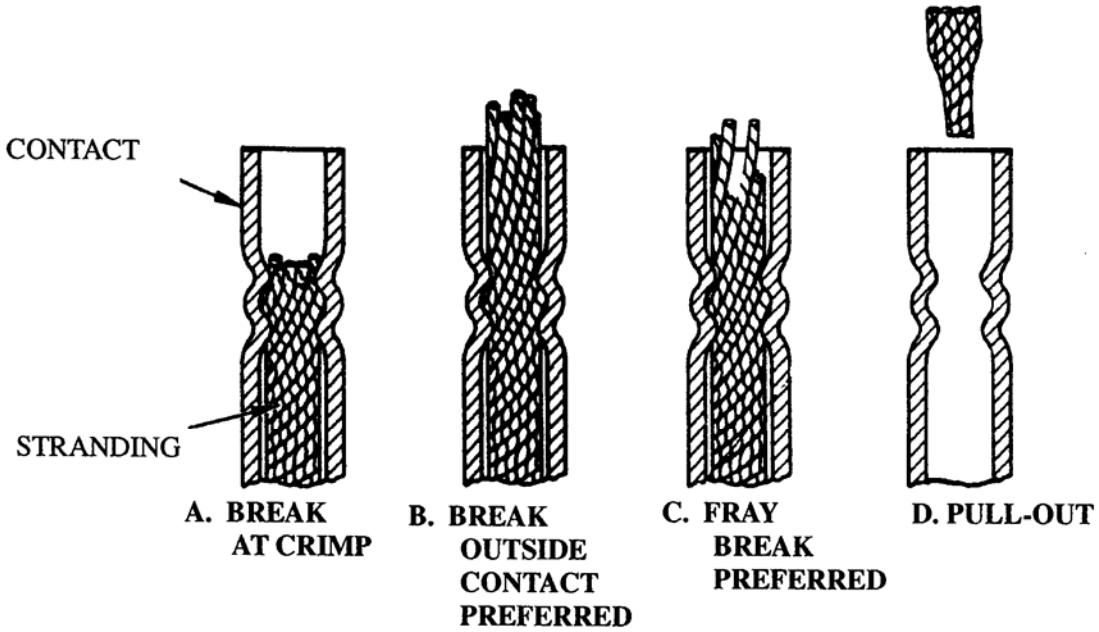

NOTE: ***ALL CATEGORIES ARE ACCEPTABLE IF SEPARATION OCCURS ABOVE MINIMUM TENSILE STRENGTH PER 12.3.4.d.***

NOTE: ***BREAKS AT THE ENTRANCE OF THE CONTACT WIRE BARREL, CAUSED BY CONDUCTOR CUTTING BECAUSE THE CONTACT IS NOT HELD SQUARELY IN THE TESTER JAWS, SHALL NOT BE PREFERRED BREAKS.***

Figure 12-1. Crimp Joint Tensile Failure Categories

CHAPTER 13 - CONNECTOR ASSEMBLY

13.1 General

1. Connectors shall be as specified on the engineering documentation. Supplemental processes applicable to connector assembly are as follows:

a. Conductors shall be assembled into crimp contacts in accordance with Chapter 12 of this Standard.

b. Conductors shall be assembled by soldering in accordance with the latest revision of NASA-STD-8739.3.

c. Connector backshells shall be potted and molded, or use stress relief boots as required, in accordance with applicable engineering documentation.

2. The mating surfaces of all unmated connectors shall be protected by covers during storage, handling, and installation of interconnecting cables and harnesses.

13.2 Assembly of Crimp-Type Connectors (Including Terminal Junctions)

1. Crimp contacts are assembled to conductors outside of the connector and are subsequently installed into the connector body. When a connector is properly assembled, contacts are captured inside the connector. Retaining clips are one means of securing contacts in place inside connector cavities. When retaining clips are present, contacts shall be fully seated and locked into place by the clip. Improperly seated contacts can "push back" causing intermittent and open circuits. In all instances, non-metal contact insertion and removal tools shall be used to prevent damage to connectors, contacts, or conductors.

CAUTION: ***ANY DAMAGED TOOL SHALL BE DISCARDED IMMEDIATELY AND REPLACED WITH A NEW TOOL. SHOULD PART OF THE TIP OF A TOOL BREAK OFF, ALL PIECES OF THE TIP SHALL BE ACCOUNTED FOR. IF ALL PIECES CAN NOT BE ACCOUNTED FOR, DOCUMENT THE INCIDENT AND THE RESPONSIBLE ENGINEERING AND/OR QUALITY REPRESENTATIVE SHALL BE NOTIFIED IMMEDIATELY.***

2. The installation of unwired contacts into an environmental connector is mandatory for high humidity and moisture environments and is optional for other applications. Terminal junctions shall not have unwired contacts installed in unused cavities. Plastic sealing plugs shall be used in all unwired contact cavities of environmental connectors.

13.3 Assembly of Solder-Type Connectors

Measures taken for stress relief of soldered connectors shall be sufficient to assure that all wire bending will take place in a flexible, unwicked part of the conductor. In all instances, stranded conductors will experience solder-wicking during attachment. The conductor will be rigid up to the point where the wicking stops and flexible beyond it. Wire movement concentrates stress at

the point where wicking stops, and normal harness handling can produce conductor fatigue and failure.

CAUTION: ***WHERE SOLDER CONTACTS HAVE FLOAT, FLUX MAY RUN DOWN ONTO THE MATING SURFACE OF THE CONTACT DURING SOLDERING. THIS CONTAMINATION CAN CAUSE INTERMITTENT CIRCUITS AND OPEN CIRCUITS WHEN CONNECTORS ARE MATED. ASSEMBLY SEQUENCES SHALL REQUIRE CLEANING OF CONTACT MATING SURFACES, THE SOLDER JOINTS, AND THE REAR SURFACES OF CONNECTORS AFTER SOLDERING OPERATIONS ON THESE TYPES OF CONNECTORS.***

13.4 Assembly of Hermetic and Environmental Connectors

Requirements for assembly of environmental and hermetic connectors are as follows:

1. **Hermetic Connectors**. Hermetic connectors provide for pressure sealing from one side of the connector to the other. These connectors are usually of the solder cup design. Solder connection requirements and accept/reject criteria shall be in accordance with the latest revision of NASA-STD-8739.3.

2. Environmental Connectors

a. **Sealing plugs.** Sealing plugs used in unwired contact cavities of environmental connectors shall be fully seated. In all instances, non-metal contact insertion and removal tools shall be used to prevent damage to connectors, contacts, or conductors.

b. **Grommet Sealing.** When a wire diameter is smaller than the grommet hole, the wire insulation diameter shall be increased by using heat shrinkable sleeving.

NOTE: ***CARE SHALL BE USED WHEN USING SHRINK SLEEVING. THE OUTER DIAMETER OF THE SLEEVING SHOULD BE SMALL ENOUGH TO ALLOW USE OF EXTRACTION/INSERTION TOOLS.***

13.5 Assembly (Torquing) of Adapters and Cable Clamps to Connectors

Adapters, cable clamps, and connector backshell tongs shall be torqued to connector bodies using calibrated tooling. During assembly (torquing backshells, securing cable clamps/tongs, etc.), strain relief members shall not be stressed or forced to rotate. Torque requirements shall be stated on the engineering documentation. Torque values shall be recorded by the responsible Quality Representative.

CAUTION: ***CARE SHALL BE EXERCISED WHEN POSITIONING AND TORQUING CONNECTOR BACKSHELL TONGS, STRAIN RELIEF CLAMPS AND OTHER STRAIN RELIEF MEMBERS. THE PROPER POSITIONING OF THESE DEVICES WILL PREVENT THE SHARP BENDING OF AND***

SUBSEQUENT DAMAGE TO HARNESSES DURING THEIR INSTALLATION OR OPERATIONAL USE.

13.6 Assembly of RF Connectors and Coaxial Contacts

Many types of RF connectors and coaxial contacts are available. Electrical performance, together with other considerations, affects the selection of the connector and coaxial cable. Depending on the requirements, assembly procedures vary from normal shop practice for cables operating at less than 1 gigahertz (GHz) to precision techniques for those operating up to 18 GHz. Generally, the following practices shall be observed:

1. The assembly shall be made in accordance with the connector manufacturer's instructions; however, many manufacturer's instructions are not adequate and may cause problems. See Appendix B for a discussion of frequently encountered workmanship problems.

2. Connectors shall not be modified.

3. Special tools necessary for the fabrication shall be specified on the assembly procedures.

4. Torque values, when applicable, shall be specified on the engineering documentation.

13.7 Process Controls for Two-Piece Crimp Rings and Stub-Type Splicing Devices

1. **Test Interval**. The crimp tools and crimped ring conductor(s) combination to be used in a production run shall be tested at the start and at the end of each work shift or production run, whichever is shorter. Test results shall be recorded and maintained for each crimp tool and crimped ring conductor(s) combination.

2. **Number of Test Samples**. A minimum of three test samples shall be prepared for each crimp tool and crimped ring conductor(s) combination, at the intervals specified in 13.7.1.

3. **Test Method**. The sample crimp rings and stub-type splicing devices shall be placed in a tensile-testing device with appropriate fixtures, and sufficient force shall be applied to pull each individual wire to the value specified in Table 13-1 without movement or pulling of the wire from the crimped ring or breaking of the wire or the crimped ring. The head travel speed of the tensile device shall be 25.4 $\pm$ 6.3 mm (1.0 $\pm$ .25 in) per minute. The holding surfaces of the tensile device clamp may be serrated to provide sufficient gripping and holding ability.

4. **Required Crimp Strength**. The tensile strength of the crimp test sample connections shall be in accordance with Table 13-1. For those crimped ring conductor(s) combinations not contained in Table 13-1, the tensile strength of the crimp connection shall be no less than 60 percent of the tensile strength of the wire.

5. **Examination of Test Samples**. Each individual test sample shall be inspected to the requirements of this document and the observations recorded and maintained.

Table 13-1. Pull Force 1/

Grounding Lead Wire Size		Applied Force Minimum Newtons (Pounds)	
AWG 24	Copper	36	(8)
AWG 22	Copper	57	(13)

1/ For wire sizes not listed, the minimum applied force shall be 60 percent of the tensile strength of the wire being pulled.

13.8 Inspection and Verification Testing

Inspection and verification of assembled connectors shall include, but not be limited to, the following tests and inspections:

1. **Visual Examination**. One hundred percent visual inspection shall be conducted for acceptable soldering, proper identification, and freedom from damage.

2. **Contact Seating**. Each contact in connectors utilizing retention clips or tines shall be push or pull tested 100 percent for seating. The results shall be recorded and shall be limited to one push test per contact insertion.

a. **Push Testing.** In applications in which the engaging (mating) ends of the pins or socket contacts are accessible, contact retention testing to the requirements of Table 13-2 shall be performed. Push testing shall utilize a tool that minimizes the possibility of accidental contact bending and applies a controlled, preset pressure to the contact before releasing the force. A typical tool design is shown in Figure 13-1. Socket testing probes shall be undersized compared to mating-pin diameters and shall not cause a mating cycle to take place.

Table 13-2. Contact Retention Test Forces

Contact sizes	Push Test Force (Newtons (Pounds)	Pull Test Force Newtons (Pounds) 1/, 2/
22, 22D and 22M	17.8 to 26.7 (4 to 6)	13.3 to 22.2 (3 to 5)
20	22.2 to 31.1 (5 to 7)	13.3 to 22.2 (3 to 5)
16	35.6 to 44.5 (8 to 10)	17.8 to 31.1 (4 to 7)
12	44.5 to 53.4 (10 to 12)	17.8 to 31.1 (4 to 7)

1/ Wire shall not be pulled to a force in excess of 80 percent of the specified minimum crimp tensile requirement. This requirement shall be met to avoid damage to the wire/contact crimp joint.

2/ These forces are based on wire size AWG 24. If smaller wire is used these values should be adjusted accordingly.

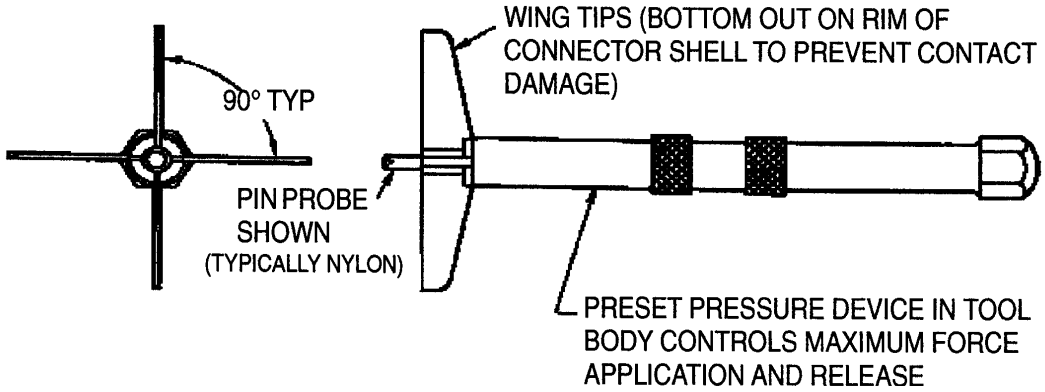

Figure 13-1. Typical Push Test Tool

b. **Pull Testing**. On terminal junctions and certain insertable crimp-contact connectors, contacts are not exposed for push testing. Pull force contact retention testing to the requirements of Table 13-1 shall be performed only on devices in which the contact engaging (mating) ends are not accessible. Pull force testing shall be performed by pulling on the wire terminated in the contact as illustrated in Figure 13-2. The wires to be pulled (except for shielded wire) shall be free of ties, cable clamps, or any wire-harness shielding devices within 127 mm (5 inches) of the terminal junction sealing grommet surface (see Figure 13-2). When the wire breakout to the terminal junction is less than 127 mm (5 inches) in length, then ties and clamps may be removed only to the point where the wires leave the main bundle. Pull the insulated wire perpendicular to the wire exit face of the connector device. Wire shall not be pulled to a force in excess of 80 percent of the specified minimum crimp tensile requirement. This requirement shall be met to avoid damage to the wire/contact crimp joint.

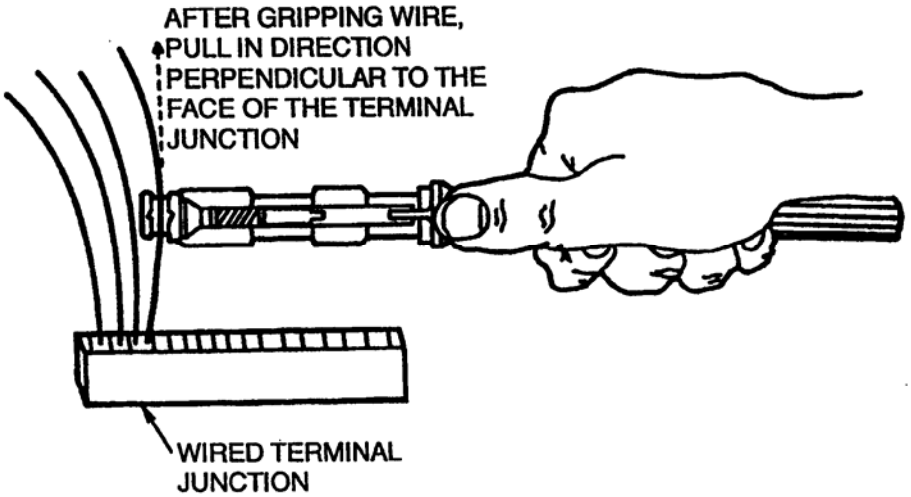

Figure 13-2. Application of Retention Tool for Gripping Wire (Typical)

<u>NOTE:</u> ***WHEN THE WIRE IS PULLED AT ANY ANGLE EXCEEDING 5° FROM THE PERPENDICULAR, THE CONTACT MAY BIND INSIDE THE CONNECTOR AND GIVE A FALSE READING.***

c. When a shielded wire is being pulled, the wire shall be gripped between the sealing grommet of the terminal junction module and the shield termination.

3. **Solder Contacts**. All solder contacts that have float shall be free of flux and other contamination and should be checked to assure they have normal float characteristics after soldering and cleaning.

4. **Coaxial Cable Requirements**. Coaxial cables shall pass electrical requirements (e.g., voltage standing wave ratio (VSWR), insertion loss, and other performance tests specified on the engineering documentation). Prior to assembly or installation, the following inspections shall be conducted, as appropriate.

a. Verify proper strip length and assembly of center conductor into contact.

b. Verify proper securing of the outer conductor.

c. Verify that the center contact location meets requirements for proper mating.

d. Visually verify undamaged condition of mating surfaces and coupling means.

5. Torque Verification. Verify that torque of connector backshells, strain relief clamps, etc., is as specified in the engineering documentation.

CHAPTER 14 - HARNESS IDENTIFICATION

14.1 General

The interconnecting cabling and wiring shall be identified and marked per the engineering documentation and the latest revision of NPR 8715.3, NASA Safety Manual.

14.2 Permanent Identification

The interconnecting cabling and wiring shall be provided with permanent identification. The following minimum requirements shall be used:

1. **Cable and Harness**. Each cable and each harness shall be permanently identified. The identification marking shall be capable of passing all environmental testing that may be required for the projected use and remain legible.

2. **Connectors**. Each connector shall be identified. The identification may be placed directly on the connector or on the cable near the connector. In all cases, identification shall resist abrasion, either as applied or with the aid of an overcoat.

3. **Temporary Identification**. All temporary identification shall be removed from each completed harness by the end of the fabrication process.

4. **Locating Tape**. Marking tape used to position and locate harnesses and cables may be either permanent or temporary in nature. Permanent type marking tapes shall meet environmental requirements.

14.3 Verification of Identification

Identification shall be verified visually by the responsible Quality Representative or designee for correctness, legibility, size, and proper location.

THIS PAGE INTENTIONALLY LEFT BLANK

CHAPTER 15 - INTERCONNECTING HARNESS AND CABLE CLEANING

15.1 General

Interconnecting flight cable and harness assemblies shall be clean and free of contamination prior to installation on the spacecraft. Cleanliness shall be an ongoing effort. Practices for flight assemblies shall include assembly in a clean environment and the use of protective plastic sheeting or other coverings over harnesses not undergoing active assembly.

15.2 Cleaning the Harness Assembly

Particles and debris shall be cleaned from the harness or cable assembly by vacuum-removal methods. Brushing with solvent shall be used as required to remove other contamination. Only solvents as per paragraph 6.9 shall be used.

15.3 Cleaning Harness Connectors

The following cleaning procedures shall be used with connectors:

1. For solder-type connectors, flux rundown into the mating part of socket contacts shall be removed. Solvent cleaning by brushing may be used. Contact surfaces of pins, sockets, and connector bodies shall be free of flux residue (see Figure 15-1), solder splash, metal flakes, moisture, and other contaminants that may jeopardize the integrity of the connector system.

2. Crimp-type multipin and coaxial electrical connectors shall be solvent-cleaned by brushing before assembly to the harness or unit cable. Contact surfaces of pins and sockets and the interior surfaces of the connector shall be free of contaminants.

3. The internal surfaces of dust covers and connector covers shall be cleaned by solvent brushing before the covers are fitted onto cleaned connectors.

4. If necessary, connectors that were subjected to frequent mating and demating operations during fabrication and test shall receive additional cleaning prior to the final mating. Visual examination of the contact surfaces of connectors shall not reveal the presence of contaminants such as metal flakes or large dust particles. If required, additional cleaning shall be performed by vacuum removal methods and solvent-brushing.

15.4 Cleaning Coaxial Connectors (Assembled)

Coaxial connectors shall not have accumulated contaminants such as metal flakes, dirt, moisture, and other foreign materials. The connector interface shall be cleaned by brushing with solvent, vacuum procedures, or a combination thereof until the contaminants have been removed.

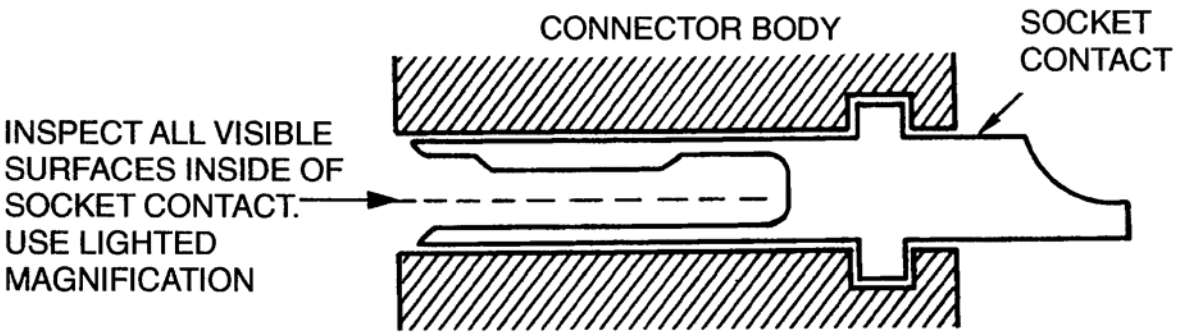

Figure 15-1. Visual Examination Inside the Socket Contact for Flux Residue

CHAPTER 16 - INTERCONNECTING HARNESS AND CABLE HANDLING AND PROTECTION

16.1 General

Interconnecting harnesses and cables often receive their maximum stresses when they are moved, handled, or installed in their permanent locations. Harnesses shall be handled with considerable care and attention.

16.2 In-Process Protection

Harnesses and cables shall be protected during fabrication as follows:

1. Keep a large harness mounted on its own wiring board until final inspection.
2. Protect all connectors, cables, and harnesses not on a wiring board or fixture by wrapping individually in bubble wrap or an approved clean cushioning material and placing them in a sealed plastic bag or equivalent.
3. Harnesses that are not being worked on shall have appropriate protection.
4. Protect all unmated connectors with clean dust covers (connector caps).

16.3 Completed Interconnecting Harness and Cable Storage Protection

Completed harnesses and cables shall be protected as follows:

1. Wiring harnesses may either be stored on the wiring board or otherwise protected.
2. Overstressing and excessive flexing of wires shall be avoided during connector cleaning and mating/demating operations. This is especially important for solder-type connectors.
3. All unmated connectors (including test equipment) shall be protected with clean dust covers (connector caps) when not in use. After the cleanliness of the connector has been verified visually, it shall be protected with a clean dust cover until it is ready for final mating.
4. Protect all connectors, cable, and harnesses by wrapping them individually in bubble wrap or an approved clean cushioning material and placing them in a sealed plastic bag or equivalent.

THIS PAGE INTENTIONALLY LEFT BLANK

CHAPTER 17 - CONNECTOR MATING

17.1 General

Although most electrical connectors are considered to be durable, each of them has a finite life. During testing and system checkout, certain connectors may be subject to frequent mating and demating. When this situation exists, wear and potential damage can be reduced by the use of ”connector-savers". Connector-savers transfer the wear from the flight connector to nonflight jumper harness connectors. It also prevents uncontrolled (and possibly damaged) test equipment connectors from mating directly with the cable or harness assembly connectors. Any connector, including connector savers, mating with flight hardware shall be in accordance with engineering documentation.

17.2 Connector Mating and Demating

The following practices and precautions shall be exercised in mating and demating connectors:

1. Prior to connector mate/demate operations, verify that the circuit has been de-energized.

2. Examine connectors for contamination, pin, and shell damage prior to mating.

3. All flight qualified, ac/dc power interface and test equipment connectors that mate with flight and support equipment connectors shall be protected against damage and contamination during mating and demating operations, and when they are in a demated condition.

4. Caution shall be applied to mating and demating operations to preclude damage to connectors. In some cases a demating tool may be utilized.

5. Harness connectors mated to test tees or breakout boxes shall be provided with stress relief to restrict flexing of connectors and cables.

6. Mate/demate operations between the flight hardware, support equipment connectors, system test equipment, and also in final assembly shall be performed by authorized personnel only.

7. The use of connector savers is recommended. A connector saver can be a short harness jumper that has a mating interface connector to engage the unit. The other end of the harness has the same interface as the unit. Connector savers shall be clearly marked. Connector savers shall meet the same requirements as a flight connector.

8. Interfacial seals, which are not bonded to the connector shall be examined and, if necessary, replaced with new, clean seals prior to final mating.

9. When required, a log of mate and demate operations and a bent pin log shall be kept for flight connectors.

10. Flight connectors shall be torqued as specified on engineering documentation.

11. Electrostatic discharge (ESD) protective caps shall be installed on exposed connectors of harnesses that are attached to ESDS hardware.

17.3 Coaxial Connector Mating

The final mating of coaxial connectors shall be done using the torque values given in Table 17-1. When mating coaxial connectors, the cable assemblies shall be held such that only the connector coupling is rotated.

CAUTION: ***THERE SHOULD BE NO RELATIVE MOTION OF THE CABLES OR THE CONNECTOR BODIES WHILE THE CONNECTOR IS BEING TORQUED.***

Table 17-1. Mating Torque Values for Coaxial Connectors

Connector Type	Coupling Nut Torque Newton-Meters (Inch-lbs)	Coupling Nut Torque Newton-Meters (Inch-Ounces)
SMA	0.8 to 1.1 (7 to 10)	
PRECISION TNC	0.9 to 1.4 (8 to 12)1/	
TNC	0.5 to 0.7 (4 to 6)	
N	0.7 to 1.1 (6 to 10)	
SMC		0.3 to 0.4 (35 to 50)
PRECISION N	0.9 to 1.4 (8 to 12)1/	

1/ Typical values. Use manufacturer's recommendations if different.

CHAPTER 18 - TESTING AND INSPECTION

18.1 General

Completed interconnecting harnesses and cables shall be verified as meeting all applicable functional, electrical, and design requirements. Visual examination and electrical testing shall be performed as required.

18.2 Testing

1. Acceptance testing shall be conducted on all interconnecting cable and harness assemblies immediately following fabrication.

2. All acceptance testing shall be conducted in accordance with test procedures approved by the procuring Agency prior to use.

3. Records of all acceptance testing shall be complete and shall be traceable to the cable or harness assembly being tested.

4. Adapter cables, breakout boxes, and/or connector savers shall be used to conduct any and all electrical tests on interconnecting cable and harness assemblies. Hand probes shall not be used directly in the cable or harness connectors.

5. At a minimum, the electrical acceptance tests on potted-type connectors shall be performed immediately before the potting operation and after final assembly.

6. Acceptance testing, at a minimum, shall include the following tests which shall be performed in the order listed:

a. **Continuity.** Interconnecting cable and harness assemblies shall be tested for point-to-point electrical continuity.

b. **Dielectric Withstanding Voltage (DWV).** The interconnecting cable or harness assembly shall withstand the application of 1050 $\pm$ 50 volts Root Mean Square (RMS), 60 Hz or 1500 $\pm$ 75 Vdc, but shall not exceed the maximum rating of the connector. Leakage current shall not exceed 1 milliampere when applied voltage is maintained for not more than 1 minute. The test potential shall be applied for at least 5 seconds at a rate of no less than 500V per second until the desired test potential is reached. The test potential shall be applied between the following: (1) each conductor and all other conductors in the cable or harness assembly; (2) each conductor and connector shell; (3) each conductor and shield; (4) between shields; and (5) between shield and connector shell/ground, except when shields are connected to ground. For the dc test, the time of application of the test potential may be reduced to the time required for steady state current to be established. There shall be no evidence of electrical breakdown or arc-over. Following the testing, the connectors shall be visually inspected for degradation due to the test.

NOTE: ***CABLE OR HARNESS ASSEMBLIES WITH A LARGE CAPACITANCE, (E.G., LONG RUNS GENERALLY OVER SIX FEET , A LONG CABLE, OR A HARNESS INCORPORATING SHIELDING) SHOULD BE TESTED USING THE DC POTENTIAL OPTION TO AVOID ERRONEOUS INDICATIONS OF FAILURE.***

c. **Insulation Resistance (IR).** The insulation resistance between each conductor and all other conductors, between each conductor and shield, and between each conductor and connector shell, between shields, and between shields and connector shell/ground except when shields are connected to ground shall be greater than 100 megohms at an applied voltage of 500 + 50Vdc until a stabilized reading is attained not to exceed 1 minute, or as specified in the test procedure.

7. Coaxial cable assemblies shall be given appropriate dielectric withstanding voltage (DWV), insertion loss, Voltage Standing Wave Ratio (VSWR), and time domain reflectrometry (TDR) testing in accordance with and as specified in the engineering documentation.

8. Post installation testing shall be performed to assure that individual wire conditions have not been degraded by installation operations. The post installation test requirements shall be those continuity, DWV, and IR tests required by paragraph 18.1 or as directed and specified on the approved engineering documentation. The tests shall be performed after installing the cables or harness in place, but before mating connectors.

WARNING: ***OPERATORS SHALL USE APPROPRIATE SAFETY PRECAUTIONS WHEN WORKING WITH HIGH VOLTAGES.***

CHAPTER 19 - QUALITY ASSURANCE PROVISIONS

19.1 General

1. **Workmanship**. Workmanship shall be of a level of quality adequate to assure that the processed products meet the performance requirements of the engineering documentation and criteria delineated herein.

2. **Inspection**. Inspection for acceptability shall be performed. Conductors shall not be physically disturbed to aid inspection. Inspections shall be made at appropriate points during assembly, at the completion of assembly, and after installation to establish that the appropriate requirements have been met. Inspection may include visual inspection, mechanical measurements, electrical testing, and other methods as deemed necessary. Inspection and testing points shall be specified on the applicable planning documents.

3. **Method of Inspection**. Visual inspection of all connections shall be performed in-process and after final assembly, as appropriate.

4. **Quality Assurance**. Quality Assurance has the responsibility to verify compliance with all requirements of this document. Specific functions are as follows:

a. Verify that all tests, inspections, and measurements, including contact retention tests, specified by this document have been performed.

b. Verify that all personnel who assemble or inspect hardware in accordance with this document have been trained and certified as specified in Chapter 5 of this Standard.

c. In-process surveillance of all assembly operations to verify that all processes and procedures implementing the requirements of this document are current, approved, adequate, and being properly implemented.

d. Verify that contacts, connectors, and conductors have been inspected prior to being assembled.

e. Verify and monitor that the facility cleanliness, environmental conditions, and lighting requirements of Chapter 6 of this Standard are being met.

f. Verify and monitor that fabrication of assemblies is accomplished in a contamination controlled area conforming to the requirements approved by the procuring activity.

g. Verify and monitor that procedures defining cleaning, drying, handling, and packaging are approved and their requirements are followed.

h. Verify that all torque requirements are met.

i. Inspect that crimp terminations are in accordance with Chapter 12 of this Standard.

j. Inspect that connector solder cup terminations are in accordance with NASA-STD-8739.3.

k. Inspect that solder sleeve terminations were fabricated and installed as directed by engineering documentation.

l. Verify installation processes and acceptance/rejection criteria for solder sleeve termination devices were defined and approved.

m. Verify that other processes such as potting and molding, necessary to fabricate a cable or harness, are defined by the engineering documentation and approved. This shall include accept/reject criteria.

19.2 Magnification Aids

Inspection optics shall conform to the requirements of paragraph 6.7. Visual inspection shall be aided by magnification between 4X and 10X. Additional magnification shall be used, as necessary, to resolve suspected anomalies or defects.

19.3 Documentation Verification

Quality Representatives shall verify that all required documentation is current and approved. The documentation shall include:

1. Records:

   a. Results of the visual examination as per paragraph 5.2-1.

   b. Evidence of operator and inspector certification as per paragraph 5.5.

   c. Production and inspection tool calibration as per paragraph 6.3.

   d. Tensile testing as per paragraphs 12.3.4 and 13.7.5

   e. Torque requirements as per paragraph 13.5.

   f. Contact retention test records as per paragraph 13.8.2

   g. Connector mate/demate log and bent pin log as per paragraph 17.2-9.

   h. Results of all acceptance testing as per paragraph 18.2-3.

2. Procedures:

   a. Cabling and harnessing program as per paragraphs 4.4 and 5.1.

   b. Training and certification program as per paragraph 5.4-3.b.

   c. Tooling and equipment operation as per paragraph 6.3-1.e.

   d. Calibration system as per paragraph 6.3-2.c.

   e. Electrostatic Discharge Control Program as per paragraph 6.4.

   f. In-process storage and handling as per paragraph 6.5.

   g. Compounds and special design requirements used for staking of lacing knots as per paragraph 9.2.

   h. Acceptance testing for cable and harness assemblies as per paragraph 18.2-2.

19.4 Documentation Authorization.

Quality Representative shall verify that the following documentation has been approved by the procuring NASA Center prior to implementation:

1. Special engineering requirements as per paragraph 1.1-2.
2. Nonstandard processes, materials, or parts as per paragraph 4.1-3.
3. Departures from this Standard as per paragraph 4.2.
4. Repair as per paragraph 4.5-2.
5. Engineering documentation for special tools as per paragraph 6.3-3.
6. Special solvents as per paragraph 6.9.
7. Acceptance test procedures as per paragraph 18.2-2.

19.5 Verification of Tools, Equipment, and Materials

1. **Tools and Equipment.** Tools and equipment shall be verified for conformance to the applicable requirements found in paragraphs 6.3, 6.6, and 12.3. Verify that special tooling is identified on assembly procedures as per paragraph 13.6-3.

2. **Material**. All materials shall conform to the requirements of paragraphs 6.8 and 6.9. Material controls shall be implemented to ensure that only conforming materials are used. Materials not conforming or not required for the operations involved shall be removed from the work area or tagged nonusable.

19.6 Inspection Criteria

1. **Acceptance Criteria**. Acceptance criteria are described in Chapters 1 through 18, Appendix A and the following:

a. Stripped Conductor:

(1) The insulation shall be uniform and shall exhibit no damage except slight discoloration when thermal strippers have been used.

(2) The conductor shall be clean and free from damage. Strands shall be twisted together in the original lay, or as nearly as possible to the original lay.

(3) Shield strands shall be clean. The number of nicked shield strands shall not exceed 10 percent of the total number of strands.

(4) Flat conductors shall be clean and free of damage.

b. Shield Terminations:

(1) Shield terminations shall be free of projecting strands.

(2) The wire insulation and shrink sleeving shall be free of punctures, cuts, and nicks.

(3) Metal crimp rings/ferrules are tightly and symmetrically crimped.

(4) The solder inside the solder sleeve shall show evidence of proper flow and fillet to the ground wire and shield braid.

(5) The solder sleeve may exhibit discoloration.

(6) The insulation sleeving shall be uniformly shrunk and provide proper covering of the termination.

(7) Solder sleeves are as specified in the engineering documentation.

(8) The solder fillets along the interfaces shall have a smooth, concave appearance.

c. Crimped Connections:

(1) Contact deformed only by tool indentations.

(2) Crimp indents properly located in the correct area of the contact.

(3) Wire strands visible in inspection hole of barrel.

(4) Metal ferrules tightly and symmetrically crimped.

(5) The clearance between the wire insulation termination and the crimp contact barrel is between .25mm (.01 in) to .75mm (.03 in) for wire sizes AWG 20 and smaller, and .25mm (.01 in) to 1.25mm (.05 in) for wire sizes AWG 18 and larger.

d. Cable and Harness Ties:

(1) Properly tied clove hitch and square or other non-slip knot.

(2) Correct and uniform spacing of ties for bundle size.

(3) Correct material as specified on the engineering documentation.

(4) Lacing terminated with a closing stitch and ends trimmed.

(5) No damage to or contaminants on the tie or adjacent wiring.

(6) Strap or tie properly secures wire bundle.

e. Cable and Harness Assemblies:

(1) Connectors are not damaged.

(2) Pin/sockets meet retention force requirements and are not damaged.

(3) Even distribution of tension throughout cable and harness.

(4) Length of wire twist is between 8 and 16 times the outer diameter of the harness.

(5) Cable and harness ties are properly spaced.

(6) Clamps are properly placed.

(7) Cable and harness are not distorted by ties or clamps.

(8) Minimum crossover.

(9) Proper bend radius of breakouts.

(10) Proper identification.

(11) All exposed metal is covered as defined on the applicable drawing.

(12) Heat shrinkable sleeving or nonconductive tape extends at least 5.1 mm (0.2 inch) beyond exposed metal.

(13) Sleeving is uniformly shrunk.

(14) Sleeving is free of cracks, punctures, and charred or burned areas.

(15) Location of shield terminations on wire as per engineering documentation.

(16) Braid is terminated properly.

(17) Cable or harness dimensions and configurations are in accordance with engineering documentation.

(18) Cable or harness is clean.

(19) Unused wires properly terminated.

(20) Routing does not expose cables and harnesses to abrasion, cold flow, or cut-through.

(21) Spiral sleeving with plastic straps are installed correctly.

(22) Protective separator applied over wire bundle beneath metal braid shielding, if required.

(23) Connector back shells and strain relief clamps are tightened as specified by engineering documentation.

(24) High strength copper alloy is used for AWG 24 and smaller conductors.

(25) Proper handling and protection.

f. Coaxial Cables:

(1) Proper strip length and assembly of center conductor into contact.

(2) Proper securing of outer conductor.

(3) Center contact location meets requirements for proper mating.

(4) Mating surfaces and coupling means are undamaged.

(5) Connector back shells and strain relief clamps are tightened as specified by the engineering documentation.

g. Solder Sleeves:

(1) The solder shall be visible through the insulation sleeving.

(2) The solder fillets along the interfaces shall have a smooth, concave appearance.

(3) Solder sleeves shall not be damaged. Slight discoloration resulting from the heating process is permissible.

(4) Solder sleeves shall cover all exposed metal in the spliced area.

(5) There shall be no protruding wire strands from under or through solder sleeves.

2. **Rejection Criteria**. The following are unsatisfactory conditions and shall be cause for rejection:

a. Stripped Conductor:

(1) Damaged, crushed, cut, or charred insulation.

(2) Nicked, gouged, damaged, or severed conductors.

(3) Frayed conductor strands.

(4) Severed shield braid strands.

b. Shield Terminations:

(1) Loose or projecting strands.

(2) Nicked shield strands exceeding 10% of the total number of strands.

(3) Wire insulation with cuts, punctures, or crushing.

(4) Metal ferrules crimped with improper alignment.

(5) Cracked, charred, or split insulation sleeving.

(6) Cracked or fractured solder.

(7) Insufficient solder or poor wetting.

(8) Improper sleeving coverage.

c. Crimped Connections

(1) Metal ferrules crimped with improper alignment.

(2) Cracks in crimp barrel.

(3) Birdcaging of conductor.

(4) Wire strands not visible in inspection hole.

(5) Peeling or flaking of plating on contact.

(6) Damaged or deformed crimp contact.

(7) Crimp indents not located in the correct area on the contact.

(8) Tarnished, corroded, or contaminated crimp contact.

(9) Improper insulation clearance.

(10) Insulation whiskers that extend into the crimp barrel.

d. Cable and Harness Ties:

(1) Improperly laced ties.

(2) Incorrect material.

(3) Wire bundle damaged or deformed by tie.

(4) Loose ties.

(5) Ends not trimmed.

(6) Damaged or contaminated ties or wiring.

(7) Incorrect spacing of ties for bundle size.

(8) Improper handling or protection.

e. Cable and Harness Assemblies:

(1) Projecting strands on shield terminations.

(2) Wire insulation with cuts, punctures, or crushing.

(3) Metal ferrules crimped with improper alignment.

(4) Cracked, charred, or split insulation sleeving.

(5) Improper sleeving coverage.

(6) Birdcaging of conductor.

(7) Peeling or flaking of plating on connectors or pins/sockets.

(8) Damaged or deformed contacts.

(9) Damaged insulation in excess of slight discoloration.

(10) Tarnished, corroded, or contaminated contact.

f. Coaxial Cables:

(1) Improper strip length and incorrect assembly of center conductor into contact.

(2) Improper securing of outer conductor.

(3) Center contact location does not meet requirements for proper mating.

(4) Damaged mating surfaces and coupling means.

(5) Connector back shells and strain relief clamps are not tightened as specified by the engineering documentation.

g. Solder Sleeves:

(1) The solder connection is not visible through the insulation sleeving.

(2) Solder fillet(s) having an uneven and broken flow and/or a convex appearance.

(3) Solder fillet not visible at the interfaces of the stranded wire to shield braid, or stranded wire to stranded wire.

(4) Solder fillet is along only one side of the stranded wire to shield braid, or stranded wire to stranded wire interface.

(5) Solder sleeves do not cover all the metal exposed by the splice installation.

(6) Solder sleeves are split, burned, or damaged.

(7) Wire strands protrude from under or through solder sleeves.

THIS PAGE INTENTIONALLY LEFT BLANK

APPENDIX A - WIRE VISUAL AIDS AND ILLUSTRATIONS

WIRING: CONNECTORS, CABLING, AND HARNESSING -
WIRE DRESS TO CONNECTORS

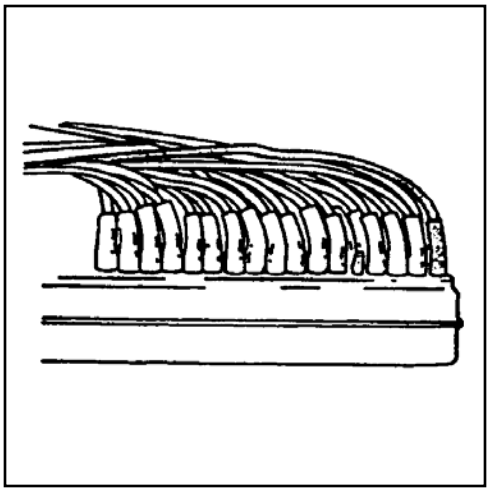

FIGURE A-1

PREFERRED

All wires dressed with even bends to terminate in solder cups.

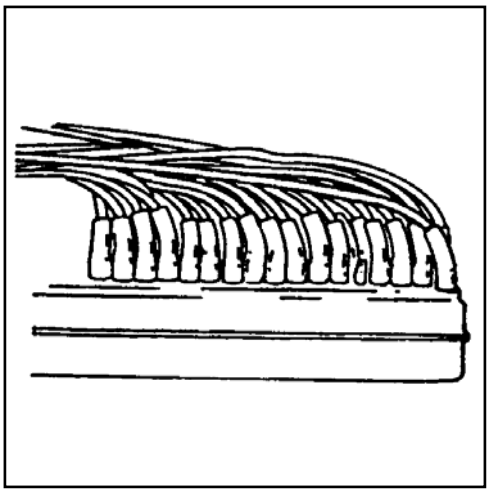

FIGURE A-2

NONCONFORMING

End wire on the right is taut with no stress relief.

WIRING: CONNECTORS, CABLING, AND HARNESSING -
STRESS RELIEF SHRINKABLE SLEEVING ON SOLDER CUPS

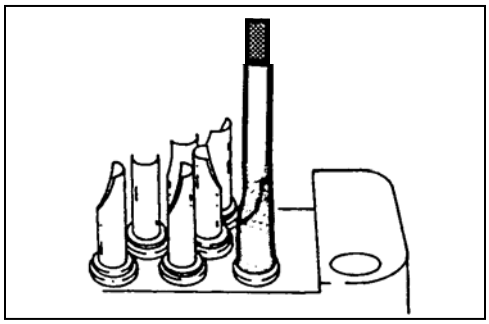

FIGURE A-3

PREFERRED

1. Sleeving on wire covers solder cup and provides support over wire insulation (see controlling specification)
2. Sleeving is fully shrunk over the insulation, wire, and solder cup.
3. Sleeving is sufficiently rigid to provide stress relief and prevent wire bending at the solder joint.

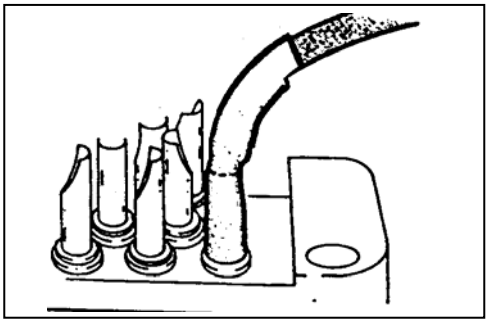

FIGURE A-4

NONCONFORMING

The sleeving is not fully shrunk and permits wire bending and flexing at the joint.

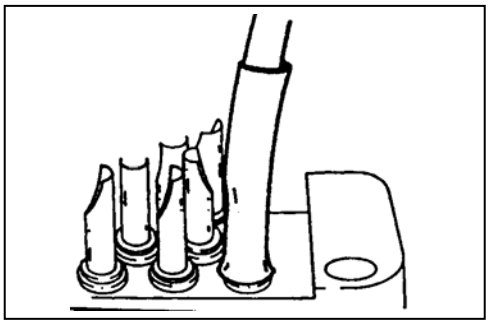

FIGURE A-5

NONCONFORMING

The sleeving is not fully shrunk.

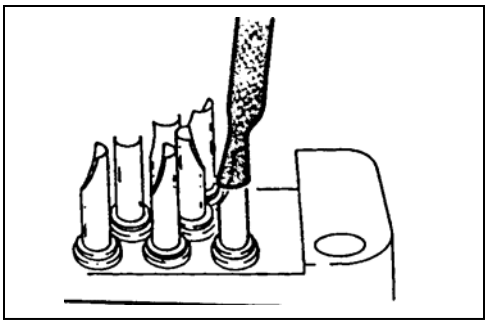

FIGURE A-6

NONCONFORMING

Sleeving does not grip at least half of the cup barrel below the opening.

WIRING: CONNECTORS, CABLING, AND HARNESSING, WIRE PREPARATION, THERMAL STRIPPING

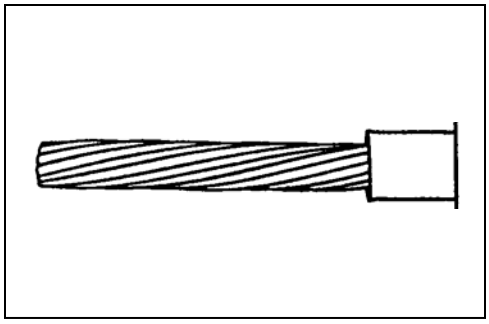

FIGURE A-7

PREFERRED

1. Insulation has been removed from the conductor with no visible damage to the wire strands.
2. Normal lay of wire, if disturbed, shall be retwisted to the original wire lay.

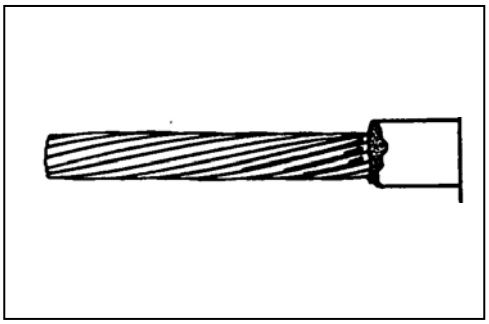

FIGURE A-8

ACCEPTABLE

Minor burnishing and indentation; base metal not exposed.

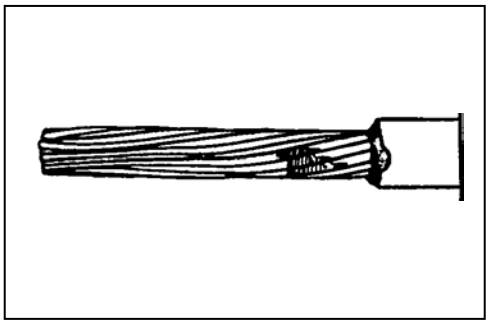

FIGURE A-9

NONCONFORMING

1. Wire strands are gouged and scraped exposing base metal.
2. Original lay of stranding has been straightened and distorted.

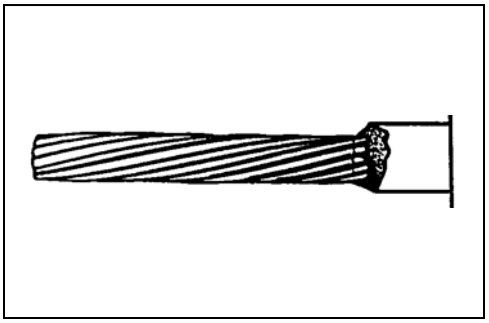

FIGURE A-10

NONCONFORMING

Wire strands show evidence of a nicked condition caused by stripper blades.

WIRE PREPARATION: MECHANICAL STRIPPING

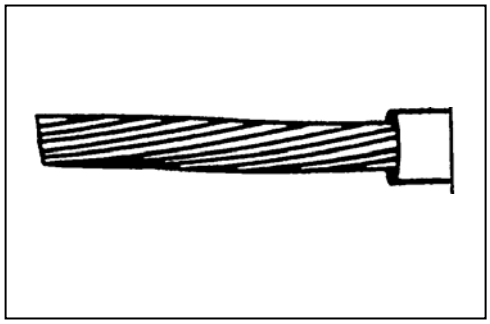

FIGURE A-11

ACCEPTABLE

Wire lay undisturbed; no visible damage to wire strands.

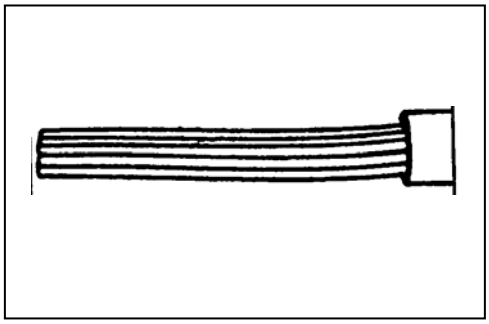

FIGURE A-12

UNACCEPTABLE

Wire strands combed straight. If retwisted to original lay, may be acceptable.

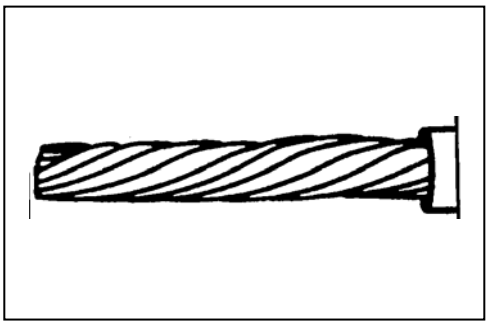

FIGURE A-13

UNACCEPTABLE

Excessive retwist.

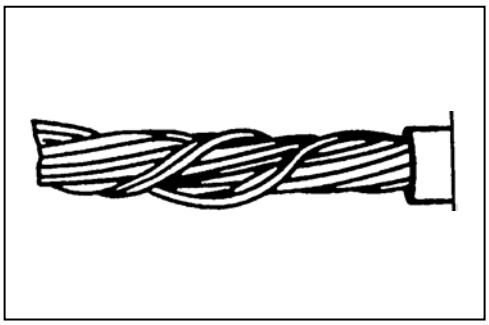

FIGURE A-14

UNACCEPTABLE

Wire strands retwisted in excess of normal lay and overlapped.

WIRING: CONNECTORS, CABLING, AND HARNESSING,
WIRE PREPARATION, THERMAL STRIPPING

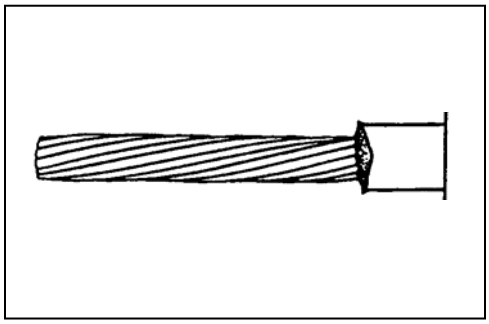

FIGURE A-15

PREFERRED

Insulation stripped by thermal stripping shall have minimum edge flash with no damage to the wire strands.

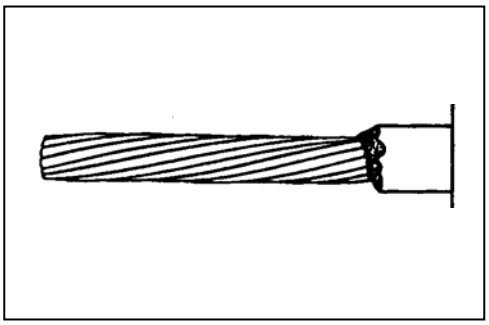

FIGURE A-16

ACCEPTABLE

Mechanical or thermal stripped insulation irregularity is acceptable if it does not exceed 1/4 of the outside diameter of the wire with insulation.

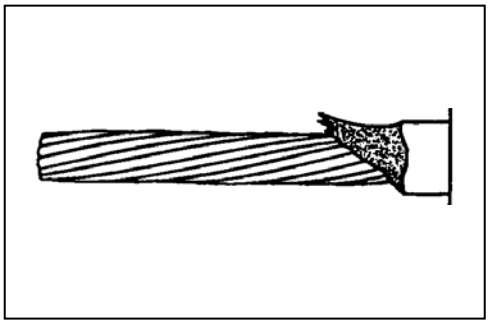

FIGURE A-17

ACCEPTABLE MINIMUM

Edge flash, due to improper stripping, should not exceed 1/4 of the outside diameter of the wire with insulation.

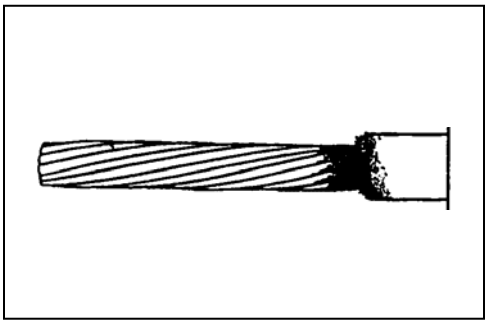

FIGURE A-18

NONCONFORMING

Burned or charred insulation, as shown, is the result of improper application of heat.

WIRING: CONNECTORS, CABLING, AND HARNESSING, WIRE PREPARATION, TINNING STRANDED CONDUCTORS

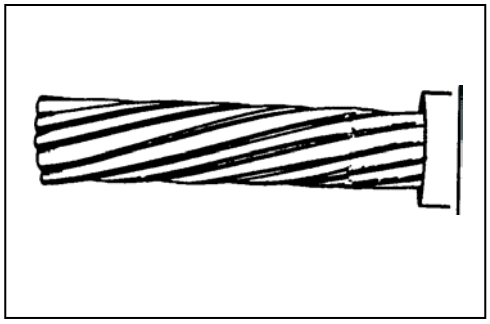

FIGURE A-19

PREFERRED

1. Complete wetting of the tinned area has resulted in a bright, thin, and even tinning of the strands
2. Tinning has reached insulation, but wicking is minimal.

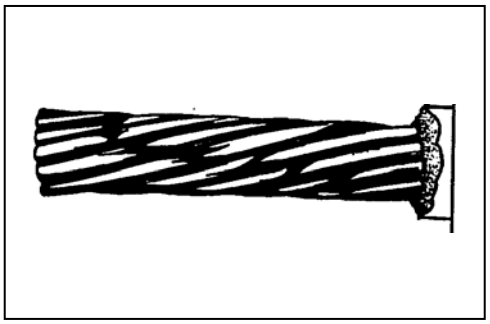

FIGURE A-20

ACCEPTABLE

Traces of solder wicking under insulation, but the contour of the stranding is easily discernible.

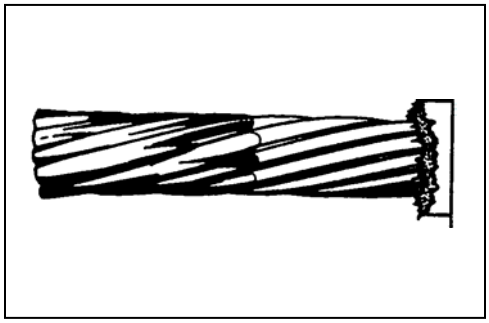

FIGURE A-21

ACCEPTABLE

Length of tinning is determined by type of termination; however, it should be sufficient to prevent separation of strands when wire is wrapped around a terminal.

WIRING: CONNECTORS, CABLING, AND HARNESSING - INSTALLATION OF STRAPS

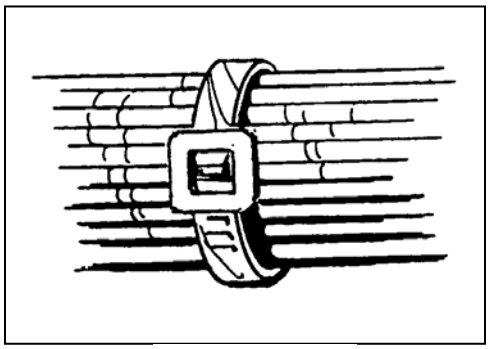

FIGURE A-22

ACCEPTABLE

1. Conductors secured with a plastic strap.
2. When tightened correctly, strap will not move laterally along the bundle under normal handling but can be rotated in place.

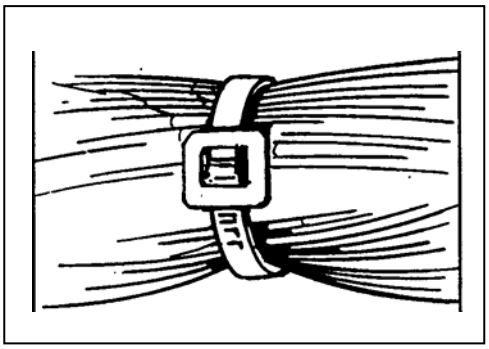

FIGURE A-23

UNACCEPTABLE

Strap is too tight and is deforming the insulation on the wire.

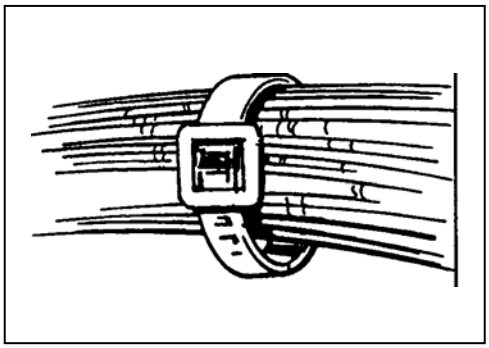

FIGURE A-24

UNACCEPTABLE

Strap is too loose and will slip easily along the bundle with normal handling.

CRIMPS: INSULATION CLEARANCE

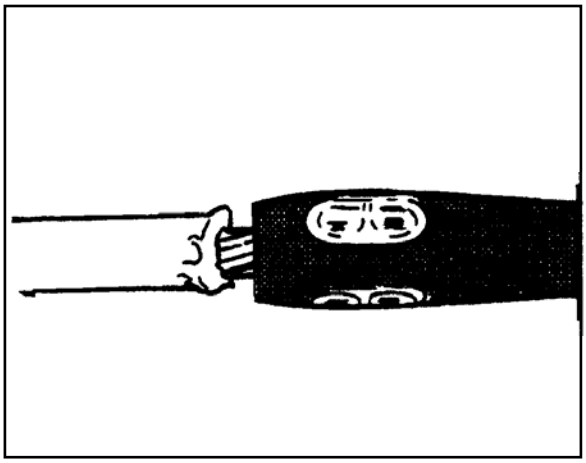

FIGURE A-25

MINIMUM CONDUCTOR EXPOSURE

Insulation terminates 0.010 in. minimum from contact crimp barrel.

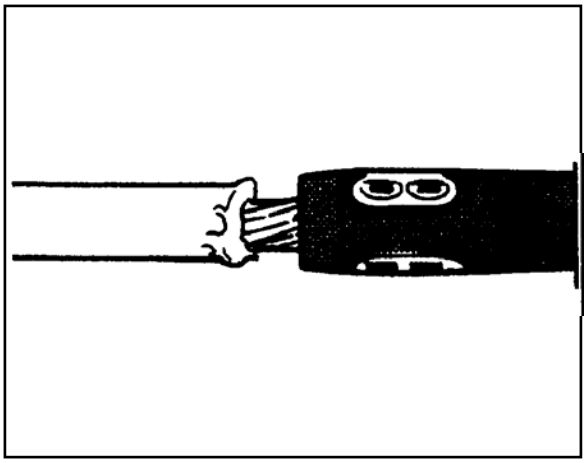

FIGURE A-26

MAXIMUM CONDUCTOR EXPOSURE

Amount of exposed bare wire between the insulation and the contact crimp barrel does not exceed 0.03 inch maximum for No. 20 AWG wire and smaller, and 0.05 inch maximum for No. 18 AWG wire and larger.

CRIMPS: ACCEPTABLE AND UNACCEPTABLE

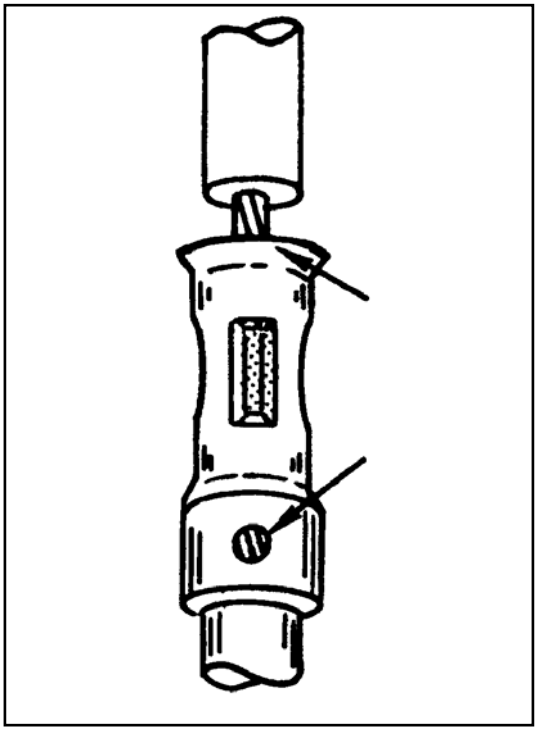

FIGURE A-27

ACCEPTABLE

Care should be taken when seating contacts in the crimping tool. The tool indentors should crimp the contact midway between the shoulder of the insulation support and the inspection hole. The wire is visible in the inspection hole.

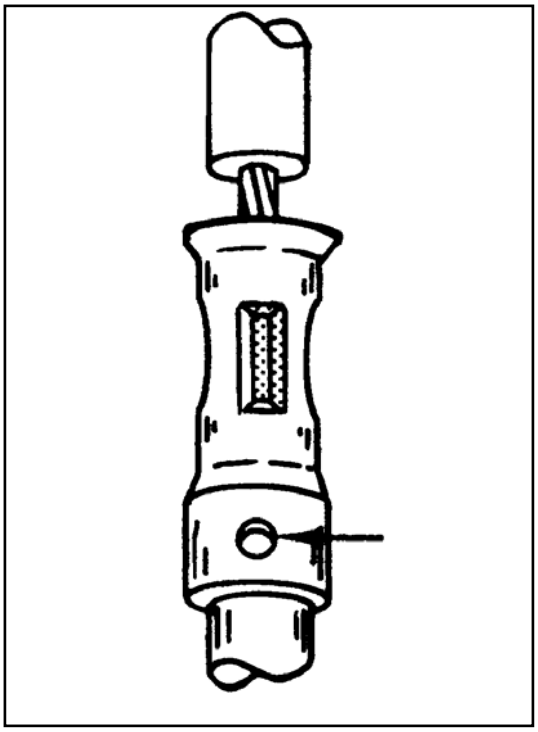

FIGURE A-28

UNACCEPTABLE

If the wire is not stripped back far enough or incorrectly seated in the contact, the wire will not be visible in the inspection hole, as shown.

CRIMPS: UNACCEPTABLE

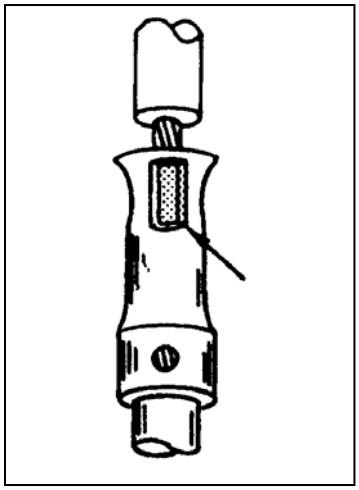

FIGURE A-29A

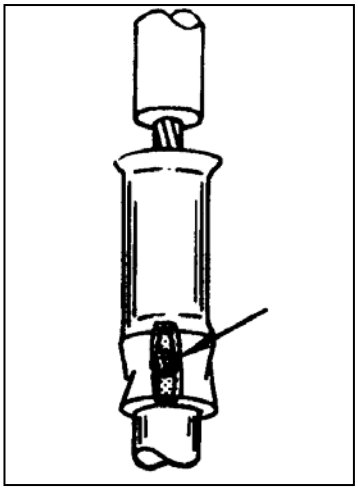

FIGURE A-29B

Failure to properly seat contact in crimping die, or use of incorrect crimping tool will result in improperly crimped contacts. Crimping over the inspection hole or on the radius of the shoulder as shown in Figures A-29A and A-29B is unacceptable.

UNACCEPTABLE PIN

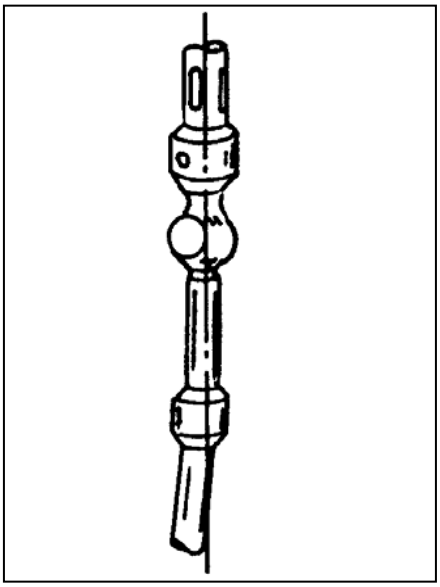

FIGURE A-30

APPENDIX B - CRITICAL PROBLEMS IN COAXIAL CABLE ASSEMBLY

Because of poor connector design, faulty assembly instructions, or wrong choice of materials, certain types of coaxial cable assembly failures occur frequently. Problem areas are as follows:

Plastic Jacket Layer in the Compression System. Certain manufacturers' RF-connector designs or assembly instructions allow the jacket to be in the clamping system. For example, the metal clamp nut presses against the teflon cable jacket, which presses against the metal braid, which presses against the metal cable barrel of the connector. The problem encountered with this arrangement is that after torquing, the teflon jacket cold-flows, and the connection becomes loose. Intermittent circuits and system failure can result. Either this type of connector should not be used, or the plastic jacket should be trimmed back so that only metal-to-metal compression exists (see Figure B-1). If the connector design is such that satisfactory metal-to-metal compression cannot be achieved after torquing, the connector should not be used.

Inadequate Center Conductor to Center Contact Solder Joint. Certain manufacturers recommend that the center conductor be tinned, and that this tinned conductor be placed in the center contact. Then, the solder joint between the center conductor and center contact is made by reflowing the tinning in the center contact. Invariably, this makes an insufficient solder joint (see Figure B-2). A sufficient solder joint is made by placing a small length of rosin core solder in the contact wire well, e.g., 3.17mm (0.125 inch) length, 0.38 mm (0.015 inch) diameter. The center conductor is inserted into the wire well and the contact is heated to melt the solder and position the contact on the center conductor.

Breakage of Stress-Relief Sleeving. In assemblies where shrinkable sleeving is used to provide stress relief from a connector ferrule to the cable, there is often a major transition in diameter as shown in Figure B-3. If MIL-I-23053/8 sleeving is used for stress relief, it often cracks at the large diameter of the transition. The use of MIL-I-23053/8 sleeving for these applications should be avoided.

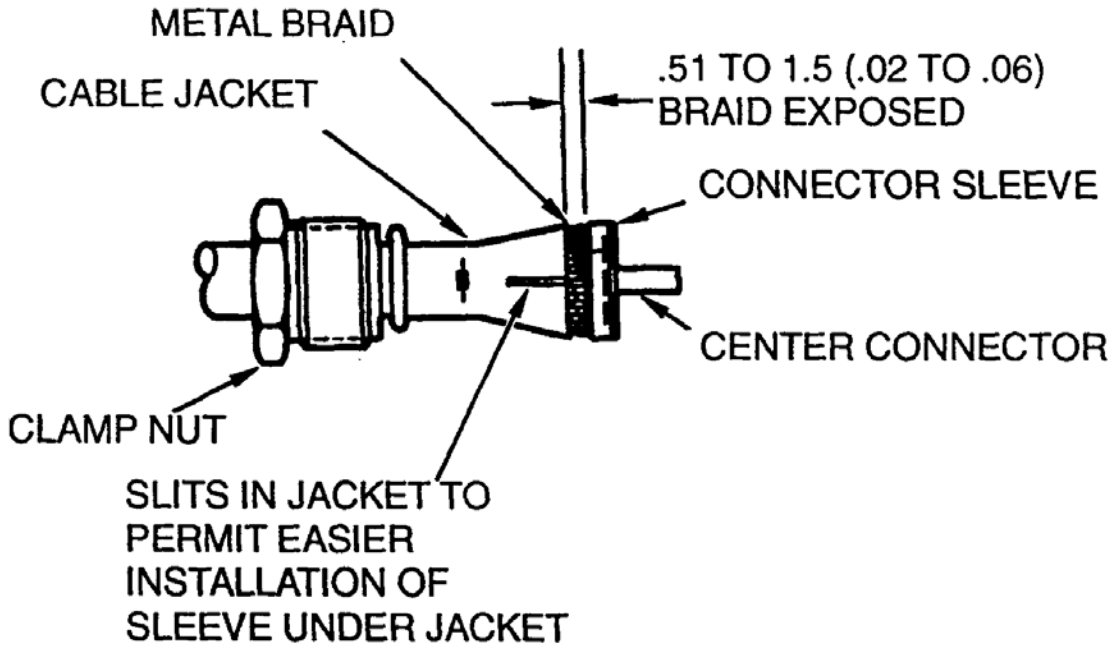

A. INADEQUATE EXPOSURE OF METAL BRAID. JACKET MAY BE IN CLAMPING SYSTEM

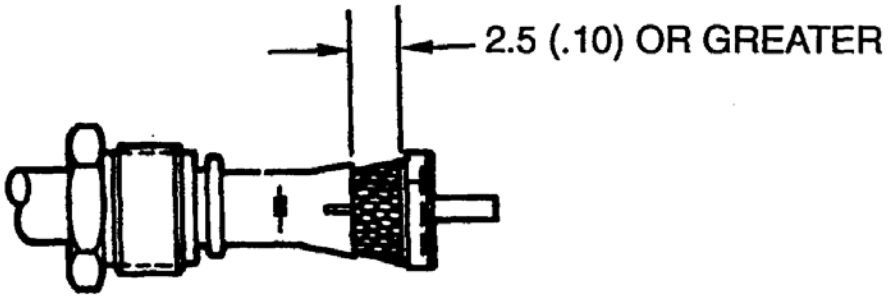

B. PROPER EXPOSURE OF METAL BRAID SO JACKET WILL NOT BE IN CLAMPING SYSTEM

DIMENSIONS IN MILLIMETERS (INCHES)

Figure B-1. Illustration of Proper Trimback of Jacket to Isolate it from the Clamping System

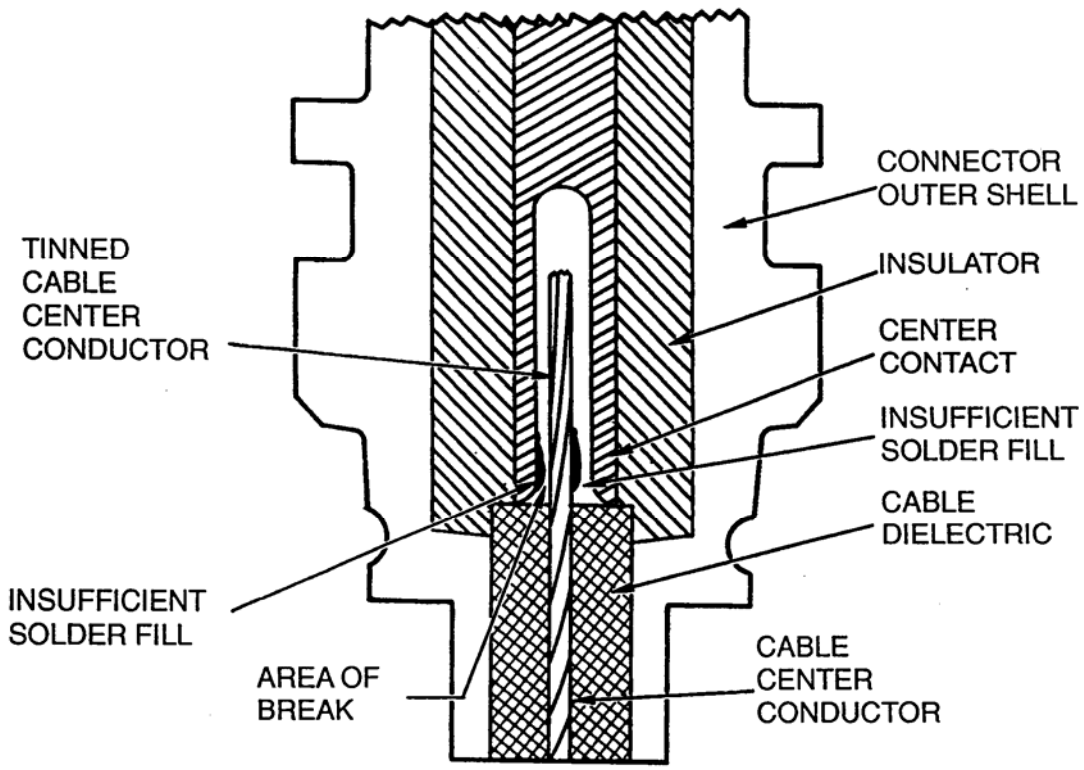

Figure B-2. Broken Solder Joint Caused by Insufficient Solder Fill

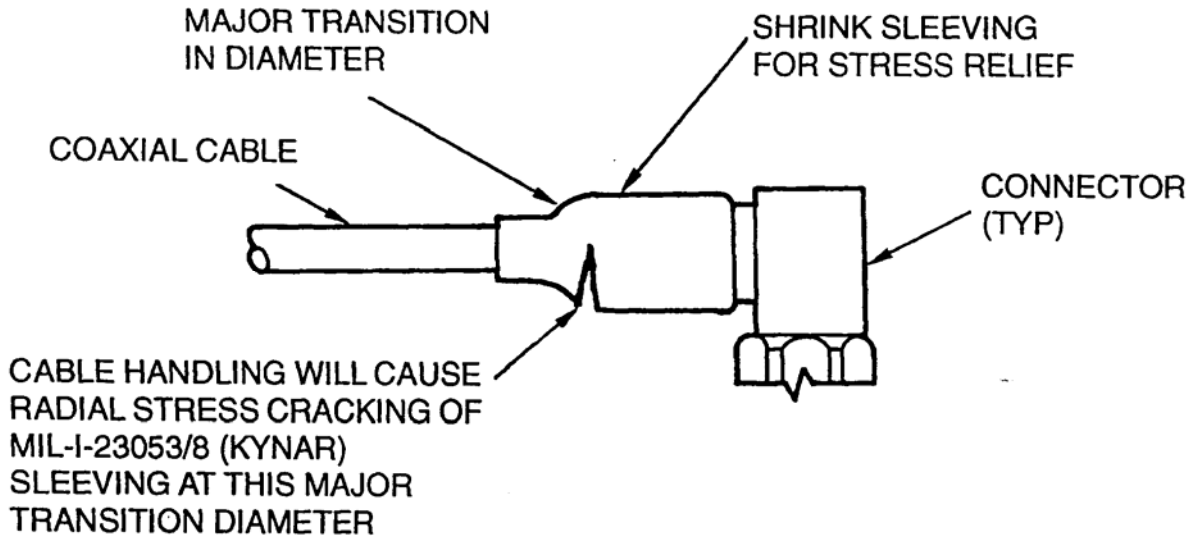

Figure B-3. Problem Point for Kynar Stress Relief Sleeving

NASA TECHNICAL STANDARD IMPROVEMENT PROPOSAL

(See Instructions - Reverse Side)

1. DOCUMENT NUMBER	2. DOCUMENT TITLE
3. NAME OF SUBMITTING ORGANIZATION	
4. ADDRESS (Street, City, State, ZIP Code)	
5. PROBLEM AREAS a. Paragraph Number and Wording b. Recommended Wording: c. Rational for Recommendation:	
6. REMARKS	

7. NAME OF SUBMITTER	8. TELEPHONE NO.	9. DATE

INSTRUCTIONS

In a continuing effort to improve our NASA Technical Standards, we invite all holders to use this form for submitting comments and suggestions for improvements. All users of NASA documents are invited to provide suggestions. The form may be detached and mailed. In block 5, be as specific as possible about particular problem areas, such as wording changes, which would alleviate the problems. Enter in block 6 any remarks not related to a specific paragraph of the document. An acknowledgment will be mailed to the submitter within 30 days. Supporting data should accompany any recommendations for changes.

NOTE: ***This form may not be used to request copies of documents, nor to request waivers, deviations, or clarification of Standard requirements on current contracts. Comments submitted on this form do not constitute or imply authorization to waive any portion of the referenced document(s) or to amend contractual requirements.***

Proposals may be submitted to:

NASA Technical Standards Coordinator
NASA Headquarters
Office of Safety and Mission Assurance
Safety and Assurance Requirements Division
Washington, DC 20546-0001