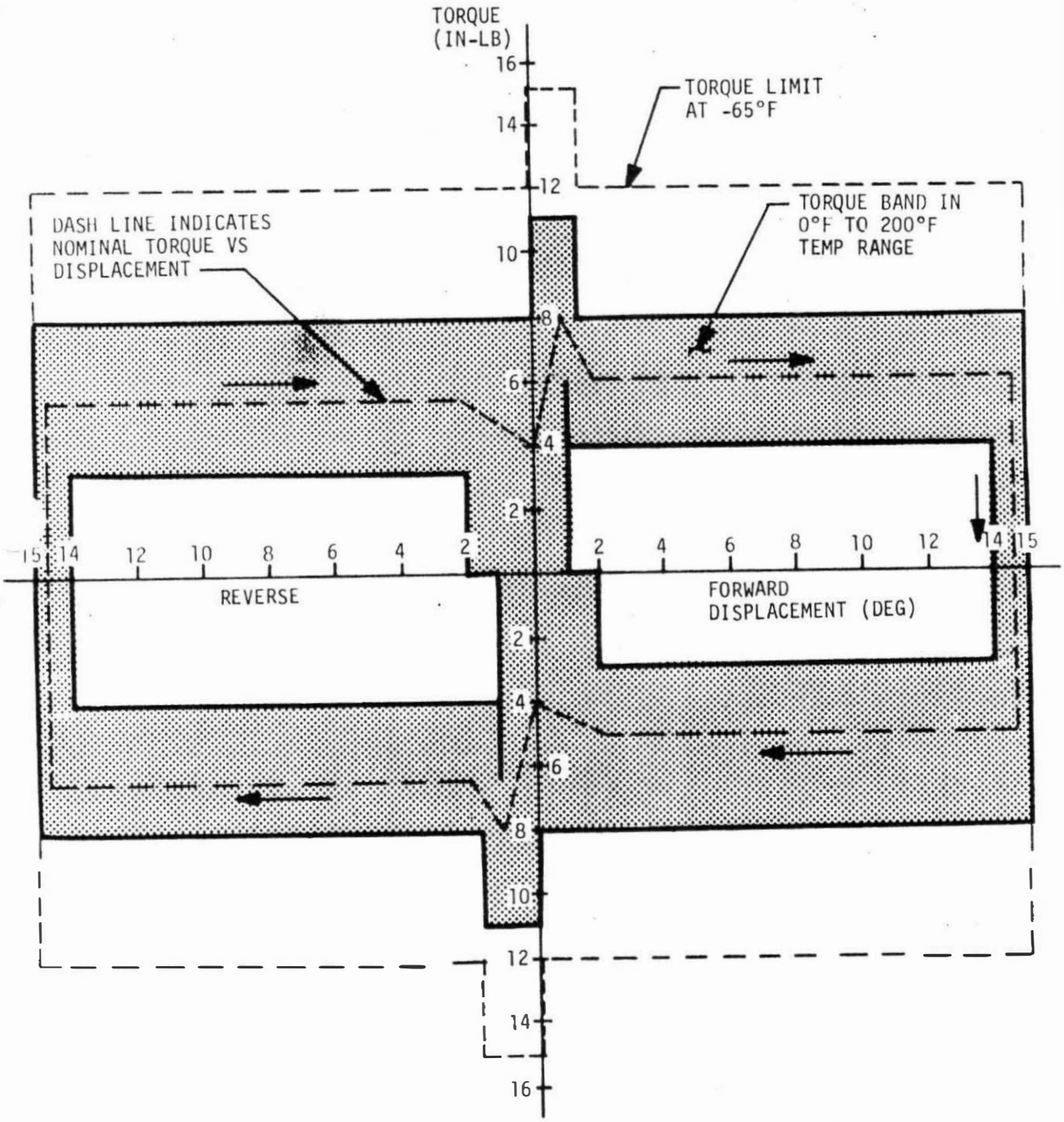

FIGURE 1-12 TORQUE REQUIRED TO ROTATE HAND CONTROLLER FOR THROTTLE CONTROL

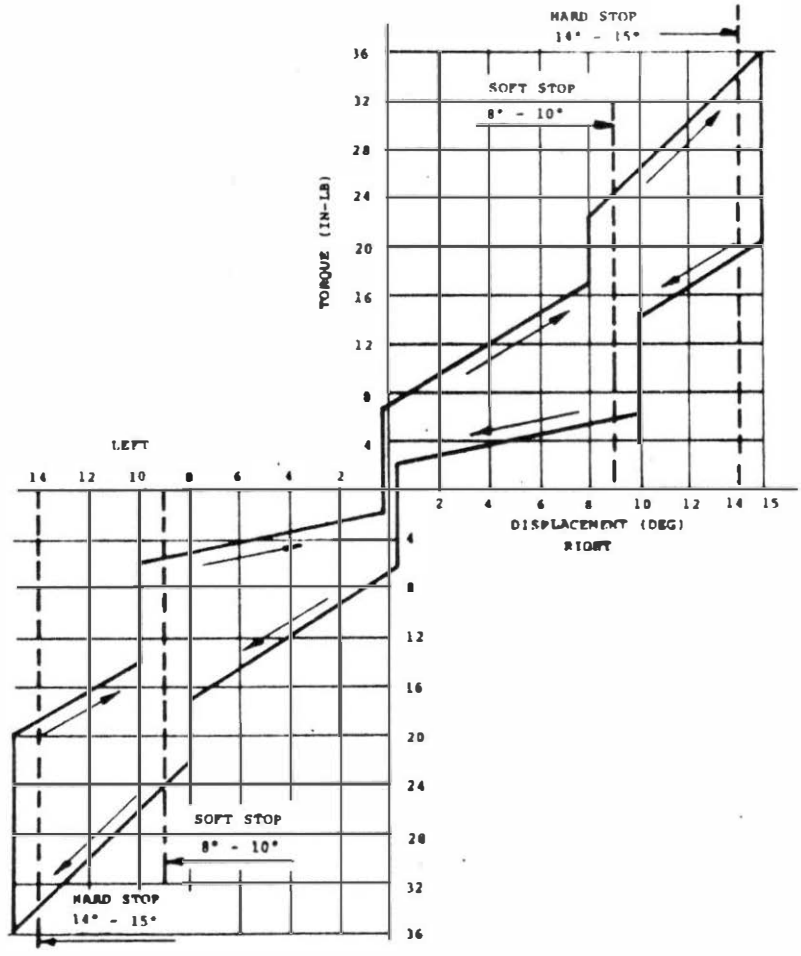

FIGURE 1-13 TORQUE REQUIRED TO ROTATE HAND CONTROLLER FOR STEERING CONTROL

1.3.5.2 (Continued)

position, the torque required to pivot the hand controller further outboard increases linearally with displacement until the hand controller hard stop limit is reached at the 14 degree outboard hand controller position.

The hand controller is spring loaded to return to the neutral steering position when released.

1.3.5.3 Braking Control

Braking is initiated with the LRV in either forward or reverse by pivoting the hand controller rearward about the brake pivot point. The force required to move the hand controller rearward to increase braking is shown in Figure 1-14. Forward and reverse power is disabled when the brake is displaced 15 degrees.

A three inch rearward displacement of the hand controller engages and locks the parking brake. To disengage the parking brake, the hand controller is placed in the steer left position. A contingency release (figure 1-11) is provided should the brake fail to release when moved to the steer left position. Contingency brake release is effected by moving the brake to full rearward displacement, pulling the release ring, allowing the brake to release and then releasing the ring.

1G Trainer Notes

1. The 1G Trainer hand controller operation (speed, steering and brake) is identical to the LRV hand controller operation, with the exception: If the hand controller is in full throttle position when full brakes are applied, drive power will not be automatically cut-out. This condition (true for both forward and reverse operation) resulted as a consequence of by-passing the DCE logic to eliminate voltage drop and thereby increase trainer top speed.

2. The 1G Trainer brake cables can be adjusted to provide simulated lunar surface stopping characteristics.

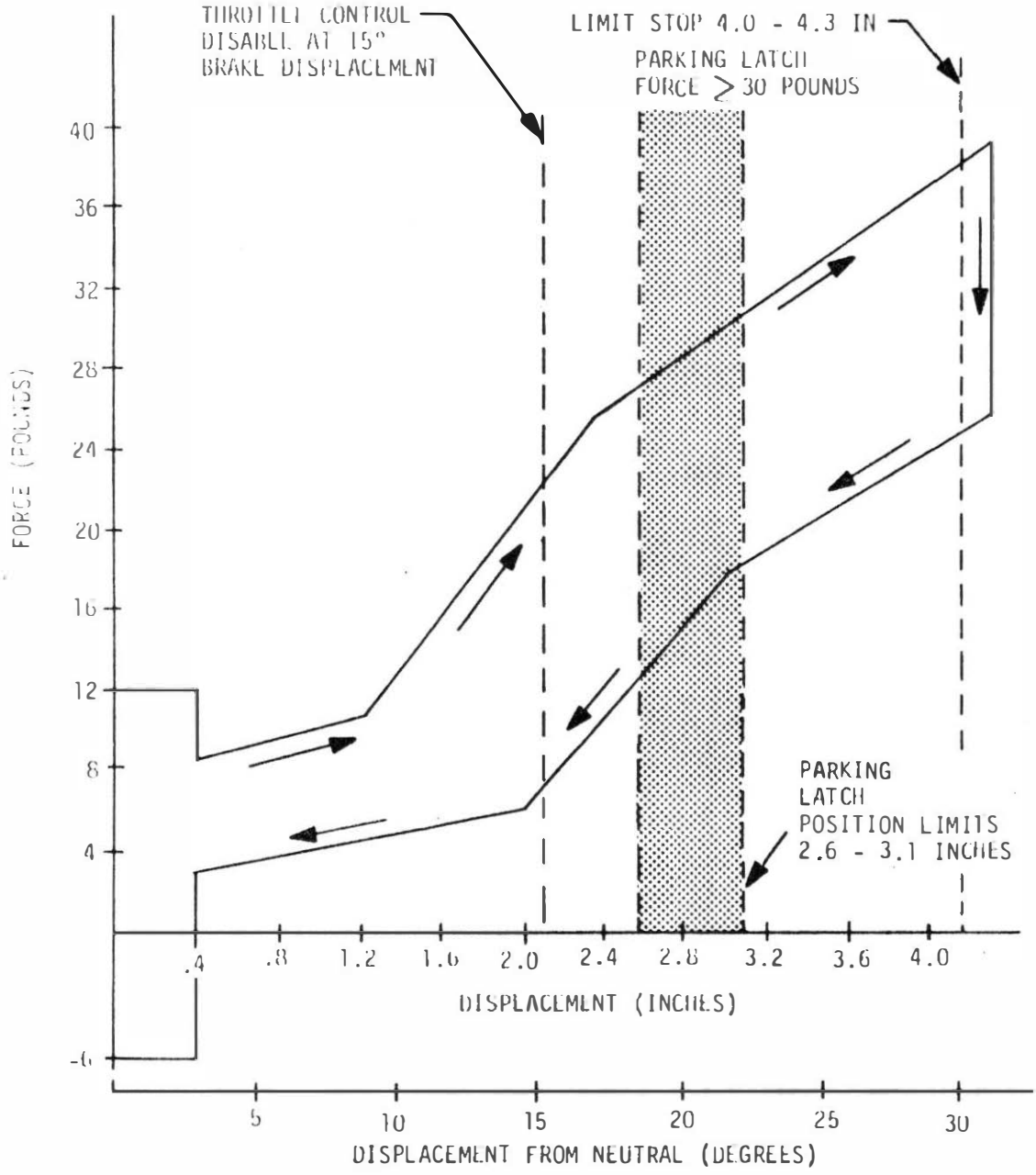

FIGURE 1-14 BRAKE CONTROL FORCE VS DISPLACEMENT

1.3.7 Drive Control Electronics

The Drive Control Electronics (DCE) accepts forward and reverse speed control signals from the Hand Controller and transmits them to the drive motors in a format which allows drive motor speed control. The steering logic servo amplifier assembly (previously described in paragraph 1.3.4 and figure 1-9) is also contained within the DCE. In addition, the Drive Control Electronics accepts odometer signals from the traction drives and processes the signals for odometer/speedometer readout. The basic manner of operation of the DCE is described below and illustrated in figure 1-15.

When the Hand Controller is actuated in either the forward or reverse positions, two basic signals are generated. One signal is constant voltage signal (A) to the traction drive electronics logic which tells whether the Hand Controller is on the forward or reverse side of neutral, and thus causes relay action to control the direction of drive. The other signal (B) is from the command potentiometers and is a variable voltage which reflects the amount of speed desired. This latter signal is proportional to the position of the Hand Controller and is fed to the Pulse Width Modulators (PWM) where the signal is "chopped" into pulses whose width is proportional to the incoming signal strength. The modulated signal (C) is then fed through the Drive Enable switches (astronaut operated) for each Drive Motor whose function is to determine whether the command signal for each drive motor is to be derived from PWM #1 or PWM #2. The position of the PWM select switch -- astronaut operated -- allows disabling of a defective PWM if desired.

1G Trainer Note

The 1G Trainer Drive Enable PWM 1 and PWM 2 positions are common "ON" positions. PWM 1 is an integral part of Drive Controller No. 1 which powers only the two front drive motors and similarly PWM 2 is an integral part of Drive Controller No. 2 which powers only the two rear motors.

After the modulated signal (C) has passed through the Drive Enable switch for each traction drive, it enters a gating switch which serves several purposes. First, it inhibits drive power if the brake is on (D). Second, if drive current becomes excessive, it inhibits drive power until the current level falls to an acceptable value (E). Third, it inhibits drive power momentarily while the Hand Controller is being switched from forward to reverse or reverse to forward (F). If none of these three inhibits is present, then the gate passes the modulated signal (C) on to the power switching driver and the power switch, which produce the proper power levels for motor control (G).

The last step prior to application of power to the motor is selection of forward or reverse motor drive. This is accomplished by the reversing relay and relay driver. The relay driver determines the position of the reversing relays and is actuated by position of the Hand Controller (forward or reverse)

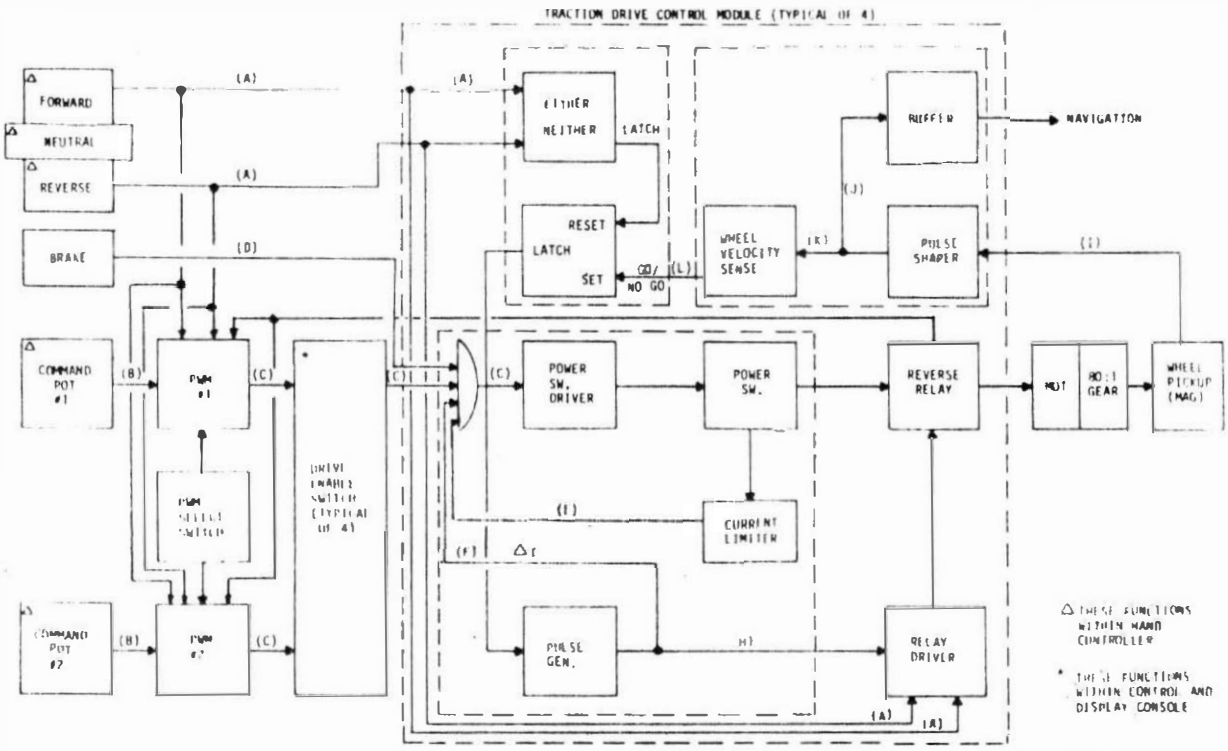

DRIVE CONTROL ELECTRONICS - BLOCK DIAGRAM

FIGURE 1-15 DRIVE CONTROL ELECTRONICS - BLOCK DIAGRAM

1.3.7 (Continued)

and a signal from the pulse generator (H) which indicates the power to the drive motor has been inhibited and switching can take place. The condition of the reversing relays determine the direction of current through the motor armature and thus the direction of rotation of the motor. The wheels are driven through 80:1 ratio harmonic drive units as explained in paragraph 1.3.3.

Each traction drive has a magnetic pickup for sensing the rotational motion of each wheel. This signal (I) is picked up as a series of pulses and transmitted back into the Traction Drive Control Module where it is properly pulse shaped for use and then used for two purposes. One, it is fed (J) through a buffer to the navigation subsystem for the odometer. Two, it is fed (K) to a wheel velocity sensing circuit which determines if the wheel velocity is greater than 1 KPH. If it is, a signal (L) is sent to the traction drive electronics logic to disallow switching from forward to reverse or reverse to forward until wheel speed drops below 1 KPH. From 1 KPH to full stop the state of the inhibit circuit may be indeterminate, thus it is imperative that the vehicle be brought to a full stop before a direction change is commanded.

1.4 ELECTRICAL POWER SUBSYSTEM

The electrical power subsystem consists of two batteries, distributing wiring, connectors, switches, circuit breakers and meters for controlling and monitoring electrical power.

1.4.1 Batteries

The LRV contains two primary silver zinc batteries (figure 1-16) each having a nominal voltage of 36 (+5/-3) VDC and each having a capacity of 115 ampere hours. Both batteries are normally used simultaneously on an approximate equal load basis during LRV operation by selection of various load-to-bus combinations through circuit breakers and switch settings on the control and display console.

The batteries are located on the forward chassis enclosed by the thermal blanket and dust covers (figure 1-17). Battery No. 1 (on the left side) is connected thermally to the navigation Signal Processing Unit (SPU), and serves as a partial heat sink for the SPU. Battery No. 2 (on the right side) is thermally tied to the navigation Directional Gyro Unit (DGU) and serves as a heat sink for the DGU.

The batteries are installed in the LRV on the pad at KSC in an activated condition and are monitored for voltage and temperature on the ground until approximately T-18 hours in the countdown. On the lunar surface, the batteries are monitored for temperature, voltage, output current, and remaining ampere-hours. These displays are located on the control and display panel.

Each battery is protected from excessive internal pressure by a pressure relief valve that is set to open at 3.1 to 7 PSI differential pressure. The relief valve closes when the differential pressure is below the valve's relief pressure. Each battery is capable of carrying the entire LRV electrical load, and the circuitry is designed such that in the event one battery fails, the entire electrical load can be switched to the remaining battery. LRV range capability is shown in Appendix A.

1G Trainer Notes

1. 1G Trainer uses two rechargeable nickel cadmium batteries having a voltage output of 34 VDC and a capacity of 24 ampere hours each. Both batteries must be used for 1G Trainer operation.

2. 1G Trainer estimated operation time before recharge for a set of batteries (two batteries per set) is 63 minutes on smooth level ground (800 pound payload configuration and 10 KPH). This estimate includes 19 minutes of stand-by time.

(Continued)

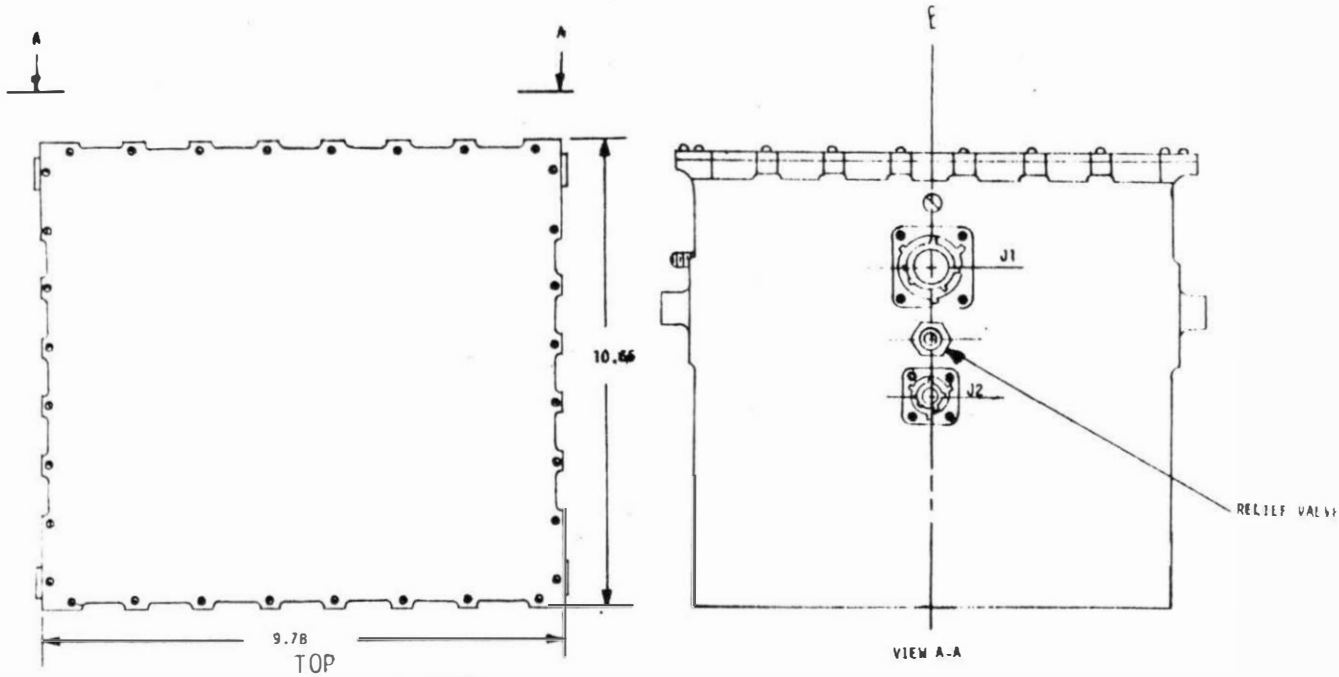

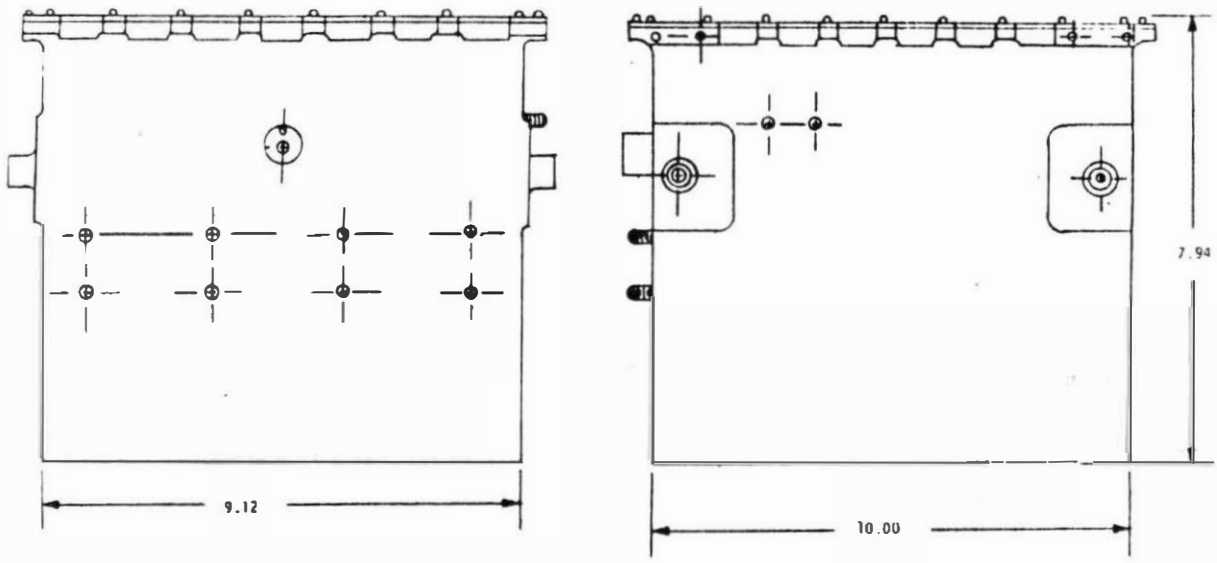

FIGURE 1-16. LRV BATTERY CONFIGURATION

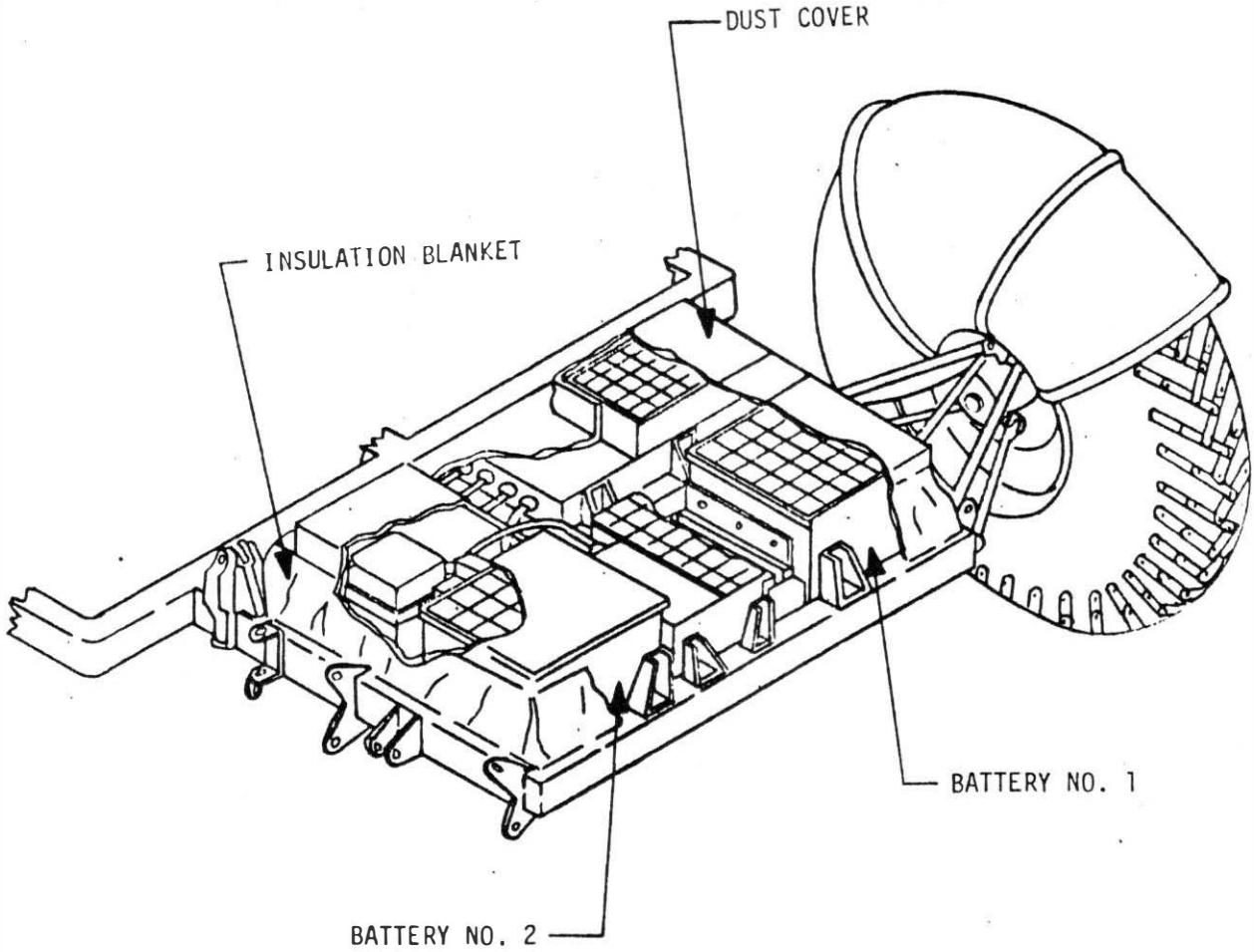

FIGURE 1-17 LRV BATTERIES, THERMAL BLANKET AND DUST COVERS

1G Trainer Notes
(Continued)

3. The 1G Trainer batteries are fan cooled when internal temperatures rise above a preset thermostatic switch value. The batteries are not covered by a thermal blanket.

1.4.2 Distribution and Monitoring System

The electrical distribution and monitoring schematics for the LRV are shown in figures 1-18 and 1-19. The switch and circuit breaker arrangement is designed to allow switching any electrical load to either battery.

During normal LRV operation, the navigation system power remains on during the entire sortie. To conserve power for increased range, all mobility elements (i.e., traction drives, steering motors, electronic controller, and PWM power supplies) are turned off if a stop is to exceed 5 minutes duration.

1G Trainer Note

The 1G Trainer has alternate provision for utilizing an external power source by means of a rotary switch selector (figure 8-3) and umbilical connector.

1.4.3 Caution and Warning System

Refer to figure 1-20 for the caution and warning system schematic. The normally open temperature switches in the batteries and drive motors close on increasing temperatures. When either battery reaches 125°F or any drive motor reaches 400°F, the temperature switch closes, energizing the "OR" logic element and the driver. The driver then sends a 10 millisecond 36V pulse to the coil of the electromagnet which releases the magnetic hold on the indicator at the top of the console and a spring loaded flag flips up. The astronaut can reset the flag by pushing it down even though the cause has not been eliminated. The flag will not flip up again unless an overtemperature occurs on another battery or traction drive or the initial overtemperature subsides and then reoccurs.

1G Trainer Notes

1. The 1G Trainer traction drive gear box thermal switches will actuate the warning flag when gear box temperature reaches 200°F. The gear box temperature readout is biased so a reading of 450°F to 500°F will exist when the thermal switch actuates.
2. The 1G Trainer motor temperature switches are set to actuate the flag when motor external case temperature reaches 275°F. This temperature at the case would correspond to a rotor temperature of about 450°F.

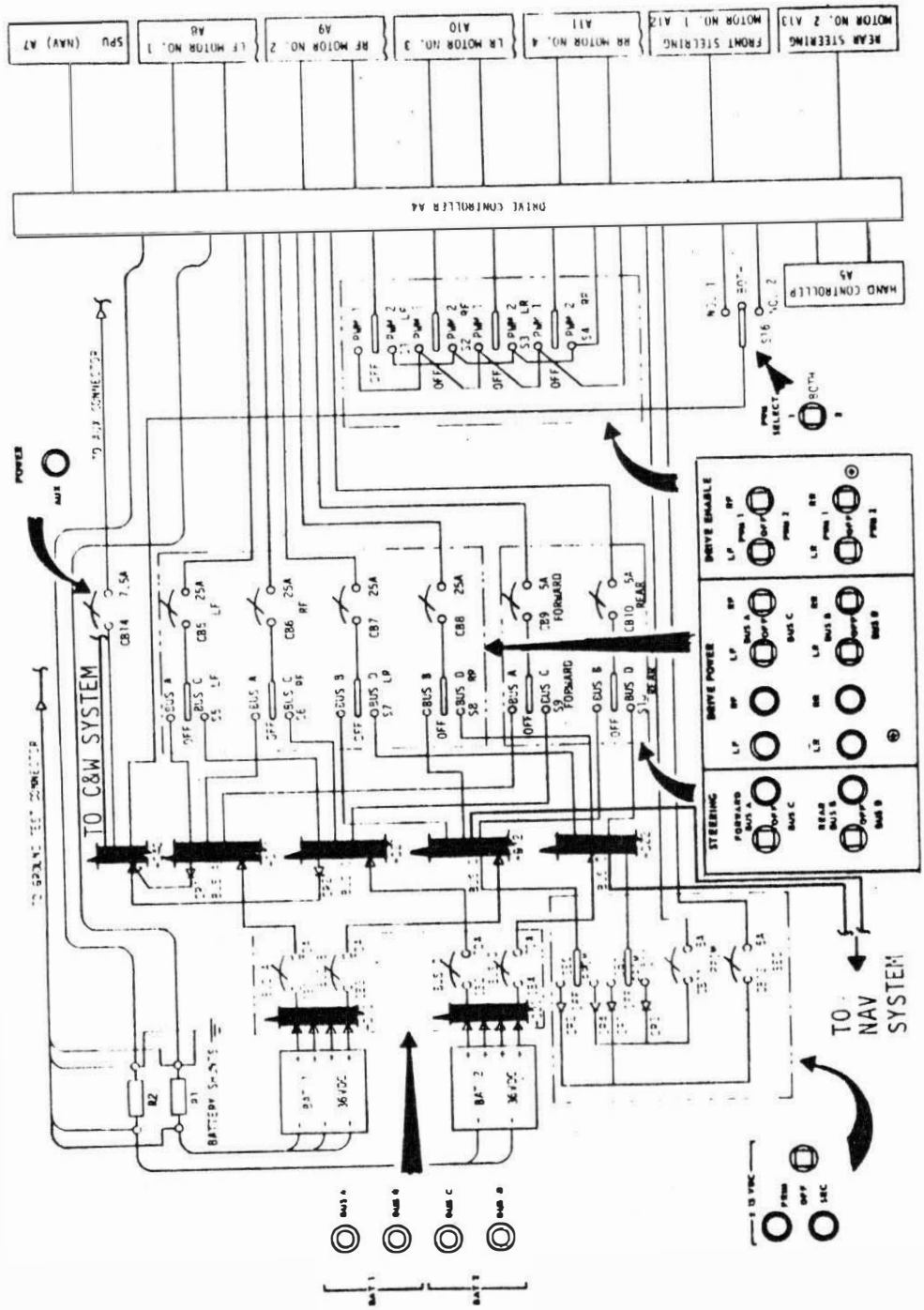

FIGURE 1-18 POWER DISTRIBUTION SYSTEM SCHEMATIC

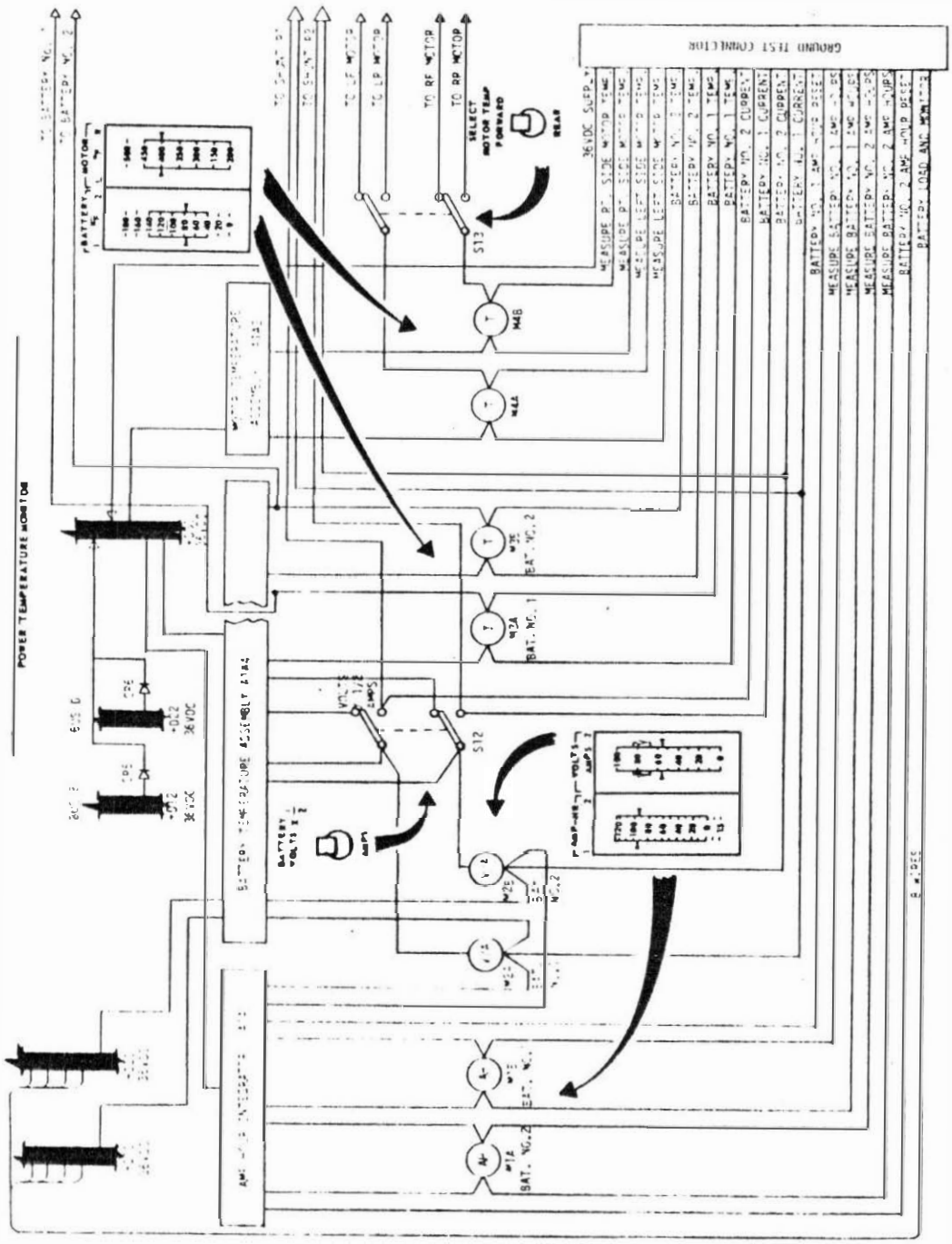

FIGURE 1-19 LRV MONITOR SCHEMATIC

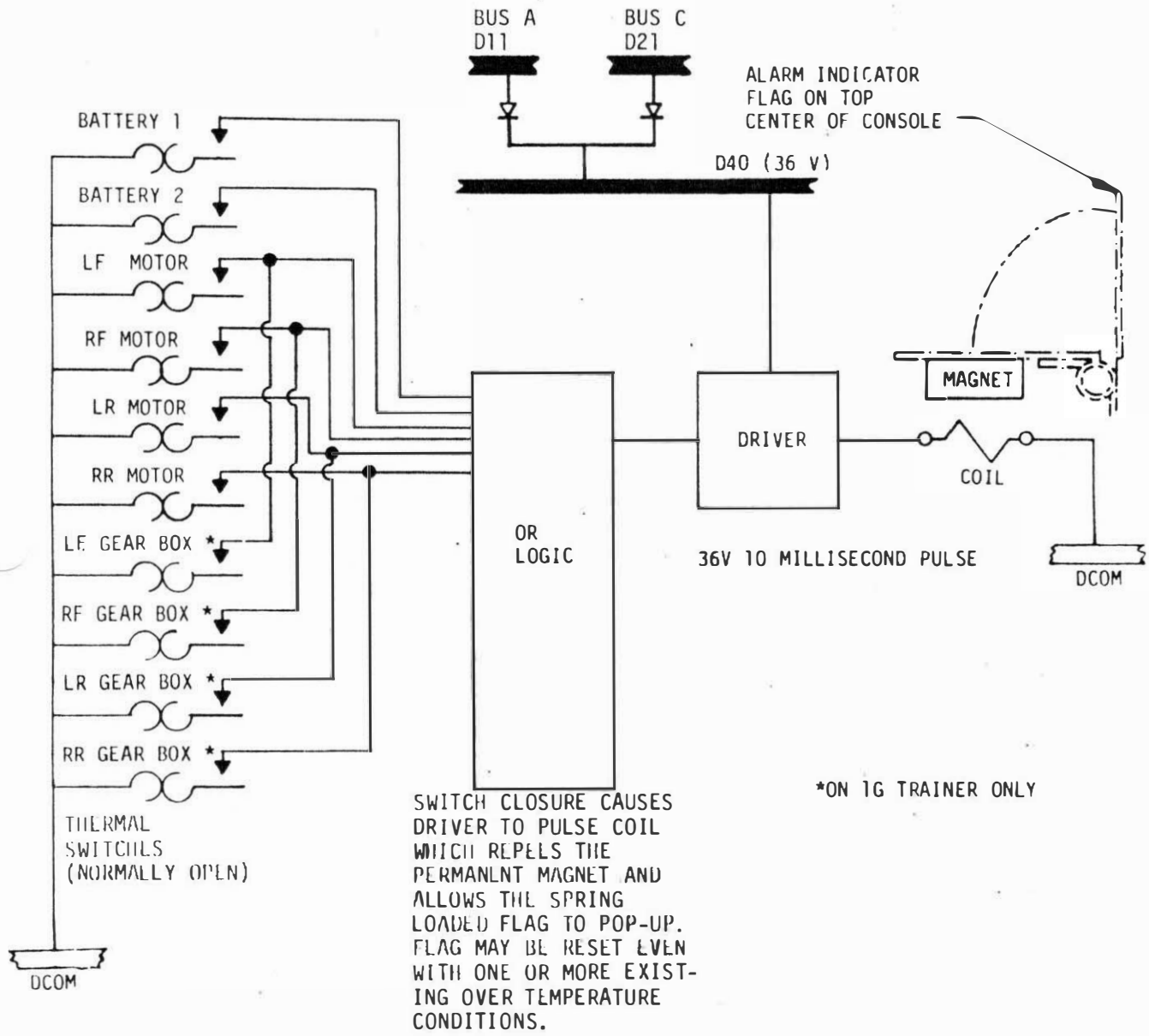

FIGURE 1-20. CAUTION AND WARNING SYSTEM

1.4.4 Auxiliary Connector

The auxiliary connector (figure 1-21) provides power for the Lunar Communications Relay Unit (LCRU). Power at the connector is furnished at 36 (+5/-3) VDC through a 7.5 ampere circuit breaker. Source impedance at the connector is less than 0.4 ohms shunted by a 440 micro-farad capacitor. Prior to launch, the LCRU power cable is attached to the auxiliary connector.

1G Trainer Note

The 1G Trainer auxiliary connector is not electrically functional.

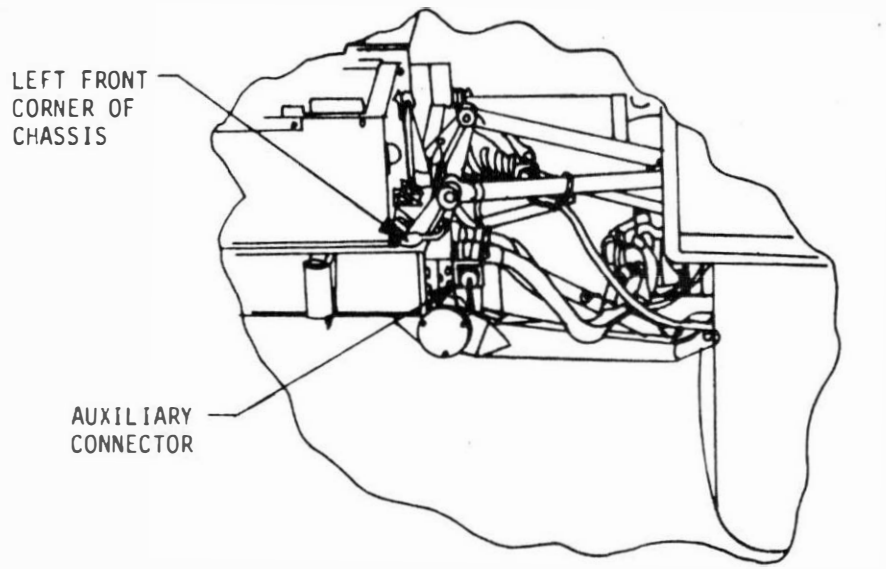

1G TRAINER

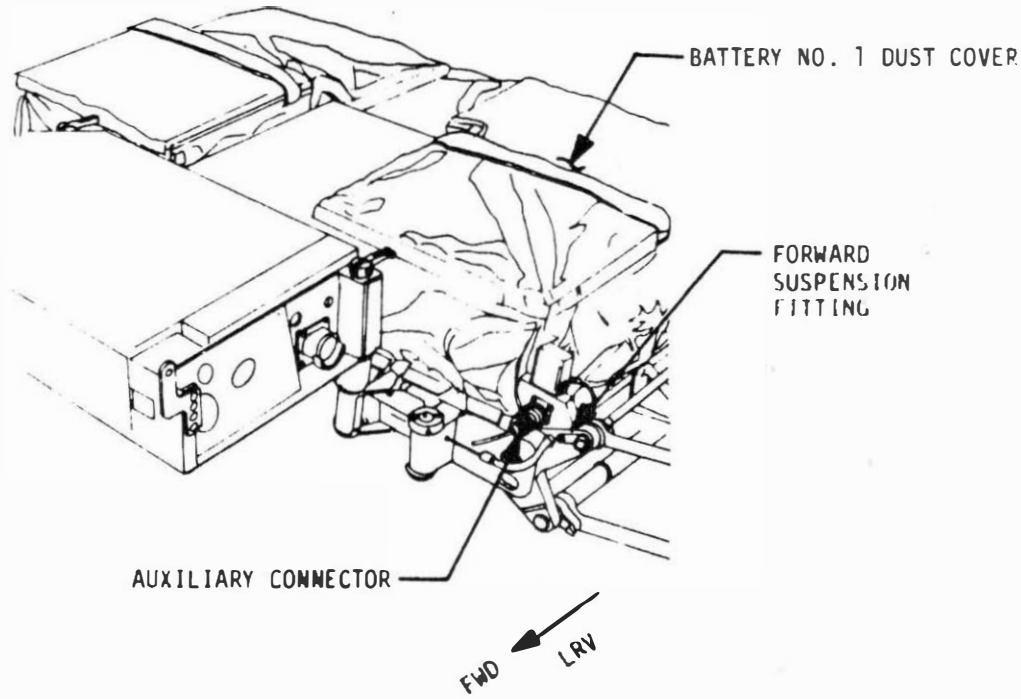

FIGURE 1-21. AUXILIARY CONNECTOR LOCATION

1.5 CONTROL AND DISPLAY CONSOLE

The Control and Display Console (figure 1-22) is separated into two main functional parts: Navigation on the upper part of the panel and monitoring and controls on the lower part of the panel. Refer to Table 1-1 for controls and use. The Control and Display Panel is activated with a radioluminescent material (Promethium) which provides visibility of displays even under lunar shadow conditions.

1.5.1 Attitude Indicator

This instrument (figure 1-26) provides indications of LRV pitch and roll. It indicates PITCH upslope (U) or downslope (D) within a range of plus 25 to minus 25 degrees in five degree increments and indicates ROLL within a range of 25 degrees left to 25 degrees right in one degree increments. The damper on the side of the indicator can be lifted to damp out oscillations. The pitch indication is readable in the stowed position of the indicator. The indicator is rotated outward which exposes the ROLL scale to the left side crewman. The pitch and roll reading is transmitted to MCC for navigation update computation.

1.5.2 Heading Indicator

This instrument displays the LRV heading with respect to lunar north. The initial setting and updating of this instrument is accomplished by operating the GYRO TORQUING switch LEFT or RIGHT.

1.5.3 Bearing Indicator

This instrument displays bearing to the LM in one degree digits. In the event of power loss to the navigation system, the bearing indication will remain displayed. The indications are lost when power is reapplied to the navigation system, however.

NOTE

> Insufficient data is available for bearing computation until the LRV has moved about 50 meters from the point of nav initialization, therefore, the display indication should be disregarded until the vehicle is at least 50 meters from the point of nav initialization.

1.5.4 Distance Indicator

NOTE

> Operating the LRV in reverse will add to the distance displayed on this instrument.

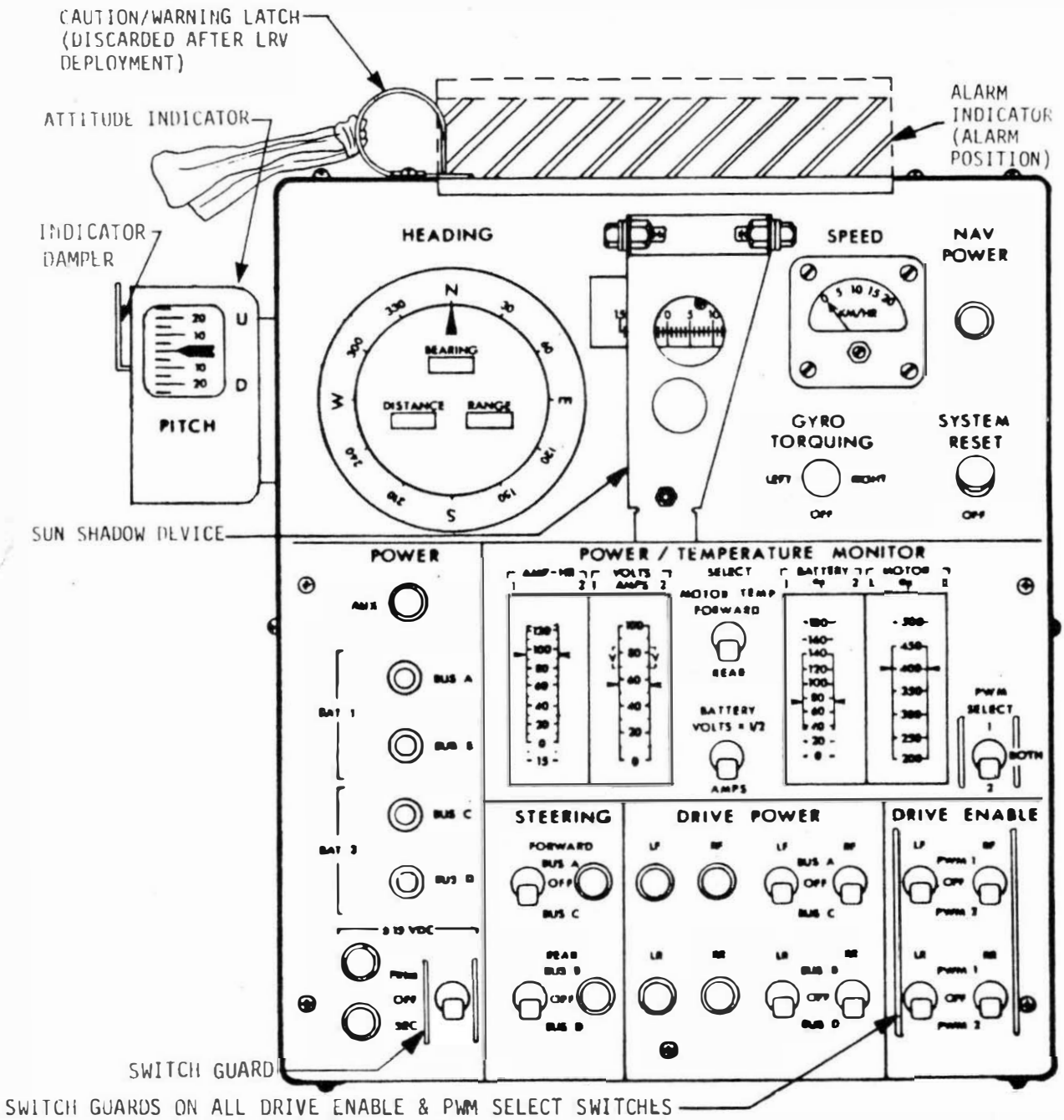

FIGURE 1-22 CONTROL AND DISPLAY CONSOLE

CONTROL	USE
GYRO TORQUING Switch	Adjusts heading indication during navigation updating. Switch is locked OFF in center position.
NAV POWER CB (5.0 Amps)	Routes power from main busses to navigation system. NOTE When Nav Power CB is open SPEED METER does not function.
AUX CB (7.5 Amps)	Energizes LRV Auxiliary Connector for LCRU power.
BAT 1 BUS A CB (70.0 Amps)	Energizes Bus A from LRV Battery No. 1.
BAT 1 BUS B CB (70.0 Amps)	Energizes Bus B from LRV Battery No. 1.
BAT 2 BUS C CB (70.0 Amps)	Energizes Bus C from LRV Battery No. 2.
BAT 2 BUS D CB (70.0 Amps)	Energizes Bus D from LRV Battery No. 2.
± 15 DC PRIM CB (5.0 Amps)	Routes power from ± 15 DC PRIM/SEC Switch to 15 VDC power supplies and protects primary ± 15 VDC power supply from overload.
± 15 DC SEC CB (5.0 Amps)	Redundant to ± 15 DC PRIM CB and protects secondary ± 15 VDC power supply from overload.
± 15 DC PRIM/SEC Switch	Routes 36 VDC power from Bus B or D through ± 15 VDC CB's and on to 15 VDC Power Supplies in Motor Controller.
SYSTEM RESET Switch	Resets BEARING, DISTANCE and RANGE indicators to zero.
AMP-HR Indicator	Monitors battery residual capacity.
VOLTS/AMPS Indicator	Monitors battery volts or LRV current (amps) consumption.

TABLE 1-1 CONTROL AND DISPLAY CONSOLE CONTROLS

CONTROL	USE
MOTOR TEMP SELECT Switch	Selects Forward or Rear drive motors to be monitored on MOTOR °F indicator.
Battery Select Switch	Selects battery voltage or current to be displayed on VOLTS AMPS indicator.
Battery °F Meter	Monitors temperature of batteries. Allowable temperature is 40°F to 125°F for each battery.
MOTOR °F Meter	Monitors temperature of each motor. Allowable temperature is 400°F for each drive motor.
PWM SELECT Switch	Energizes Pulse Width Modulators (PWM's) in Motor Controller. With Switch in position 1 or 2, only corresponding PWM is energized. With switch in position BOTH, both PWM's are energized.
FORWARD STEERING Switch	Selects Bus A or C to supply power to Forward Steering Motor.
REAR STEERING Switch	Selects Bus B or D to supply power to Rear Steering Motor.
FORWARD STEERING CB (5.0 Amps)	Protects Forward Steering Motor from overload current.
REAR STEERING CB (5.0 Amps)	Protects Rear Steering Motor from overload current.
DRIVE ENABLE Switches	Switches LF, RF, LR and RR - Select PWM 1 or 2 for control of drive motors.
DRIVE POWER Switches	Switches LF, RF, LR and RR - Select desired bus to supply power to drive motors.
DRIVE POWER CB's (25.0 Amps each)	Protects the four drive motors from overload damage.

TABLE 1-1 CONTROL AND DISPLAY CONSOLE CONTROLS
(Continued)

1.5.4 (Continued)

This instrument displays distance traveled by the LRV in increments of 0.1 kilometer. This display is driven from the navigation signal processing unit which receives its inputs from the third fastest traction drive odometer. Total digital scale capacity is 99.9 km. In the event of power loss to the navigation system the distance indicator at time of power loss will remain displayed.

1.5.5 Range Indicator

This instrument displays the distance to the LM, and is graduated in 0.1 km increments with a total digital scale capacity of 99.9 km. In the event of power loss to the navigation system the range indicated at time of power loss will remain displayed.

1.5.6 Speed Indicator

NOTE

When the NAV POWER circuit breaker is open, no speed indication will be attained.

The instrument shows LRV velocity from 0 to 20 km/hr. This display is driven from the odometer pulses from the right rear wheel, through the SPU.

1.5.7 Sun Shadow Device

This device is used to determine the LRV heading with respect to the sun azimuth. When deployed, the device casts a shadow on a graduated scale when the vehicle is facing away from the sun. The point at which the shadow intersects the scale is transmitted by the crew to MCC for navigation update. The scale length is 15 degrees either side of zero with one degree divisions. The sun shadow device can be utilized at sun elevation angles up to 75 degrees.

1.6 NAVIGATION SUBSYSTEM

Refer to figure 1-23 for the Navigation Subsystem Block Diagram; figure 1-24 for hardware locations, and figure 1-25 for electrical schematic.

The power supply converts the vehicle battery voltage to the AC and DC voltages required for operation of the navigation subsystem components. Signal outputs to the subsystem are: direction (obtained from a directional gyro) and distance (obtained from odometer pulses from each traction drive unit). These signals are operated on by the navigation subsystem which displays the results as: heading with respect to lunar north, bearing back to the LM, range back to the LM, total distance traveled and velocity.

NOTE

> The Navigation System is initialized by pressing the SYSTEM RESET button, which resets all digital displays and internal registers to zero. Initialization is only performed at the start of each EVA.

Alignment of the directional gyro is accomplished by measuring the pitch and roll of the LRV using the attitude indicator (figure 1-26), and measuring the LRV orientation with respect to the sun using the sun shadow device (figure 1-27). This information is relayed to MCC where a heading angle is calculated. The gyro is then adjusted by slewing with the torquing switch until the heading indicator reads the same as the calculated value. Slew rate is approximately 1.5 degrees per second.

The heading angle of the LRV is implicit in the output from the gyro, which is generated by a three wire synchro transmitter. The heading indicator in the IPI contains a synchro control transformer and an electromechanical servo system which drives the control transformer until a null is achieved with the inputs from the gyro.

NOTE

> The odometer logic cannot distinguish between forward and reverse wheel rotation. Therefore, reverse operation of the LRV adds to the odometer reading.

There are four odometers in the system, one for each traction drive unit. Nine odometer pulses are generated for each revolution of each wheel. These signals are amplified and shaped in the motor controller circuitry and enter the line receiver in the SPU. The odometer pulses from the right rear wheel enter the velocity processor for display on the LRV SPEED indicator.

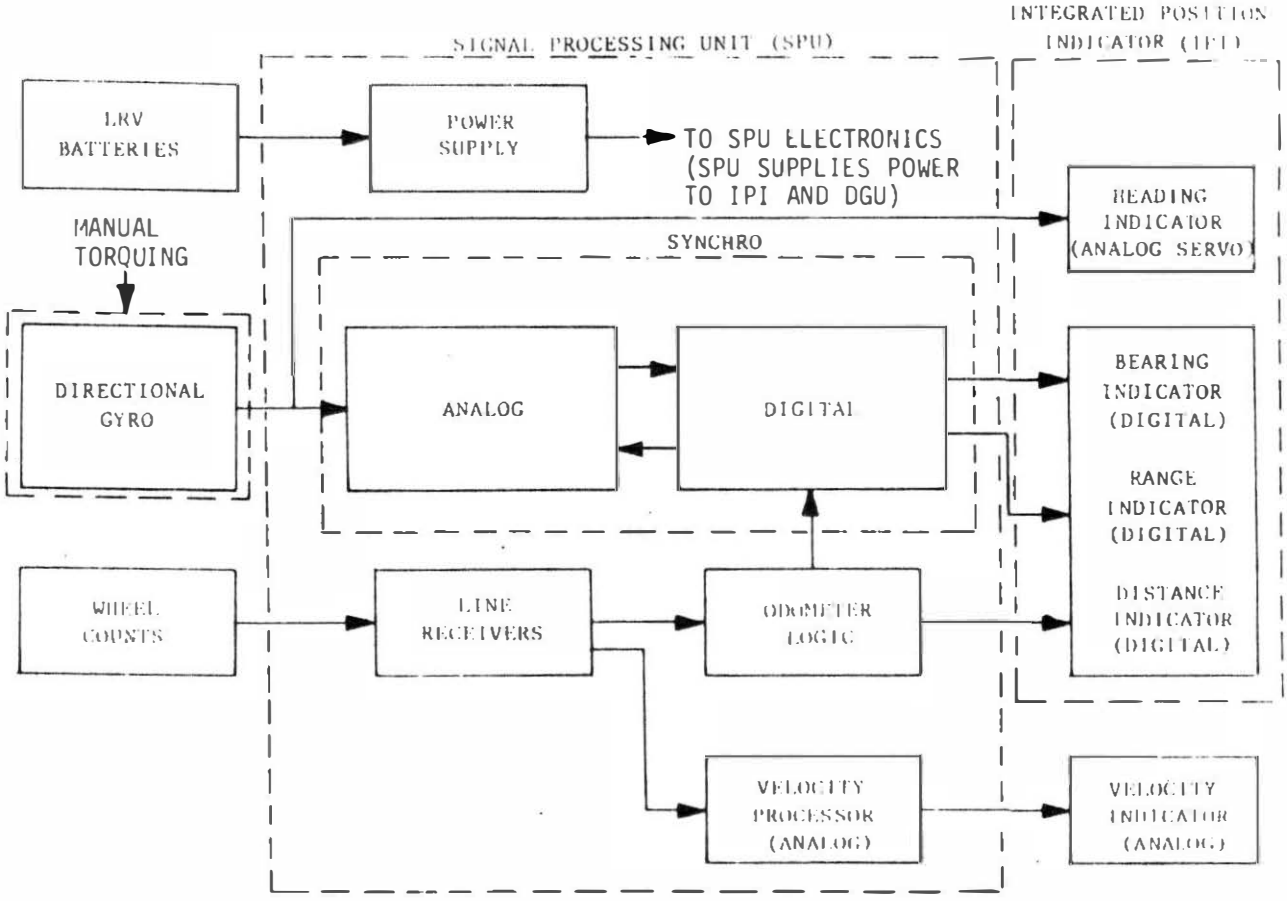

FIGURE 1-23. NAVIGATION SUBSYSTEM BLOCK DIAGRAM

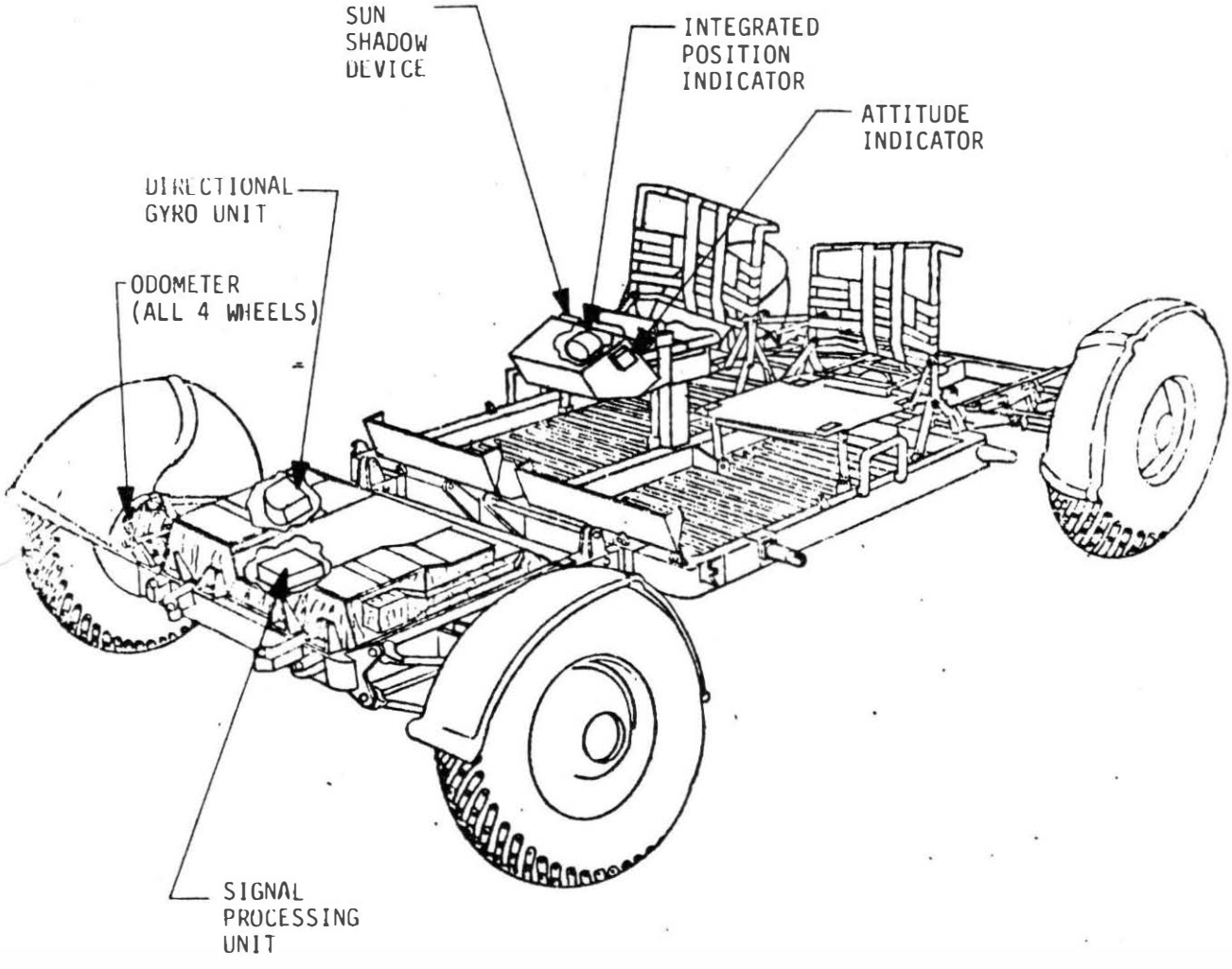

FIGURE 1-24. NAVIGATION COMPONENTS ON LRV

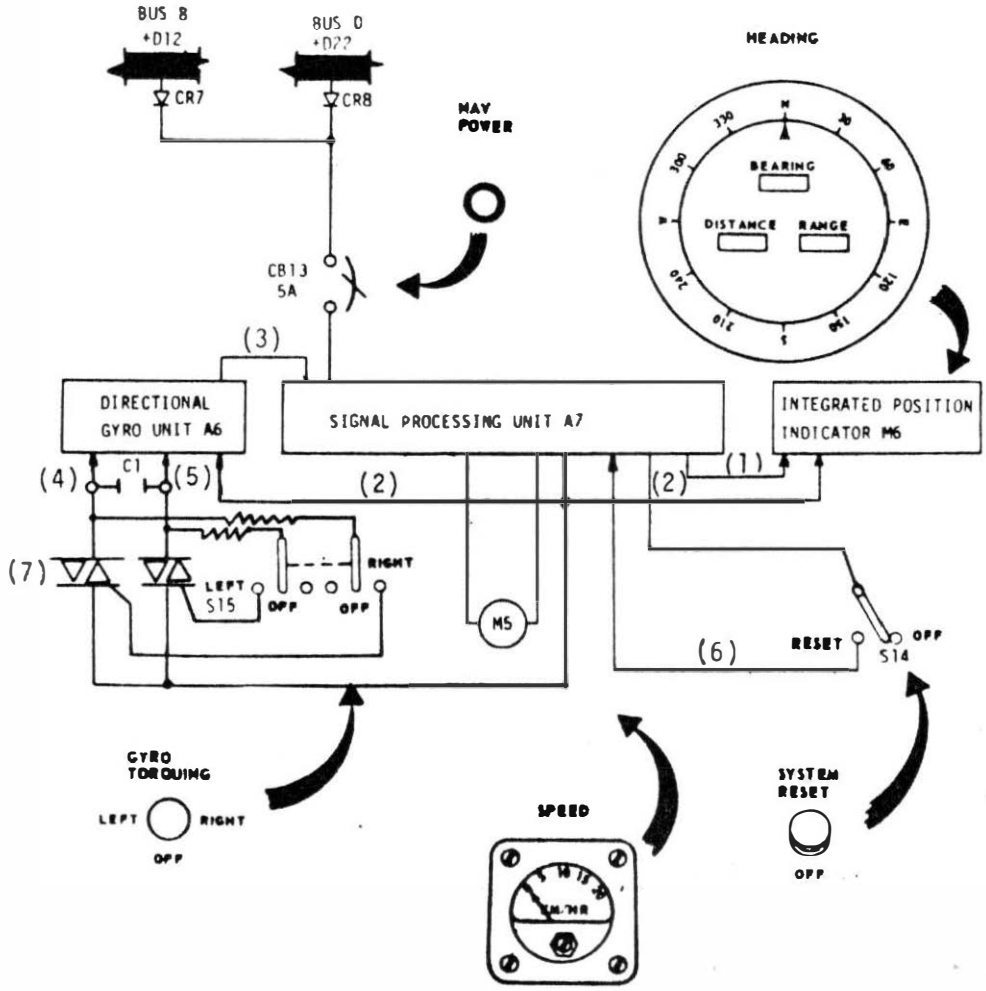

LEGEND

1. 3 WIRE SYNCHRO POSITIONING SIGNAL AND 3 WIRES TO INCREMENT COUNTERS.
2. 400 Hz ELECTRICAL POWER.
3. POSITION SYNCHRO OUTPUT FROM GYRO.
4. TORQUE RIGHT INPUT SIGNAL.
5. TORQUE LEFT INPUT SIGNAL.
6. DIGITAL DISPLAY RESET SIGNAL.
7. SYMBOL INDICATES "TRIAC" (BI-DIRECTIONAL TRIODE THYRISTOR).

FIGURE 1-25 NAVIGATION SYSTEM ELECTRICAL SCHEMATIC

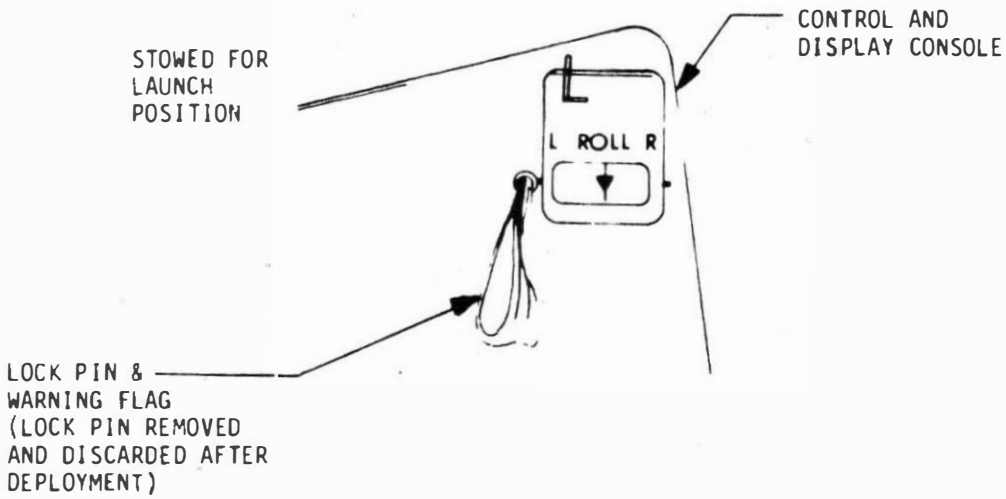

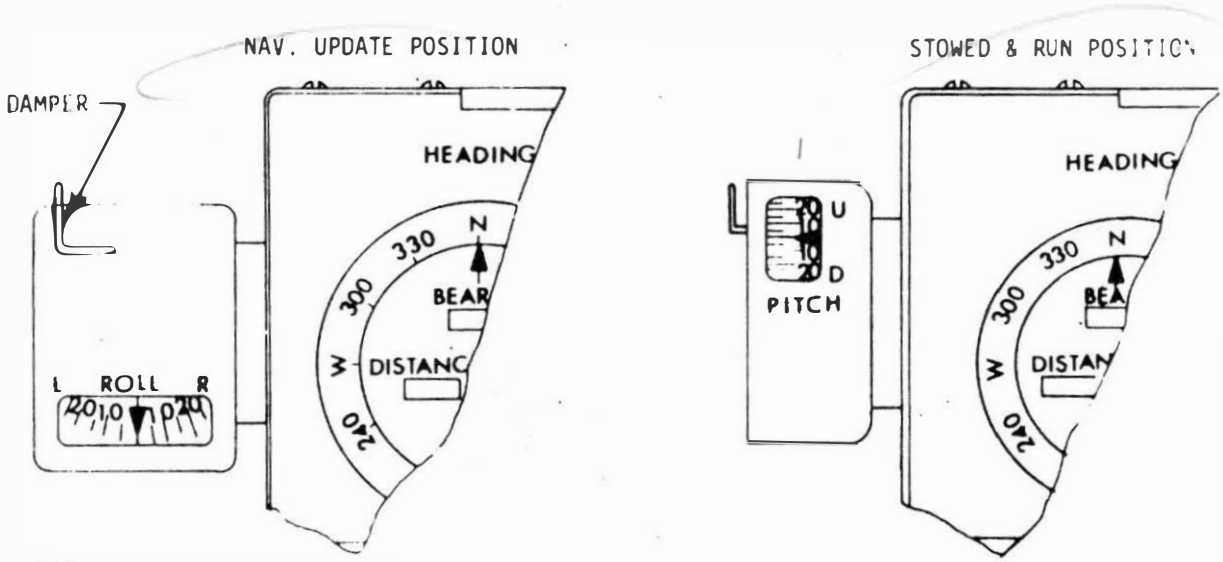

NOTES

1. POINTER MOVES, SCALE IS FIXED
2. NOMENCLATURE ON CASE EXTERIOR IS NOT ACTIVATED WITH RADIOLUMINESCENT MATERIAL

FIGURE 1-26 VEHICLE ATTITUDE INDICATOR

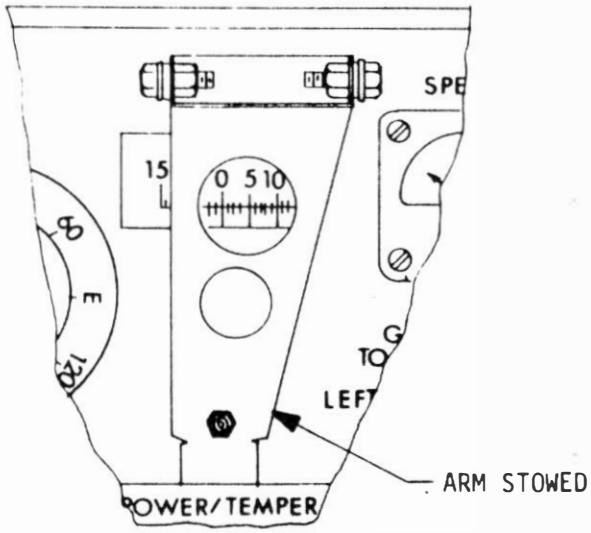

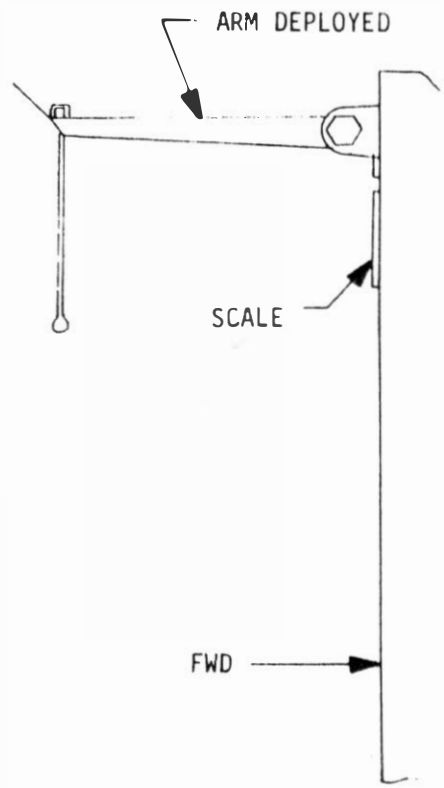

SIDE VIEW

FIGURE 1-27 SUN SHADOW DEVICE

1G Trainer Note

The 1G Trainer navigation system is calibrated for use with the wire wheels, however, the navigation errors incurred when pneumatic tires are used are small. This is because the effective radius of both types of wheels are approximately the same, (pneumatic tires inflated to 30 psig) and the pneumatic wheel has essentially no slip. The only error incurred is in the range and distance calculation. The distance display when pneumatic wheels are used is estimated to be about 3.5% low. The ability to navigate back to the starting point during training should not be affected as all other errors cancel on a closed course.

Odometer pulses from all four wheels enter the odometer logic via the SPU line receivers. This logic selects the third fastest wheel for use in the distance computation. This insures that the odometer output pulses will not be based on a wheel which is locked, nor will they be based on a wheel that has excessive slip.

NOTE

Loss of Nav information occurs if vehicle is operated with more than one traction drive shut off.

The odometer logic sends outputs to the digital distance indicator in the IPI and to the range/bearing processor in the SPU. Upon entering the range/bearing processor, the outputs initiate selection, and conversion of heading, sine and cosine to digital numbers.

The effect of conversion of heading, sine and cosine, at distance increments is equivalent to entering (distance increment x sine heading) and (distance increment x cosine heading) into the ΔE and ΔN registers of the digital part of the bearing and range processor. The digital processor then adds the new ΔE and ΔN numbers to the contents of the East (E) and North (N) accumulators. The E and N accumulators, therefore, contain the east and north vector components of the range and bearing back to the LM. The digital vectoring process then does a vector conversion on the N and E numbers to obtain range and bearing, which are displayed on digital counters in the IPI. Each distance increment from the odometer logic initiates the entire sequence described, and results in the updating of bearing and range.

NOTE

The bearing digital display is "locked out" (i.e. does not display updated readings) until the vehicle is driven beyond a 50 meter radius of the nav initialization point.

1.7 CREW STATION

The crew station consists of seats, footrests, inboard handholds, outboard handholds, arm rest, floor panels, seat belts, fenders, and toeholds.

1.7.1 Seats

LRV seats are tubular aluminum frames spanned by nylon (figure 1-28). The seats are folded flat onto the center chassis for launch and erected to the operational position by the crew after LRV deployment on the lunar surface. The seat back is used to support and restrain the PLSS from lateral motion when the crew is positioned for LRV operation. Refer to Section 2 for seat erection sequence. The seat bottom contains a cutout to allow access to the PLSS flow control valves and includes provisions for vertical support of the PLSS.

1G Trainer Note

The 1G Trainer is also equipped with removable seat pads which allow comfortable operation in a "shirt sleeve" training session.

1.7.2 Footrests

For launch, the footrests (figure 1-28) are stowed against the center chassis floor and secured by two velcro straps. The footrests are deployed by the crew on the lunar surface. The footrests are adjusted, before launch, to accommodate specific crewmen.

1.7.3 Inboard Handholds

Inboard handholds (figure 1-28) are constructed of 1 inch O. D. aluminum tubing and are used to aid the crew during ingress and egress. The handholds also contain payload attach receptacles for the 16 mm data acquisition camera and the LCRU low gain antenna.

1.7.4 Outboard Handholds

Outboard handholds are integral parts of the chassis (figure 1-28) and are used to provide crew confort and stability when seated on the LRV and for attachment of the seat belt.

1.7.5 Arm Rest

The arm rest (figure 1-28) is used to support the arm of crewmen during hand controller manipulation.

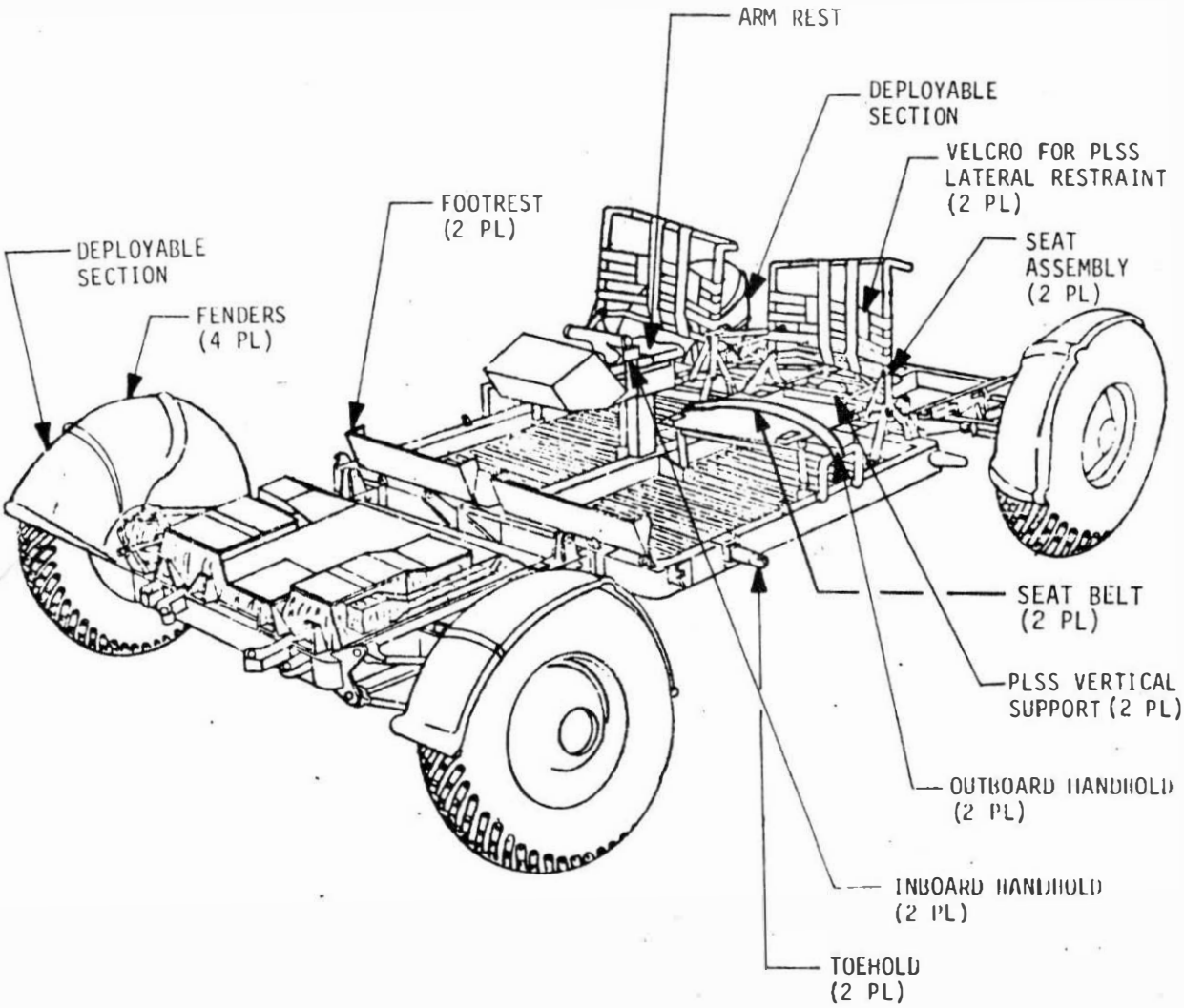

FIGURE 1-28 CREW STATION COMPONENTS